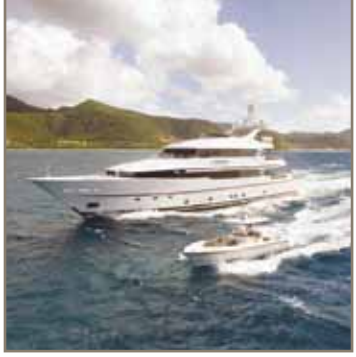

aerospace
climate control
electromechanical
filtration
fluid & gas handling
hydraulics
pneumatics
process control
sealing & shielding

7480H Product Catalog

Fuel, Oil, Air, CCV, Hydrocarbon, and Pump Filtration, Additives, and Watermakers

Parker | Racor

ENGINEERING YOUR SUCCESS.

WARNING - USER RESPONSIBILITY

FAILURE OR IMPROPER SELECTION OR IMPROPER USE OF THE PRODUCTS DESCRIBED HEREIN OR RELATED ITEMS CAN CAUSE DEATH, PERSONAL INJURY AND PROPERTY DAMAGE.

This document and other information from Parker-Hannifin Corporation, its subsidiaries and authorized distributors provide product or system options for further investigation by users having technical expertise.

The user, through its own analysis and testing, is solely responsible for making the final selection of the system and components and assuring that all performance, endurance, maintenance, safety and warning requirements of the application are met. The user must analyze all aspects of the application, follow applicable industry standards, and follow the information concerning the product in the current product catalog and in any other materials provided from Parker or its subsidiaries or authorized distributors.

To the extent that Parker or its subsidiaries or authorized distributors provide component or system options based upon data or specifications provided by the user, the user is responsible for determining that such data and specifications are suitable and sufficient for all applications and reasonably foreseeable uses of the components or systems.

OFFER OF SALE

The items described in this document are hereby offered for sale by Parker-Hannifin Corporation, its subsidiaries or its authorized distributor. This offer and its acceptance are governed by the provisions stated in the detailed "Offer of Sale."

Table of Contents

Introduction:

General Information II
Biodiesel X
Air Separation XIII
Micron Rating XV

Section A: Mobile Fuel Filtration A1
Section B: Marine Fuel Filtration B1
Section C: Watermakers C1
Section D: Alternative Fuel D1
Section E: Hydrocarbon Filtration E1
Section F: Air Filtration F1
Section G: Crankcase Filtration G1
Section H: Lubrication Filtration H1
Section I: Transmission Filtration I1
Section J: Additives J1
Section K: Sentinel Systems K1
Section L: Heaters L1
Section M: Hydraulic Filtration M1
Section N: Contamination Detection Systems N1
Part Number Index O1
Section P: Warranty / Offer of Sale P1

Fuel Filtration Technology

It is quite common to find diesel engines equipped with at least a basic fuel filtration device. Yet, in the face of a general worldwide decline in the quality of diesel fuel itself, basic forms of filtration may not adequately protect precision components.

No matter how carefully fuel is handled, contaminants will find their way into fuel during transfer, storage, or even inside vehicle tanks. Indeed, water, an engine's number one enemy, condenses directly from the air during normal daily heating and cooling cycles. In addition to water, solid and semi-solid (microbiological) particulate contamination is prevalent.

In addition to contaminant challenges there is also the potential for paraffin wax crystal formation in the fuel during cold weather operations. These crystals form (at the cloud point of fuel) and cause filters to plug just as if they were fouled by contamination.

Each of these threats to smooth engine operation can be met by a well designed, high quality, and effective diesel fuel filter/water separator. The proper system can go a long way in assisting operators with required operation and maintenance.

Water, An Engine's Worst Enemy

Water is commonly found in diesel fuel, due mainly to condensation, handling, and environmental conditions. Water contamination, although ever present, is more pronounced in humid areas and marine applications.

The presence of water in diesel fuel systems may cause the following problems:

- **Water causes iron components to rust, forming loose aggregated particles of iron oxide contributing to injector wear.**
- **At the interface of water and diesel fuel, microbiological growth rapidly occurs under ideal conditions. These microbes form a sludge that can actually hinder filter effectiveness and injection performance.**
- **Water contamination combines with various forms of sulfur contamination, forming sulfuric acid. This strong acid can damage injection systems and engine components.**
- **Water inhaled by the injection system can displace lubrication provided by the fuel oil itself, causing galling and premature wear.**

Typical primary filtration devices do not have the capability to remove water, leaving the engine prey to pump and injector damage and reduced efficiency. It is therefore essential to effectively separate water from the fuel prior to the final stages of solid particulate filtration.

Magnified Sediment

Solid & Semi-Solid Contamination

Rust, sand, and other small particles routinely find their way into diesel fuel. Sometimes larger identifiable objects such as pebbles, leaves, and paint chips are also present.

The most common culprit of plugged fuel filter elements are oxidized organic semi-solid contaminants such as gums, varnishes, and carbon. To be effective, fuel filtration devices must provide adequate solid particle retention efficiencies while also maintaining large capacities for the natural organic contaminants found in diesel fuel.

Cold Weather Operation

The properties of diesel fuel and its contaminants, especially water, may be drastically altered in cold weather. Depending upon the quality of the diesel fuel, its cloud point (the point at which paraffin crystals precipitate) may be 0ºF to 45ºF (-17ºC to 7.2ºC).

Paraffin crystals (which are found in most diesel fuels) quickly coat filter elements and prevent fuel flow and vehicle operation. In addition, water contamination in the form of icy slush compounds the problem, slowing fuel flow even more quickly. It is therefore desirable to heat diesel fuel as close to the filter element as possible, to re-liquefy wax and ice crystals.

Fuel Filtration Technology (continued)

Effective Specifying: The Right Racor for the Job

The many influences involved in specifying a diesel fuel filter/water separator include the original engine manufacturer, engine packager, maintenance director and superintendent of a fleet, or the owner/operator.

There are several possible strategies that may be pursued in applying filter/water separators and heaters. Each is dependent on the demands of the fuel environment, the type of original equipment already on the engine, and the perceived needs of the equipment operator. Some of the more common situations encountered are listed as follows:

1. **Add water separation capability to an existing standard filter system.**

   In the absence of a water separator, standard primary elements become water-logged and ineffective. When water-logged, they are especially susceptible to waxing in cold temperatures. An 'upstream' water separator will significantly enhance the performance and life of primary filter elements. The 6000 Series illustrates such a device.

2. **Add water separation and filtration capacity to an existing system.**

   Frequent replacement of primary filters is required when the volume of contaminants is significant. In such cases, engine damage may result because filters are not immediately available for replacement, or operators are not aware of the need to replace. Therefore, adding upstream filtration capacity and water separation capability and a 30 micron rating can, when properly applied, as much as triple the filtration system service life.

   Racor Turbine Series filter/separators illustrates a product viable for high flow rate applications. The 320 Spin-on Series units provide like benefits, but for engines with flow rates below 45 GPH (170 LPH).

3. **Add water separation, higher filtration efficiency and capacity to the existing standard filtration device.**

   Similar to the preceding example but with fine filtration to as small as 2 microns, provides virtually 100% removal of contamination. A recommended strategy would be a Turbine Series fuel filter/water separator to remove virtually all water and most solid contamination (using a 2 micron final stage filter element).

4. **Add a diesel heater to the fuel system.**

   There are several methods used to heat diesel fuel to maintain operation in cold weather. The following are the most common:

   Electric Heaters-either built in to the diesel fuel filter/water separator or a separate in-line unit.

   Coolant Heaters - either built in to the diesel fuel filter/water separator or a separate in-line unit.

   For most low flow applications (under 0.5 GPM /1.89 LPM) an efficient 150-200 watt, thermostatically controlled, electrical heater will economically provide immediate heat and maintain equipment operation.

   For higher flow applications the problem is more challenging. To assure cold condition operation, a large amount of energy is required (example, 1.5 GPM flow for a Cummins 350 to maintain operation). Several options are available:

   - ***an efficient 350-500 watt electrical heater, or***
   - ***a 150-300 watt start-up heater in conjunction with a coolant heater, or***
   - ***a combination coolant heater with an electrical heater.***

   These options will prevent paraffin crystals from coating the filter medium and assist in providing diesel fuel flow to the injection system in most cold weather conditions. In extreme cold conditions (-60ºF / -76ºC) additional measures are required.

Details of the Application

After initial decisions are made about the type of filter/water separator and/or heater required, it is important to study the details of the application more specifically to find the system most closely suited.

1. **Physical package size and location determine specifically where the filter/water separator can be mounted and how large it can be. This space must also include a provision for service.**

   Determining environmental parameters (maximum and minimum temperatures, vibration, hose diameter, length, housing pressure, restriction, and types of fittings) helps identify some of the many possible filter/separator options.

2. **Given that one has determined the overall type of filter/separator (i.e., suction or pressure side/unit and primary or secondary type filter), determine what the maximum fuel flow rate will be. For example, each Racor filter/separator is rated for flow rates where maximum flow and minimum restriction can be achieved while maintaining maximum contaminant removal efficiency and capacity.**

3. **Determine what micron rating would be appropriate for the application. For primary filters where increased capacity and life is desired, the filter medium should be matched to the secondary filter medium to maximize contaminant holding capacity. Usually 20, 30 or 40 micron filters are applied. Secondary filters should be chosen depending on the sensitivity of the particular injection system they are protecting. The most damaging particles are usually 5 to 15 microns in size. Racor secondary filters are rated at 2 or 10 microns in single pass particle retention efficiency.**

Summary

1. **Fuel filter water separators face many challenging conditions from the varied environments in which they must operate.**
2. **Each filter separator system should be carefully tailored to specific equipment/contamination problems and close attention must be devoted to system maintenance.**
3. **Factors such as size, mounting location, and environmental parameters greatly narrow the possible filter separator alternatives when choosing a system for a particular application.**
4. **Specific information such as system flow rate, desired micron rating, filter capacity, anticipated housing pressure, acceptable restriction, and customer needs help further define the choice of filter separators.**
5. **As time progresses more original equipment manufacturers are specifying fuel filter/water separators on their diesel engines. Most are requiring units with heaters, water sensors, and element change indicators. These requests reflect growing concern and recognition on the part of diesel users that there are serious contamination problems in today's diesel fuel, confirming our belief that increasing demands for engine protection will continue.**

Port Sizes

Introduction

Today many different types of connectors are being used around the world. Most of these have come about through historical use and local preference for a certain design concept. Some connections of North American origin such as SAE straight thread and 37º flare, have found some degree of acceptance and use in Europe and Japan as a result of exports of U.S. machinery to these regions after World War II. However, a large majority of usage is made up of a variety of indigenous port and fitting connections. A quick review of the commonly used connections around the world reveals eight different port configurations.

Fortunately, the International Standards Organization (ISO) Technical Committee 131 (ISO/TC131) has developed standards for the most widely used ports and connectors to limit proliferation. The result is five port designs and Racor offers the four most popular, listed below:

Standard Fuel Ports

Racor's standard port configuration is the SAE J1926 (ISO 11926-1) design for straight thread with O-ring seal. This design sandwiches and compresses an O-ring between the angular sealing surface of the female port and the shoulder of the male end.

Also available is SAE J476, Dryseal American standard taper pipe thread. Racor provides this port in the NPTF (dryseal) configuration. In this design, the male/female thread crest and roots contact and then flatten allowing the flanks to make full contact. Thread sealants are recommended with this design.

Metric Fuel Ports

Available for a European or export market is the new 'world standard' ISO6149 (SAE J2244, DIN 3852-3) metric straight thread O-ring port, which is similar in the seal design to the SAE J1926 version above.
For Germany and other applications, the ISO 9974 (DIN 3852-1) configuration is available for sealing on the port surface or 'spot-face.' In this design, a captive seal is compressed against a smooth flat radial surface on the mating part.

Parker/Racor Connector Fittings

Racor primarily offers the JIC 37º flared fitting design because it can be used to connect to inch tubing, metric tubing and hose assemblies. This versatility offers customers a greater international acceptance as compared to other fitting styles.

The standard rubber seals and O-rings used in Parker fittings are 90 durometer hard, low-swell buna-nitrile (NBR), which meets or exceeds Parker specification #N0552. This compound is suitable for use with all grades of diesel, gasoline, synthetic or petroleum based engine oils, and natural gas (CNG) applications. Typical temperature range is -30º to 225ºF (-34º to 107ºC). Note: not recommended for use with phosphate ester base hydraulic fluids, automotive brake fluids, strong acids, ozone, freons, ketones, halogenated hydrocarbons, and methanol.

The ports shown on the next page are the thread styles that Racor produces. The most common threads are from top-left to bottom-right.

	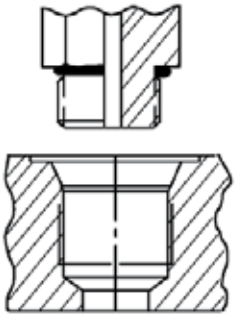	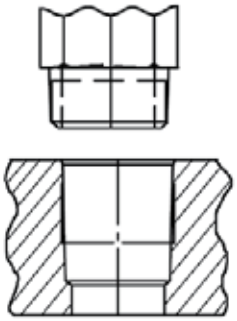	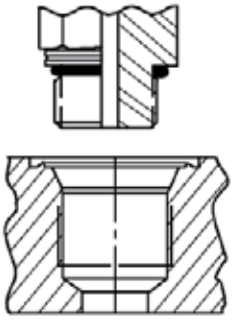
Port Description	**SAE Straight Thread O-ring Port**	**NPTF - Dryseal American Standard Taper Pipe**	**Metric Straight Thread O-ring Port**
Thread Type	ISO 263 ANSI B1.1, Unified	ANSI B1.20.3	ISO 261 Metric Fine
ISO Number	11926	N/A	6149
SAE Number	J1926	J476	J2244
DIN Number	N/A	N/A	3852-3 Form "W"
Current Use	Widely used in North America. Limited use in rest of the world.	Mainly used in North America with some use in the rest of the world.	Gaining use in U.S. and western Europe. Widely used in former Soviet block countries.

	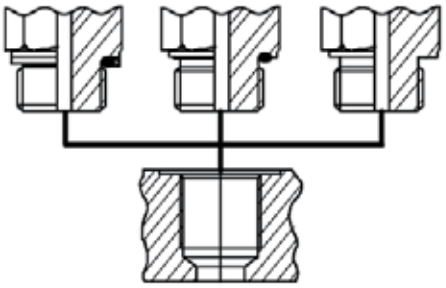	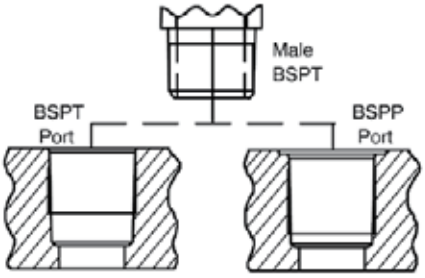
Port Description	**Metric Straight Thread Flat Face Port**	**BSPT/JIS British Standard Taper Pipe**
Thread Type	ISO 261 Metric Fine	ISO 7 BS 21 JIS B203
ISO Number	9974	N/A
SAE Number	N/A	N/A
DIN Number	3852-1 Form X or Y	Similar to: 3852-2 Form Z
Current Use	Moderate use in Europe, mainly used in Germany.	Mainly used in Japan and parts of western Europe.

Port Types

Introduction

Today many different types of connectors are being used around the world. Most of these have come about through historical use and local preference for a certain design concept. Some connections of North American origin such as SAE straight thread and 37º flare, have found some degree of acceptance and usein Europe and Japan as a result of exports of U.S. machinery to these regions after World War II. However, a large majority of usage is made up of a variety of indigenous port and fitting connections. A quick review of the commonly used connections around the world reveals eight different port configurations. Fortunately, the International Standards Organization (ISO) Technical Committee 131 (ISO/TC131) has developed standards for the most widely used ports and connectors to limit proliferation. The result is five port designs and Racor offers the four most popular, listed below:

Standard Fuel Ports

Racor's standard port configuration is the SAE J1926 (ISO 11926-1) design for straight thread with O-ring seal. This design sandwiches and compresses an O-ring between the angular sealing surface of the female port and the shoulder of the male end. Also available is SAE J476, Dryseal American standard taper pipe thread. Racor provides this port in the NPTF (dryseal) configuration. In this design, the male/female thread crest and roots contact and then flatten allowing the flanks to make full contact. Thread sealants are recommended with this design.

Available for a European or export market is the new 'world standard' ISO6149 (SAE J2244, DIN 3852-3) metric straight thread O-ring port, which is similar in the seal design to the SAE J1926 version above. For Germany and other applications, the ISO 9974 (DIN 3852-1) configuration is available for sealing on the port surface or 'spot-face.' In this design, a captive seal is compressed against a smooth flat radial surface on the mating part.

Parker/Racor Connector Fittings

Racor primarily offers the JIC 37º flared fitting design because it can be used to connect to inch tubing, metric tubing and hose assemblies. This versatility offers customers a greater international acceptance as compared to other fitting styles.

The standard rubber seals and O-rings used in Parker fittings are 90 durometer hard, low-swell buna-nitrile (NBR), which meets or exceeds Parker specification #N0552. This compound is suitable for use with all grades of diesel, gasoline, synthetic or petroleum based engine oils, and natural gas (CNG) applications. Typical temperature range is -30º to 225ºF (-34º to 107ºC). Note: not recommended for use with phosphate ester base hydraulic fluids, automotive brake fluids, strong acids, ozone, freons, ketones, halogenated hydrocarbons, and methanol.

The ports shown on the next page are the thread styles that Racor produces. The most common threads are from top-left to bottom-right.

	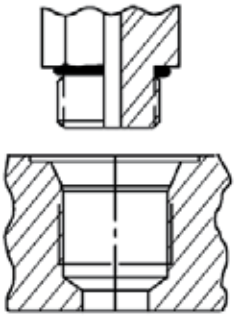	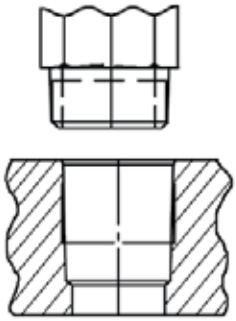	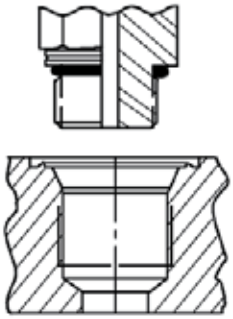
Port Description	**SAE Straight Thread O-ring Port**	**NPTF - Dryseal American Standard Taper Pipe**	**Metric Straight Thread O-ring Port**
Thread Type	ISO 263 ANSI B1.1, Unified	ANSI B1.20.3	ISO 261 Metric Fine
ISO Number	11926	N/A	6149
SAE Number	J1926	J476	J2244
DIN Number	N/A	N/A	3852-3 Form "W"
Current Use	Widely used in North America. Limited use in rest of the world.	Mainly used in North America with some use in the rest of the world.	Gaining use in U.S. and western Europe. Widely used in former Soviet block countries.

	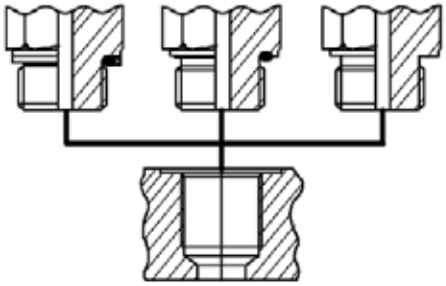	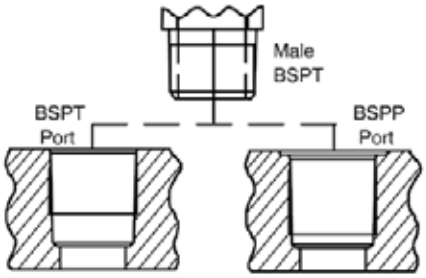
Port Description	**Metric Straight Thread Flat Face Port**	**BSPT/JIS British Standard Taper Pipe**
Thread Type	ISO 261 Metric Fine	ISO 7 BS 21 JIS B203
ISO Number	9974	N/A
SAE Number	N/A	N/A
DIN Number	3852-1 Form X or Y	Similar to: 3852-2 Form Z
Current Use	Moderate use in Europe, mainly used in Germany.	Mainly used in Japan and parts of western Europe.

Introduction to Biodiesel

Renewable Fuels

Biodiesel is a diesel fuel produced by chemical refining of vegetable oils into "fatty acid methyl esters," or FAME. Glycerin is removed in the refining process, lowering oil viscosity to match diesel fuel. Pure biodiesel is most often added to diesel fuel in a 2, 5, or 20% blend, and referred to as B2, B5, or B20 respectively.

Other renewable "biofuels" are raw oils or recycled greases that have not been transformed into biodiesel. These products require extra heat, filtration, and other vehicle modifications to burn in diesel engines.

Challenges and Solutions

Racor fuel filters and heaters are uniquely suited for filtering and conditioning biodiesel and biofuels for use in diesel engines.

Biodiesel tends to dissolve natural fuel "tar" deposit coating the inside of diesel tanks, piping, and hoses. Dissolved deposits are carried to fuel filters, causing shortened fuel filter life. Most biodiesels have a low "interfacial tension." This means that water easily disperses and dissolves in fuel. Low interfacial tension greatly reduces water separation efficiency for all types of water separators and coalescers. Removal of water from a fuel system is necessary for proper engine performance.

Racor recommends using the largest filter practical for the application. A larger filter adds more filtration media surface area, which lowers flow velocity going to each square inch of media. This extends filter life and increases water removal efficiency. When specifying a new biodiesel fuel system, de-rate fuel filter flow by 50% and install on the vacuum (suction) side of any pumps, where possible.

Pure biodiesel has high cloud and pour points, necessitating the use of electric and/or coolant heaters in cold weather. Higher percentage blends (B20) act more like standard diesel fuel, but some lower fuel blends have been known to cause problems. Other biofuels of raw oil or recycled grease have high viscosity as well as cloud and pour points, and must be heated to high temperatures to be used.

Racor recommends using at least 200 watts of thermostatically controlled electric heating in the head and/or filter bowl to help avoid biofuel waxing and gelling. Pour point suppressants and biocides are necessary for reliable operation. A coolant heat exchanger is required to heat fuel in extreme cold weather conditions.

Biodiesel is known to attack certain synthetic rubber compounds, making them swell and soften, or shrink and harden. Racor uses very high quality synthetic rubber compounds that perform equally well in biodiesel as in standard diesel. Seals subject to biodiesel exposure are generally replaced at the same time as replacement filters. Racor uses all materials compatible with up to 20% biodiesel blend. Above 20% may require material changes to dynamic seals that are not normally replaced at filter change-outs.

Engineering Leadership

Racor has participated in several biodiesel filtration field tests with major OEMs. We are actively participating in industry wide research and development on biodiesel fuel filtration and water separation challenges. Development of technology to support the use of all biofuels is on-going.

Biodiesel and Biofuel Filtration

Specify The Following:

- **Large primary and secondary filters at 50% of their rated flow.**
- **High quality, corrosion resistant materials in construction.**
- **High quality, synthetic rubber compounds for seals and hoses.**
- **Efficient coolant and/or electric heating.**
- **Fuel source with high efficiency fuel dispensing.**

Fuel Filtration Systems

Recommended for Biodiesel and Biofuels

Fuel Dispensing	Electric Heated Primary Filtration	Coolant Heated Primary Filtration	Electric Heated Secondary Filtration	Coolant and Electric Heaters
FBO	6120R1230	390RC1230	690R122	320HTR4
RVFS/RVMF	1000FH1230	525	6120R122	Nomad 14287

Notes: Marine rated versions are available-consult factory. Also available-Thermoline Heaters, 300 and 500 watt, 12 and 24 volt.

Questions? Contact Technical Support:
800 344 3286 or 209 521 7860 ext. 7555
e-mail: racortech@parker.com

Parker Racor

Introduction to Ethanol

Parker Racor Filtration Tackles the Affects of Ethanol in Gasoline Fuels

Corn

Ethanol is a clean-burning, high-octane fuel that is produced from renewable sources, crops such as corn and sugar cane. Because it is domestically produced, ethanol helps reduce America's dependence upon foreign sources of energy. Pure, 100% ethanol is not generally used as a motor fuel instead, a percentage of ethanol is combined with unleaded gasoline.

Benefits of Ethanol:

- **Decreases the fuel's cost.**
- **Increases the fuel's octane rating**
- **Decreases gasoline's harmful emissions.**
- **E10 Ethanol contains 10% ethanol, and 90% unleaded gasoline.**

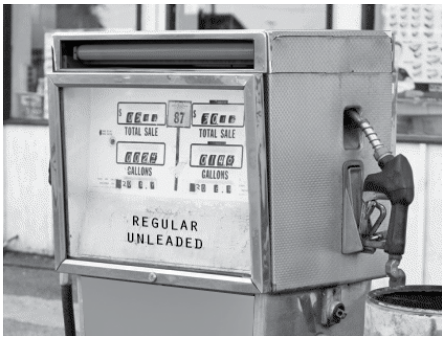

Gasoline

Racor is pleased to remind the boating public that their family of existing gasoline filtration products have been designed to handle the effects of ethanol blended fuels. Since 1969 Racor, the original supplier of fuel filter/water separators, now with advanced engineered Aquabloc®II filtration media, has been protecting engines and fuel systems from the ravages or water and contamination. This season many boaters have discovered the benefits of superior filtration and separation by using Racor products on their inboard and outboard gasoline engine powered

vessels. The choice of global OEMs, Racor is also the choice of smart boaters concerned about safety, quality, and performance.

"Now more than ever, engines require high performance and high technology fuel filtration particularly when using ethanol blended gasoline fuels", according to Steve Hardison, Racor Fuel Filtration Product Manager.

One effect of ethanol blended fuel is fuel tank and fuel system component "cleansing" resulting in more contaminates in the fuel stream.

Racor filters trap particles in their Aquabloc®II media which also repels the damaging water into the drainable collection bowl. For more information on ethanol fuels in marine applications please refer to the National Marine Manufacturers Association (NMMA) or the EPA web sites.

Award-winning Racor designs are available for any engine, any fuel, and at any flow rate. Please visit www.parker/racor.com for details.

Genuine Aquabloc®

Every time you squeeze the trigger, you threaten your engine's life.

No matter how carefully gasoline is handled or stored, dirt, rust, gums, algae, and water are going to find their way in, and just a few drops can leave you dead in the water. Racor gasoline fuel filter/water separators with Aquabloc®II media remove virtually 100% of damaging water and solids, allowing engines to run with more power and greater efficiency. Install a Racor mounting head or spin directly onto your existing filter head to protect your engine and improve its performance. Spin on a Racor fuel filter/water separator, for the life of your engine.

The Phenomena of Air Separation

Fact #1: There is AIR entrained in diesel fuel.

Fact #2: A very slight pressure drop can cause air to form visible bubbles.

Fact #3: Air can cause problems.

Fact #4: Air entrained in diesel fuel is not the same as diesel fuel vapor.

Fact #5: Air, once freed from fuel, will not go back into solution. Fuel vapor, however, CAN go back into solution (solid fuel).

The Problem

When fuel is in storage and quiescent, air is not visible. Depending on how much air is present in molecular form, more or less will separate from fuel as it moves through any torturous path, such as a fuel filter, and collects in any high point in its path.

If this collection point is above the outlet of the filter, the air will collect until the bubble is large enough to reach down to the outlet. The air will begin to extend beyond the outlet orifice due to its surface tension until forces are great enough to break part of the air bubble free. It then passes into the outlet line as a significant size bubble.

In the past, the average size engine never noticed air bubbles passing through its injection system because the absence of solid fuel was of such a short duration, the kinetic forces kept the engine running while missing a few power strokes until solid fuel reentered the injection system. In the vocabulary of diesel fuel injection engineering there is a term called IEB (Interrupted Exhaust Beat). One cause of IEB is air bubbles passing into the fuel injection system; other causes are not relevant here.

For small engines, the problem will often result in an engine shutdown, because the amount of fuel for each injection is so small that the air bubble lasts during too many injections and the engine will stall before solid fuel reenters the system.

With the advent of electronic controls, the problem can become even greater. In some of those systems, the air bubble may be sensed as “fuel exhaustion” and the engine goes into shutdown mode.

Many smaller engines, however, use rotary distributor type fuel injection pumps and these, due to their design, can often handle the incoming air bubble. The air escapes into the governor cavity before being metered to the high pressure pumping plungers.

The Solution

The simplest and best solution is to use a filter head that has the outlet line exiting directly from the top, with no place for air bubbles to collect. In this solution, air is not stopped from coming out of fuel, but as each minute bubble forms, or coalesces on the downstream side of the filter media and passes to the top side of the element, it will pass out of the filter as a very tiny bubble. These bubbles seen in clear tubing may appear in a minuscule stream as champagne type gas bubbles.

Note: fuel lines leading to the injection system must not have any areas where air can collect or the solution will be defeated.

Racor has two filter assemblies available that will solve the problem. The 600 Series has an outlet directly on top that, when connected with an orifice fitting, will send any air directly to the return system. An air vent must be fitted with an orifice between 0.020 to 0.040 inches (0.5 to 1.0 mm). This filter series is available in four sizes and can handle flow rates up to 120 GPH (454 LPH).

Models 325 and 330 provide a location for an air vent fitting that is designed to do the same thing. The air vent must be fitted with an orifice as mentioned above. These models will handle flow rates up to 75 GPH (284 LPH).

If it is not convenient to change to a different filter head, another solution is to provide a tee fitting in the outlet or outlet line with one of the tee’s ports aiming straight up and connected to a line leading to the return system. This air venting port of the tee fitting must be fitted with an orifice as mentioned above.

The Phenomena of Air Separation (continued)

Simple Illustration of the Phenomena

Many years ago this writer was challenged by two separate customers on two different occasions to prove that a filter from which they could see air bubbles exiting, did not have leaks allowing air to be drawn into the filter. The demonstration consisted of using an open top 50 gallon drum filled with diesel fuel to submerge the filter in. The filter inlet had no fittings, but was simply exposed to the fuel in which the filter was submerged. The outlet was connected by means of a clear line to the inlet side of an electric fuel pump as planned to be used in the production vehicle. The outlet of the pump was directed to the top of the drum of fuel. After completely filling the test filter with fuel, the filter was turned upside down so that the sediment collection bowl was on the top end of the assembly in the drum of fuel. The prediction that in 20 minutes the fuel filter assembly would float to the top of the drum was met with skepticism. But in about 20 minutes, up it came! The customer's engineers were finally convinced that the bubbles were the result of entrained air being coalesced out of the fuel, and not from leaks.

Some visible bubbles can be the result of fuel going into a vapor. Depending on the fuel temperature, at about 12 inches of mercury, diesel fuel will begin to vaporize and a stream of bubbles may be seen emanating from the point of the lowest negative pressure. Fuel vapor bubbles disappear as soon as the negative pressure is removed or after the fuel is pressurized on the pressure side of the transfer pump. The proof that air bubbles are air and not vapor is that they appear when there is very little negative pressure involved. They also do not disappear after being pressurized by a lift pump, unless of course the pressure is high enough to compress them beyond the point of visibility (about 50 microns or less).

By David Hodgkins (40 years in diesel fuel system engineering)

The Micron Rating for Fluid Filters

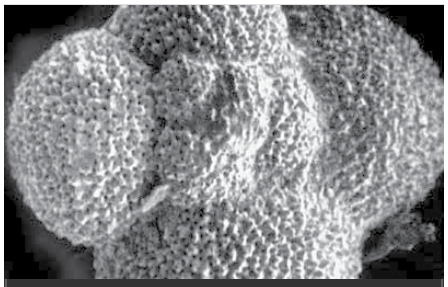

Magnified Sediment Particle

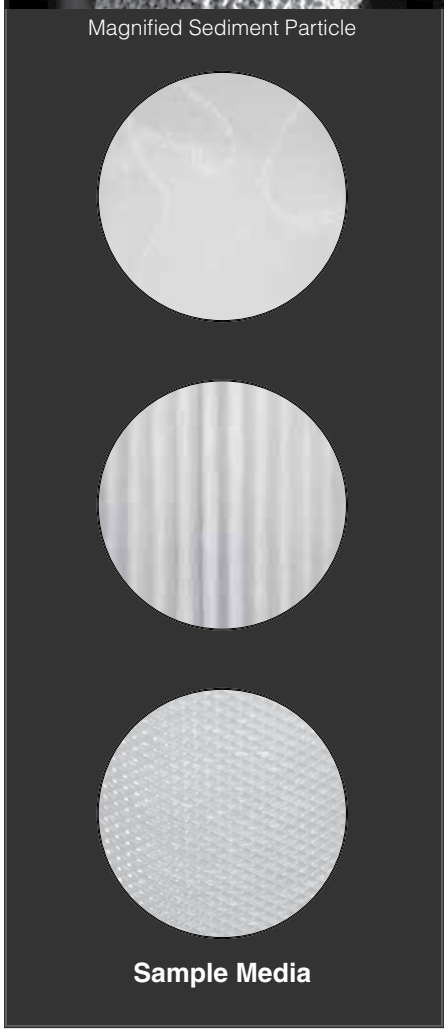

Sample Media

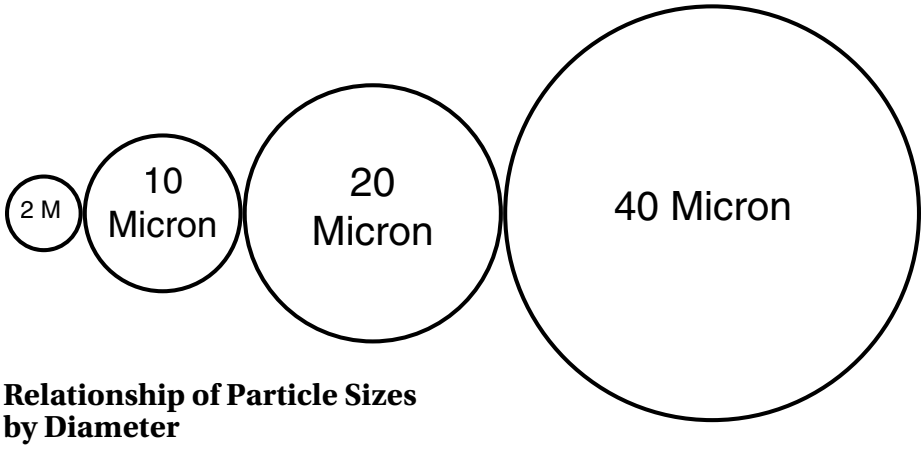

Relationship of Particle Sizes by Diameter

1 Micron = 1 Millionth of a Meter.
1 Micron = 1 Thousandth of a Millimeter.
1 Micron = 39 Millionth of an Inch (0.000039).
25.4 Micron = 1 Thousandth of an Inch (0.001).
40 Microns = Visible with Magnification.
40 to 90 Microns = Diameter of a Human Hair.

The 10 micron can be used for primary or secondary/final filtration depending on the engine and/or the application. The 2 micron element is secondary/final filtration.

A micron rating for a fluid filter is a generalized way of indicating the ability of the filter to remove contaminants by the size of the particles. AIR FILTERS ARE NOT RATED BY MICRON SIZE. The micron rating does not properly or fully describe either the efficiency or the contaminant-holding capacity of the filter.

What does the word micron mean? It is a unit of linear measure in the metric system used to measure distance from one point to another. It is used like the inch, foot, centimeter and millimeter to measure the length, width, or diameter of objects.

A filter that is marked "10 microns" has some capability in capturing particles as small as 10 microns. However, there is no one accepted method to measure and describe the size of particles that a filter can capture or the total amount of particles that the filter can hold. When you see the filter marked "10 microns", you will not know exactly what this means unless you also have a description of the test and standards used to determine the filter rating.

Filter micron ratings are often based on one of these methods, but with many possible variations:

A. Nominal Micron Rating (NMR)NMR usually means the filter can capture a given percentage of particles of the stated size. For example, a filter might be said to have a nominal rating of 90% at 10 micron.

B. Absolute Micron Rating (AMR) AMR is a single pass test and is obtained by passing fluid containing glass beads through a flat sheet of filter material. Any beads that pass through are captured and measured.

C. Multi-Pass Beta Rating (MPBR) The MPBR has been accepted by many machinery manufacturers, as well as filter manufacturers (but not used in a public way by most of them to identify or specify their filters), especially for filters used in fluid power applications; hydraulics, controls, trans-missions, power steering and so forth.

Questions? Contact Technical Support:
800 344 3286 or 209 521 7860 ext. 7555
e-mail: racortech@parker.com

The Micron Rating for Fluid Filters (continued)

Single/Multi-Pass tests use contaminant specially graded by particle sizes added regularly in measured quantities to the fluid which is pumped continuously through the filter. Measured samples of fluid are taken at timed intervals upstream and downstream of the filter. The contaminant in these samples is measured for particle sizes and the quantity of each size or ranges of sizes.

Some suggestions:

1. **Use filters of high quality.**
2. **Obtain filters by catalog listing, not just by "micron rating". Other important qualities should also be considered.**
3. **Pay close attention to service intervals and good service practices for best economy of operation.**

Above article used by permission of the Filter Manufacturers Council, Research Triangle Park, NC. Filter Testing (from Racor brochure #7550).

The Diesel Fuel Filtration Industry has a guiding engineering society in every country that manufacturers diesel engines or diesel fuel filters. In the United States, this is known as the SAE (Society of Automotive Engineers); in Europe, it is the ISO (International Standards Organization). Each society publishes test method procedures for: Filtration Efficiency, Filter Capacity or Life, Media Migration, and Water Separation.

The most recognized and utilized test methods are: SAE J905, SAE J1488, SAE J1839 (in North America), and ISO 4020 (in Europe and Asia). All of these test methods require complex and sophisticated test equipment and, therefore, are outside the scope of this publication.

Most filter manufacturers follow these test methods, but several use test methods of their own design. The current SAE and ISO published test methods do not take the effects of engine vibration into consideration. They also measure capacity in grams of test dust collected instead of gallons of diesel fuel to determine filter life.

Filtration Efficiency

Fuel filters are supplied for various applications and, therefore, there is a need for different levels of filtration efficiency in the removal or retention of particles. The hydraulic industry uses a rating method that uses the term "Beta Ratio" to describe a filtration efficiency level. The diesel fuel filtration industry generally uses simple filtration efficiency as the method of rating a fuel filter. Since there is no such thing as a fuel that provides absolute filtration of the particle sizes that are cause for concern, the industry uses terms like 96% at 5 microns. This term means, that when tested to SAE or ISO test methods the filter will retain 96% of all 5 micron size and larger particles.

Racor makes filters with various filtration efficiencies, but its standards for non-OEM (Original Equipment Manufacturer) are 2, 10, and 30 micron filter elements. The actual efficiency ratings for these are 98%, 95%, and 90% respectively. Racor also makes use of a 7 and 20 micron filter medium which are used to meet certain engine manufacturer's requirements for a final filter and a primary filter.

Racor's 2 micron filter medium should only be used in final or secondary filters where the fuel is first filtered by a primary filter. The primary filter for a 2 micron final filter should use a 10 micron medium. The exception in using a 2 micron filter in place of a primary filter is to obtain high-efficiency water separation, and is usually used in marine applications where the fuel supply may be cleaner but also may contain water more often. If the installation can allow the use of a filter large enough, then a 2 micron filter can serve in a system as the only filter in that system.

New high pressure common rail fuel injection systems require high efficiency in removal of small particles. The requirement is 95% for 3 micron particles. Racor fuel filters have a medium designed for these applications. Replacement elements should state, "For Use With Common Rail Fuel Injection Systems." Dirt levels in fuel also direct the level of efficiency required. Since the filters removes a percentage of dirt particles, it follows that when a much greater amount of dirt is present in the fuel, a greater number of particles will pass through the filter. Diesel engines used in earth moving or agriculture should use fuel filters that have higher efficiency than those for over-the-road or marine.

The planning must also take into consideration whether the filter is to be installed on the engine or the chassis and whether on the vacuum or pressure side of the system. Filter installations on the engine make the filter subject to high frequency vibrations which reduces the efficiency level, (as do spill port metering injection pumps). ***See Racor brochure #7550 for additional information.***

Section: A
Mobile Fuel Filtration

aerospace
climate control
electromechanical
filtration
fluid & gas handling
hydraulics
pneumatics
process control
sealing & shielding

Parker Racor

ENGINEERING YOUR SUCCESS.

Table of Contents

025 Series In-Line Fuel Prefilters A1
PS120 Series Strainer/Prefilters A17
045-RAC-351 ..... A21
100 Series Compact Fuel Filter/Water Separator Series A25
200 Series Low Flow Fuel Filter/Water Separator Series A38
300 Series A54
300RC Series with coolant heater A70
400 Series Spin-On with priming pump A80
424 Series Series Fuel Heater/Water Separator A91
500 Series Fuel Heater/Water Separator A97
600 Series Spin-On Fuel Filter/Water Separator with mounting bracket A118
Nautilus Primary Fuel Filter/Water Separator with heat exchanger A127
700 Series Electronic Priming Pump w/Spin-On Fuel Filter/Water Separator A133
777R Series Frame Mount Fuel Filter/Water Separator A145
RK12963 Retrofit Kit for 90S1230C A151
790R30 Integrated Electronic Priming Pump Replacement Parts & Kits A153
Dual Spin-On Series A160
Engine Spin-On Series A165
FS240 Series Fuel Senders In Tank Electronic Fuel Senders A196
P Series Electronic Pump with cartridge element A198
Parfit Products A202
Turbine Series A248
Filterpumps A276
Accessories A295
- Solid State Electronic Flasher A294
- No-spill Filler Spout A298
- Parker Super O-lube A298
- Bowl Wrench A298
- Water Probe Kits A299
- Water Detection Modules A301
- Vacuum Gauges A305
- Compound Gauge Kits A307
- Vacuum Restriction Indicators A308
- Filter “Block Off” Caps A309
- Mounting Bracket Kit A309
- OEM Kits A310
- Electrical Heater Relay Kits A311
- Aqua Bloc II Demonstration Unit A312
- Fuel Polishing A313

Part Number Index A315

025 Series

In-Line Fuel Prefilters

025 Series In-Line Fuel Prefilters are the first stage in keeping your fuel clean. Dirt and grime in fuel can spell disaster. A secondary or final Racor filter should be installed after this filter for superior protection.

Installing a prefilter in your fuel system will increase overall filter life, saving you money.

Typical Mobile Applications:

- **ATV (4-wheeler)**
- **Small Gensets**
- **Small Tractors**
- **Any Small Engine**

Product Features:

025-RAC-01 and 025-MBL-02B

- **1/4´´-18 NPTF Ports**
- **15 GPH (57 LPH) with Diesel 25 GPH (95 LPH) with Gasoline**
- **Easy Spin-On Servicing**
- **Proprietary Aquabloc®II filter**
- **Easy Installation**
- **Saves Money**

025-RAC-10A, 025-RAC-11, 025-RAC-12, and 025-RAC-13

- **Easy One-Piece Installation**
- **Use with Gasoline and Blended Fuels**
- **Rugged and Reliable**
- **Saves Money**
- **Clear Plastic Design**

025 Series

025 Series Overview

Specifications	025-RAC-01	025-MBL-02B	025-RAC-10A
Maximum Flow Rate: **(with gasoline)** **(with diesel)**	25 GPH (95 LPH) 15 GPH (57 LPH)	25 GPH (95 LPH) 15 GPH (57 LPH)	60 GPH (227 LPH) 25 GPH (95 LPH)
Inlet/Outlet Port Size	1/4´´-18 NPTF	1/4´´-18 NPTF	1/2´´ NPTF
Replacement Filter	S2501	S2502	N/A
Micron Rating (nominal)	250	10	104
Minimum Service Clearance	3.0 in. (7.6 cm)	3.0 in. (7.6 cm)	1.0 in. (2.5 cm)
Height	4.3 in. (10.9 cm)	4.3 in. (10.9 cm)	4.2 in. (10.7 cm)
Width	2.3 in. (5.8 cm)	2.3 in. (5.8 cm)	1.9 in. (4.8 cm)
Depth	2.1 in. (5.3 cm)	2.1 in. (5.3 cm)	1.9 in. (4.8 cm)
Weight (dry)	0.3 lb (0.14 kg)	0.3 lb (0.14 kg)	0.6 lb (0.27 kg)
Maximum Working Pressure[1]	100 PSI (6.9 bar)	100 PSI (6.9 bar)	50 PSI (3.4 bar)
Clean Pressure Drop	0.35 PSI (0.02 bar)	0.35 PSI (0.02 bar)	0.6 PSI (0.04 bar)
Water Removal Efficiency	12%	99%	N/A
Case Quantity	6	12	6
Ambient Fuel Temperature	-10° to 180°F (-23° to 82°C)		
Maximum Fuel Temperature	160°F (71°)C)		

Special Notes: [1] Pressure installations acceptable up to maximum PSI shown (vacuum installations recommended).

Questions? Contact Technical Support:
800 344 3286 or 209 521 7860 ext. 7555
e-mail: racortech@parker.com

025 Series

025 Series Overview

Specifications	025-RAC-11	025-RAC-12	025-RAC-13
Maximum Flow Rate (with gasoline)	12 GPH (45 LPH)	12 GPH (45 LPH)	12 GPH (45 LPH)
Inlet/Outlet Port Size	1/4´´ Hose Bead	5/16´´ Hose Bead	3/8´´ Hose Bead
Replacement Element	N/A	N/A	N/A
Micron Rating (nominal)	12	12	12
Minimum Service Clearance	1.0 in. (2.5 cm)	1.0 in. (2.5 cm)	1.0 in. (2.5 cm)
Height	3.5 in. (8.9 cm)	3.5 in. (8.9 cm)	3.5 in. (8.9 cm)
Diameter	2.1 in. (5.3 cm)	2.1 in. (5.3 cm)	2.1 in. (5.3 cm)
Weight (dry)	0.1 lb (0.05 kg)	0.1 lb (0.05 kg)	0.1 lb (0.05 kg)
Maximum Working Pressure[1]	10 PSI (0.7 bar)	10 PSI (0.7 bar)	10 PSI (0.7 bar)
Water Removal Efficiency	N/A	N/A	N/A
Case Quantity	1	1	1
Ambient Fuel Temperature	-10° to 180°F (-23° to 82°C)		
Maximum Fuel Temperature	160°F (71°)C)		

Special Notes: [1] Pressure installations acceptable up to maximum PSI shown (vacuum installations recommended).

025 Series

Mounting Instructions

025-RAC-01 and 025-MBL-02B

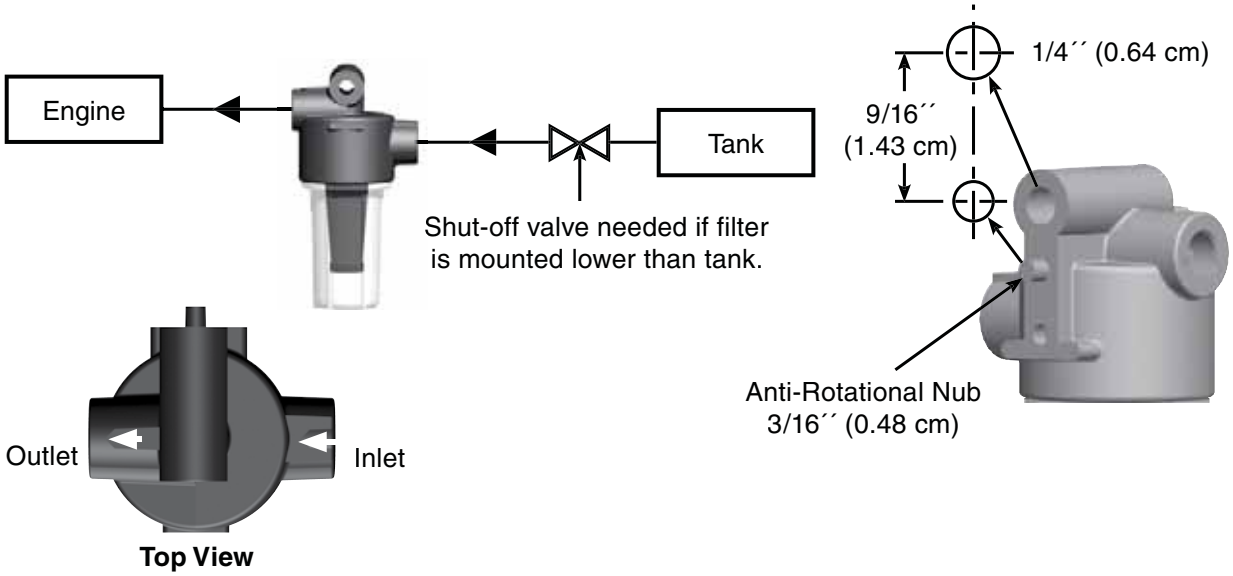

025-RAC-10A, 025-RAC-11, 025-RAC-12 and 025-RAC-13

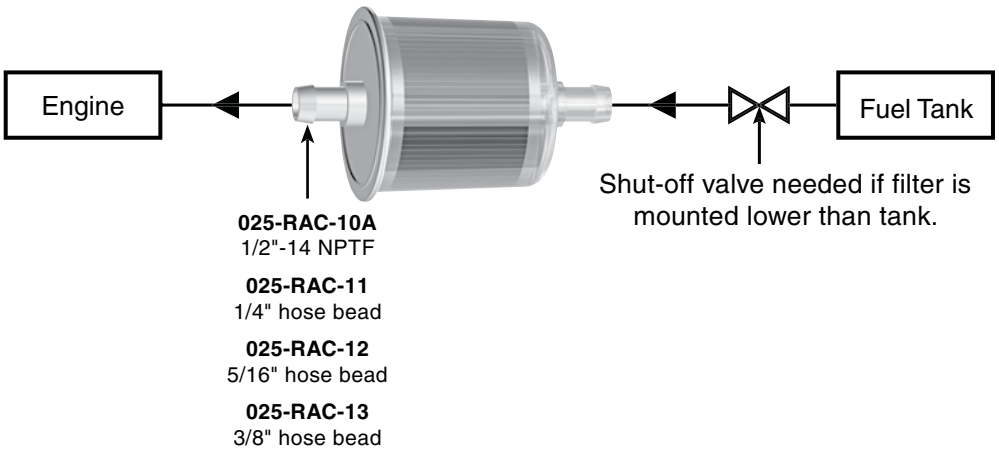

025 Series

Replacement Parts

025-RAC-01 and 025-MBL-02B

	Part Number	Description
1.	N/A	Mounting Head Kit (1/4´´-18 NPTF Ports)
2.	N/A	Bowl O-ring
3.	a: S2501 b: S2502	250 micron (for 025-RAC-01) Includes #2 10 micron (for 025-MBL-02B) Includes #2
4.	RK 31391	Clear Bowl Kit (includes #2)

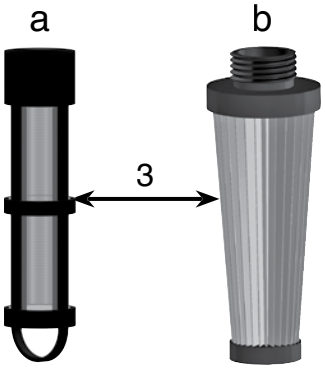

025-RAC-10A, 025-RAC-11, 025-RAC-12, and 025-RAC-13

No replacement parts available. Order complete assembly for replacement.

025 Series

Test Data (not available for all assemblies)

025-RAC-01 only

SEA J1839 Water Separation

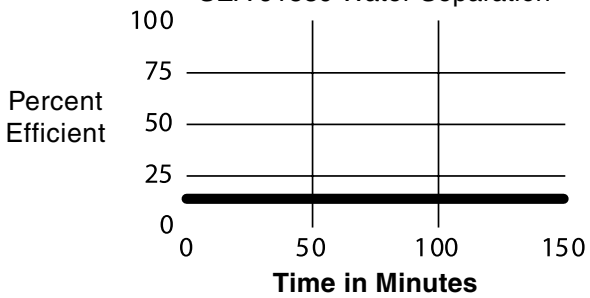

SEA J905 Fuel Flow Restriction

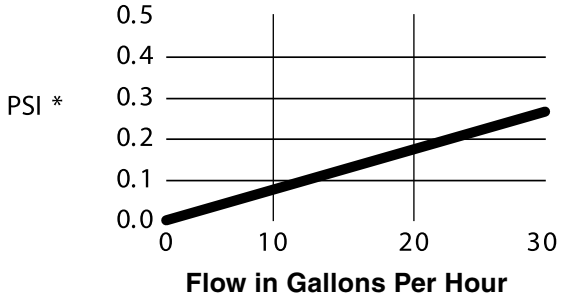

025-MBL-02B

SEA J1839 Water Separation

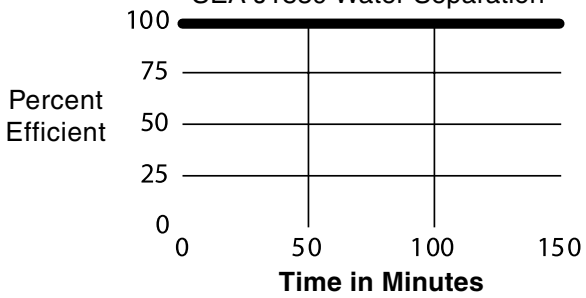

SEA J905 Fuel Flow Restriction

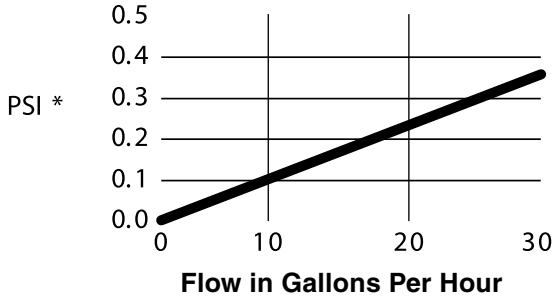

SEA J905 Solids Capacity
(using fine test dust @ 25 GPH)

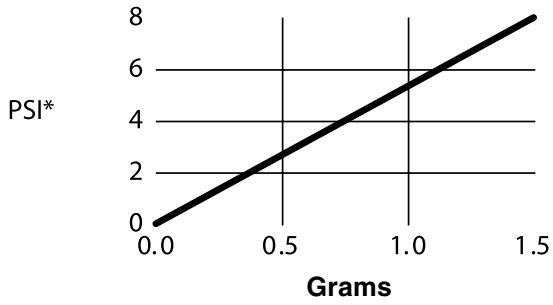

(PSI X 2.036 = inHg) (PSI X 6.895 = kPa)

Test results are from controlled laboratory testing. Field results may vary.

Questions? Contact Technical Support:
800 344 3286 or 209 521 7860 ext. 7555
e-mail: racortech@parker.com

025 Series

025-RAC-01

Fuel Filter/Water Separator

The 025-RAC In-line Gasoline Filter Series keeps your fuel clean and dry, because having grime and water in your fuel spells disaster. More than ever, today's high performance gasoline engines require clean, dry fuel. Standard fuel filters simply succumb from normal usage, and don't offer the improved features, durability and peace-of-mind that comes with Racor fuel filters. Experienced sailors trust their engines, their livelihood, and even their lives to Racor's high quality marine products. Shouldn't you?

Specifications	
Maximum Flow Rate: (with gasoline)	25 GPH (95 LPH)
Inlet/Outlet Port Size	1/4"-18 NPTF
Housing Material	Die-cast aluminum head with clear, reusable plastic bowl.
Replacement Element	S2501 (straining element)
Micron Rating (nominal)	250
Minimum Service Clearance (below filter)	3.0 in. (7.6 cm)
Height	4.3 in. (10.9 cm)
Depth	2.1 in. (5.3 cm)
Width	2.3 in. (5.8 cm)
Weight (dry)	0.3 lbs (0.14 kg)
Maximum Working Pressure[1]	100 PSI (6.9 bar)
Water Removal Efficiency	99%
Clean Pressure Drop	0.35 PSI (0.02 bar)
Case Quantity	6
Ambient Temperature Range	-40° to +250°F (-40° to +121°C)
Maximum Fuel Temperature	190°F (88°C)

Notes: [1]Pressure installations acceptable up to maximum PSI shown. Vacuum installations are recommended.

Questions? Contact Technical Support:
800 344 3286 or 209 521 7860 ext. 7555
e-mail: racortech@parker.com

025 Series

025-RAC-02

Fuel Filter/Water Separator

The 025-RAC In-line Gasoline Filter Series keeps your fuel clean and dry, because having grime and water in your fuel spells disaster. More than ever, today's high performance gasoline engines require clean, dry fuel. Standard fuel filters simply succumb from normal usage, and don't offer the improved features, durability and peace-of-mind that comes with Racor fuel filters. Experienced sailors trust their engines, their livelihood, and even their lives to Racor's high quality marine products. Shouldn't you?

Specifications	
Maximum Flow Rate: **(with gasoline)** **(with diesel)**	 25 GPH (95 LPH) 15 GPH (57 LPH)
Inlet/Outlet Port Size	1/4"-18 NPTF
Housing Material	Die-cast aluminum head with clear, reusable plastic bowl.
Replacement Element	S2502
Micron Rating (nominal)	10
Minimum Service Clearance (below filter)	3.0 in. (7.6 cm)
Height	4.3 in. (10.9 cm)
Depth	2.1 in. (5.3 cm)
Width	2.3 in. (5.8 cm)
Weight (dry)	0.3 lbs (0.14 kg)
Maximum Working Pressure[1]	100 PSI (6.9 bar)
Water Removal Efficiency	99%
Clean Pressure Drop	0.35 PSI (0.02 bar)
Case Quantity	12
Ambient Temperature Range	-40° to +250°F (-40° to +121°C)
Maximum Fuel Temperature	190°F (88°C)

Notes: [1]Pressure installations acceptable up to maximum PSI shown. Vacuum installations are recommended.

Questions? Contact Technical Support:
800 344 3286 or 209 521 7860 ext. 7555
e-mail: racortech@parker.com

025 Series

025-MBL-02B

Fuel Filter/Water Separator

Water and contaminants in fuel have been a problem for decades. More than ever, today's high-performance engines require clean, dry fuel. Standard fuel filters simply don't offer the improved features and peace-of-mind that come with Racor fuel filter/water separators.

These compact heavy-duty filters install quickly and remove solid contaminants and water from gasoline or diesel fuel. Typical applications include: small gensets, snow machines, lawn mowers, pressure washers, and small diesel engines up to 80 HP (gasoline up to 250 HP).

Specifications	
Maximum Flow Rate: **(with gasoline)** **(with diesel)**	 25 GPH (95 LPH) 15 GPH (57 LPH)
Inlet/Outlet Port Size	1/4"-18 NPTF
Housing Material	Die-cast aluminum head with clear, reusable plastic bowl.
Replacement Element	S2502
Micron Rating (nominal)	10
Minimum Service Clearance (below filter)	3.0 in. (7.6 cm)
Height	4.3 in. (10.9 cm)
Depth	2.1 in. (5.3 cm)
Width	2.3 in. (5.8 cm)
Weight (dry)	0.3 lbs (0.14 kg)
Maximum Working Pressure[1]	100 PSI (6.9 bar)
Water Removal Efficiency	99%
Clean Pressure Drop	0.35 PSI (0.02 bar)
Case Quantity	12
Ambient Temperature Range	-40° to +250°F (-40° to +121°C)
Maximum Fuel Temperature	190°F (88°C)

Notes: [1]Pressure installations acceptable up to maximum PSI shown. Vacuum installations are recommended.

Questions? Contact Technical Support:
800 344 3286 or 209 521 7860 ext. 7555
e-mail: racortech@parker.com

Parker Racor

025 Series

025-RAC-05

Fuel Filter/Water Separator

The 025-RAC In-line Gasoline Filter Series keeps your fuel clean and dry, because having grime and water in your fuel spells disaster. More than ever, today's high performance gasoline engines require clean, dry fuel. Standard fuel filters simply succumb from normal usage, and don't offer the improved features, durability and peace-of-mind that comes with Racor fuel filters. Experienced sailors trust their engines, their livelihood, and even their lives to Racor's high quality marine products. Shouldn't you?

Specifications	
Maximum Flow Rate: **(with gasoline)** **(with diesel)**	 25 GPH (95 LPH) 15 GPH (57 LPH)
Inlet/Outlet Port Size	1/4"-18 NPTF
Housing Material	Die-cast aluminum head with clear, reusable plastic bowl.
Replacement Element	S2502
Micron Rating (nominal)	10
Minimum Service Clearance (below filter)	3.0 in. (7.6 cm)
Height	4.3 in. (10.9 cm)
Depth	2.1 in. (5.3 cm)
Width	2.3 in. (5.8 cm)
Weight (dry)	0.3 lbs (0.14 kg)
Maximum Working Pressure[1]	100 PSI (6.9 bar)
Water Removal Efficiency	99%
Clean Pressure Drop	0.35 PSI (0.02 bar)
Case Quantity	12
Ambient Temperature Range	-40° to +250°F (-40° to +121°C)
Maximum Fuel Temperature	190°F (88°C)

Notes: [1]Pressure installations acceptable up to maximum PSI shown. Vacuum installations are recommended.

Questions? Contact Technical Support:
800 344 3286 or 209 521 7860 ext. 7555
e-mail: racortech@parker.com

025 Series

025-RAC-09

Fuel Filter/Water Separator

The 025-RAC In-line Gasoline Filter Series keeps your fuel clean and dry, because having grime and water in your fuel spells disaster. More than ever, today's high performance gasoline engines require clean, dry fuel. Standard fuel filters simply succumb from normal usage, and don't offer the improved features, durability and peace-of-mind that comes with Racor fuel filters. Experienced sailors trust their engines, their livelihood, and even their lives to Racor's high quality marine products. Shouldn't you?

Specifications	
Maximum Flow Rate: **(with gasoline)** **(with diesel)**	 25 GPH (95 LPH) 15 GPH (57 LPH)
Inlet/Outlet Port Size	1/4"-18 NPTF
Housing Material	Die-cast aluminum head with clear, reusable plastic bowl.
Replacement Element	S2502
Micron Rating (nominal)	10
Minimum Service Clearance (below filter)	3.0 in. (7.6 cm)
Height	4.3 in. (10.9 cm)
Depth	2.1 in. (5.3 cm)
Width	2.3 in. (5.8 cm)
Weight (dry)	0.3 lbs (0.14 kg)
Maximum Working Pressure[1]	100 PSI (6.9 bar)
Water Removal Efficiency	99%
Clean Pressure Drop	0.35 PSI (0.02 bar)
Case Quantity	12
Ambient Temperature Range	-40° to +250°F (-40° to +121°C)
Maximum Fuel Temperature	190°F (88°C)

Notes: [1]Pressure installations acceptable up to maximum PSI shown. Vacuum installations are recommended.

Questions? Contact Technical Support:
800 344 3286 or 209 521 7860 ext. 7555
e-mail: racortech@parker.com

Parker Racor

025 Series

Installation Instructions

The following customer supplied materials should be on hand before beginning:

- **Two 1/4”-18 NPT fittings.**
- **1/4” hose (or larger) and hose clamps.**
- **Thread sealant (no thread tapes).**
- **1/4” bolt (or lag bolt).**

The 025 series filters are designed to be installed on suction (vacuum) side applications; (pressure side installations are acceptable up to 100 PSI (6.9 bar)). Do not smoke or allow open flames around fuel or filters.

1. **Make sure engine is off and cool to touch.**
2. **Apply thread sealant to 1/4” NPT fittings (do not use thread tapes as particles may break off and contribute to clogging filter).**
3. **Thread fittings into fuel ports and tighten snugly.**
4. **Mount filter vertically in a protected area and away from heat sources. Maintain at least 3 inches of clearance below filter for servicing. Follow mounting instructions below and use a 1/4” bolt to secure filter to engine.**
5. **Attach fuel lines to filter.**
6. **Start engine and check for leaks. Correct as necessary with engine off.**

Mounting Instructions

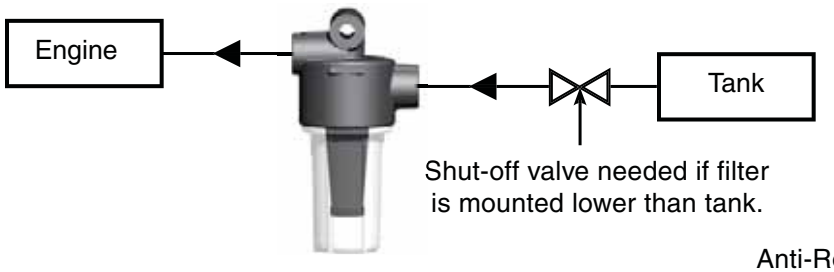

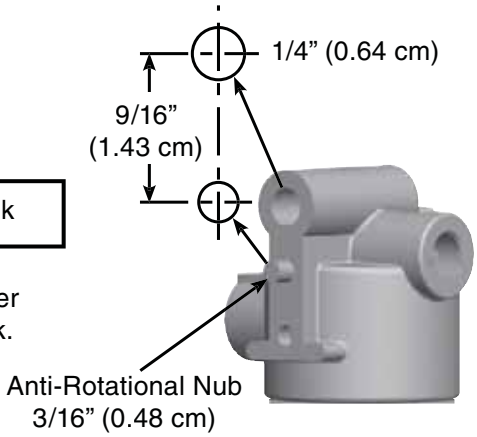

Service Instructions

1. **When water is visible in clear bowl or engine performance is reduced, service is required.**
2. **Make sure engine is off and cool to touch.**
3. **Spin clear bowl off of mounting head by turning in a counter-clockwise motion.**
4. **Replace used filter with new filter (part number S2502).**
5. **Lubricate bowl o-ring with clean motor oil.**
6. **Thread bowl onto mounting head and tighten hand tight only - do not use tools.**
7. **Start engine and check for leaks. Correct as necessary with engine off.**

Questions? Contact Technical Support:
800 344 3286 or 209 521 7860 ext. 7555
e-mail: racortech@parker.com

025 Series

Replacement Parts

025-MBL-02B, 025-RAC-01 and 025-RAC-02

	Part Number	Description
1.	**RK 31390-05-03**	Mounting Head Kit (¼”-18 NPT Ports) (includes #4)
2.	**N/A**	Bowl O-ring is included with every new element

Replacement Elements (includes #4)

3.	**S2501**	250 micron (for 025-RAC-01
	S2502	10 micron (for 025-RAC-02)
4.	**RK 31391**	Clear Bowl Kit (includes #4)

Note:
025-RAC-05, 025-RAC-09, 025-RAC-10A
025-RAC-11, 025-RAC-12, and 025-RAC-13

No replacement parts available. Order complete assembly for replacement.

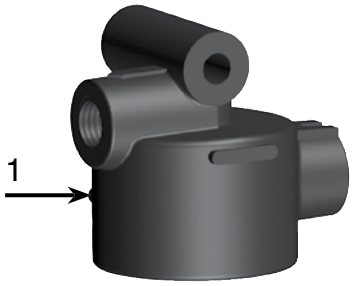

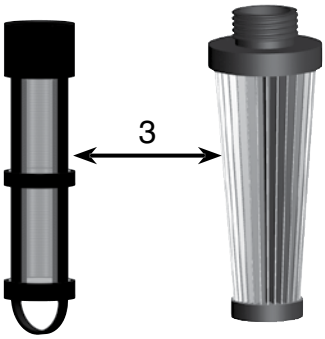

025 Series

Test Data (not available for all assemblies)

025-RAC-01 only

SEA J1839 Water Separation

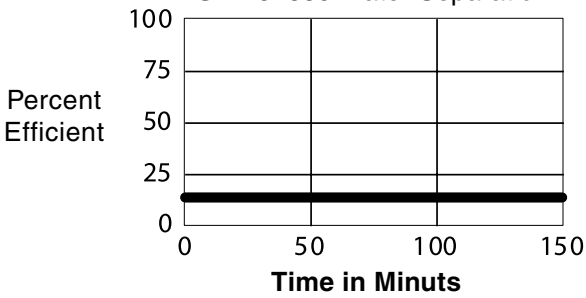

SEA J905 Fuel Flow Restriction

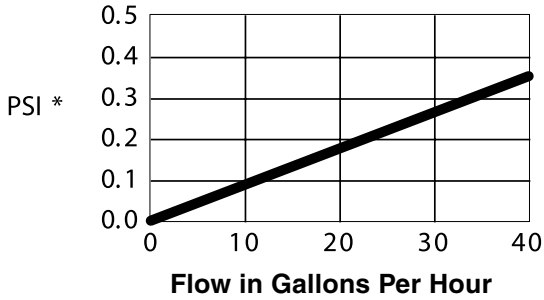

025-MBL-02B
025-RAC-02

SEA J1839 Water Separation

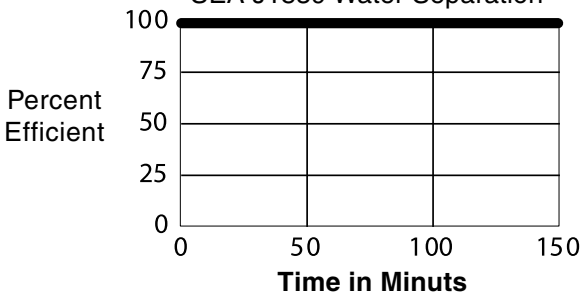

SEA J905 Fuel Flow Restriction

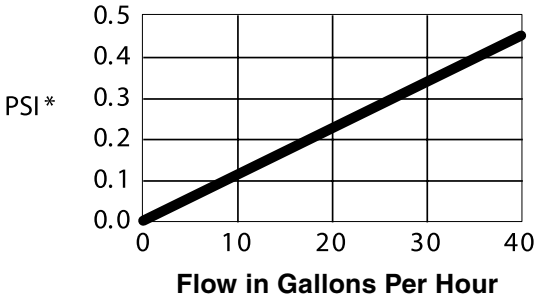

SEA J905 Solids Capacity
(using fine test dust @ 25 GPH)

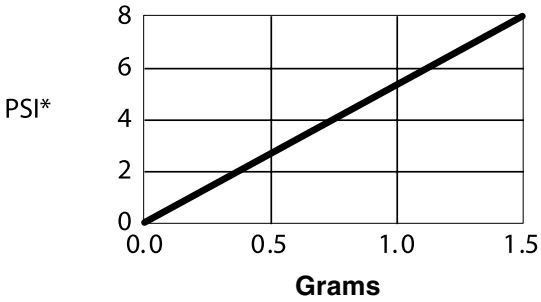

(PSI X 2.036 = inHg) (PSI X 6.895 = kPa)

Test results are from controlled laboratory testing. Field results may vary.

Questions? Contact Technical Support:
800 344 3286 or 209 521 7860 ext. 7555
e-mail: racortech@parker.com

025 Series Overview

Specifications	025-RAC-01	025-RAC-02	025-RAC-05	025-RAC-09
Maximum Flow Rate	25 GPH (95 LPH)	25 GPH (95 LPH)	25 GPH (95 LPH)	35 GPH (132 LPH)
Application	Outboard	Outboard	Inboard	Inboard
Port Size	1/4”-18 NPT	1/4”-18 NPT	5/16” Hose Bead	3/8” NPT
Housing Material	[1]Anodized diecast aluminum head with clear, reusable plastic bowl.	[1]Anodized diecast aluminum head with clear, reusable plastic bowl. Separates water.	All steel with black “E” coating for corrosion resistance.	All stainless steel.
Replacement Element	S2501 (straining element)	S2502 (Aquabloc®II element)	N/A	N/A
Micron Rating	250	10	10	116
Min. Service Clearance	3.0 in. (7.6 cm)	3.0 in. (7.6 cm)	1.0 in. (2.5 cm)	1.0 in. (2.5 cm)
Height	4.3 in. (10.9 cm)	4.3 in. (10.9 cm)	4.8 in. (12.1 cm)	4.5 in. (11.4)
Diameter	2.1 in. (5.3 cm)	2.1 in. (5.3 cm)	2.3 in. (5.7 cm)	2.2 in. (5.6 cm)
Weight (dry)	0.3 lb (0.14 kg)	0.3 lb (0.14 kg)	0.3 lb (0.14 kg)	0.3 lb (0.14 kg)
Max. Working Pressure[2]	100 PSI (690 kPa)	100 PSI (690 kPa)	30 PSI (207 kPa)	30 PSI (207 kPa)
H_2O Removal Efficiency	N/A	99%	N/A	N/A
Case Quantity	6	6	12	6
Ambient Fuel Temperature	-10° to +180°F (-23° to +82°C)			

Special Notes: [1]Anodizing is a chemical process that provides corrosion resistance.
[2]Pressure installations acceptable up to maximum amount shown - vacuum installations recommended.

025 Series

025 Series Overview

Specifications	025-RAC-10A	025-RAC-11	025-RAC-12	025-RAC-13
Maximum Flow Rate	35 GPH (132 LPH)	12 GPH (45 LPH)	12 GPH (45 LPH)	12 GPH (45 LPH)
Application	Inboard	Outboard	Outboard	Outboard
Port Size	½” NPT	¼” Hose Bead	5/16” Hose Bead	3/8” Hose Bead
Housing Material	All steel, painted black.	Plastic	Plastic	Plastic
Replacement Element	N/A	N/A	N/A	N/A
Micron Rating	104	12	12	12
Min. Service Clearance	1.0 in. (2.5 cm)	1.0 in. (2.5 cm)	1.0 in. (2.5 cm)	1.0 in. (2.5 cm)
Height	4.2 in. (10.7 cm)	3.5 in. (8.9 cm)	3.5 in. (8.9 cm)	3.5 in. (8.9 cm)
Diameter	1.9 in. (4.8 cm)	2.1 in. (5.3 cm)	2.1 in. (5.3 cm)	2.1 in. (5.3 cm)
Weight (dry)	0.6 lb (0.27 kg)	0.1 lb (0.05 kg)	0.1 lb (0.05 kg)	0.1 lb (0.05 kg)
Max. Working Pressure[1]	100 PSI (690 kPa)	10 PSI (69 kPa)	10 PSI (69 kPa)	10 lb (69 kPa)
H_2O Removal Efficiency	N/A	N/A	N/A	N/A
Case Quantity	6	1	1	1
Ambient Fuel Temperature	-10° to +180°F (-23° to +82°C)			

Special Notes: [2]Pressure installations acceptable up to maximum amount shown - vacuum installations recommended.

Questions? Contact Technical Support:
800 344 3286 or 209 521 7860 ext. 7555
e-mail: racortech@parker.com

PS120 Series Strainer/Prefilters

PS 120
Strainer/Prefilter

From personal watercraft to agricultural equipment, the PS120 Series high-flow diesel or gasoline strainer/prefilter is designed to protect fuel pumps, carburetors, injectors and related fuel system components. These innovative strainer/prefilters feature a heavy-duty die-cast aluminum mounting head, 4 port mounting versatility, a 200-260 micron cleanable nylon mesh screen, and a reusable clear water and sediment collection bowl.

The PS120 Series is ideal for equipment in environments with severe contamination and must be installed prior to, and in conjunction with, a Racor fuel filter/water separator. Strainers remove large droplets of free water and contaminants down to 200 micron. When used prior to engine fuel filter/water separator, extended filter life is realized.

Product Features

- 4-port aluminum mounting head with 3/8" or 1/2" NPTF threads
- Rugged construction
- Reusable collection bowl
- Easy to service and install
- 200-260 micron cleanable mesh screen filter
- Use on any gasoline or diesel application.
- Removes large droplets of water and sediment
- Saves time and money
- Extends filter life
- Use in land and marine applications

Questions? Contact Technical Support:
800 344 3286 or 209 521 7860 ext. 7555
e-mail: racortech@parker.com

Parker Racor

PS120 Series Strainer/Prefilters

PS120 Series Strainer/Prefilters Overview

Specifications	PS120-01	PS120-02
Maximum Flow Rate	120 GPH (454 LPH)	120 GPH (454 LPH)
Housing Material	Die-cast aluminum head with clear, reusable plastic bowl.	Die-cast aluminum head with clear, reusable plastic bowl.
Micron Rating	200-260	200-260
Height	7.0 in. (17.8 cm)	7.0 in. (17.8 cm)
Width	4.0 in. (10.2 cm)	4.0 in. (10.2 cm)
Maximum Working Pressure[1]	30 PSI (2.1 bar)	30 PSI (2.1 bar)
Clean Pressure Drop	0.9 PSI (0.1 bar)	0.9 PSI (0.1 bar)
Ambient Temperature Range	-40° to +250°F (-40° to +121°C)	-40° to +250°F (-40° to +121°C)

Notes: [1]Pressure installations acceptable up to maximum PSI shown. Vacuum installations are recommended.

Mounting Information

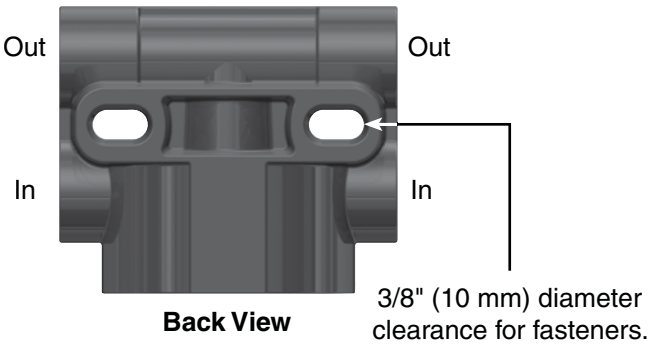

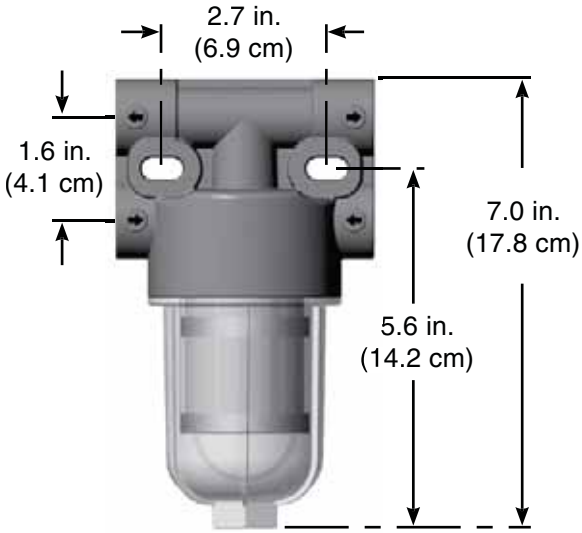

Questions? Contact Technical Support:
800 344 3286 or 209 521 7860 ext. 7555
e-mail: racortech@parker.com

PS120 Series Strainer/Prefilters

Service Instructions

Mesh screen cleaning/replacement frequency is determined by contamination level in fuels. Fuel flow to engine becomes restricted as screen gradually plugs with contaminants, resulting in noticeable power loss and/or hard starting. As a guideline, clean screen every 500 hours, 10,000 miles, every other oil change, annually, or at first indication of power loss, whichever occurs first. Replace if mesh screen is damaged. Always carry extra replacement screens and fuel filters as one tankful of excessively dirty fuel can quickly plug a prefilter and a fuel filter/water separator filter.

1. **Make sure engine is off and cool to touch.**
2. **Close all fuel valves, if applicable, to make sure excess fuel does not spill during servicing.**
3. **With a collection pan in place, slowly remove clear bowl and mesh screen.**
4. **Clean screen with solvent and soft brush (or replace with new).**
5. **Lube bowl o-ring with motor oil or clean fuel.**
6. **Re-install mesh screen and clear bowl and tighten by hand only—do not use tools.**
7. **Open all fuel valves, if applicable.**
8. **Prime fuel system as instructed in engine manufacturers owner's manual.**
9. **Start engine and check for leaks.**

Note: Correct as necessary with engine off.

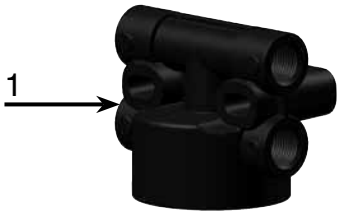

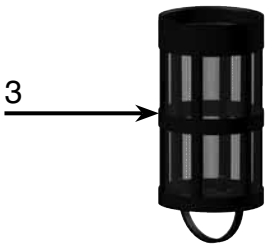

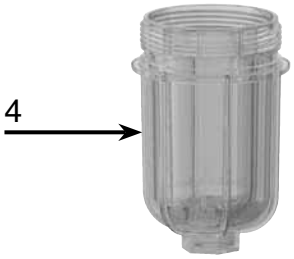

Replacement Parts

	Part Number	Description
1.	**N/A**	Mounting Head
2.	**N/A**	O-ring (not available separately)
3.	**RK 51216**	Mesh Screen Filter Kit (200-260 micron) (includes # 2)
4.	**RK 51217**	Clear Bowl Kit (includes # 2)

Additional Parts (not shown)

918-N8	**PS120-01:** 1/2" NPT Metal Plug Kit (one per kit)
22231	**PS120-02:** 3/8" NPT Metal Port Plug Kit (two per kit)
14387	Installation Instructions

PS120 Series Strainer/Prefilters

Installation Instructions

Exercise great caution when installing a PS120 Series strainer/prefilter to avoid a fire hazard. Do not smoke, allow open flame or excessive heat which could ignite a fire. Perform installation in a well ventilated area.

Refer to Mounting Information and Installation Diagram and install as follows:

1. **Make sure engine is off and cool to touch.**
2. **Apply thread sealant to 3/8" NPTF fittings (do not use thread tapes as particles may break off and contribute to clogging filter).**
3. **Thread fittings into appropriate fuel ports and tighten snugly. Plug unused ports with port plugs and tighten snugly.**
4. **Mount strainer/prefilter vertically prior to fuel filter/water separator and in protected area away from heat sources. Maintain at least 3 in. (7.6 cm) of clearance below filter for servicing.**
5. **Attach fuel lines.**

Note: Avoid tight bends and rubbing areas when routing hose.

6. **Prime fuel system as instructed in engine manufacturers owner's manual.**
7. **Start engine and check for leaks. Correct as necessary with engine off.**

Installation Diagram

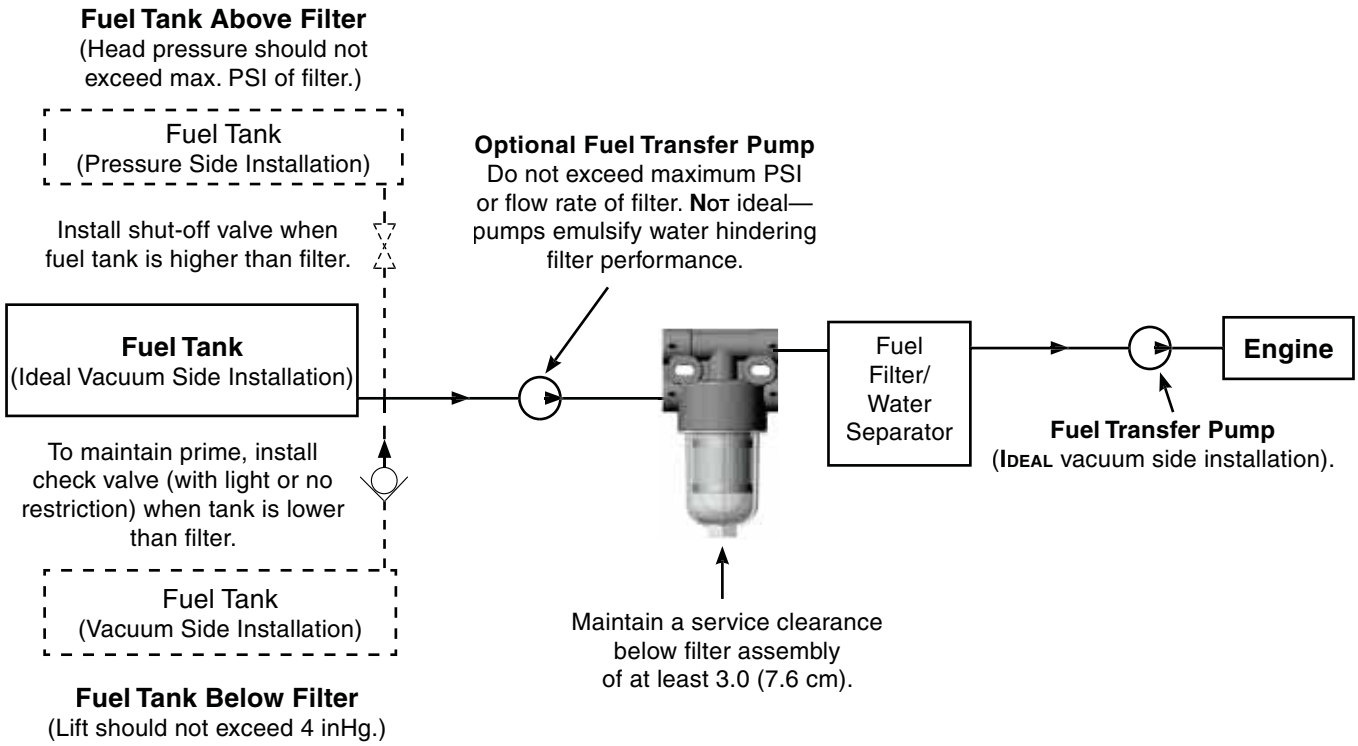

Questions? Contact Technical Support:
800 344 3286 or 209 521 7860 ext. 7555
e-mail: racortech@parker.com

045-RAC-351

045-RAC-351

Fuel Filter/Water Separator

The 045-RAC-351 fuel filter/water separator is assembled with our legendary Aquabloc®II media, a plated steel housing, a vent plug, and a lateral drain.

This filter is designed to be installed on the suction (or vacuum) side of the fuel system and is extremely effective in removing better than 93% of free water normally found in fuel due to condensation. It also removes 95% of particulate matter down to 10 micron (nominal).

Product Features

- 5/16´´ Hose Bead
- 45 GPH (170 LPH)
  with Diesel 35 GPH (132 LPH)
  with Gasoline
- Proprietary Aquabloc®II filter
- Easy Installation
- Mounting Bracket Included
- Drain Water Easily
- Rugged and Reliable
- Saves Money

Typical Mobile Applications:

- Small Gensets
- Small Tractors
- Any Small Engine
  (up to 220 HP)

045-RAC-351

045-RAC-351 Overview

Specifications	045-RAC-351
Maximum Flow Rate: **(with gasoline)** **(with diesel)**	 35 GPH (132 LPH) 45 GPH (170 LPH)
Inlet/Outlet Port Size	5/16´´ Hose Bead
Housing Material	Steel
Replacement Element	R32281
Micron Rating *(nominal)*	10
Minimum Service Clearance (above filter)	5.0 in. (12.7 cm)
Height	6.2 in. (15.7 cm)
Depth	4.9 in. (12.4 cm)
Width	5.6 in. (14.2 cm)
Weight (dry)	1.5 lb (0.68 kg)
Maximum Working Pressure[1]	30 PSI (2.07 bar)
Water Removal Efficiency	93%
Clean Pressure Drop	4 inHg (0.14 bar)
Contaminant Capacity	6.3 oz (0.19 L)
Ambient Temperature Range	-40° to +250°F (-40° to +121°C) Max Fuel Temp: 190°F (88°C)

Notes: [1]Pressure installations acceptable up to maximum PSI shown.
Vacuum installations are recommended.

Questions? Contact Technical Support:
800 344 3286 or 209 521 7860 ext. 7555
e-mail: racortech@parker.com

045-RAC-351

Mounting Information

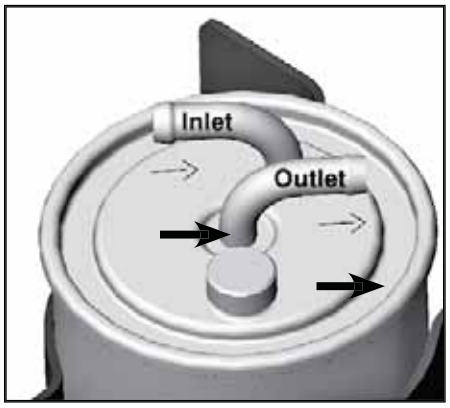

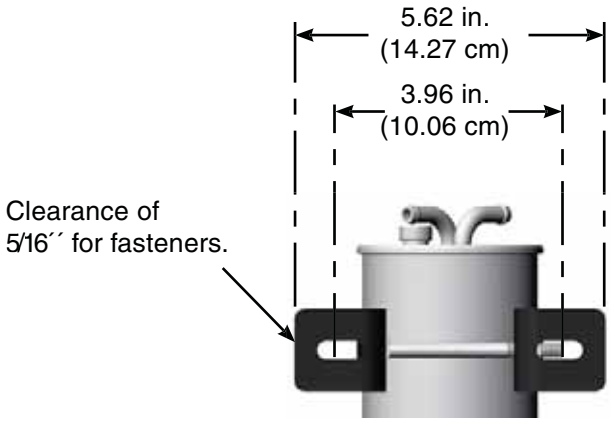

Installation Diagram

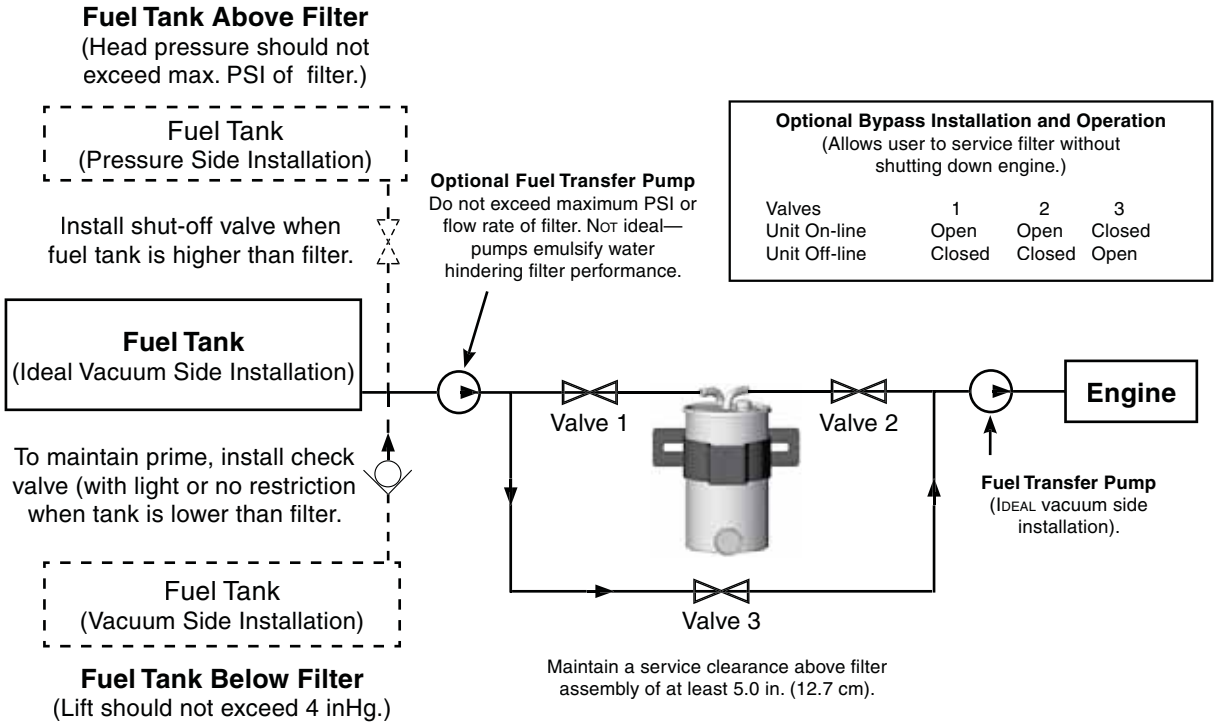

045-RAC-351

Replacement Parts

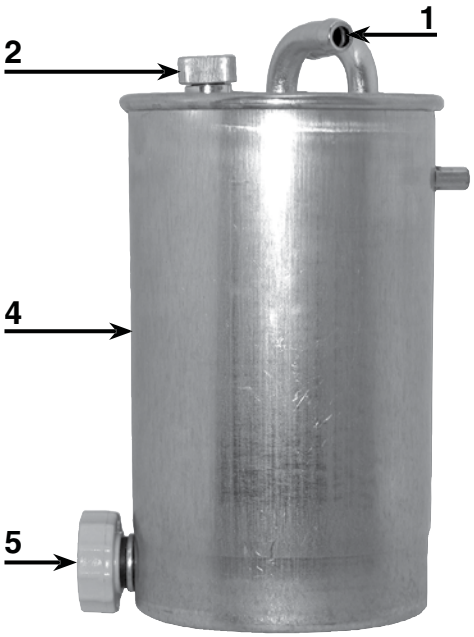

Part Number		Description
1.	N/A	Inlet/Outlet (5/16” hose bead)
2.	N/A	Vent Plug
3.	RK32274	Mounting Bracket Kit (includes bracket, carriage bolt, washers, and nut)
4.	R32281	Replacement Filter (includes #’s 1, 2, and 5)
5.	N/A	Water Drain Valve
Additional Parts (not shown)		
	32282	Installation Instructions

Questions? Contact Technical Support:
800 344 3286 or 209 521 7860 ext. 7555
e-mail: racortech@parker.com

100 Series

110A
Fuel Filter/Water Separator

The Racor 110A fuel filter/water separator features a variety of compact sizes to fit the most cramped engine compartments. All units feature 1/4”-18 NPTF inlet and outlet fuel ports and a unitized mounting bracket.

The 110A fuel filter/water separator optional accessories include: water detection kits, vacuum or compound gauges. High-capacity, Aquabloc®II cartridge elements which stop water, remove solid contamination, and are available in 2 or 10 micron.

Specifications	
Maximum Flow Rate: **(with gasoline)** **(with diesel)**	15 GPH (57 LPH) 35 GPH (132 LPH)
Inlet/Outlet Port Size	1/4”-18 NPTF
Housing Material	Metal
Replacement Element and Micron Rating	R11S (2 micron) R11T (10 micron)
Minimum Service Clearance (below filter)	2.0 in. (5.1 cm)
Height	6.0 in. (15.2 cm)
Depth	3.3 in. (8.4 cm)
Width	3.2 in. (8.1 cm)
Weight (dry)	1.3 lb (0.59 kg)
Maximum Working Pressure[1]	100 PSI (6.9 bar)
Water Removal Efficiency	99%
Clean Pressure Drop	0.15 PSI (0.01 bar)
Case Quantity	6
Ambient Temperature Range	-40° to +200°F (-40° to +93°C)
Maximum Fuel Temperature	190°F (88°C)

Notes: [1]Pressure installations acceptable up to maximum PSI shown. Vacuum installations are recommended.

Questions? Contact Technical Support:
800 344 3286 or 209 521 7860 ext. 7555
e-mail: racortech@parker.com

Parker Racor

100 Series

Top View

110A
Ports 1 and 3 are inlets.
Ports 2 and 4 are outlets.
Plug ports not used by fuel lines.

Back View

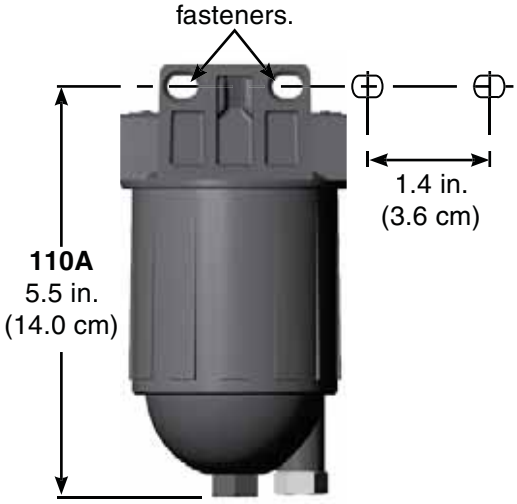

Test Data

(Test results are from controlled laboratory testing. Field results may vary.)

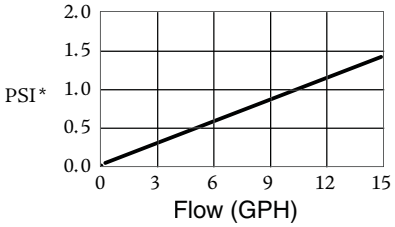

SAE J905 Fuel Flow Restriction

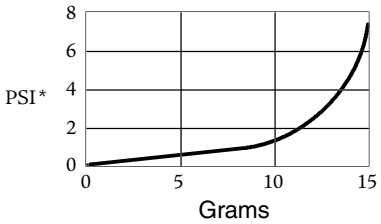

SAE J905 Solids Capacity

(using SOFTC-2A; R11T Element)

PSI X 2.036 = inHg. / PSI X 6.895 = kPa

Questions? Contact Technical Support:
800 344 3286 or 209 521 7860 ext. 7555
e-mail: racortech@parker.com

100 Series

Replacement Parts

110A

	Part No.	Description
1.	**N/A**	Head Kit (not available)
2.	**RK 10110**	Metal Vent Plug Kit (3/8”-24 UNF)
3.	**RK 21363**	Gasket/O-ring Kit
4.	Replacement Element (includes #3)	
	R11S	2 Micron
	R11T	10 Micron
5.	**RK 21364**	Housing Kit (includes #’s 5 and 6)
6.	**RK 20022**	Metal Plug Kit (1/2”-20 UNF)

Additional Parts (not shown)

RK 30880E[1]	Water Probe
RK 30817	Port Plug Kit (2 plugs per kit)
21410	Installation Instructions

[1] Do not use on gasoline applications. Water probe must be used with a water detection module - see Accessories.

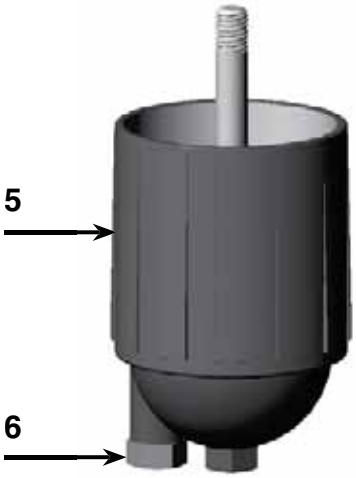

100 Series

120A

Fuel Filter/Water Separator

The Racor 120A fuel filter/water separator features a variety of compact sizes to fit the most cramped engine compartments. All units feature 1/4”-18 NPTF inlet and outlet fuel ports and a unitized mounting bracket.

These units feature Spin-On contaminant collection bowls. The clear bowls used with these models will not discolor from alcohol, additives, or UV light and have a leak-proof, positive seal drain for easy servicing. Water and contamination levels can be seen easily at a glance.

Metal bowls should be specified when filtering fuels in hazardous locations where equipment is exposed to flying gravel and debris.

Specifications	
Maximum Flow Rate: (with diesel)	15 GPH (57 LPH)
Inlet/Outlet Port Size	1/4”-18 NPTF
Housing Material	Die-cast aluminum head with clear, reusable plastic bowl.
Replacement Element	See Replacement Parts List
Micron Rating	See Replacement Parts List
Minimum Service Clearance (below filter)	2.0 in. (5.1 cm)
Height	6.5 in. (16.5 cm)
Depth	3.2 in. (8.1 cm)
Width	3.2 in. (8.1 cm)
Weight (dry)	1.1 lb (0.50 kg)
Maximum Working Pressure[1]	7.0 PSI (0.48 bar)
Water Removal Efficiency	99%
Clean Pressure Drop	0.15 PSI (0.01 bar)
Case Quantity	6
Ambient Temperature Range	-40° to +200°F (-40° to +93°C)
Maximum Fuel Temperature	190°F (88°C)

Notes: [1]Pressure installations acceptable up to maximum PSI shown. Vacuum installations are recommended.

Questions? Contact Technical Support:
800 344 3286 or 209 521 7860 ext. 7555
e-mail: racortech@parker.com

100 Series

120B
Fuel Filter/Water Separator

The Racor 120B fuel filter/water separator features a variety of compact sizes to fit the most cramped engine compartments. All units feature 1/4”-18 NPTF inlet and outlet fuel ports and a unitized mounting bracket.

These units feature Spin-On contaminant collection bowls. The clear bowls used with these models will not discolor from alcohol, additives, or UV light and have a leak-proof, positive seal drain for easy servicing. Water and contamination levels can be seen easily at a glance.

Metal bowls should be specified when filtering fuels in hazardous locations where equipment is exposed to flying gravel and debris.

Specifications	
Maximum Flow Rate: (with diesel)	20 GPH (76 LPH)
Inlet/Outlet Port Size	1/4”-18 NPTF
Housing Material	Die-cast aluminum head with clear, reusable plastic bowl.
Replacement Element	See Replacement Parts List
Micron Rating	See Replacement Parts List
Minimum Service Clearance (below filter)	2.0 in. (5.1 cm)
Height	8.0 in. (20.3 cm)
Depth	3.2 in. (8.1 cm)
Width	3.2 in. (8.1 cm)
Weight (dry)	1.2 lb (0.54 kg)
Maximum Working Pressure[1]	7.0 PSI (0.48 bar)
Water Removal Efficiency	99%
Clean Pressure Drop	0.15 PSI (0.01 bar)
Case Quantity	6
Ambient Temperature Range	-40° to +200°F (-40° to +93°C)
Maximum Fuel Temperature	190°F (88°C)

Notes: [1]Pressure installations acceptable up to maximum PSI shown. Vacuum installations are recommended.

Questions? Contact Technical Support:
800 344 3286 or 209 521 7860 ext. 7555
e-mail: racortech@parker.com

Parker Racor

100 Series

How to Order

(The example below shows how a part number is constructed.)

120AS

Specify a model:
110A* Gas 15 GPH (57 LPH)
Diesel 35 GPH (132 LPH)
120A 15 GPH (57 LPH)
120B 20 GPH (76 LPH)
140R 15 GPH (57 LPH)

Specify a micron rating:
S* for 2 micron
T* for 10 micron
P for 30 micron

***110A** is available in 2 and 10 micron only.

Top View/Back View

120A and **120B**
Ports 1 and 3 are inlets.
Ports 2 and 4 are outlets.
Plug ports not used by fuel lines.

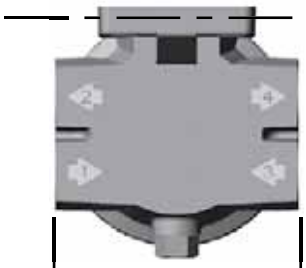

3.2 in.
(8.1 cm)

1.4 in.
(3.6 cm)

5/16 in. (.02 cm) diameter
clearance for fasteners.

120A
6.0 in.
(15.2 cm)
120B
7.5 in.
(19.1 cm)

Questions? Contact Technical Support:
800 344 3286 or 209 521 7860 ext. 7555
e-mail: racortech@parker.com

Replacement Parts

120A and 120B

	Part Number	Description
1.	**RK 10214**	Mounting Head Kit (1/4”-18 NPTF ports)
2.	**RK 10110**	Metal Vent Plug Kit (3/8”-24 SAE threads)
3.	**RK 10503**	Head Gasket Kit
4.	Replacement Element (includes #’s 3 and 5)	
	R12S	120A: 2 micron
	R12T	120A: 10 micron
	R12P	120A: 30 micron
	R13S	120B: 2 micron
	R13T	120B: 10 micron
	R13P	120B: 30 micron
5.	**RK 10012**	Bowl O-ring Kit
6.	**RK 10215**	Clear Bowl Kit
7.	**RK 30476**	Self-venting Drain Kit
8.	**RK 20126**	Plastic Plug Kit (1/2”-20 SAE threads)

Additional Parts (not shown)

RK 30964[1]	Water Probe Kit
RK 10109	Metal Bowl Kit
10219	Installation Instructions

[1] Do not use on gasoline applications. Water probe must be used with a water detection module—see accessories.

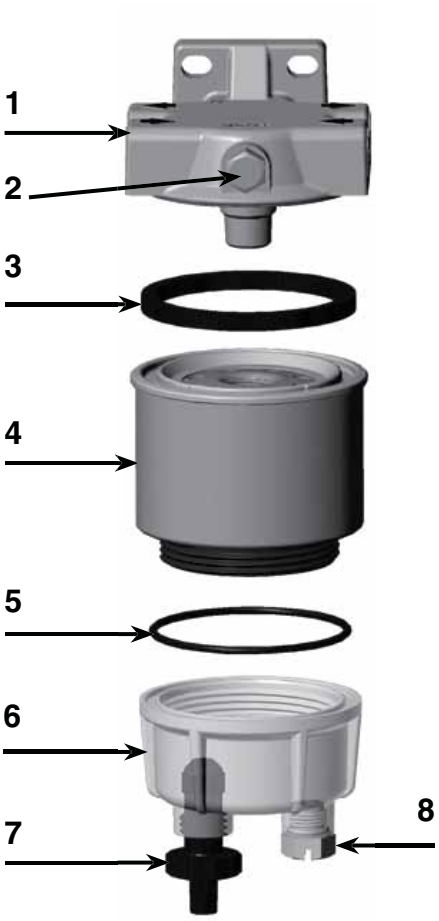

120A Shown above.

100 Series

Test Data

(Test results are from controlled laboratory testing. Field results may vary.)

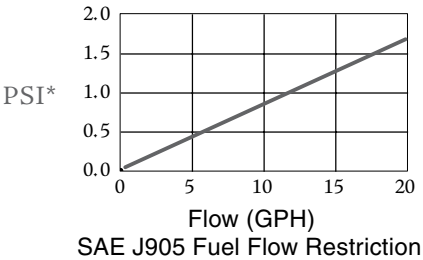

SAE J905 Fuel Flow Restriction

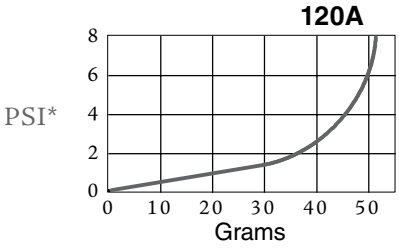

SAE J905 Solids Capacity
(using SOFTC-2A; R12T Element)

PSI X 2.036 = inHg / PSI X 6.895 = kPa

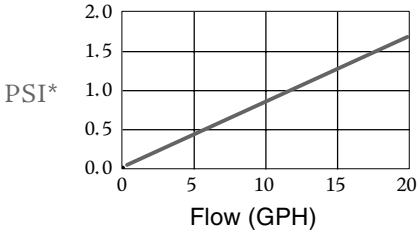

SAE J905 Fuel Flow Restriction

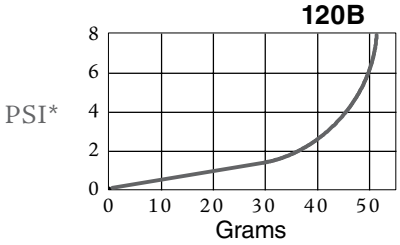

SAE J905 Solids Capacity
(using SOFTC-2A; R12T Element)

PSI X 2.036 = inHg / PSI X 6.895 = kPa

100 Series

140R
Fuel Filter/Water Separator

The Racor 140R fuel filter/water separator features a variety of compact sizes to fit the most cramped engine compartments. All units feature 1/4”-18 NPTF inlet and outlet fuel ports and a unitized mounting bracket.

These units feature Spin-On contaminant collection bowls. The clear bowls used with these models will not discolor from alcohol, additives, or UV light and have a leak-proof, positive seal drain for easy servicing. Water and contamination levels can be seen easily at a glance.

Metal bowls should be specified when filtering fuels in hazardous locations where equipment is exposed to flying gravel and debris.

Specifications	
Maximum Flow Rate: (with diesel)	15 GPH (57 LPH)
Inlet/Outlet Port Size	1/4”-18 NPTF
Housing Material	Die-cast aluminum head with clear, reusable plastic bowl.
Replacement Element	See Replacement Parts List
Micron Rating	See Replacement Parts List
Minimum Service Clearance (below filter)	2.0 in. (5.1 cm)
Height	6.0 in. (15.2 cm)
Depth	3.2 in. (8.1 cm)
Width	3.2 in. (8.1 cm)
Weight (dry)	1.1 lb (0.50 kg)
Maximum Working Pressure[1]	7.0 PSI (0.48 bar)
Water Removal Efficiency	99%
Clean Pressure Drop	0.15 PSI (0.01 bar)
Case Quantity	6
Ambient Temperature Range	-40° to +200°F (-40° to +93°C)
Maximum Fuel Temperature	190°F (88°C)

Notes: [1]Pressure installations acceptable up to maximum PSI shown. Vacuum installations are recommended.

Questions? Contact Technical Support:
800 344 3286 or 209 521 7860 ext. 7555
e-mail: racortech@parker.com

Parker Racor

100 Series

140R

Top View

Front View

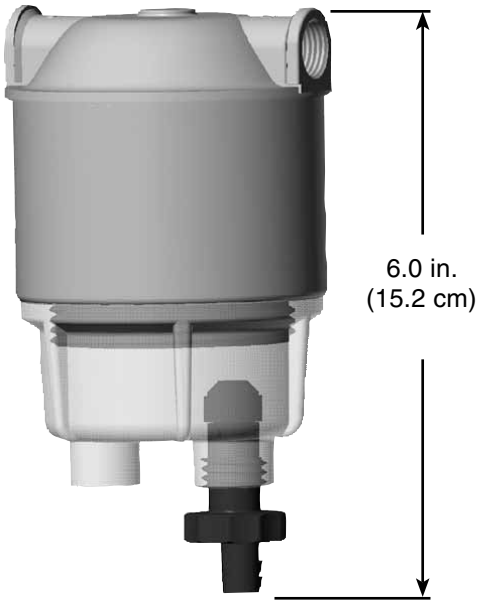

Test Data

(Test results are from controlled laboratory testing. Field results may vary.)

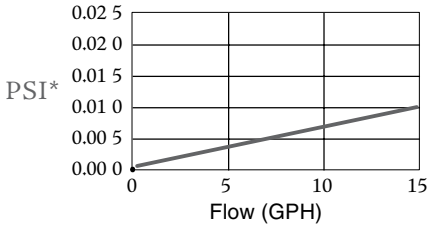

SAE J905 Fuel Flow Restriction

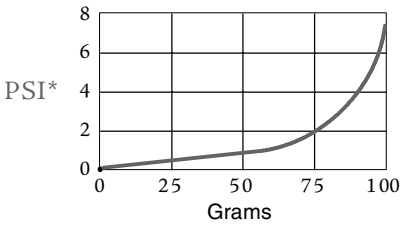

SAE J905 Solids Capacity
(using SOFTC-2A; R12T Element)

PSI X 2.036 = inHg / PSI X 6.895 = kPa

Questions? Contact Technical Support:
800 344 3286 or 209 521 7860 ext. 7555
e-mail: racortech@parker.com

100 Series

Replacement Parts

140R

	Part Number	Description
1.	**RK 10216**	Mounting Head Kit (1/4”-18 NPTF ports)
2.	**RK 10503**	Head Gasket Kit
3.	Replacement Element (includes #’s 2 and 4)	
	R12S	2 micron
	R12T	10 micron
	R12P	30 micron
4.	**RK 10012**	Bowl O-ring Kit
5.	**RK 10222**	Clear Bowl with Drain Kit
6.	**RK 30476**	Self-venting Drain Kit

Additional Parts (not shown)

10192	Installation Instructions

100 Series

100 Series Overview

Specifications	110A	120A	120B	140R
Maximum Flow Rate: **(with diesel fuel)** **(with gasoline)**	15 GPH (57 LPH) 35 GPH (132 LPH)	15 GPH (57 LPH) N/A	20 GPH (76 LPH) N/A	15 GPH (57 LPH) N/A
Port Size: (SAE J476)	1/4”-18 NPTF	1/4”-18 NPTF	1/4”-18 NPTF	1/4”-18 NPTF
Total Number of Ports: **(total inlets)** **(total outlets)**	4 2 2	4 2 2	4 2 2	2 1 1
Minimum Service Clearance	2.0 in. (5.1 cm)	2.0 in. (5.1 cm)	2.0 in. (5.1 cm)	2.0 in. (5.1 cm)
Center Threads	N/A	M18 x 1.5	M18 x 1.5	M18 x 1.5
Height	6.0 in. (15.2 cm)	6.5 in. (16.5 cm)	8.0 (20.3 cm)	6.0 in. (15.2 cm)
Depth	3.3 in. (8.4 cm)	3.2 in. (8.1 cm)	3.2 in. (8.1 cm)	3.2 in. (8.1 cm)
Width	3.2 in. (8.1 cm)	3.2 in. (8.1 cm)	3.2 in. (8.1 cm)	3.2 in. (8.1 cm)
Weight (dry)	1.3 lb (0.59 kg)	1.1 lb (0.50 kg)	1.2 lb (0.54 kg)	1.1 lb (0.50 kg)
Clean Pressure Drop	0.15 PSI (0.01 bar)	0.15 PSI (0.01 bar)	0.15 PSI (0.01 bar)	0.01 PSI (0.0007 bar)
Max. Allowable Pressure[1]	100 PSI (6.9 bar)	7.0 PSI (0.48 bar)	7.0 PSI (0.48 bar)	7.0 PSI (0.48 bar)
Available Options:[2] **(water sensor probe)** **(heater)**	Yes No	Yes No	Yes No	No No
Water in Bowl Capacity	1.2 oz. (36 ml)	1.8 oz. (52 ml)	1.8 oz. (53 ml)	1.8 oz. (53 ml)
H_2O Removal Efficiency	99%	99%	99%	99%
Operating Temperature	-40° to +200°F (-40° to +93°C)			

Special Notes: [1] Pressure installations are applicable up to maximum PSI shown. Vacuum installations are recommended. [2] Not for use with gasoline applications.

Questions? Contact Technical Support:
800 344 3286 or 209 521 7860 ext. 7555
e-mail: racortech@parker.com

100 Series

Installation Diagram

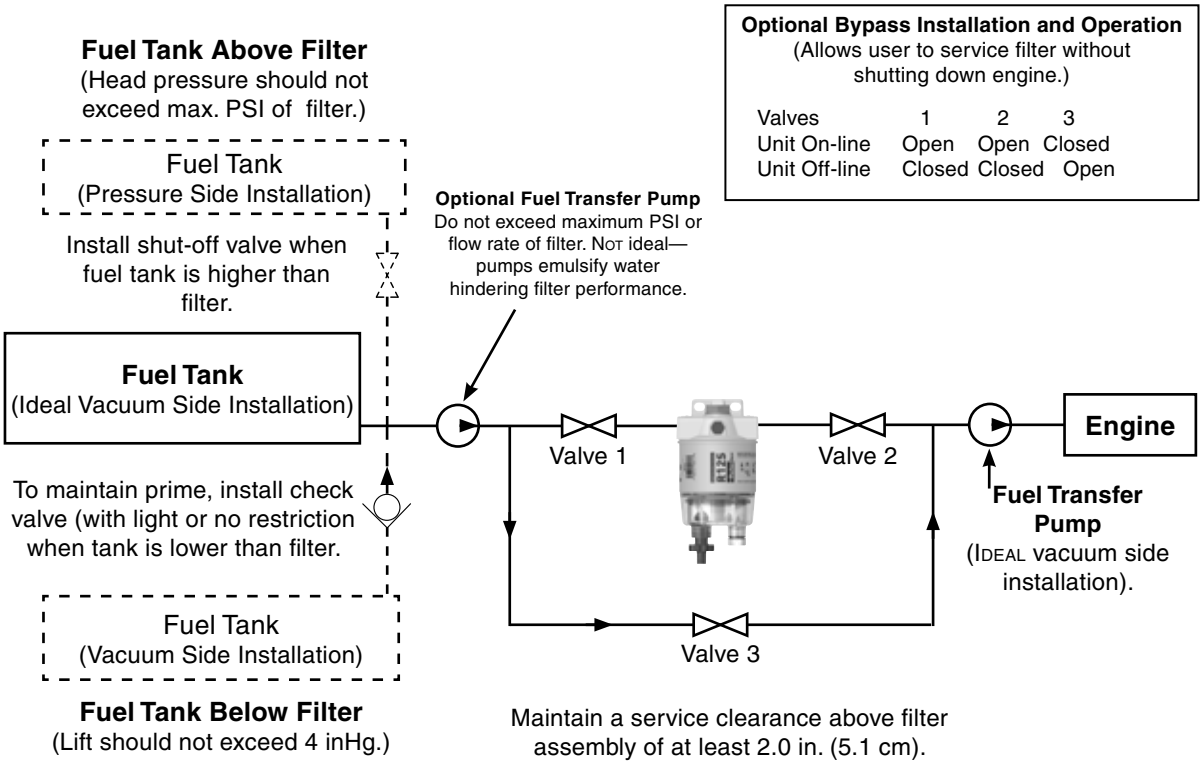

Installation diagram applies to all 100 Series filters. Model 120A shown above. Racor offers hose and fittings to complete this installation—see Accessories.

200 Series

215R

Fuel Filter/Water Separator

The Racor diesel Spin-On 200 Series features a variety of compact sizes to fit in the most cramped engine compartments.

All models are standard with 1/4”-18 NPTF (SAE J476) inlet and outlet fuel ports (14M ports also available) and a unitized mounting bracket.

They also include an in-head primer pump which allows the operator to hand prime the filter and simplifies service procedures.

Specifications	
Maximum Flow Rate: (with gasoline)	15 GPH (57 LPH)
Inlet/Outlet Port Size	1/4”-18 NPTF
Housing Material	Die-cast aluminum head with clear, reusable plastic bowl.
Replacement Element	see element chart
Micron Rating	see element chart
Minimum Service Clearance (below filter)	2.0 in. (5.1 cm)
Height	8.3 in. (21.1 cm)
Depth	4.0 in. (10.2 cm)
Width	3.9 in. (9.9 cm)
Weight (dry)	1.8 lb (0.82 kg)
Maximum Working Pressure[1]	30 PSI (2.07 bar)
Water Removal Efficiency	99%
Clean Pressure Drop	0.12 PSI (0.008 bar)
Case Quantity	6
Ambient Temperature Range	-40° to +200°F (-40° to +93°C)
Maximum Fuel Temperature	190°F (88°C)

Notes: [1]Pressure installations acceptable up to maximum PSI shown. Vacuum installations are recommended.

Questions? Contact Technical Support:
800 344 3286 or 209 521 7860 ext. 7555
e-mail: racortech@parker.com

200 Series

230R
Fuel Filter/Water Separator

Options for the 230R filter/water separator with heater installed: water detection kits (for diesel applications only), vacuum or compound gauges, 12 or 24 volt dc (200 watt) heaters, hose and fittings, and metal bowls. Metal bowls should be specified when filtering fuels in hazardous locations where equipment is exposed to flying gravel and debris.

Specifications	
Maximum Flow Rate: (with gasoline)	30 GPH (114 LPH)
Inlet/Outlet Port Size	1/4”-18 NPTF
Housing Material	Die-cast aluminum head with clear, reusable plastic bowl.
Replacement Element	see element chart
Micron Rating	see element chart
Minimum Service Clearance (below filter)	2.0 in. (5.1 cm)
Height	9.0 in. (22.9 cm)
Depth	4.0 in. (10.2 cm)
Width	3.9 in. (9.9 cm)
Weight (dry)	2.0 lb (0.91 kg)
Maximum Working Pressure[1]	30 PSI (2.07 bar)
Water Removal Efficiency	99%
Clean Pressure Drop	0.31 PSI (0.02 bar)
Case Quantity	6
Ambient Temperature Range	-40° to +200°F (-40° to +93°C)
Maximum Fuel Temperature	190°F (88°C)

Notes: [1]Pressure installations acceptable up to maximum PSI shown. Vacuum installations are recommended.

Questions? Contact Technical Support:
800 344 3286 or 209 521 7860 ext. 7555
e-mail: racortech@parker.com

Parker Racor

200 Series

245R

Fuel Filter/Water Separator

All 200 Series filters feature Spin-On, high-capacity, Aquabloc®II replaceable filter elements which separate water, remove solid contamination, and are available in 2, 10, and 30 micron.

Filtration needs should be based on application, fuel quality, operating climates and maintenance schedules.

The see-through bowls used with these models will not discolor from alcohol, additives, or UV light and have a leak-proof, positive seal, self-venting drain for easy servicing. Water and contamination levels can be seen easily at a glance.

Specifications	
Maximum Flow Rate: (with gasoline)	45 GPH (170 LPH)
Inlet/Outlet Port Size	1/4”-18 NPTF
Housing Material	Die-cast aluminum head with clear, reusable plastic bowl.
Replacement Element	see element chart
Micron Rating	see element chart
Minimum Service Clearance (below filter)	2.0 in. (5.1 cm)
Height	10.5 in. (26.7 cm)
Depth	4.0 in. (10.2 cm)
Width	3.9 in. (9.9 cm)
Weight (dry)	2.2 lb (1.0 kg)
Maximum Working Pressure[1]	30 PSI (2.07 bar)
Water Removal Efficiency	99%
Clean Pressure Drop	0.61 PSI (0.04 bar)
Case Quantity	6
Ambient Temperature Range	-40° to +200°F (-40° to +93°C)
Maximum Fuel Temperature	190°F (88°C)

Notes: [1]Pressure installations acceptable up to maximum PSI shown. Vacuum installations are recommended.

Questions? Contact Technical Support:
800 344 3286 or 209 521 7860 ext. 7555
e-mail: racortech@parker.com

200 Series

200 Series Overview

Specifications	215R	230R	245R
Maximum Flow Rate	15 GPH (57 LPH)	30 GPH (114 LPH)	45 GPH (170 LPH)
Port Size	1/4”-18 NPTF	1/4”-18 NPTF	1/4”-18 NPTF
Total Number of Ports **(total inlets)** **(total outlets)**	3 1 2	3 1 2	3 1 2
Minimum Servace Clearance	2.0 in. (5.1 cm)	2.0 in. (5.1 cm)	2.0 in. (5.1 cm)
Element Threads	1”-14	1”-14	1”-14
Height	8.3 in. (21.1 cm)	9.0 in. (22.9 cm)	10.5 in. (26.7 cm)
Depth	4.0 in. (10.2 cm)	4.0 in. (10.2 cm)	4.0 in. (10.2 cm)
Width	3.9 in. (9.9 cm)	3.9 in. (9.9 cm)	3.9 in. (9.9 cm)
Weight (dry)	1.8 lb (0.82 kg)	2.0 lb (0.91 kg)	2.2 lb (1.0 kg)
Clean Pressure Drop	0.12 PSI (0.008 bar)	0.31 PSI (0.02 bar)	0.61 PSI (0.04 bar)
Max. Allowable Pressure[1]	30 PSI (2.07 bar)	30 PSI (2.07 bar)	30 PSI (2.07 bar)
Available Options:[2] **(water sensor)** **(heater)**	 Yes Yes	 Yes Yes	 Yes Yes
Water in Bowl Capacity	2.2 oz. (65 ml)	2.2 oz. (65 ml)	2.2 oz. (65 ml)
H_2O Removal Efficiency	99%	99%	99%
Operating Temperature	-40° to +200°F (-40° to +93°C)		

Special Notes: [1] Pressure installations are applicable up to the maximum PSI shown. Vacuum installations are recommended. [2] Not for use with gasoline applications.

200 Series

How To Order

(The example below illustrates how part numbers are constructed.)

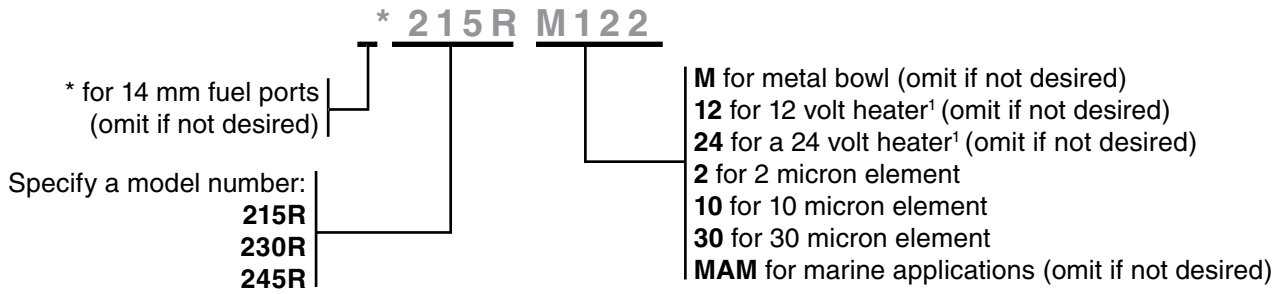

[1] Use with Racor rely kit—see Accessories. Standard fuel ports are 1/4”-18 NPTF (SAE J476). Mounting head includes in-head primer pump.

Replacement Elements

Replacement Elements (seals included)			
Model Number	2 Micron (Final Filtration)	10 Micron (Secondary Filtration)	30 Micron (Primary Filtration)
215R	**R15S**	**R15T**	**R15P**
230R	**R20S**	**R20T**	**R20P**
245R	**R25S**	**R25T**	**R25P**

Questions? Contact Technical Support:
800 344 3286 or 209 521 7860 ext. 7555
e-mail: racortech@parker.com

200 Series

Replacement Parts

	Part Number	Description
1.	**RK20025-01**	Primer Pump Assembly Kit (includes #3)
2.	**RK20046-01**	Mounting Head Kit (with 1/4"-18 NPTF Ports)
	RK20049-01	Mounting Head Kit (with 14 mm x 1.5 Ports)
	RK20717	Mounting Head Kit (no pump, 1/4”-18 NPTF Ports)
3.	**RK 20011-01**	Check Ball and Plastic Cap Kit
	RK 20742	Optional Metal Cap Kit
4.	**RK 10110**	Metal Vent Plug Kit (3/8”-24 SAE threads)
5.	**RK22061**	Beveled Gasket
6.	(various)	Spin-On Elements (see Replacement Element chart)
7.	**RK 22244**	Bowl O-ring Kit
8.	**RK 22350-02**	Clear Bowl Kit (includes #’s 7-10)
	RK 22354-01[1]	(same as above plus a 200 watt, 12 volt dc heater)
	RK 22354-02[1]	(same as above plus a 200 watt, 24 volt dc heater)
	RK 22368	Metal Bowl Kit (includes drain plug and O-ring)
9.	**RK 20022**	Metal Plug (1/2”-20 SAE threads)
	RK 20126	Plastic Plug (1/2”-20 SAE threads)
10.	**RK 30476**	Self-venting Drain Kit

Additional Parts (not shown)

RK 12041	Metal Port Plug Kit (1/4”-18 NPTF threads)
RK 30876[1]	Heater Connector Kit
RK20075-01	Complete Seal Service Kit
22360	Installation Instructions

[1] Do not use on gasoline applications.

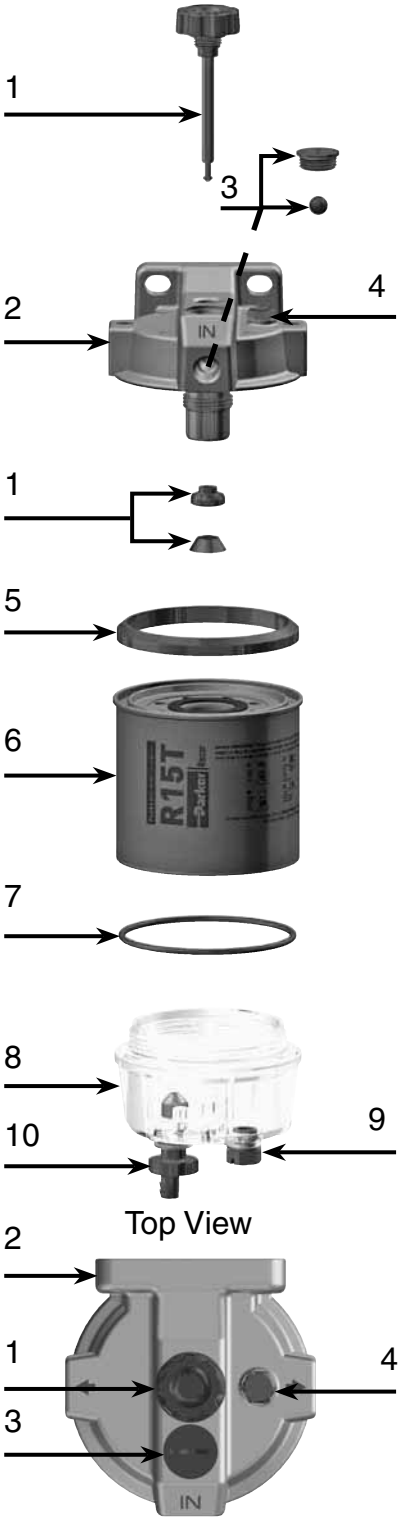

200 Series

Hand Primer Pump Upgrade

Benefits

- **Up to 37% increase in volume of fuel pumped per stroke**
- **Improved strength and alignment**
- **Improved ease of operation**
- **Reduced restriction in fuel flow**
- **Changeable in the field**

This enhancement is possible by increasing the stroke length, by about 1/2″, on the pump shaft and the element threaded adapter. Additionally, the knob and support ring have been redesigned to be more robust.

This change also affects replacement kits for the primer pump and head assemblies. The new style primer pump requires an additional 0.5 inch of space above the assembly (2 inches total) to utilize the added length of stoke; however, the primer pump will perform as always without any mounting modifications.

The new easy-grasp pump knob is larger than current knobs and the color will be changed from white to black to make a clear visual change between current pumps and newer versions.

Old Head Kit RK20046
Old Primer Pump Kit# RK20025

New Head Kit RK20046-01
New Primer Pump Kit# RK20025-01

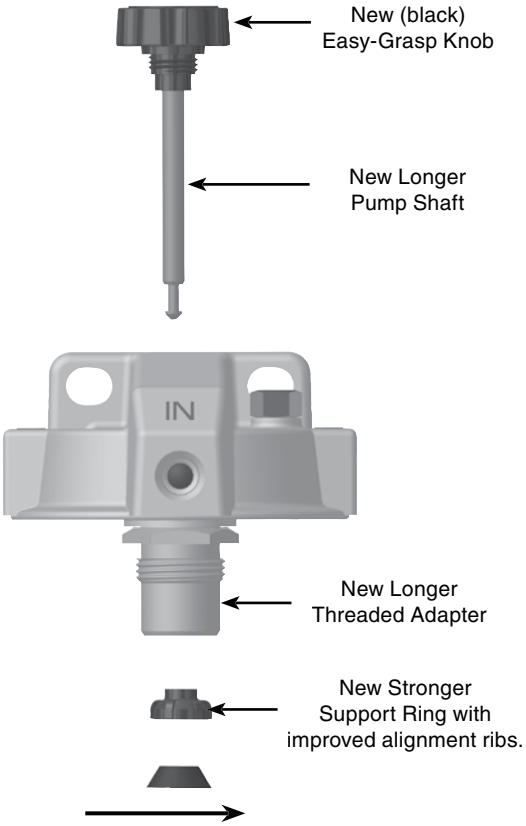

New Primer Pump Assembly
Exploded View

Questions? Contact Technical Support:
800 344 3286 or 209 521 7860 ext. 7555
e-mail: racortech@parker.com

200 Series

Mounting Information

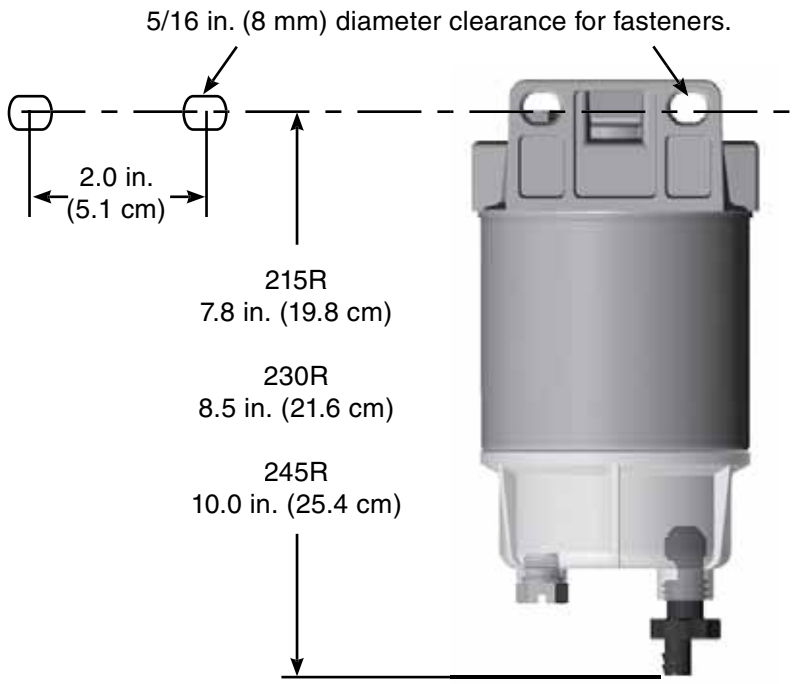

Test Data

(Test results are from controlled laboratory testing. Field results may vary by application.)

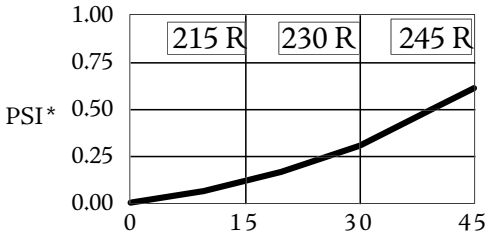

Flow (GPH)
SAE J905 Fuel Flow Restriction

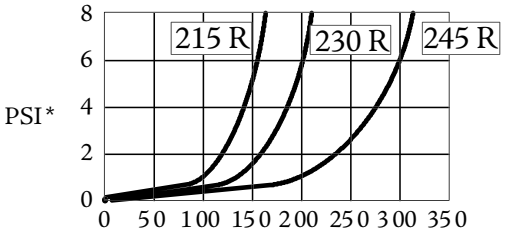

Grams
SAE J905 Solids Capacity
(using: SOFTC-2A; 10mic. elements)

PSI x 2.036=inHg. /PSI x 6.895=kPa

200 Series

Installation Diagram

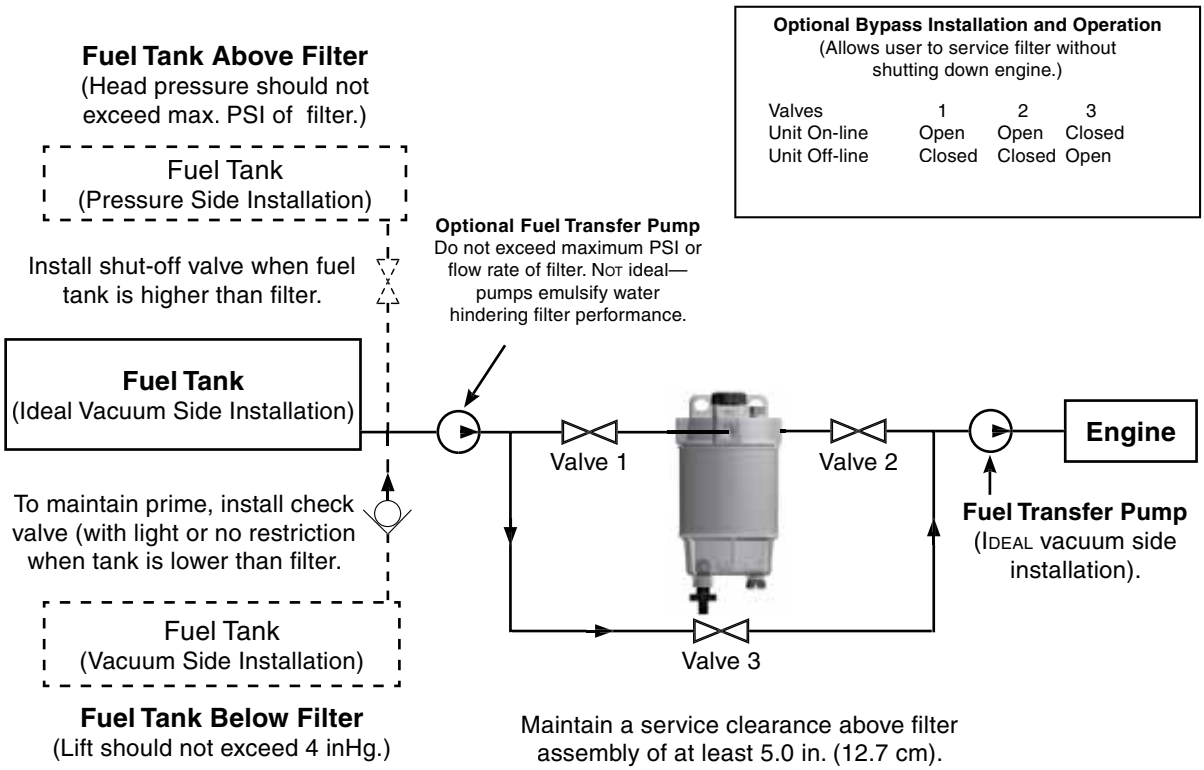

Installation diagram applies to all 200 Series filters. Model **215R** shown above. Racor offers hose and fittings to complete this installation. See Accessories.

215R Series

215R
Fuel Filter/Water Separator

The Racor diesel Spin-On 200 Series features a variety of compact sizes to fit in the most cramped engine compartments.

All models are standard with 1/4”-18 NPTF (SAE J476) inlet and outlet fuel ports (14M ports also available) and a unitized mounting bracket.

They also include an in-head primer pump which allows the operator to hand prime the filter and simplifies service procedures.

Specifications	
Maximum Flow Rate: (with gasoline) (with diesel)	15 GPH (57 LPH)
Inlet/Outlet Port Size	1/4”-18 NPTF
Housing Material	Die-cast aluminum head with clear, reusable plastic bowl.
Replacement Element	see element chart
Micron Rating	see element chart
Minimum Service Clearance (below filter)	2.0 in. (5.1 cm)
Height	8.3 in. (21.1 cm)
Depth	4.0 in. (10.2 cm)
Width	3.9 in. (9.9 cm)
Weight (dry)	1.8 lb (0.82 kg)
Maximum Working Pressure[1]	30 PSI (2.07 bar)
Water Removal Efficiency	99%
Clean Pressure Drop	0.12 PSI (0.008 bar)
Case Quantity	6
Ambient Temperature Range	-40° to +250°F (-40° to +121°C)
Maximum Fuel Temperature	190°F (32°C)

Notes: [1]Pressure installations acceptable up to maximum PSI shown. Vacuum installations are recommended.

Questions? Contact Technical Support:
800 344 3286 or 209 521 7860 ext. 7555
e-mail: racortech@parker.com

Parker Racor

230R Series

230R

Fuel Filter/Water Separator

Onullamcon ullandreet, velit nos accumsandre volore vel eniscipit vel dolor si.
Tat, quis nim quisi. Pat.
Ugue do odolobore minciduisl dignibh essi essequat.
Putpatis nostrud tatin utem vero dunt lore vullan heniam, se feugiat am at et iriuscinim nullaoreet, sit elenibh eugiam eros euguercilla acilisim nissis num doloborer se conullu tpatem inci eugiat.
Sandre dolore magnibh erit iuscip ex et ullandit iure conse duipsummodo odoloborper summy nullam zzrit euisim alisi ting eum quametu erostie ea facilit irit augiate consequ issendit wis alit la corpercing euguer ad tiscidui tem ver sit wisim alit aliquis nim veros delesent inim dolore del exerat.

Specifications	
Maximum Flow Rate: **(with gasoline)** **(with diesel)**	30 GPH (114 LPH)
Inlet/Outlet Port Size	1/4”-18 NPTF
Housing Material	Die-cast aluminum head with clear, reusable plastic bowl.
Replacement Element	see element chart
Micron Rating	see element chart
Minimum Service Clearance (below filter)	2.0 in. (5.1 cm)
Height	9.0 in. (22.9 cm)
Depth	4.0 in. (10.2 cm)
Width	3.9 in. (9.9 cm)
Weight (dry)	2.0 lb (0.91 kg)
Maximum Working Pressure[1]	30 PSI (2.07 bar)
Water Removal Efficiency	99%
Clean Pressure Drop	0.31 PSI (0.02 bar)
Case Quantity	6
Ambient Temperature Range	-40° to +250°F (-40° to +121°C)
Maximum Fuel Temperature	190°F (32°C)

Notes: [1]Pressure installations acceptable up to maximum PSI shown. Vacuum installations are recommended.

Questions? Contact Technical Support:
800 344 3286 or 209 521 7860 ext. 7555
e-mail: racortech@parker.com

245R Series

245R

Fuel Filter/Water Separator

Onullamcon ullandreet, velit nos accumsandre volore vel eniscipit vel dolor si.
Tat, quis nim quisi. Pat.
Ugue do odolobore minciduisl dignibh essi essequat.
Putpatis nostrud tatin utem vero dunt lore vullan heniam, se feugiat am at et iriuscinim nullaoreet, sit elenibh eugiam eros euguercilla acilisim nissis num doloborer se conullu tpatem inci eugiat.
Sandre dolore magnibh erit iuscip ex et ullandit iure conse duipsummodo odoloborper summy nullam zzrit euisim alisi ting eum quametu erostie ea facilit irit augiate consequ issendit wis alit la corpercing euguer ad tiscidui tem ver sit wisim alit aliquis nim veros delesent inim dolore del exerat.

Specifications	
Maximum Flow Rate: **(with gasoline)** **(with diesel)**	45 GPH (170 LPH)
Inlet/Outlet Port Size	1/4”-18 NPTF
Housing Material	Die-cast aluminum head with clear, reusable plastic bowl.
Replacement Element	see element chart
Micron Rating	see element chart
Minimum Service Clearance (below filter)	2.0 in. (5.1 cm)
Height	10.5 in. (26.7 cm)
Depth	4.0 in. (10.2 cm)
Width	3.9 in. (9.9 cm)
Weight (dry)	2.2 lb (1.0 kg)
Maximum Working Pressure[1]	30 PSI (2.07 bar)
Water Removal Efficiency	99%
Clean Pressure Drop	0.61 PSI (0.04 bar)
Case Quantity	6
Ambient Temperature Range	-40° to +250°F (-40° to +121°C)
Maximum Fuel Temperature	190°F (32°C)

Notes: [1]Pressure installations acceptable up to maximum PSI shown. Vacuum installations are recommended.

Questions? Contact Technical Support:
800 344 3286 or 209 521 7860 ext. 7555
e-mail: racortech@parker.com

Parker Racor

245R Series

How To Order

(The example below illustrates how part numbers are constructed.)

*** 215R M122**

* for 14 mm fuel ports (omit if not desired)

Specify a model number:
215R
230R
245R

M for metal bowl (omit if not desired)
12 for 12 volt heater[1] (omit if not desired)
24 for a 24 volt heater[1] (omit if not desired)
2 for 2 micron element
10 for 10 micron element
30 for 30 micron element
MAM for marine applications (omit if not desired)

[1] Use with Racor rely kit—see Accessories. Standard fuel ports are 1/4”-18 NPTF (SAE J476). Mounting head includes in-head primer pump.

Replacement Elements

Replacement Elements (seals included)			
Model Number	2 Micron (Final Filtration)	10 Micron (Secondary Filtration)	30 Micron (Primary Filtration)
215R	**R15S**	**R15T**	**R15P**
230R	**R20S**	**R20T**	**R20P**
245R	**R25S**	**R25T**	**R25P**

Questions? Contact Technical Support:
800 344 3286 or 209 521 7860 ext. 7555
e-mail: racortech@parker.com

245R Series

Replacement Parts

	Part Number	Description
1.	**RK20025-01**	Primer Pump Assembly Kit (includes #3)
2.	**RK20046-01**	Mounting Head Kit (with 1/4-18 NPTF Ports)
	RK20049-01	Mounting Head Kit (with 14 mm x 1.5 Ports)
	RK20717	Mounting Head Kit (no pump, 1/4”-18 NPTF Ports)
3.	**RK20011-01**	Check Ball and Plastic Cap Kit
	RK 20742	Optional Metal Cap Kit
4.	**RK 10110**	Metal Vent Plug Kit (3/8”-24 SAE threads)
5.	**RK 22061**	Beveled Gasket
6.	(various)	Spin-On Elements (see Replacement Element chart)
7.	**RK 22244**	Bowl O-ring Kit
8.	**RK 22350-02**	Clear Bowl Kit (includes #’s 7-10)
	RK 22354-01[1]	(same as above plus a 200 watt, 12 volt dc heater)
	RK 22354-02[1]	(same as above plus a 200 watt, 24 volt dc heater)
	RK 22368	Metal Bowl Kit (includes drain plug and O-ring)
9.	**RK 20022**	Metal Plug (1/2”-20 SAE threads)
	RK 20126	Plastic Plug (1/2”-20 SAE threads)
10.	**RK 30476**	Self-venting Drain Kit

Additional Parts (not shown)

RK 12041	Metal Port Plug Kit (1/4”-18 NPTF threads)
RK 30876[1]	Heater Connector Kit
RK20075-01	Complete Seal Service Kit
22360	Installation Instructions

[1] Do not use on gasoline applications.

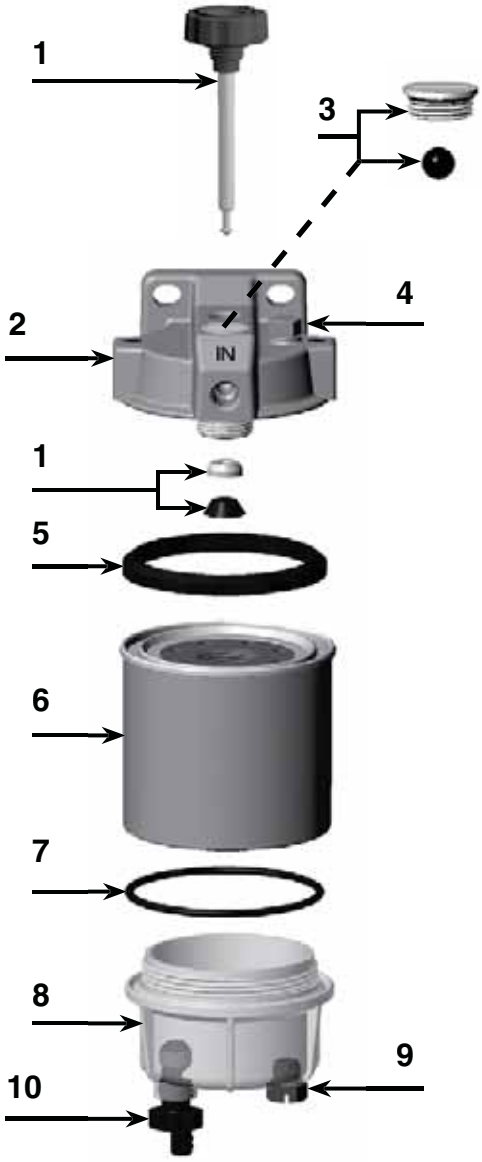

Top View

245R Series

Hand Primer Pump Upgrade

Benefits

- **Up to 37% increase in volume of fuel pumped per stroke**
- **Improved strength and alignment**
- **Improved ease of operation**
- **Reduced restriction in fuel flow**
- **Changeable in the field**

This enhancement is possible by increasing the stroke length, by about 1/2″, on the pump shaft and the element threaded adapter. Additionally, the knob and support ring have been redesigned to be more robust.

This change also affects replacement kits for the primer pump and head assemblies. The new style primer pump requires an additional 0.5 inch of space above the assembly (2 inches total) to utilize the added length of stoke; however, the primer pump will perform as always without any mounting modifications.

The new easy-grasp pump knob is larger than current knobs and the color will be changed from white to black to make a clear visual change between current pumps and newer versions.

Old Head Kit RK20046
Old Primer Pump Kit# RK20025

New Head Kit RK20046-01
New Primer Pump Kit# RK20025-01

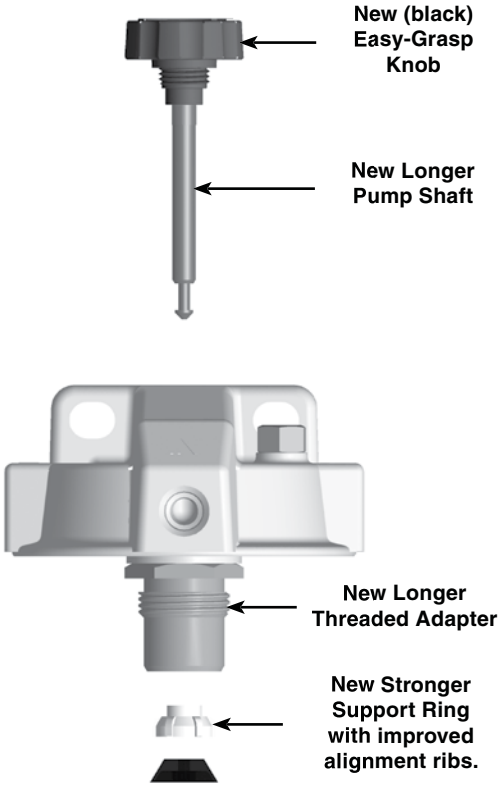

New Primer Pump Assembly Exploded View

245R Series

Customer Interface Drawing

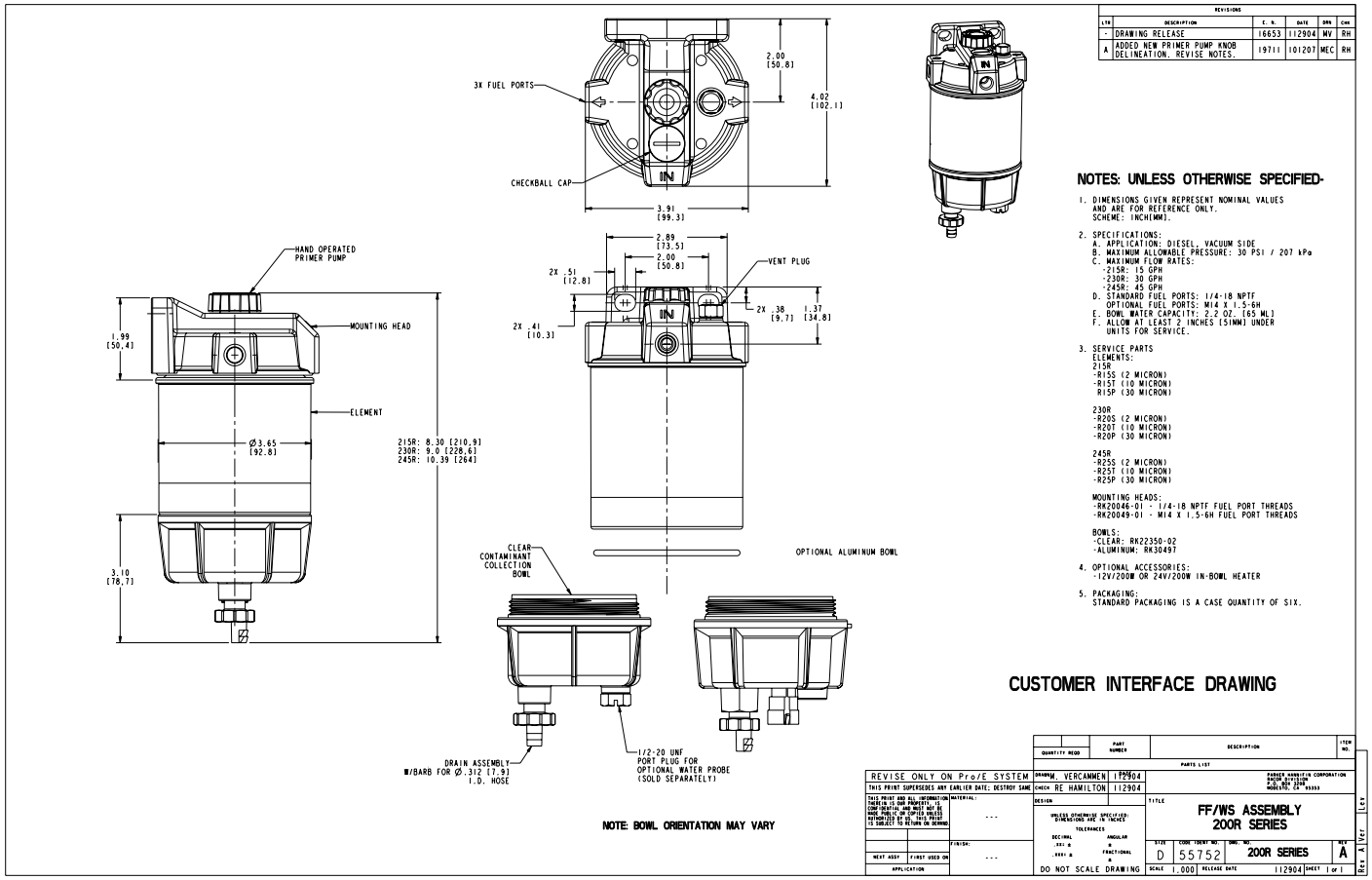

300 Series

325R

Fuel Filter/Water Separator

Racor's 325R Diesel Fuel Filter/ Heater/ Water Separators are specifically designed to handle todays tough fuel system problems. These units feature a standard in-head PTC heater and reusable see-thru contaminant collection bowl. They are different only in flow capacity and element size.

These units are recommended for suction (vacuum) side installations but they may also be installed on the pressure side up to 15 PSI maximum. The die-cast aluminum mounting head features standard 3/8" NPTF fuel ports.

Specifications	
Maximum Flow Rate: (with diesel)	60 GPH (227 LPH)
Inlet/Outlet Port Size	3/8"-18 NPTF (SAE J476)
Replacement Element	see element chart
Micron Rating	see element chart
Minimum Service Clearance (below filter)	2.0 in. (5.1 cm)
Height	9.7 in. (24.6 cm)
Depth	4.8 in. (12.2 cm)
Width	4.4 in. (11.2 cm)
Weight (dry)	3.1 lb (1.4 kg)
Maximum Working Pressure[1]	15 PSI (1.03 bar)
Water Removal Efficiency	99%
Clean Pressure Drop	0.17 PSI (0.01 bar)
Water in Bowl Capacity (with heater)	2.7 oz (82 ml) 2.3 oz (70 ml)
Case Quantity	6
Ambient Temperature Range	-40° to +250°F (-40° to +121°C)
Maximum Fuel Temperature	190°F (88°C)

Notes: [1]Pressure installations acceptable up to maximum PSI shown. Vacuum installations are recommended.

Questions? Contact Technical Support:
800 344 3286 or 209 521 7860 ext. 7555
e-mail: racortech@parker.com

300 Series

330R

Fuel Filter/Water Separator

Racor's 330R Diesel Fuel Filter/ Heater/ Water Separators are specifically designed to handle todays tough fuel system problems. These units feature a standard in-head PTC heater and reusable see-thru contaminant collection bowl. They are different only in flow capacity and element size.

These units are recommended for suction (vacuum) side installations but they may also be installed on the pressure side up to 15 PSI maximum. The die-cast aluminum mounting head features standard 3/8" NPTF fuel ports.

Specifications	
Maximum Flow Rate: (with diesel)	75 GPH (284 LPH)
Inlet/Outlet Port Size	3/8"-18 NPTF (SAE J476)
Replacement Element	see element chart
Micron Rating	see element chart
Minimum Service Clearance (below filter)	2.0 in. (5.1 cm)
Height	11.0 in. (27.9 cm)
Depth	4.8 in. (12.2 cm)
Width	4.4 in. (11.2 cm)
Weight (dry)	3.1 lb (1.4 kg)
Maximum Working Pressure[1]	15 PSI (1.03 bar)
Water Removal Efficiency	99%
Clean Pressure Drop	0.39 PSI (0.03 bar)
Water in Bowl Capacity (with heater)	2.7 oz (82 ml) 2.3 oz (70 ml)
Case Quantity	6
Ambient Temperature Range	-40° to +250°F (-40° to +121°C)
Maximum Fuel Temperature	190°F (88°C)

Notes: [1]Pressure installations acceptable up to maximum PSI shown. Vacuum installations are recommended.

Questions? Contact Technical Support:
800 344 3286 or 209 521 7860 ext. 7555
e-mail: racortech@parker.com

Parker Racor

300 Series

3150R

Fuel Filter/Water Separator

Racor's 3150R Diesel Fuel Filter/ Water Separators are specifically designed to handle high flow applications that require low restriction values.

These robust filters use a reusable see-thru contaminant collection bowl with an in-bowl heater option. The die-cast aluminum mounting head features standard 7/8" UNF O-ring inlet and outlet fuel ports. With a large 3/4" SAE port for easy fuel priming.

These units are recommended for suction (vacuum) side installations but they may also be installed on the pressure side up to 7 PSI maximum pressure.

Specifications	
Maximum Flow Rate: (with diesel)	150 GPH (568 LPH)
Inlet/Outlet Port Size	7/8"-14 UNF (SAE J1926)
Replacement Element	see element chart
Element Threads	1 1/4"-12
Minimum Service Clearance (below filter)	2.0 in. (5.1 cm)
Height	13.6 in. (34.5 cm)
Depth	5.5 in. (14.0 cm)
Width	4.75 in. (12.1 cm)
Weight (dry)	3.6 lb (1.6 kg)
Maximum Working Pressure[1]	7 PSI (0.48 bar)
Water Removal Efficiency	99%
Clean Pressure Drop	0.17 PSI (0.01 bar)
Water in Bowl Capacity (with heater)	2.7 oz (82 ml) 2.3 oz (70 ml)
Case Quantity	6
Ambient Temperature Range	-40° to +250°F (-40° to +121°C)
Maximum Fuel Temperature	190°F (88°C)

Notes: [1]Pressure installations acceptable up to maximum PSI shown. Vacuum installations are recommended.

Questions? Contact Technical Support:
800 344 3286 or 209 521 7860 ext. 7555
e-mail: racortech@parker.com

300 Series

3250R

Fuel Filter/Water Separator

Racor's 3250R Diesel Fuel Filter/ Water Separators are specifically designed to handle high flow applications that require low restriction values.

These robust filters use a reusable see-thru contaminant collection bowl with an in-bowl heater option. The die-cast aluminum mounting head features standard 7/8" UNF O-ring inlet and outlet fuel ports. With a large 3/4" SAE port for easy fuel priming.

These units are recommended for suction (vacuum) side installations but they may also be installed on the pressure side up to 7 PSI maximum pressure.

Specifications	
Maximum Flow Rate: (with diesel)	250 GPH (946 LPH)
Inlet/Outlet Port Size	7/8"-14 UNF (SAE J1926)
Replacement Element	see element chart
Element Threads	1 1/4"-12
Minimum Service Clearance (below filter)	2.0 in. (5.1 cm)
Height	17.3 in. (43.9 cm)
Depth	5.5 in. (14.0 cm)
Width	4.8 in. (12.2 cm)
Weight (dry)	4.6 lb (2.1 kg)
Maximum Working Pressure[1]	7 PSI (0.48 bar)
Water Removal Efficiency	99%
Clean Pressure Drop	1.0 PSI (0.07 bar)
Water in Bowl Capacity (with heater)	2.7 oz (82 ml) 2.3 oz (70 ml)
Case Quantity	6
Ambient Temperature Range	-40° to +250°F (-40° to +121°C)
Maximum Fuel Temperature	190°F (32°C)

Notes: [1]Pressure installations acceptable up to maximum PSI shown. Vacuum installations are recommended.

Questions? Contact Technical Support:
800 344 3286 or 209 521 7860 ext. 7555
e-mail: racortech@parker.com

Parker Racor

300 Series

How to Order

(The example below illustrates how part numbers are constructed.)

325R12-10

Specify a model number:
325R[1, 2], 330R [1, 2]
3150R [2, 3], and 3250R [2, 3]

Includes a 12 volt dc (150 watt) heater:
12 must be in the part number
(omit if desired)

Specify a micron rating:
-02 for 2 micron
-10 for 10 micron
-30 for 30 micron

[1] Filter includes **RK22010** for a 12 volt dc (150 watt) in-head Heater. see installation diagram.
[2] In-bowl heater option: **RK30900** for a 12 volt dc (200 watt) = 16.6 amps, **RK30924** for a 24 volt dc (200 watt) = 8.3 amps. Use with Racor relay kit. - see Accessories.
[3] Standard fuel ports are 7/8”-14 UNF (SAE J1926). 10 micron element included as standard with this filters.

Replacement Elements			
Model Number	2 Micron (Final Filtration)	10 Micron (Secondary Filtration)	30 Micron (Primary Filtration)
325R	S3225S	S3225T	S3225P
330R	S3226S	S3226T	S3226P
3150R	N/A	S3238	S3238P
3250R	S3207S	S3207T	S3207P

300 Series

300 Series Overview

Specifications	325R	330R	3150R	3250R
Maximum Flow Rate	60 GPH (227 LPH)	75 GPH (284 LPH)	150 GPH (568 LPH)	250 GPH (946 LPH)
Port Size	3/8”-18 NPTF (SAE J476)	3/8”-18 NPTF (SAE J476)	7/8”-14 UNF (SAE J1926)	7/8”-14 UNF (SAE J1926)
Total Number of Ports: **Inlets** **Outlets**	2 1 1	2 1 1	2 1 1	2 1 1
Min. Service Clearance	2.0 in. (5.1 cm)	2.0 in. (5.1 cm)	2.0 in. (5.1 cm)	2.0 in. (5.1 cm)
Element Threads	1”-14	1”-14	1 1/4”-12	1 1/4”-12
Height	9.7 in. (24.6 cm)	11.0 in. (27.9 cm)	13.6 in. (34.5 cm)	17.3 in. (43.9 cm)
Depth	4.8 in. (12.2 cm)	4.8 in. (12.2 cm)	5.5 in. (14.0 cm)	5.5 in. (14.0 cm)
Width	4.4 in. (11.2 cm)	4.4 in. (11.2 cm)	4.75 in. (12.1 cm)	4.75 in. (12.1 cm)
Weight (dry)	3.1 lb (1.4 kg)	3.2 lb (1.5 kg)	3.6 lb (1.6 kg)	4.6 lb (2.1 kg)
Clean Pressure Drop	0.17 PSI (0.01 bar)	0.39 PSI (0.03 bar)	0.68 PSI (0.05 bar)	1.0 PSI (0.07 bar)
Max. Allowable Pressure [1]	15 PSI (1.03 bar)	15 PSI (1.03 bar)	7 PSI (0.48 bar)	7 PSI (0.48 bar)
Water in Bowl Capacity (with heater) [2, 3]	2.7 oz (82 ml) 2.3 oz (70 ml)	2.7 oz (82 ml) 2.3 oz (70 ml)	2.7 oz (82 ml) 2.3 oz (70 ml)	2.7 oz (82 ml) 2.3 oz (70 ml)
H_2O Removal Efficiency	99%	99%	99%	99%
Operating Temperature	-40° to +255°F (-40° to +124°C)			

[1]Pressure installations are OK up to maximum PSI shown. Vacuum installations are recommended.
[2]Not for use with gasoline applications.
[3]Maximum power requirements for 3150R and 3250R in-bowl heater option: 12 volt dc (200 watt) = 16.6 amps, 24 volt dc (200 watt) = 8.3 amps. See Accessories for heater relay kits.

300 Series

Optional Accessories

(For models 325R and 330R)

Warning! Racor electrical options are for use on diesel fuel applications ONLY.

In-head 150 Watt PTC Heater
The in-head 150 watt heater is a cold weather starting aid and is thermostatically controlled when power is provided. The heater will automatically turn ON if the fuel temperature drops below 45°F (7°C) and will automatically turn OFF at about 75°F (24°C). Heat is supplied just below the inlet port to melt the wax crystals and allow fuel to efficiently pass through the element. The heater is operated by turning the ignition switch on for a minimum of five minutes prior to starting the engine. See installation diagram on this page.

- **Note: do not smoke or allow open flames near installation to reduce potential for fire.**
- **All wires should be 14 AWG (minimum).**
- **Wire/terminal connections should be soldered and crimped.**
- **Run wires in protected locations; avoid hot surfaces and places that may pinch or rub on wires.**
- **Disconnect battery ground cable before beginning installation.**
- **If vehicle has fused and ignition switch activated terminal on fuse block, then route 14 AWG wire to heater connector wire. This terminal should be capable of 16 amp load and be dedicated only to Racor heater.**
- **A Racor relay is recommended for safest method of installation. Use RK11861 for 12 vdc applications and RK11862 for 24 vdc applications. These kits include an in-line fuse and holder.**
- **An ON/OFF toggle switch may be used to control power to heater relay. This allows operator to cut power during summer use.**
- **Ground Racor filter to chassis by adding a ground wire, if necessary.**

RK 11-1570 (Water Sensor and Element Restriction Gauge)

This optional kit alerts the operator in the event accumulated water (about 80 ml) reaches the water probe or when element restriction has reached 7 inches of mercury. The gauge will illuminate either the 'DRAIN WATER' or 'CHANGE FILTER' lamps, respectfully. An audible buzzer will sound for 2 seconds and then go off. The light(s) will remain on until the condition has been corrected. The sequence will repeat upon each initial power-up. After 2 seconds, both the lights and buzzer will go off (if no water or restriction is present). The gauge resets itself automatically.

- **Mount gauge in instrumentation panel (2 in. [5.1 cm] diameter hole required for mounting) or locate within instrumentation proximity.**
- **Attach wires as shown using provided hardware.**
- **Use provided wire ties to route wires neatly and away from heat or moving surfaces.**

Testing the Installation

With the battery reconnected, turn the ignition switch to 'ON'. The self-diagnosis sequence will occur. Disconnect the vacuum switch and ground the terminal inside the connector. After a short delay, the gauge will activate. Remove the water probe and jump the sensor tips, again the gauge should activate. Failures usually are due to poor connections.

300 Series

Installation Diagram

- **Vacuum Switch**
- **Water Sensor Probe/Gauge**
- **Element Restriction Gauge**

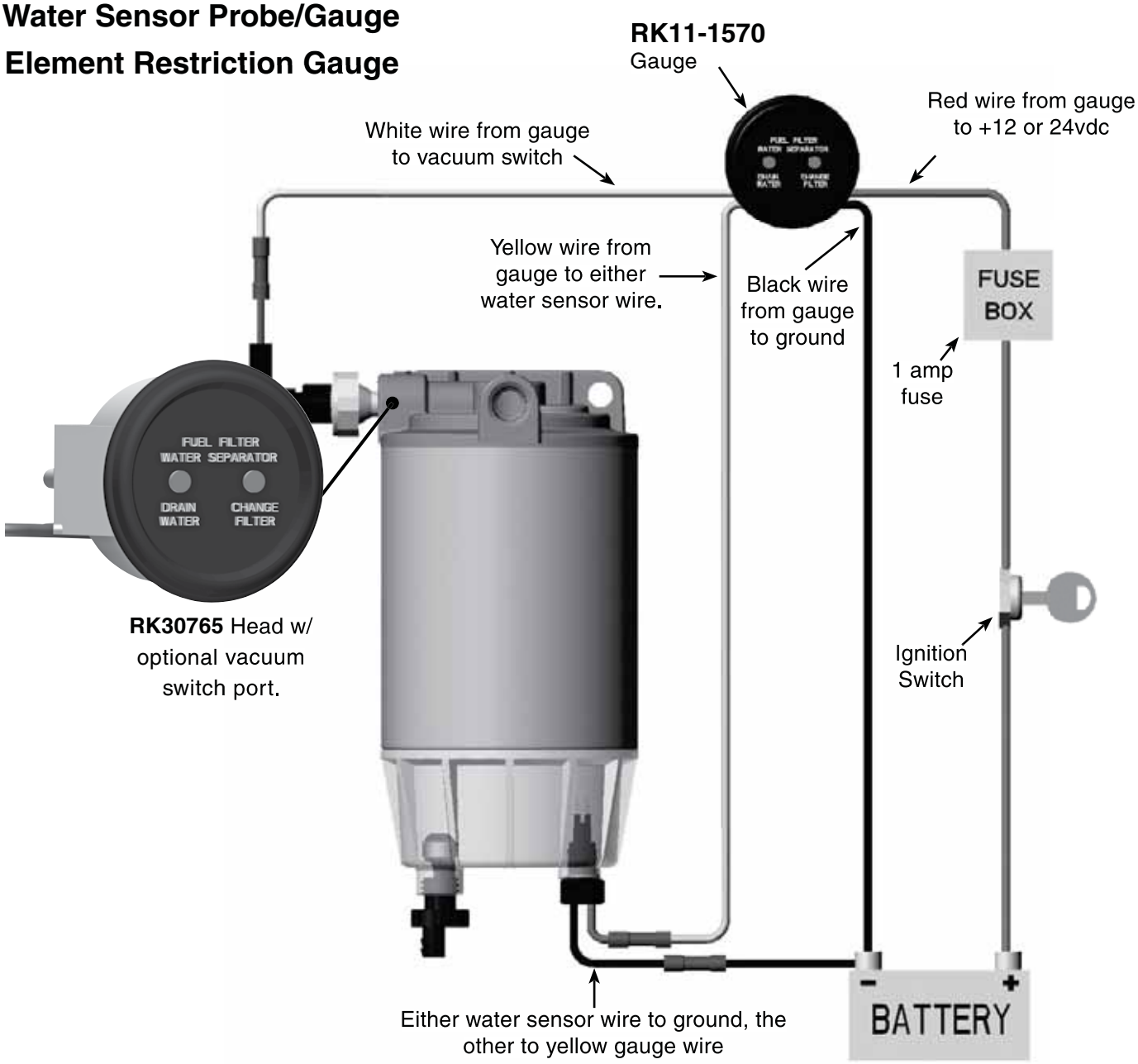

300 Series

Mounting Information

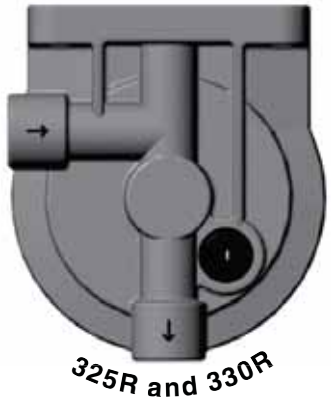

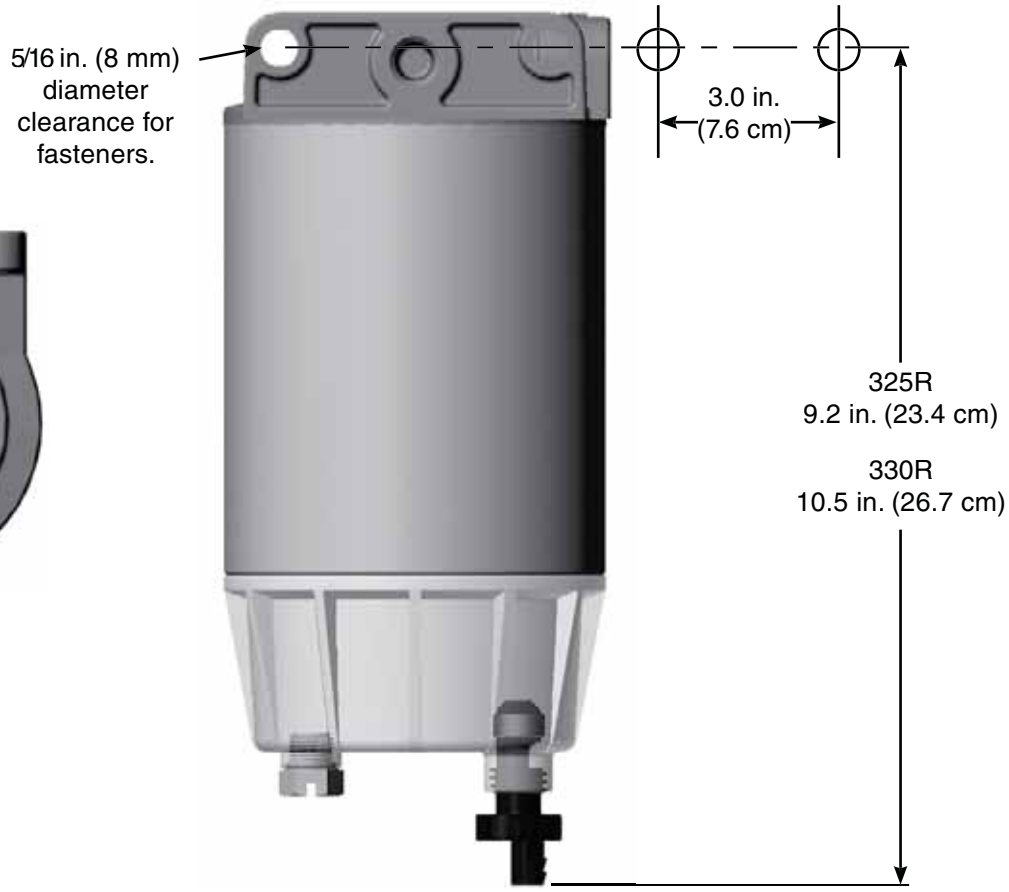

300 Series

Heater Installation Diagram

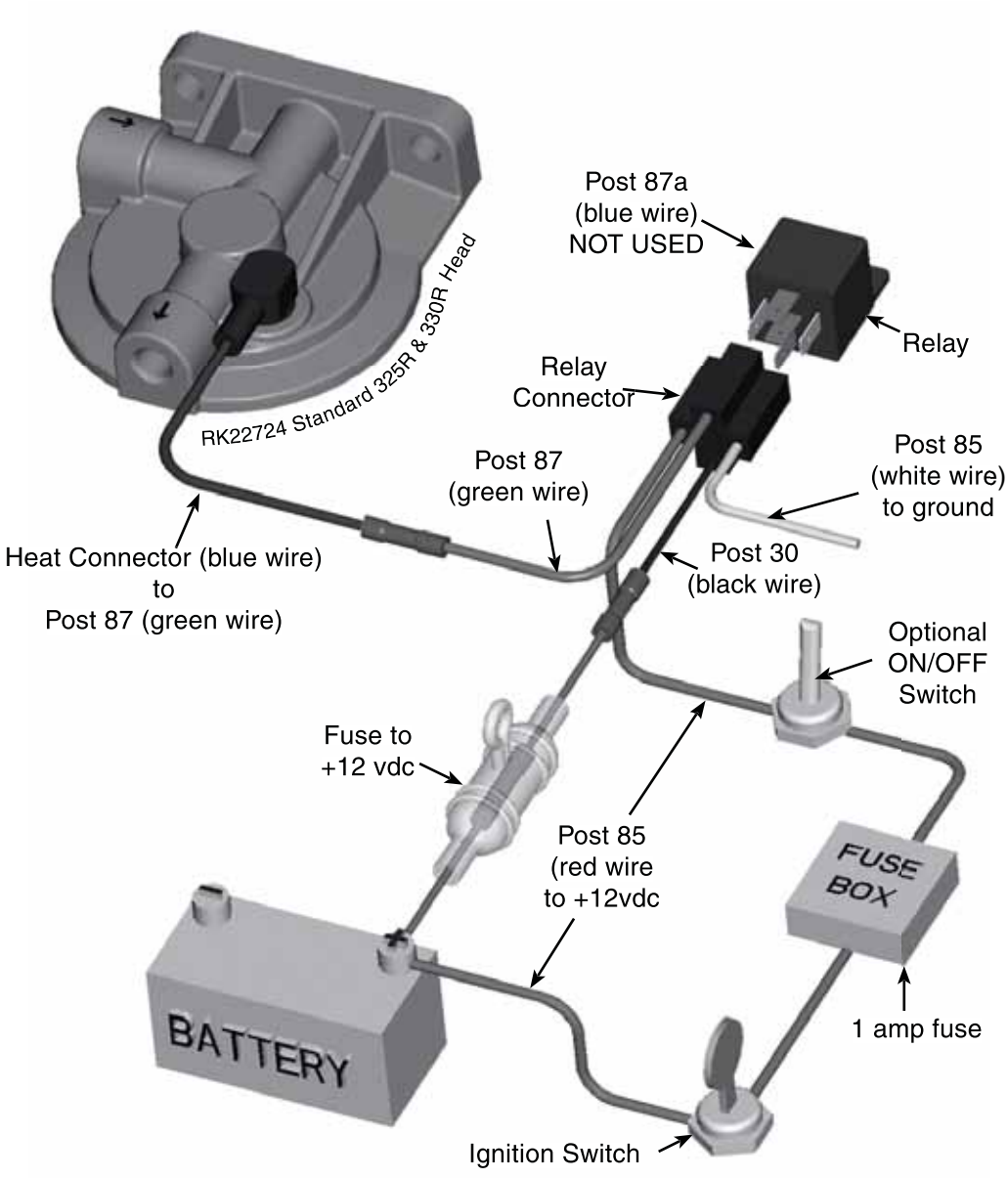

300 Series

Installation Diagram

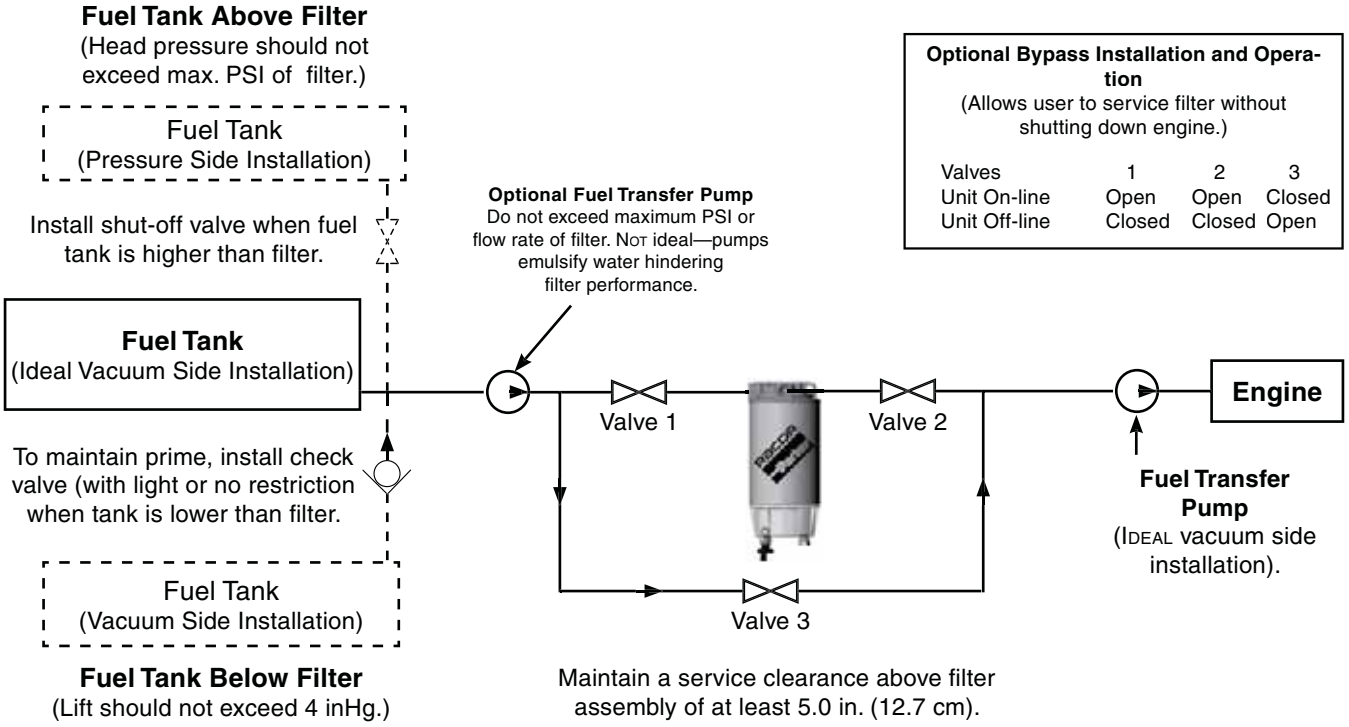

Installation diagram applies to all 300 Series filters. Model 325R shown above. Racor offers hose and fittings to complete this installation - see Accessories.

300 Series

Replacement Parts

	Part Number	Description
1.	**RK 22724**	Standard Mounting Head Kit
	RK 22724-01	Mounting Head Kit (no hole for heater)
2.	**RK 30765**	Mounting Head Kit (with optional vacuum switch port)
3.	**RK 22010**	In-head Heater Kit 12 vdc (150 watt)
4.	**RK 20366**	Heater Connector Kit
5.	**RK 20163**	Optional Vacuum Switch Kit (preset at 7 inHg)
6.	**RK 21030**	Vacuum Switch Connector Kit
7.	Spin-On Elements (includes #'12)	
	325R	
	S3225S	2 Micron
	S3225T	10 Micron
	S3225P	30 Micron
	330R	
	S3226S	2 Micron
	S3226T	10 Micron
	S3226P	30 Micron
		See "Replacement Element" chart
8.	**RK 30063**	Clear Bowl Kit (with self-venting drain, probe plug and O-ring)
9.	**RK 20126**	Plastic Probe Plug Kit (1/2"-20 UNF threads)
10.	**RK 30476**	Self-venting Drain Kit (includes seal)
11.	**22312**	Gasket Pack
	Additional Parts (not shown)	
	30762	Installation Instructions

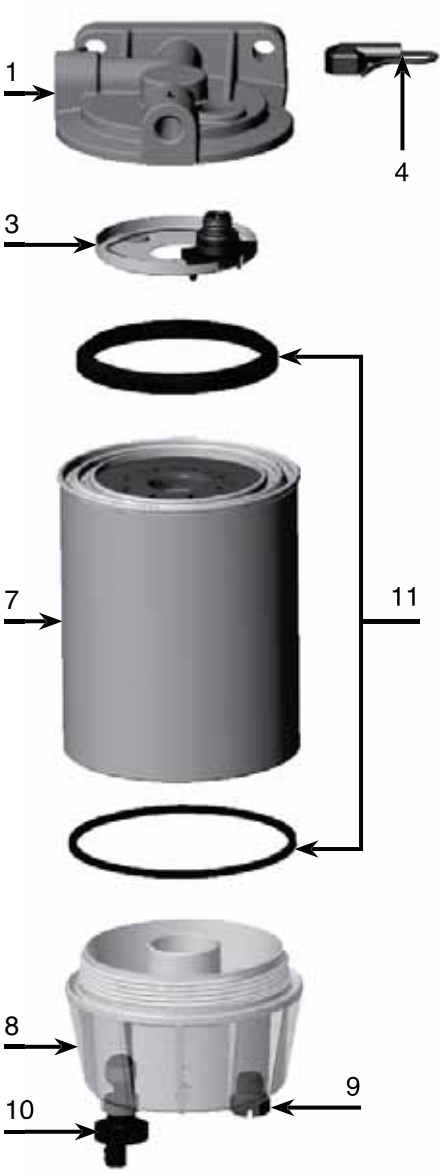

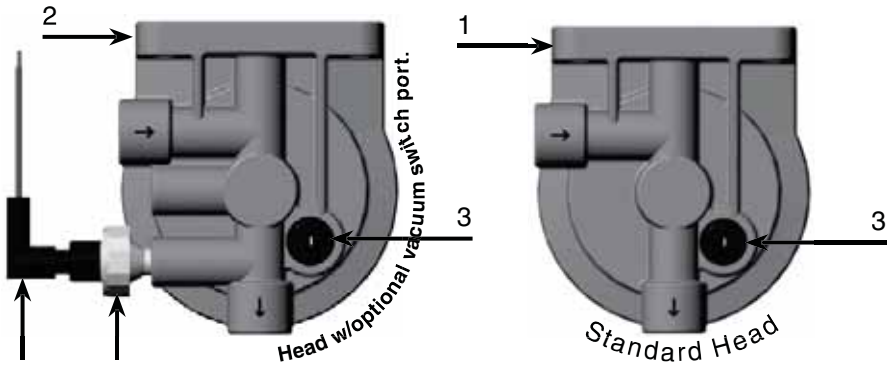

300 Series

Mounting Information

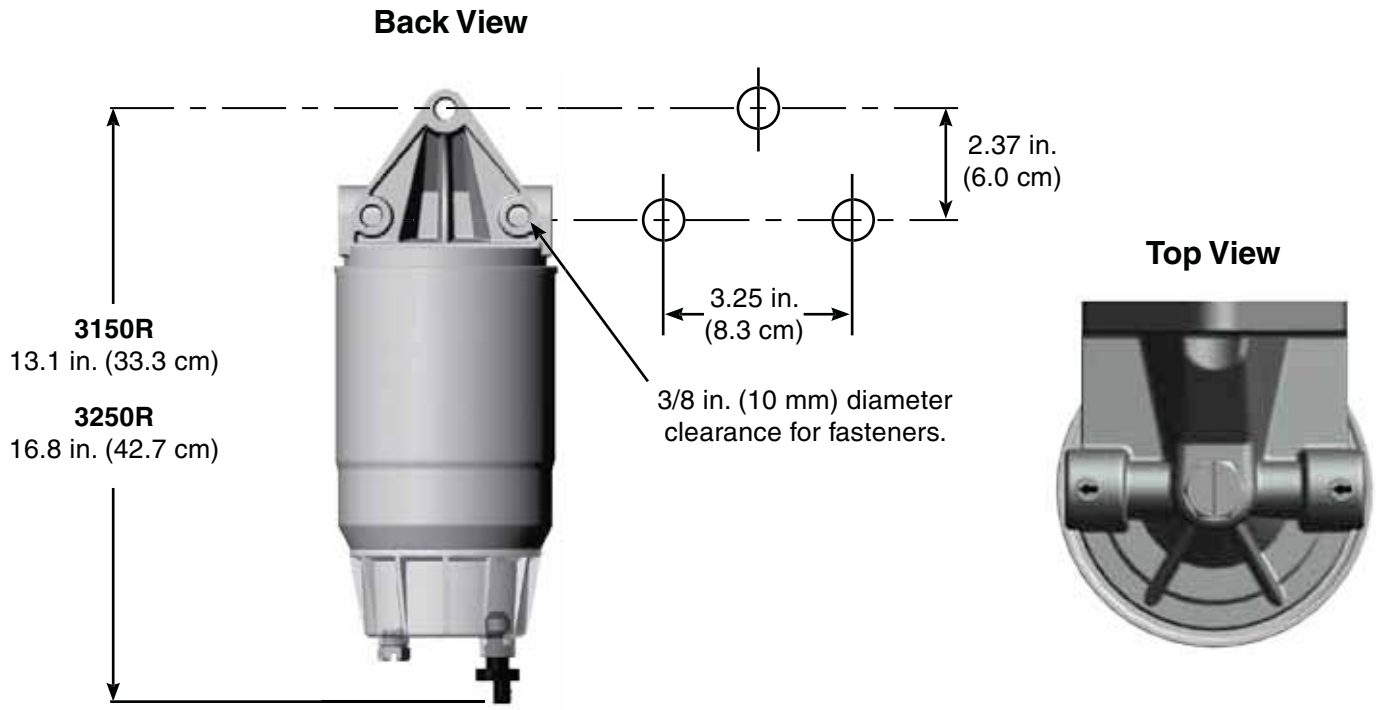

Installation Information

Exercise great caution when installing 300 Series filters to avoid fire hazards. Do not smoke, allow open flame or excessive heat which could ignite a fire. Perform installation in a well ventilated area.

Refer to Mounting Instructions and Installation Diagram and install as follows:

1. **Make sure engine is off and cool to touch.**
2. **Apply thread sealant to NPTF fittings (do not use thread tapes as particles may break off and contribute to clogging element). Apply motor oil or diesel fuel to UNF fitting O-rings. See Accessories for hose and fitting options.**
3. **Thread fittings into appropriate fuel ports and tighten snugly.**
4. **Mount filter vertically in a protected area and away from heat sources. Maintain at least two inches of clearance below filter for servicing.**
5. **Attach fuel lines to filter. Avoid tight bends and rubbing areas when routing hose.**
6. **Prime filter by removing element and bowl together and filling with fuel. Reinstall and tighten snugly by hand only.**
7. **Connect water probe and heater wires, if equipped.**
8. **Verify all connections are tight and start engine. Correct as necessary with engine off.**

Service Instructions

Element replacement frequency is determined by contamination level in fuels. Fuel flow to engine becomes restricted as element gradually plugs with contaminants, resulting in noticeable power loss and/or hard starting. As a guideline, change element every 500 hours, 10,000 miles, every other oil change, annually, or at first indication of power loss, whichever occurs first. Always carry extra replacement elements as one tankful of excessively dirty fuel can quickly plug a filter.

1. **Make sure engine is off and cool to touch.**
2. **Close all fuel valves, if applicable, to make sure excess fuel does not spill during servicing.**
3. **Disconnect water probe and heater connectors.**
4. **Open vent plug on mounting head, if equipped.**
5. **Open drain on bottom of bowl to drain filter.**
6. **Remove bowl and element; dispose properly.**
7. **Lubricate new seals with motor oil or clean fuel.**
8. **Attach bowl to new element.**
9. **Prime filter by filling element (with bowl attached) with fuel.**
10. **Re-install element and bowl and tighten by hand only - do not use tools.**
11. **Connect water probe and heater connectors.**
12. **Open all fuel valves, if applicable.**
13. **Verify all connections are tight and start engine. Correct as necessary with engine off.**

Draining

Water is heavier than fuel and will settle to bottom of bowl and appear different in color if collected in a clear jar. In high humidity environments, check bowl frequently (daily if a poor fuel source is suspected). 300 Series bowls are equipped with a water probe port (water probe sold separately). A water sensing kit will alert the operator of a high water condition in the filter.

Warning! DO NOT use water probe electronics in gasoline applications - an explosion could occur.

1. **Make sure engine is off and cool to touch.**
2. **Open vent plug, if equipped.**
3. **Drain water from filter by opening self-venting drain on bottom of bowl. Close as soon as all water has evacuated.**

Note: if drain is open too long, the entire filter assembly may drain completely of water and fuel.

4. **Tighten drain and vent plug snugly.**
5. **Follow Priming Instructions.**

Priming

1. **Prime filter by removing bowl and element (together) and filling with clean fuel.**
2. **Re-install bowl and element and tighten by hand only - do not use tools.**
3. **Verify all other connections are tight.**
4. **Start engine and check for leaks. Correct as necessary with engine off.**

Trouble Shooting

If a 300 Series filter fails to hold prime, first check vent plug (if equipped), drain valve, fittings and head/element/bowl are properly tightened. Next, check fuel line connections and verify that they are free of pinches or unnecessary bends and check to see if fuel tank strainer (or pick-up tube) is clogged. If problems persist and element is new, call Racor Technical Support at the number listed below.

300 Series

Replacement Parts

3150R and 3250R

	Part Number	Description
1.	**22351**	Vent Plug Kit (3/4”-16 UNF threads)
2.	**RK 31547**	Mounting Head Kit
3.	**N/A**	Head Gasket (sold with element only)
4.	Spin-On Elements (includes #’s 3 & 5)	
	3150R	
	N/A	2 Micron
	S3238	10 Micron
	S3238P	30 Micron
	3250R	
	S3207S	2 Micron
	S3207T	10 Micron
	S3207P	30 Micron
5.	**RK 30965**	Bowl O-ring Kit
6.	**RK 30063**	Clear Bowl Kit (with self-venting drain, probe plug and O-ring)
	RK 30900	Same as RK30063 Plus a 12 vdc (200 watt) Heater
	RK 30925	Same as RK30063 Plus a 24 vdc (200 watt) Heater
7.	**RK 20126**	Plastic Probe Plug Kit (1/2”-20 UNF threads)
8.	**RK 30476**	Self-venting Drain Kit (includes seal)

Additional Parts (not shown)

30942	Installation Instructions

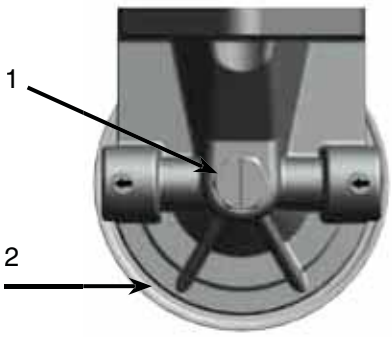

Top View

Questions? Contact Technical Support:
800 344 3286 or 209 521 7860 ext. 7555
e-mail: racortech@parker.com

300 Series

Test Data

325R and 330R

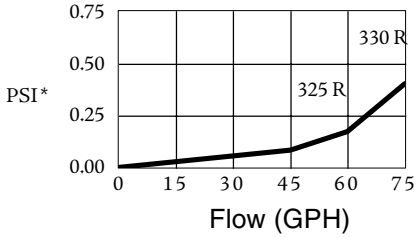

SAE J905 Fuel Flow Restriction

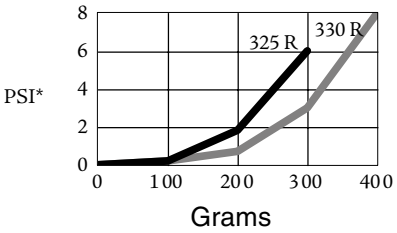

SAE J905 Solids Capacity
(using SOFTC-2A; 10 mic Elements)

3150R and 3250R

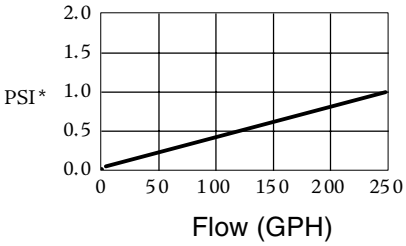

SAE J905 Fuel Flow Restriction

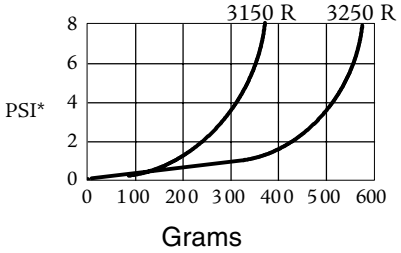

SAE J905 Solids Capacity
(using SOFTC-2A; 10 mic Elements)

(Test results are from controlled laboratory testing. Field results may vary.)
(PSI X 2.036 = inHG) (PSI X 6.895 = kPa)

300RC Series

345RC

Fuel Filter/Fuel Heater/
Water Separator

Racor's 300RC Series Fuel Filter/ Heater/Water Separators are specifically designed to handle today's tough fuel system problems. These units feature a standard high efficiency coolant heat exchanger to heat incoming fuel and are only different in flow capacity and element size.

These units are recommended for suction (vacuum) side installations however the unit may be installed on the pressure side up to 30 PSI maximum. The die-cast aluminum mounting head features standard 3/8" NPTF fuel ports. The coolant heater features hose beads to accept standard 5/8" I.D. hose. Additionally, the coolant heat exchanger may be rotated 360° for installation versatility simply by loosening the center cap at the top of the unit. Either port may serve as the inlet or outlet.

Specifications	
Maximum Flow Rate: (with diesel)	45 GPH (170 LPH)
Inlet/Outlet Port Size **Coolant Heater Ports**	3/8"-18 NPTF 5/8" I.D. Hose Bead
Total Number of Ports:	4
Fuel Inlet	1
Fuel Outlet	1
Coolant Inlet	1
Coolant Outlet	1
Housing Material	Die-cast Aluminum
Element Center Threads	1"-14 SAE
Minimum Service Clearance **(above filter)** **(below filter)**	 5.0 in (12.7 cm) 2.0 in. (5.1 cm)
Height	9.3 in. (23.6 cm)
Depth	4.8 in. (12.2 cm)
Width	4.4 in. (11.2 cm)
Weight (dry)	2.5 lb (1.1 kg)
Maximum Working Pressure[1]	30 PSI (2.1 bar)
Water Removal Efficiency	99%
Clean Pressure Drop	0.10 PSI (0.69 kPa)
Ambient Temperature Range	-40° to +250°F (-40° to +121°C)
Maximum Fuel Temperature	190°F (88°C)

Notes: [1]Pressure installations acceptable up to maximum PSI shown. Vacuum installations are recommended.

Questions? Contact Technical Support:
800 344 3286 or 209 521 7860 ext. 7555
e-mail: racortech@parker.com

300RC Series

360RC

Fuel Filter/Fuel Heater, Water Separator

Racor's 300RC Series Fuel Filter/ Heater/Water Separators are specifically designed to handle today's tough fuel system problems. These units feature a standard high efficiency coolant heat exchanger to heat incoming fuel and are only different in flow capacity and element size.

These units are recommended for suction (vacuum) side installations however the unit may be installed on the pressure side up to 30 PSI maximum. The die-cast aluminum mounting head features standard 3/8" NPTF fuel ports. The coolant heater features hose beads to accept standard 5/8" I.D. hose. Additionally, the coolant heat exchanger may be rotated 360° for installation versatility simply by loosening the center cap at the top of the unit. Either port may serve as the inlet or outlet.

Specifications	
Maximum Flow Rate: (with diesel)	60 GPH (227 LPH)
Inlet/Outlet Port Size **Coolant Heater Port**	3/8"-18 NPTF 5/8" I.D. Hose Bead
Total Number of Ports:	4
Fuel Inlet	1
Fuel Outlet	1
Coolant Inlet	1
Coolant Outlet	1
Housing Material	Die-cast Aluminum
Element Center Threads	1"-14 SAE
Minimum Service Clearance **(above filter)** **(below filter)**	 5.0 in (12.7 cm) 2.0 in. (5.1 cm)
Height	11.0 in. (27.9 cm)
Depth	4.8 in. (12.2 cm)
Width	4.4 in. (11.2 cm)
Weight (dry)	2.7 lb (1.2 kg)
Maximum Working Pressure[1]	30 PSI (2.1 bar)
Water Removal Efficiency	99%
Clean Pressure Drop	0.22 PSI (1.52 kPa)
Ambient Temperature Range	-40° to +250°F (-40° to +121°C)
Maximum Fuel Temperature	190°F (88°C)

Notes: [1]Pressure installations acceptable up to maximum PSI shown. Vacuum installations are recommended.

Questions? Contact Technical Support:
800 344 3286 or 209 521 7860 ext. 7555
e-mail: racortech@parker.com

Parker Racor

300RC Series

390RC

Fuel Filter/Fuel Heater/
Water Separator

Racor's 300RC Series Fuel Filter/ Heater/Water Separators are specifically designed to handle today's tough fuel system problems. These units feature a standard high efficiency coolant heat exchanger to heat incoming fuel and are only different in flow capacity and element size.

These units are recommended for suction (vacuum) side installations however the unit may be installed on the pressure side up to 30 PSI maximum. The die-cast aluminum mounting head features standard 3/8" NPTF fuel ports. The coolant heater features hose beads to accept standard 5/8" I.D. hose. Additionally, the coolant heat exchanger may be rotated 360° for installation versatility simply by loosening the center cap at the top of the unit. Either port may serve as the inlet or outlet.

Specifications	
Maximum Flow Rate: (with diesel)	90 GPH (341 LPH)
Inlet/Outlet Port Size	3/8"-18 NPTF
Coolant Hearer Port	5/8" I.D. Hose Bead
Total Number of Ports:	4
Fuel Inlet	1
Fuel Outlet	1
Coolant Inlet	1
Coolant Outlet	1
Housing Material	Die-cast Aluminum
Element Center Threads	1"-14 SAE
Minimum Service Clearance (above filter)	5.0 in (12.7 cm)
(below filter)	2.0 in. (5.1 cm)
Height	11.8 in. (29.9 cm)
Depth	4.8 in. (12.2 cm)
Width	4.4 in. (11.2 cm)
Weight (dry)	2.9 lb (1.3 kg)
Maximum Working Pressure[1]	30 PSI (2.1 bar)
Water Removal Efficiency	99%
Clean Pressure Drop	0.76 PSI (5.24 kPa)
Ambient Temperature Range	-40° to +250°F (-40° to +121°C)
Maximum Fuel Temperature	190°F (88°C)

Notes: [1]Pressure installations acceptable up to maximum PSI shown. Vacuum installations are recommended.

Questions? Contact Technical Support:
800 344 3286 or 209 521 7860 ext. 7555
e-mail: racortech@parker.com

300RC Series

How to Order

(The examples below illustrate how part numbers are constructed)

3 4 5 R C 1 2 2

Basic Unit
345RC
360RC
390RC

Micron
2, 10, or 30

200 wat Heater*
12 or 24 vdc
12 or 24 must be in part number

*Recommended for use with Racor Heater Relay Kit. See Accessories

Replacement Elements			
Model Number	2 Micron (Final Filtration)	10 Micron (Secondary Filtration)	30 Micron* (Primary Filtration)
345RC	R45S	R45T	R45P
360RC	R60S	R60T	R60P
390RC	R90S	R90T	R90P

*A secondary/final filter is required downstream.

Options

Always keep extra replacement elements on hand as one tank of poor quality fuel can clog a filter.

The reusable clear contaminant collection bowl allows the operator to check contamination build-up at a glance. When water is present, rotate the drain valve open to evacuate contaminants.

In-Bowl Heater: Besides the standard built-on head coolant heat exchanger, a powerful 12 or 24 vdc 200 watt in-bowl heater option is available to quickly warm the element fuel thus providing easier starting and optimum operating efficiency in cold weather or climates.

Water Sensor Probe: When used with a Racor Water Detection Kit, the in-cab module will alert the operator when it's time to drain the bowl. See Accessories.

Note: These electrical accessories are not intended for use with gasoline applications.

Note: These electrical accessories are not intended for use with gasoline applications.

300RC Series

Mounting Instructions

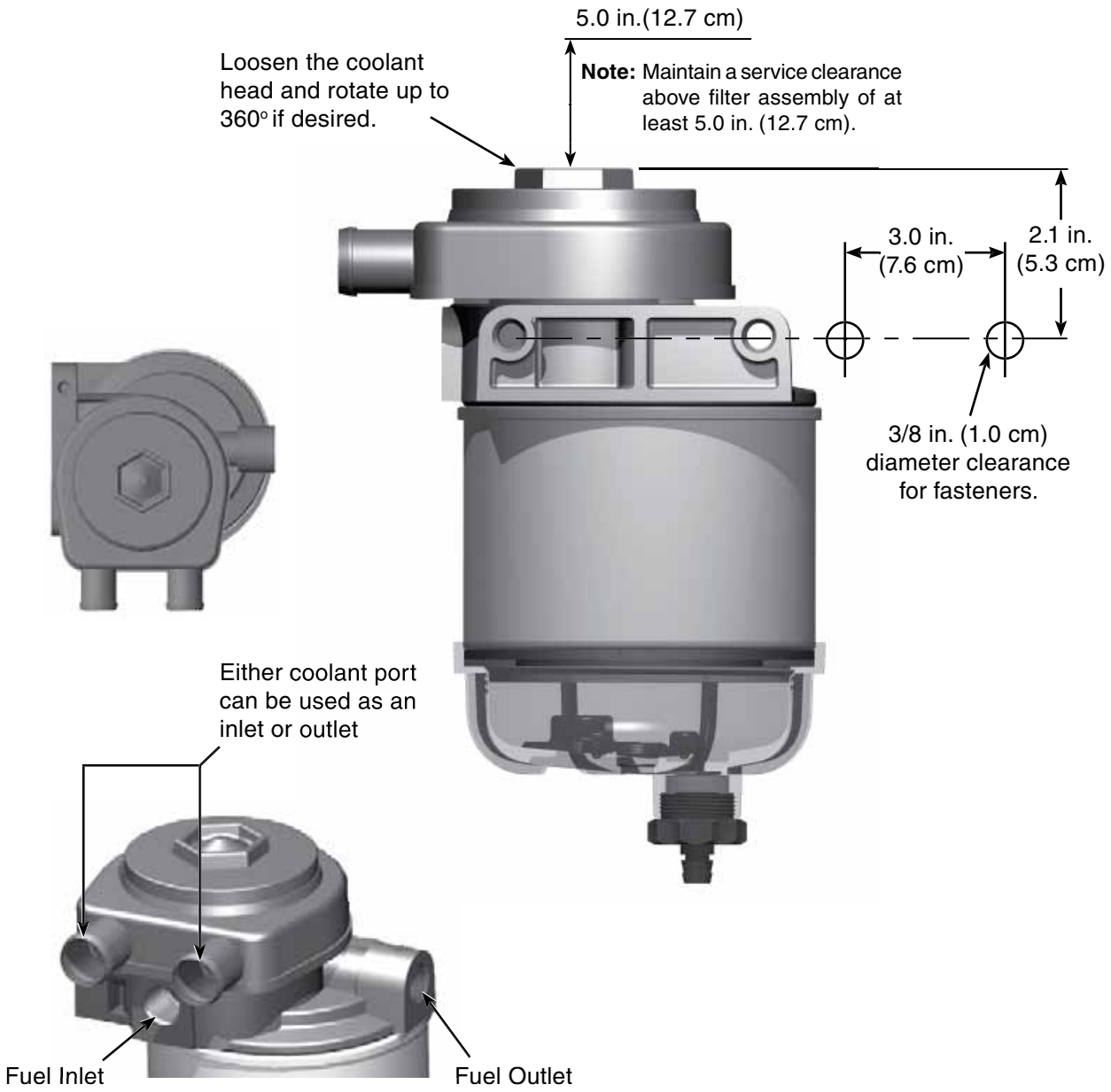

Questions? Contact Technical Support:
800 344 3286 or 209 521 7860 ext. 7555
e-mail: racortech@parker.com

300RC Series

Installation Diagram

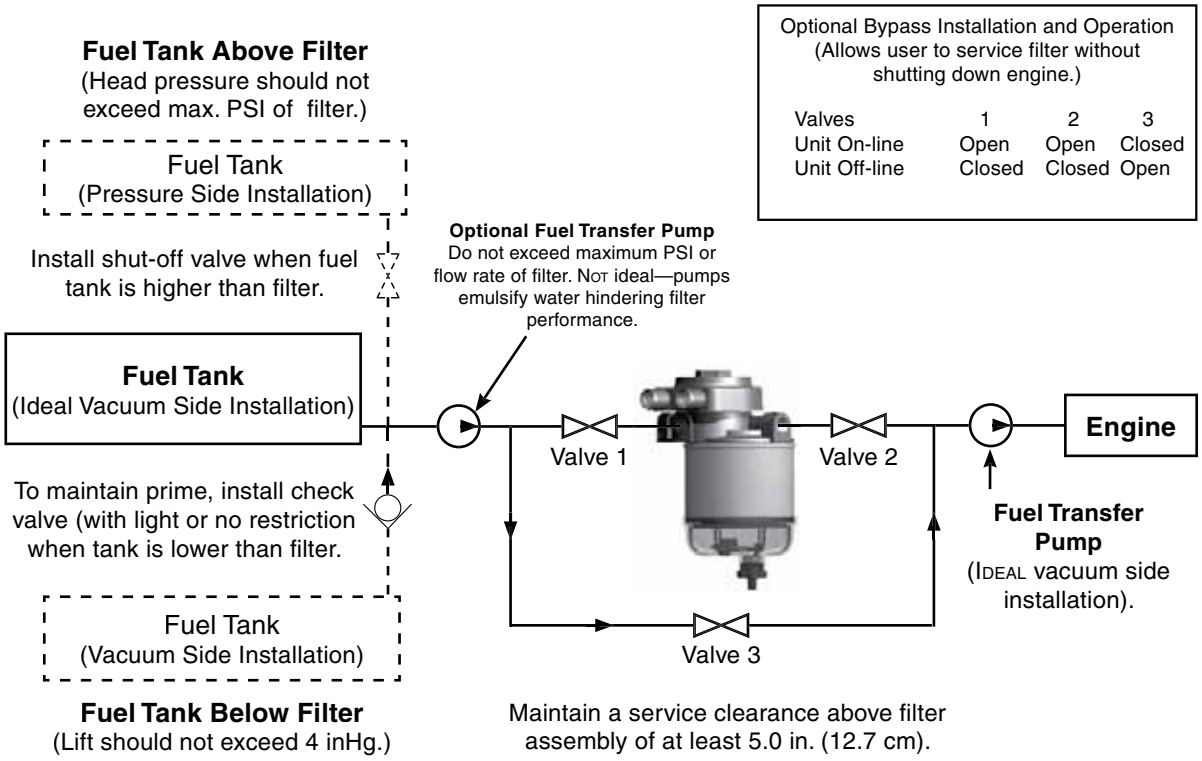

Optional Bypass Installation and Operation (Allows user to service filter without shutting down engine.)

Valves	1	2	3
Unit On-line	Open	Open	Closed
Unit Off-line	Closed	Closed	Open

Installation diagram applies to all 300RC Series filters. Model 345RC shown above.

In-bowl 12 or 24 vdc Heater

The in-bowl 200 watt heater is a cold weather starting aid with an internal automatic thermostat that turns the heater on if the fuel temperature drops below 45°F (7°C). Heat is supplied just below the replacement element to melt the wax crystals and allow fuel to efficiently pass through the element. The heater will automatically turn off at about 75°F (24°C). The heater is operated by turning on the ignition switch for a minimum of five minutes prior to starting the engine. see Replacement Part list.

300RC Series

Coolant Hose Routing Instructions

The Racor coolant heat exchanger is plumbed from the pressure side of the coolant pump and coolant is returned to the suction side of the pump. If a coolant port is not available in the pump or engine block, the coolant may be supplied by tapping into the cab heater coolant supply as shown below. The heat exchanger head may be rotated to facilitate installation by loosening the center cap on top of the unit.

Either heat exchanger port may be used for the inlet or outlet (Valves are customer supplied).
Note: Because of the high heat exchange efficiency of these units, customer supplied manual shut- off valves should be used to regulate coolant to the Racor unit.

Valve Positions:

Open: About equal flow through Racor and cab heater.

Closed: All coolant to the cab heater.

Note: A fuel shut-off valve (customer supplied) is recommended when the fuel tank is mounted higher than the filter.

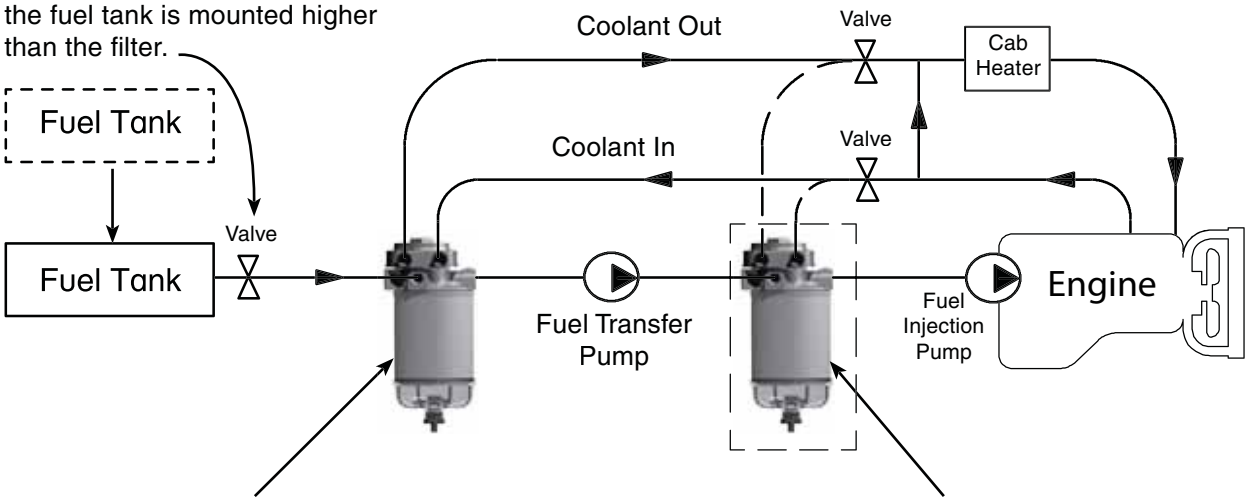

Recommended Location: Suction Side
Filtration: Primary (first) filter - use 30 micron
(If it is the only filter in the system, use 10 or 2 micron)

Acceptable Location: Pressure Side (Must not exceed 30 PSI)
Filtration: Secondary/Final (10 or 2 micron)

Questions? Contact Technical Support:
800 344 3286 or 209 521 7860 ext. 7555
e-mail: racortech@parker.com

300RC Series

Replacement Parts

345RC, 360RC and 390RC

	Part Number	Description
1.	**RK 30234**	Heat Exchanger Cap Kit
2.	**RK 10012**	Cap / Heat Exchanger O-ring
3.	**N/A**	Heat Exchanger Kit
4.	**30237**	Square-cut Gasket
5.	**RK 22365-01**	Head Kit
6.	**21501**	Gasket Pack

Replacement Elements (includes #6)

7.	**R45S**	2 micron
	R45T	10 micron
	R45P	30 micron
	R60S	2 micron
	R60T	10 micron
	R60P	30 micron
	R90S	2 micron
	R90T	10 micron
	R90P	30 micron
8.	**RK 22333**	Bowl gasket Kit
9.	**RK 21113-13-06**	Clear Bowl Kit, 9/16” SAE Ports
	RK 21113-13	Bowl Kit with Probe 9/16” SAE Ports
	RK 22266-01	Bowl Kit with Probe &12 vdc Heater
	RK 22266-02	Bowl Kit with Probe & 24 vdc Heater
	RK 22266-03	Bowl Kit with Heater 12 vdc
	RK 22266-04	Bowl Kit with Heater 24 vdc
10.	**RK 22329**	Water Drain Kit

Additional Parts (not shown)

RK 21199	Water Sensor Connector Kit
RK 22323	Heater Connector Kit
RK 22493	Complete Seal Service Kit
RK 21145[1]	Water Probe Only 9/16” SAE
RK 11-1679	Port Plug 9/16” SAE

[1]*Must be used with a Water Detection Kit. see Accessories section.*

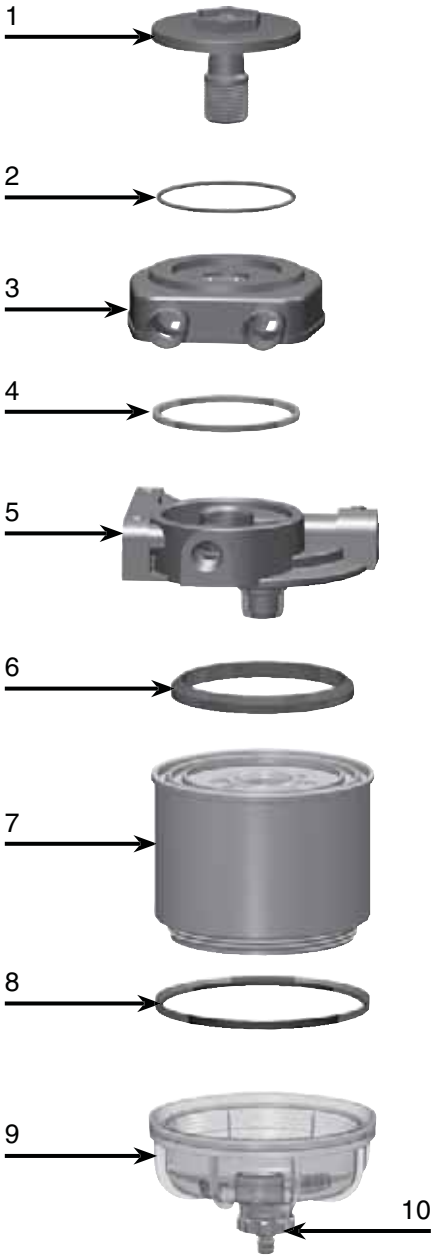

300RC Series

Test Data

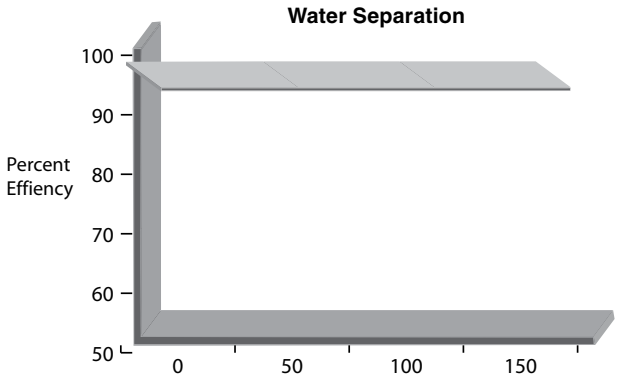

Time (minutes)
SAE J1839 Water
Separation @ 90 gph

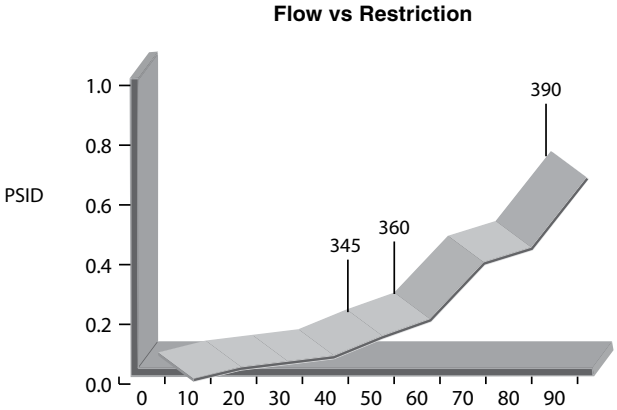

Flow (gph)
SAE J905 Fuel
Flow Restriction

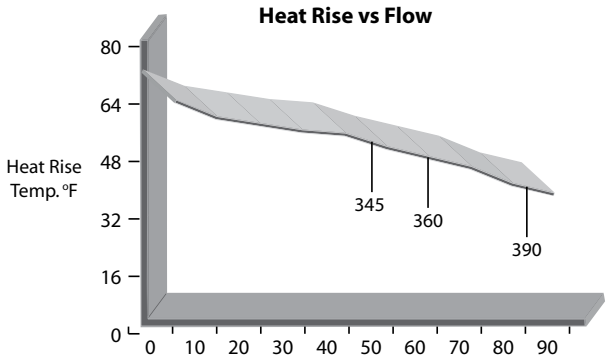

Flow Rate in GPH
Givens: Diesel fuel temperature; -10°F
Coolant temperature; +190°F @ 4 gpm.

(Test results are from controlled laboratory testing. Field results may vary.)
(PSI X 2.036 = inHG) (PSI X 6.895 = kPa)

300RC Series

300RC Series Overview

Specifications	345RC	360RC	390RC
Maximum Flow Rate	45 GPH (170 LPH)	60 GPH (227 LPH)	90 GPH (341 LPH)
Fuel Port Size (SAE J476) **Coolant Port Size**	3/8”-18 NPTF Fits 5/8” I.D. Hose	3/8”-18 NPTF Fits 5/8” I.D. Hose	3/8”-18 NPTF Fits 5/8” I.D. Hose
Total Number of Ports: **Fuel Inlet** **Fuel Outlet** **Coolant Inlet** **Coolant Outlet**	4 1 1 1 1	4 1 1 1 1	4 1 1 1 1
Min. Service Clearance **Above** **Below**	 5.0 in (12.7 cm) 2.0 in. (5.1 cm)	 5.0 in (12.7 cm) 2.0 in. (5.1 cm)	 5.0 in (12.7 cm) 2.0 in. (5.1 cm)
Element Center Threads	1”-14 SAE	1”-14 SAE	1”-14 SAE
Height	9.3 in. (23.6 cm)	11.0 in. (27.9 cm)	11.8 in. (29.9 cm)
Depth	4.8 in. (12.2 cm)	4.8 in. (12.2 cm)	4.8 in. (12.2 cm)
Width	4.4 in. (11.2 cm)	4.4 in. (11.2 cm)	4.4 in. (11.2 cm)
Weight (dry)	2.5 lb (1.1 kg)	2.7 lb (1.2 kg)	2.9 lb (1.3 kg)
Clean Pressure Drop	0.10 PSI (0.69 kPa)	0.22 PSI (1.52 kPa)	0.76 PSI (5.24 kPa)
Maximum Pressure	30 PSI (207 kPa)	30 PSI (207 kPa)	30 PSI (207 kPa)
Water in Bowl Capacity (with heater)	4.0 oz (118 ml) 3.5 oz (104 ml)	4.0 oz (118 ml) 3.5 oz (104 ml)	4.0 oz (118 ml) 3.5 oz (104 ml)
H_2O Removal Efficiency	99%	99%	99%
Operating Temperature	-40° to +255°F (-40° to +124°C)		

400 Series

445R

Fuel Filter/Water Separator

445R Spin-On fuel filter/water separators feature a hand (palm) operated fuel priming pump which simplifies service procedures and yields extremely low flow resistance due to its unique pump bypass characteristic.

These filters also feature multiple fuel ports (two inlets and two outlets) and a unitized mounting bracket for installation convenience. Inlet and outlet threads are 3/8”-18 NPTF (SAE J476). These filter assemblies provide flexibility during mounting to fit any engine application.

Specifications	
Maximum Flow Rate: (with diesel)	45 GPH (170 LPH)
Inlet/Outlet Port Size	3/8”-18 NPTF (SAE J476)
Housing Material	Cast Aluminum
Replacement Element	See Element Chart
Minimum Service Clearance (below filter)	2.0 in. (5.1 cm)
Height	9.3 in. (23.6 cm)
Depth	4.5 in. (11.4 cm)
Width	4.8 in. (12.1 cm)
Weight (dry)	2.5 lb (1.1 kg)
Maximum Working Pressure[1]	30 PSI (2.07 bar)
Water Removal Efficiency	99%
Clean Pressure Drop	0.17 PSI (0.01 bar)
Available Options:[2]	
(water sensor)	Yes
(heater)[3]	Yes
Case Quantity	6
Ambient Temperature Range	-40° to +250°F (-40° to +121°C)
Maximum Fuel Temperature	190°F (32°C)

Notes: [1]Pressure installations acceptable up to maximum PSI shown. Vacuum installations are recommended.
[2]Do not use with gasoline applications.

Questions? Contact Technical Support:
800 344 3286 or 209 521 7860 ext. 7555
e-mail: racortech@parker.com

400 Series

460R

Fuel Filter/Water Separator

460R Spin-On fuel filter/water separators feature a hand (palm) operated fuel priming pump which simplifies service procedures and yields extremely low flow resistance due to its unique pump bypass characteristic.

These filters also feature multiple fuel ports (two inlets and two outlets) and a unitized mounting bracket for installation convenience. Inlet and outlet threads are 3/8”-18 NPTF (SAE J476). These filter assemblies provide flexibility during mounting to fit any engine application.

Specifications	
Maximum Flow Rate: (with diesel)	60 GPH (227 LPH)
Inlet/Outlet Port Size	3/8”-18 NPTF (SAE J476)
Housing Material	Cast Aluminum
Replacement Element	See Element Chart
Minimum Service Clearance (below filter)	2.0 in. (5.1 cm)
Height	11.0 in. (27.9 cm)
Depth	4.5 in. (11.4 cm)
Width	4.8 in. (12.1 cm)
Weight (dry)	2.7 lb (1.2 kg)
Maximum Working Pressure[1]	30 PSI (2.07 bar)
Water Removal Efficiency	99%
Clean Pressure Drop	0.39 PSI (0.03 bar)
Available Options:[2]	
(water sensor)	Yes
(heater)[3]	Yes
Case Quantity	6
Ambient Temperature Range	-40° to +250°F (-40° to +121°C)
Maximum Fuel Temperature	190°F (32°C)

Notes: [1]Pressure installations acceptable up to maximum PSI shown. Vacuum installations are recommended.
[2]Do not use with gasoline applications.

Questions? Contact Technical Support:
800 344 3286 or 209 521 7860 ext. 7555
e-mail: racortech@parker.com

Parker Racor

400 Series

490R

Fuel Filter/Water Separator

490R Spin-On fuel filter/water separators feature a hand (palm) operated fuel priming pump which simplifies service procedures and yields extremely low flow resistance due to its unique pump bypass characteristic.

These filters also feature multiple fuel ports (two inlets and two outlets) and a unitized mounting bracket for installation convenience. Inlet and outlet threads are 3/8”-18 NPTF (SAE J476). These filter assemblies provide flexibility during mounting to fit any engine application.

Specifications	
Maximum Flow Rate: (with diesel)	90 GPH (341 LPH)
Inlet/Outlet Port Size	3/8”-18 NPTF (SAE J476)
Housing Material	Cast Aluminum
Replacement Element	See Element Chart
Minimum Service Clearance (below filter)	2.0 in. (5.1 cm)
Height	11.8 in. (30.0 cm)
Depth	4.5 in. (11.4 cm)
Width	4.8 in. (12.1 cm)
Weight (dry)	2.9 lb (1.3 kg)
Maximum Working Pressure[1]	30 PSI (2.07 bar)
Water Removal Efficiency	99%
Clean Pressure Drop	0.95 PSI (0.07 bar)
Available Options:[2]	
(water sensor)	Yes
(heater)[3]	Yes
Case Quantity	6
Ambient Temperature Range	-40° to +250°F (-40° to +121°C)
Maximum Fuel Temperature	190°F (32°C)

Notes: [1]Pressure installations acceptable up to maximum PSI shown. Vacuum installations are recommended.
[2]Do not use with gasoline applications.

Questions? Contact Technical Support:
800 344 3286 or 209 521 7860 ext. 7555
e-mail: racortech@parker.com

400 Series

4120R

Fuel Filter/Water Separator

4120R Spin-On fuel filter/water separators feature a hand (palm) operated fuel priming pump which simplifies service procedures and yields extremely low flow resistance due to its unique pump bypass characteristic.

These filters also feature multiple fuel ports (two inlets and two outlets) and a unitized mounting bracket for installation convenience. Inlet and outlet threads are 3/4”-16 UNF (SAE J1926). These filter assemblies provide flexibility during mounting to fit any engine application.

Specifications	
Maximum Flow Rate: (with diesel)	120 GPH (454 LPH)
Inlet/Outlet Port Size	3/4”-16 SAE (SAE J1926)
Housing Material	Cast Aluminum
Replacement Element	See Element Chart
Minimum Service Clearance (below filter)	2.0 in. (5.1 cm)
Height	15.0 in. (38.1 cm)
Depth	4.5 in. (11.4 cm)
Width	4.8 in. (12.1 cm)
Weight (dry)	3.9 lb (1.8 kg)
Maximum Working Pressure[1]	15 PSI (1.03 bar)
Water Removal Efficiency	99%
Clean Pressure Drop	0.85 PSI (0.06 bar)
Available Options:[2]	
(water sensor)	Yes
(heater)[3]	Yes
Case Quantity	6
Ambient Temperature Range	-40° to +250°F (-40° to +121°C)
Maximum Fuel Temperature	190°F (32°C)

Notes: [1]Pressure installations acceptable up to maximum PSI shown. Vacuum installations are recommended.
[2]Do not use with gasoline applications.

Questions? Contact Technical Support:
800 344 3286 or 209 521 7860 ext. 7555
e-mail: racortech@parker.com

Parker Racor

400 Series

How to Order

(The examples below illustrate how part numbers are constructed)

*	490R	12	2
Add an * for optional 16 mm fuel ports[1] (omit if not desired)	Specify a model number: 445R, 460R, 490R, or 4120R.	Add 12 or 24 for a 12 or 24 volt dc heater[2]. (omit if not desired)	Specify a micron rating: 2, 10, or 30.
[1] Standard fuel ports are 3/8”-18 NPTF (445R, 460R and 490R) and ¾”-16 UNF (4120R). [2] Use with Racor relay kit - see Accessories.			

Replacement Elements			
Model Number	2 Micron (Final Filtration)	10 Micron (Secondary Filtration)	30 Micron (Primary Filtration)
445R	R45S or R47S	R45T	R45P
460R	R60S	R60T	R60P
490R	R90S	R90T	R90P
4120R	R120S	R120T	R120P

Optional Dual Media Filter

Dual-Layer media offers enhanced high dirt-holding capacity, and extended filter life. Dual-Layer media ensures more complete removal of all size contaminants. The R47S filter replaces the R45S Spin-On element, and provides removal efficiencies of 99.98% nominal on 2 micron particles. Still much greater than the 50-90% efficiency of most single-stage filters.

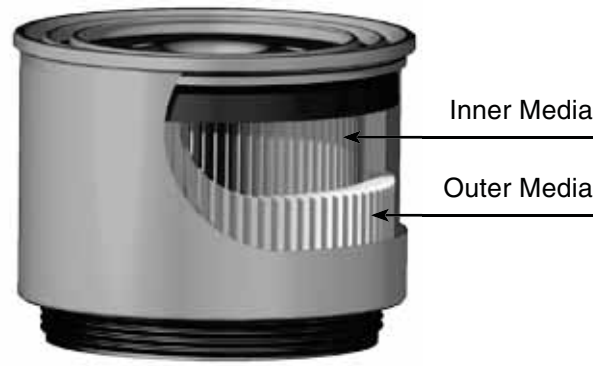

R47S Dual Media Filter

400 Series

Mounting Information

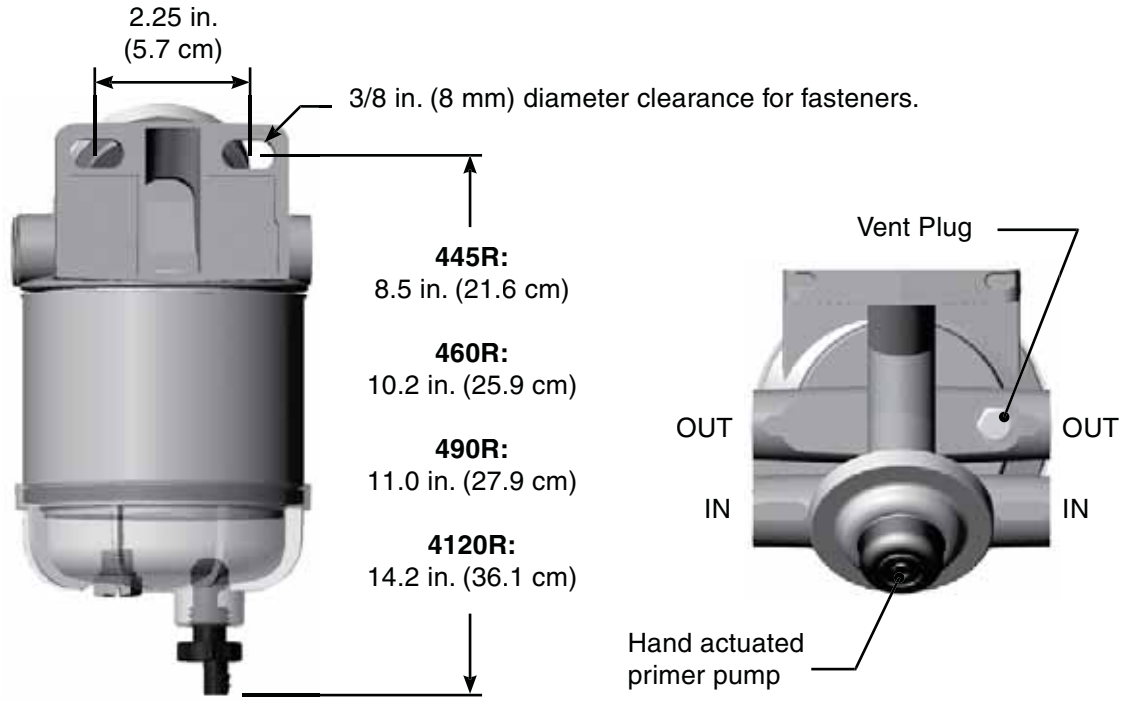

Installation Instructions

Refer to Mounting Instructions and Installation Diagram and install as follows:

1. **Make sure engine is off and cool to touch.**
2. **445R, 460R and 490R: Apply thread sealant to NPT fittings (do not use thread tapes as particles may break off and contribute to clogging element). 4120R: Apply motor oil or diesel fuel to O-ring on UNF fittings.**
3. **Thread fittings into appropriate fuel ports and tighten snugly. Plug unused ports (if any) with port plugs and tighten snugly.**
4. **Mount filter vertically in a protected area and away from heat sources. Maintain at least 2.0" (5.1 cm) of clearance below filter for draining water and servicing element.**
5. **Attach fuel lines to filter. Avoid tight bends and rubbing areas when routing hose.**
6. **Connect water probe and heater wires (if equipped).**
7. **Open vent plug and operate hand primer pump until fuel purges from vent.**
8. **Close vent plug and start engine. Correct asnecessary with engine off.**

400 Series

Test Data

(Test results are from controlled laboratory testing. Field results may vary.)

*PSI X 2.036 = inHg. (PSI X 6.895 = kPa

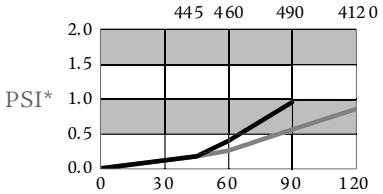

Flow (GPH)
SAE J905 Fuel Flow Restriction

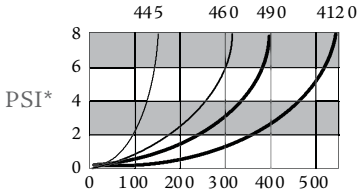

Grams
SAE J905 Solids Capacity
(using: SOFT-2A; 10 mic, Elements)

Installation Diagram

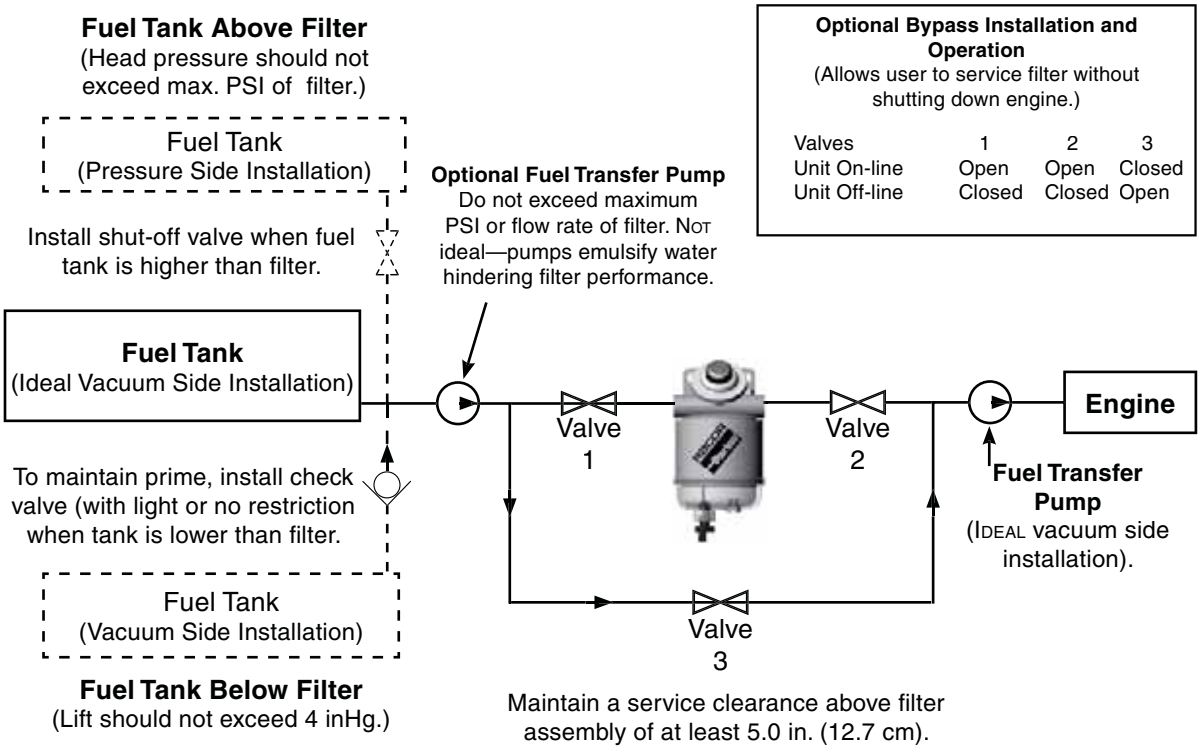

Installation diagram applies to all 400 Series filters. Model 445R shown above. Racor offers hose and fittings to complete this installation - see Accessories.

Service Instructions

Element replacement frequency is determined by contamination level in fuels. Fuel flow to engine becomes restricted as element gradually plugs with contaminants, resulting in noticeable power loss and/or hard starting. As a guideline, change element every 500 hours, 10,000 miles, every other oil change, annually, or at first indication of power loss, whichever occurs first. Always carry extra replacement elements as one tankful of excessively dirty fuel can quickly plug a filter.

1. **Make sure engine is off and cool to touch.**
2. **Close all fuel valves, if applicable, to make sure excess fuel does dot spill during servicing.**
3. **Disconnect water probe and heater connectors, if equipped.**
4. **Open vent plug on mounting head.**
5. **Drain unit of fuel.**
6. **Remove bowl and element. Dispose element properly. Bowl is reusable.**
7. **Lubricate new element seals with motor oil or clean fuel and install only with new element.**
8. **Re-install bowl and tighten by hand only - do not use tools.**
9. **Connect water probe and heater connectors, if equipped.**
10. **Open all fuel valves, if applicable.**
11. **Operate hand primer pump until fuel purges from vent.**
12. **Close vent plug and start engine. Correct as necessary with engine off.**

Draining the Collection Bowl

Water is heavier than fuel and will settle to bottom of bowl and appear different in color if collected in a clear jar. In high humidity environments, check bowl frequently (daily if a poor fuel source is suspected). 400 Series bowls are equipped with a water sensor port that will accept a water probe (sold separately) and will alert operator of a high water condition in the filter.

Do NOT use water probe electronics in gasoline applications - an explosion could occur.

1. **Make sure engine is off and cool to touch.**
2. **Open vent plug.**
3. **Drain water from filter by opening self-venting drain. Close as soon as all water has evacuated.**

If drain is open too long, the entire filter may drain completely of water and fuel

4. **Follow priming instructions.**

Priming Instructions

1. **Prime filter by operating hand primer pump until fuel spills out of vent port.**
2. **Close vent plug snugly.**
3. **Verify all other connections are tight.**
4. **Start engine and check for leaks. Correct as necessary with engine off.**

Trouble Shooting

If a 400 Series filter fails to hold prime, first check vent plug, drain valve, fittings, head, element and bowl are properly tightened. Next, check fuel line connections and verify that they are free of pinches or unnecessary bends and check to see if fuel tank strainer (or pick-up tube) is clogged. If problems persist and element is new, call Racor Technical Support at the number listed below.

400 Series

Replacement Parts

445R, 460R and 490R	Part Number	Description
1.	**RK 10110**	Metal Vent Plug Kit (3/8”-24 SAE)
2.	**RK 22425**	Mounting Head Kit (3/8”-18 NPTF) (includes head, #1, #3 and #4)
	N/A	Mounting Head Kit (16 mm X 1.5) (includes same as RK22425)
3.	**RK 22798**	Bypass Valve Kit
4.	**RK22998**	Element Gasket Kit
5.	See Replacement Element Chart	
6.	**RK 22333**	Bowl Gasket Kit
7.	Replacement Bowl Kits (includes bowl #6, #8 and #9)	
	RK 21113-13-11	Clear Bowl Kit
	RK 22616-01[1]	Heated Clear Bowl Kit (same as above, 12 vdc heater)
	RK 22616-02[1]	Heated Clear Bowl Kit (same as above, 24 vdc heater)
8.	**RK 20126**	Plug Kit (½”-20 SAE)
9.	**RK 30476**	Self-Venting Drain Kit
10.	**RK 30964**[2]	Water Probe Kit
	Additional Parts (not shown)	
	RK 22323[1]	Heater Connector Kit
	22209	Installation Instructions

[1] In-bowl heater may require a Heater Relay Kit. Power requirements (maximum) are: 12 vdc = 16.6 amps, 24 vdc = 8.3 amps.

[2] Water probe must be used with a Water Detection Kit - see Accessories. Do not use on gasoline applications.

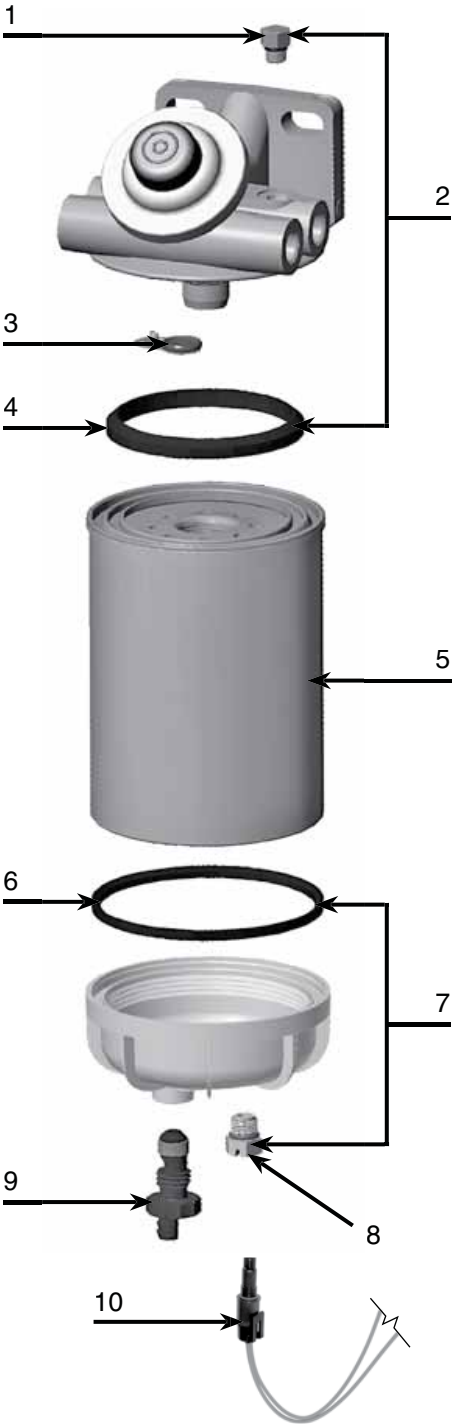

Questions? Contact Technical Support:
800 344 3286 or 209 521 7860 ext. 7555
e-mail: racortech@parker.com

400 Series

Replacement Parts

4120R

	Part Number	Description
1.	**RK 10110**	Metal Vent Plug Kit (3/8”-24 SAE)
2.	**RK 22168**	4120R Mounting Head Kit (¾”-16 SAE) (includes head, #1, #3 and #4)
3.	**RK22998**	Element Gasket (includes #3 and #6)
4.	**RK 22798**	By-Pass Valve Kit
5.	Replacement Elements:	
	R120S	2 micron
	R120T	10 micron
	R120P	30 micron
6.	**RK22998**	Bowl O-ring
7.	Replacement Bowl Kits (includes bowl #6, #8 and #9)	
	RK 30063	Clear Bowl Kit
	RK 30900[1]	Heated Clear Bowl Kit (same as above, 12 vdc heater)
	RK 30925[1]	Heated Clear Bowl Kit (same as above, 24 vdc heater)
8.	**RK 20126**	Plug Kit (½” SAE)
9.	**RK 30476**	Self-Venting Drain Kit
10.	**RK 30964**[2]	Water Probe Kit

Additional Parts (not shown)

22209	Installation Instructions

[1] In-bowl heater may require a Heater Relay Kit. Power requirements (maximum) are: 12 vdc = 16.6 amps and 24 vdc = 8.3 amps - see Accessories.

[2] Water probe must be used with a Water Detection Kit - see Accessories. Do not use on gasoline applications.

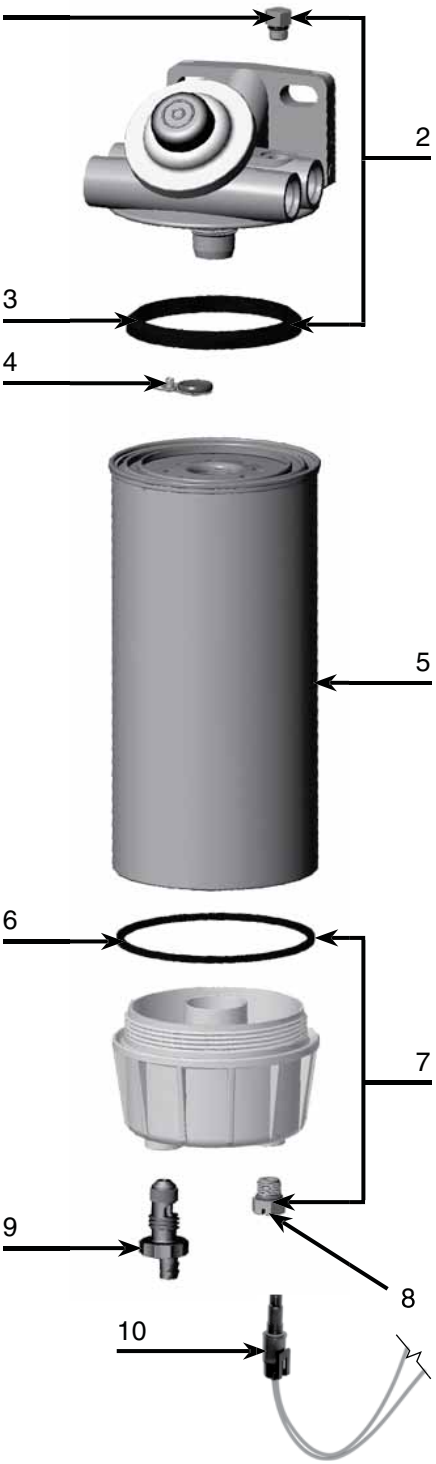

400 Series

400 Series Overview

Specifications	445R	460R	490R	4120R
Maximum Flow Rate	45 GPH (170 LPH)	60 GPH (227 LPH)	90 GPH (341 LPH)	120 GPH (454 LPH)
Port Size	3/8”-18 NPTF (SAE J476)	3/8”-18 NPTF (SAE J476)	3/8”-18 NPTF (SAE J476)	3/4”-16 SAE (SAE J1926)
Total Number of Ports: **(total inlets)** **(total outlets)**	4 2 2	4 2 2	4 2 2	4 2 2
Min. Service Clearance		2.0 in. (5.1 cm)	2.0 in. (5.1 cm)	2.0 in. (5.1 cm)
Center Threads	1”-14	1”-14	1”-14	1”-14
Height	9.3 in. (23.6 cm)	11.0 in. (27.9 cm)	11.8 in. (30.0 cm)	15.0 in. (38.1 cm)
Width	4.8 in. (12.1 cm)	4.5 in. (11.4 cm)	4.5 in. (11.4 cm)	4.5 in. (11.4 cm)
Depth	4.5 in. (11.4 cm)	4.8 in. (12.1 cm)	4.8 in. (12.1 cm)	4.8 in. (12.1 cm)
Weight (dry)	2.5 lb (1.1 kg)	2.7 lb (1.2 kg)	2.9 lb (1.3 kg)	3.9 lb (1.8 kg)
Clean Pressure Drop	0.17 PSI (0.01 bar)	0.39 PSI (0.03 bar)	0.95 PSI (0.07 bar)	0.85 PSI (0.06 bar)
Max. Allowable Pressure[1]	30 PSI (2.07 bar)	30 PSI (2.07 bar)	30 PSI (2.07 bar)	15 PSI (1.03 bar)
Available Options:[2] **(water sensor)** **(heater)**[3]	 Yes Yes	 Yes Yes	 Yes Yes	 Yes Yes
Bowl Capacity (water) **(with heater)**	4.0 oz. (118 ml) 3.5 oz. (104 ml)	4.0 oz. (118 ml) 3.5 oz. (104 ml)	4.0 oz. (118 ml) 3.5 oz. (104 ml)	2.8 oz. (82 ml) 2.4 oz. (70 ml)
H_2O Removal Efficiency	99%			
Operating Temperature	-40° to +255°F (-40° to +124°C)			

[1] Pressure installations are applicable up to maximum PSI shown. Vacuum installations are recommended.
[2] Do not use with gasoline applications.
[3] Maximum power requirements for in-bowl heater option: 12 vdc (200 watt) = 16.6 amps, 24 vdc (200 watt) = 8.3 amps. See Accessories section for heater relay kits, if needed.

Questions? Contact Technical Support:
800 344 3286 or 209 521 7860 ext. 7555
e-mail: racortech@parker.com

424Series

WFH424

Fuel Heater/Water Separator

Want proven reliability? A Racor 424 Fuel Heater/Water Separators are for today's high performance heavy-duty and smaller midrange engines. These lightweight aluminum units use engine coolant to produce a 47° F rise in fuel temperature, eliminating the need for fuel blending.

A 424's three-stage water separation process is more than 99% effective in eliminating water from fuel under SAE J1839 test parameters.

Stage 1: A self-cleaning stripper screen removes water and solid contaminants from the fuel, so no primary fuel filter is required.

Stage 2: Fuel contaminants and water are drained by the driver through the unit's self-venting drain valve.

Stage 3: A floating check ball valve system guards against loss of prime during service.

Specifications	
Maximum Flow Rate: (with diesel)	60 GPH (227 LPH)
Inlet/Outlet Port Size	1/2 NPT
Housing Material	Aluminum
Replacement Element	Screen
Micron Rating	70
Minimum Service Clearance (below filter)	4.0 in. (10.2 cm)
Height	10.0 in. (25.4 cm)
Depth	5.9 in. (15.0 cm)
Width	5.3 in. (13.5 cm)
Weight (dry)	6.3 lbs (2.9 kg)
Maximum Working Pressure[1]	N/A
Water Removal Efficiency	99%
Clean Pressure Drop	0.04 PSI (0.28 kPa)
Case Quantity	-
Ambient Temperature Range	-40° to +250°F (-40° to +121°C)
Maximum Fuel Temperature	190°F (32°C)

Notes: [1]Vacuum side installations only.

Questions? Contact Technical Support:
800 344 3286 or 209 521 7860 ext. 7555
e-mail: racortech@parker.com

Parker Racor

424 Series

How to Order

WFH424
Basic Model Comes standard with a 70 Micron Stripper Screen and Mounting Brackets.

Mounting Information (all models)

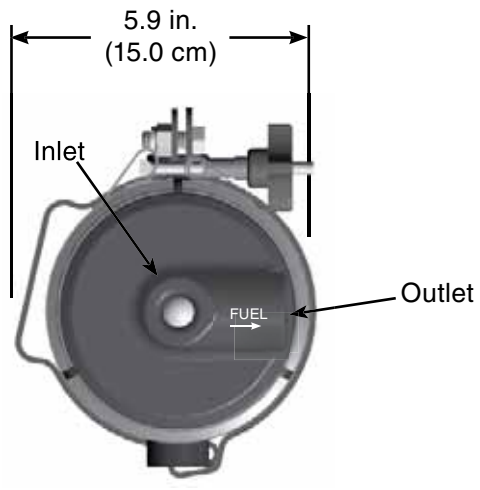

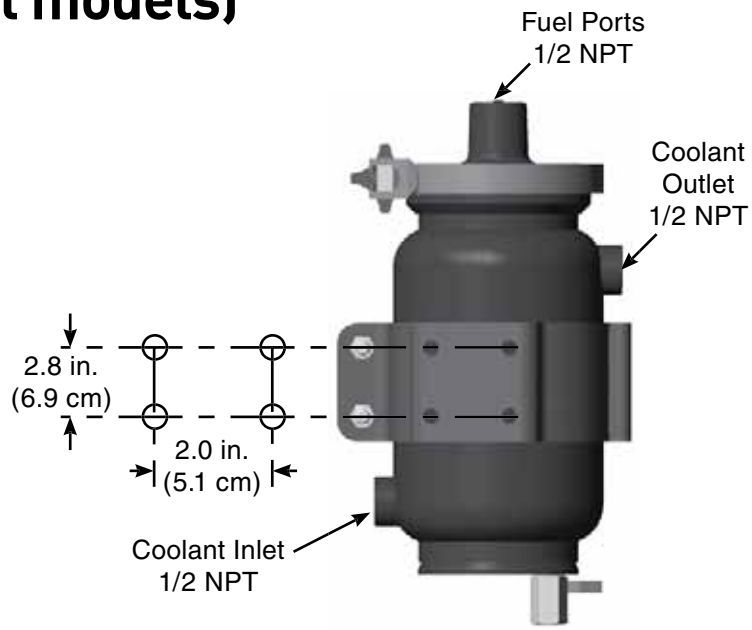

Back View

Questions? Contact Technical Support:
800 344 3286 or 209 521 7860 ext. 7555
e-mail: racortech@parker.com

424 Series

Replacement Parts

	Part Number	Description
1.	**WFH5760**	Cover Clamp Kit
2.	**WFH5726X**	424 Cover Kit
3.	**WFH5731C**	Stopper Seal Kit
4.	**WFH5731K**	Check Ball Kit
5.	**WFH5730P**	O-ring Kit
6.	**WFH4732**	70 Micron Screen Kit (includes #5)
7.	**WFH4738**	424 Body Kit
8.	**WFH4736**	Mounting Bracket Kit
9.	**WFH5742**	Ball Valve Kit

Additional Parts (not shown)

BK38100L	Bolt Kit
WFH4750K	424 Complete Rebuild Kit

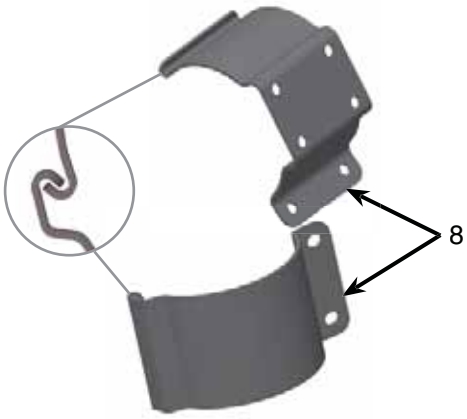

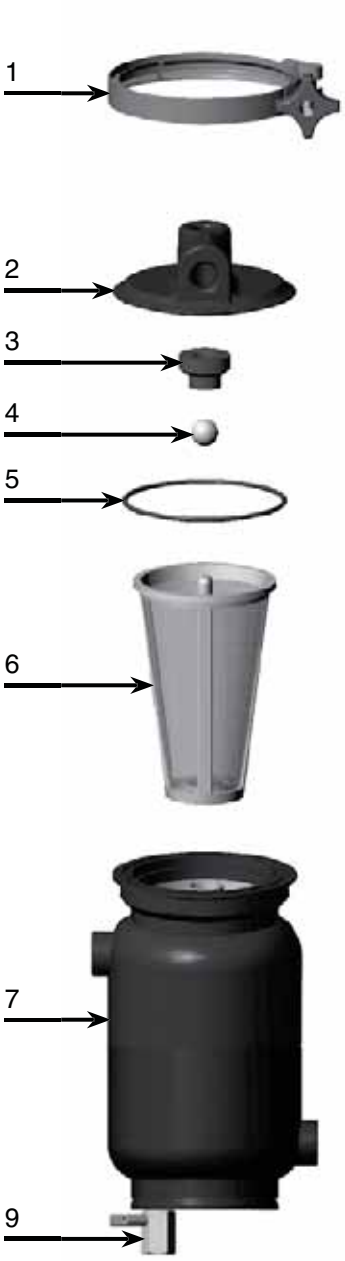

424 Series

Installation Diagram

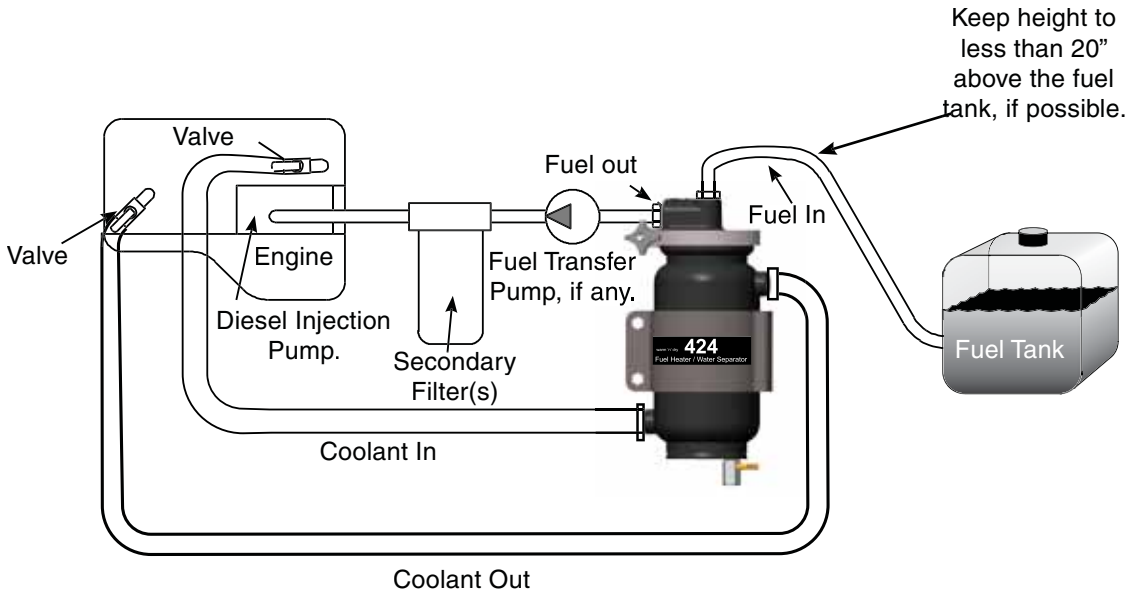

Note: Coolant must be maintained according to engine manufacturers specifications. Improperly maintained coolant may cause damage to this product and other components. If any work is performed on the cooling system, be sure properly maintained coolant is circulated through the fuel heater or freeze damage may occur.

Test Data

Test results are from controlled laboratory testing. Field results may vary by application.

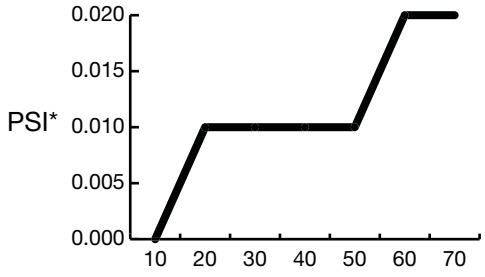

Flow GPH (no screen)

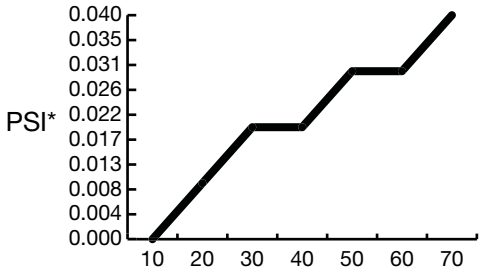

Flow GPH (70 micron)

*PSI X 2.036 = inHg (PSI X 6.895 = kPa)

Questions? Contact Technical Support:
800 344 3286 or 209 521 7860 ext. 7555
e-mail: racortech@parker.com

424 Series

Please refer to page 96 for call out descriptions.

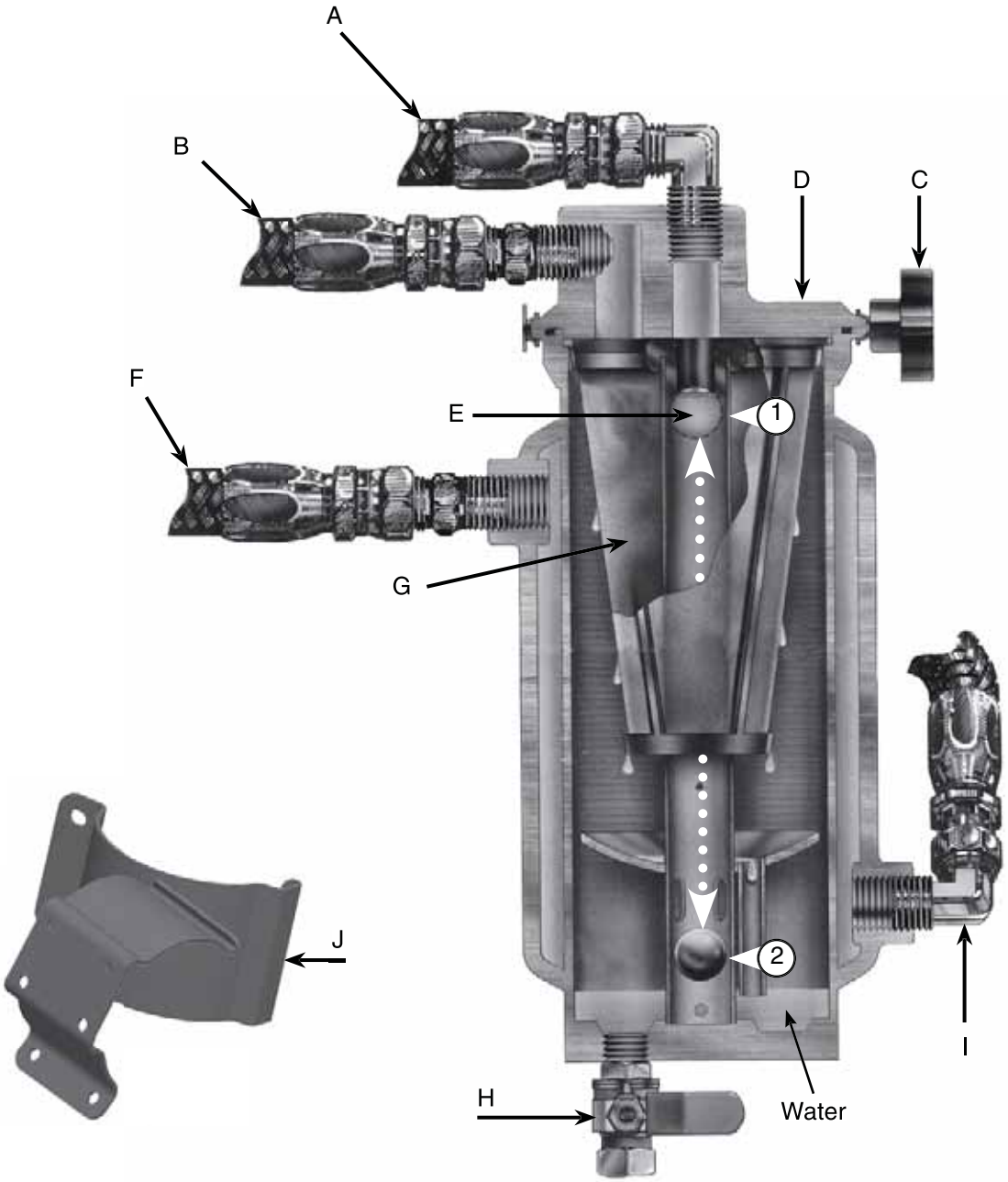

424 Series

Features and Benefits

A. **Fuel Inlet:** Fuel flows in and is cleaned and heated before returning to engine.

B. **Fuel Outlet:** Warm fuel escapes and is consumed by engine.

C. **Cover Clamp:** Allows cover to be rotated 180º for ease and versatility of installation. Do not use tools, hand-tighten clamp only.

D. **Cover:** The self piloting no thread clamp-on design allows the top cover to be positioned in any direction for fuel routing. The cover may be removed with fuel line intact, and without tools.

E. **Internal Check Valve:** The floating check ball (check ball moves up and down through tube to ensure prime is not lost) valve system guards against loss of prime during fuel system service. Delaying the check ball for four and a half seconds allows time for any foreign matter to clear the valve seat area, ensuring a tight seat.

1. Engine Off
2. Engine Running

F. **Stripper Screen:** The 424 has a self-flushing screen that will not allow water to pass through, and it acts as a prefilter removing contaminants to 70 micron. Eliminating the need for a primary fuel filter.

G. **Coolant Outlet:** Coolant that was circulating through unit is now returning to engine.

H. **Self Venting Drain Valve:** Unique one-vale system for fast and simple water draining, it is easy for operators to drain unit.

I. **Coolant Inlet:** Coolant enters unit to warm fuel and exits through outlet.

J. **Mounting Bracket:** Two piece design, mount filter vertically only.

The 3-Stage Process

Stage 1.

Fuel enters the 424 through the cover's center port. The fuel travels down the isolator tube, pushing the check ball down, then passes through fuel slots on the bottom. The fuel changes direction and travels up and around the diffuser plate. The entire time it is being warmed by the surrounding hot water jacket.

Stage 2.

Fuel then passes through the self flushing stripper screen where the contaminants and water are left behind to fall to the top of the diffuser plate. Their, the contaminates settle below incoming fuel and collect at the base of the unit, were the contaminants and water are drained.

Stage 3.

Finally the clean, dry, and warm fuel exits the 424 unit through the cover's side port and than is ingested by the engine.

Questions? Contact Technical Support:
800 344 3286 or 209 521 7860 ext. 7555
e-mail: racortech@parker.com

500 Series

WFH500

Fuel Heater/Water Separator

Want proven reliability? A Racor 525 Fuel Heater/Water Separators are for today's high performance heavy-duty and smaller midrange engines. These lightweight aluminum units use engine coolant to produce a 47° F rise in fuel temperature, eliminating the need for fuel blending.

A 525's three-stage water separation process is more than 99% effective in eliminating water from fuel under SAE J1839 test parameters.

Stage 1: A self-cleaning stripper screen removes water and solid contaminants from the fuel, so no primary fuel filter is required.

Stage 2: Fuel contaminants and water are drained by the driver through the unit's self-venting drain valve.

Stage 3: A floating check ball valve system guards against loss of prime during service.

Specifications	
Maximum Flow Rate: (with diesel)	60 GPH (227 LPH)
Inlet/Outlet Port Size	1/2 NPT
Housing Material	Aluminum
Replacement Element	Screen
Micron Rating	70
Minimum Service Clearance (below filter)	4.0 in. (10.2 cm)
Height	10.0 in. (25.4 cm)
Depth	5.9 in. (15.0 cm)
Width	5.3 in. (13.5 cm)
Weight (dry)	6.3 lbs (2.9 kg)
Maximum Working Pressure[1]	N/A
Water Removal Efficiency	99%
Clean Pressure Drop	0.04 PSI (0.28 kPa)
Case Quantity	-
Ambient Temperature Range	-40° to +250°F (-40° to +121°C)
Maximum Fuel Temperature	190°F (32°C)

Notes: [1]Vacuum side installations only.

Questions? Contact Technical Support:
800 344 3286 or 209 521 7860 ext. 7555
e-mail: racortech@parker.com

Parker Racor

500 Series

WFH525

Fuel Heater/Water Separator

Want proven reliability? A Racor 525 Fuel Heater/Water Separators are for today's high performance heavy-duty and smaller midrange engines. These lightweight aluminum units use engine coolant to produce a 47° F rise in fuel temperature, eliminating the need for fuel blending.

A 525's three-stage water separation process is more than 99% effective in eliminating water from fuel under SAE J1839 test parameters.

Stage 1: A self-cleaning stripper screen removes water and solid contaminants from the fuel, so no primary fuel filter is required.

Stage 2: Fuel contaminants and water are drained by the driver through the unit's self-venting drain valve.

Stage 3: A floating check ball valve system guards against loss of prime during service.

Specifications	
Maximum Flow Rate: (with diesel)	60 GPH (227 LPH)
Inlet/Outlet Port Size	1/2 NPT
Housing Material	Aluminum
Replacement Element	Screen
Micron Rating	70
Minimum Service Clearance (below filter)	4.0 in. (10.2 cm)
Height	10.0 in. (25.4 cm)
Depth	5.9 in. (15.0 cm)
Width	5.3 in. (13.5 cm)
Weight (dry)	6.3 lbs (2.9 kg)
Maximum Working Pressure[1]	N/A
Water Removal Efficiency	99%
Clean Pressure Drop	0.04 PSI (0.28 kPa)
Case Quantity	-
Ambient Temperature Range	-40° to +250°F (-40° to +121°C)
Maximum Fuel Temperature	190°F (32°C)

Notes: [1]Vacuum side installations only.

Questions? Contact Technical Support:
800 344 3286 or 209 521 7860 ext. 7555
e-mail: racortech@parker.com

500 Series

WFH525/ACV

Fuel Heater/Water Separator

Want proven reliability? A Racor 525 Fuel Heater/Water Separators are for today's high performance heavy-duty and smaller midrange engines. These lightweight aluminum units use engine coolant to produce a 47° F rise in fuel temperature, eliminating the need for fuel blending.

A 525's three-stage water separation process is more than 99% effective in eliminating water from fuel under SAE J1839 test parameters.

Stage 1: A self-cleaning stripper screen removes water and solid contaminants from the fuel, so no primary fuel filter is required.

Stage 2: Fuel contaminants and water are drained by the driver through the unit's self-venting drain valve.

Stage 3: A floating check ball valve system guards against loss of prime during service.

Specifications	
Maximum Flow Rate: (with diesel)	60 GPH (227 LPH)
Inlet/Outlet Port Size	1/2 NPT
Housing Material	Aluminum
Replacement Element	Screen
Micron Rating	70
Minimum Service Clearance (below filter)	4.0 in. (10.2 cm)
Height	10.0 in. (25.4 cm)
Depth	5.9 in. (15.0 cm)
Width	5.3 in. (13.5 cm)
Weight (dry)	6.3 lbs (2.9 kg)
Maximum Working Pressure[1]	N/A
Water Removal Efficiency	99%
Clean Pressure Drop	0.04 PSI (0.28 kPa)
Case Quantity	-
Ambient Temperature Range	-40° to +250°F (-40° to +121°C)
Maximum Fuel Temperature	190°F (32°C)

Notes: [1]Vacuum side installations only.

Questions? Contact Technical Support:
800 344 3286 or 209 521 7860 ext. 7555
e-mail: racortech@parker.com

Parker Racor

500 Series

WFH525EHA

Fuel Heater/Water Separator

Want proven reliability? A Racor 525 Fuel Heater/Water Separators are for today's high performance heavy-duty and smaller midrange engines. These lightweight aluminum units use engine coolant to produce a 47° F rise in fuel temperature, eliminating the need for fuel blending.

A 525's three-stage water separation process is more than 99% effective in eliminating water from fuel under SAE J1839 test parameters.

Stage 1: A self-cleaning stripper screen removes water and solid contaminants from the fuel, so no primary fuel filter is required.

Stage 2: Fuel contaminants and water are drained by the driver through the unit's self-venting drain valve.

Stage 3: A floating check ball valve system guards against loss of prime during service.

Specifications	
Maximum Flow Rate: (with diesel)	60 GPH (227 LPH)
Inlet/Outlet Port Size	1/2 NPT
Housing Material	Aluminum
Replacement Element	Screen
Micron Rating	70
Minimum Service Clearance (below filter)	4.0 in. (10.2 cm)
Height	10.0 in. (25.4 cm)
Depth	5.9 in. (15.0 cm)
Width	5.3 in. (13.5 cm)
Weight (dry)	6.3 lbs (2.9 kg)
Maximum Working Pressure[1]	N/A
Water Removal Efficiency	99%
Clean Pressure Drop	0.04 PSI (0.28 kPa)
Case Quantity	-
Ambient Temperature Range	-40° to +250°F (-40° to +121°C)
Maximum Fuel Temperature	190°F (32°C)

Notes: [1]Vacuum side installations only.

Questions? Contact Technical Support:
800 344 3286 or 209 521 7860 ext. 7555
e-mail: racortech@parker.com

500 Series

Features and Benefits

A. **Fuel Inlet:** Fuel flows in and is cleaned and heated before returning to engine.

B. **Fuel Outlet**: Warm fuel escapes and is consumed by engine.

C. **Cover Clamp:** Allows cover to be rotated 180° for ease and versatility of installation. Do not use tools, hand-tighten clamp only.

D. **Cover:** The self piloting no thread clamp-on design allows the top cover to be positioned in any direction for fuel routing. The cover may be removed with fuel line intact, and without tools.

E. **Internal Check Valve:** The floating check ball (check ball moves up and down through tube to ensure prime is not lost) valve system guards against loss of prime during fuel system service. Delaying the check ball for four and a half seconds allows time for any foreign matter to clear the valve seat aria, ensuring a tight seat.

1. Engine Off
2. Engine Running

F. **Stripper Screen:** The 500 has a self-flushing screen that will not allow water to pass through, and it acts as a prefilter removing contaminants to 70 micron. Eliminating the need for a primary fuel filter, the assembly also comes with a 30 micron screen.

G. **Coolant Outlet:** Coolant that was circulating through unit is now returning to engine.

H. **Self Venting Drain Valve:** Unique one-vale system for fast and simple water draining, it is easy for operators to drain unit.

I. **Coolant Inlet:** Coolant enters unit to warm fuel and exits through outlet.

J. **Automatic Coolant Valve (ACV):** Shuts off coolant supply at 80° F (26.6 c) to protect electronic engine controls from over heating.

K. **Mounting Bracket:** Two piece design, mount filter vertically only.

L . **Optional:** 12 vdc 200 watt preheater cartridge (part number CH4.5).

M. **Optional:** 120 vdc 63 watt electric preheater (part number CH2.75-1).

The 3-Stage Process

Stage 1.

Fuel enters the 500 through the cover's center port. The fuel travels down the isolator tube, pushing the check ball down, then passes through fuel slots on the bottom. The fuel changes direction and travels up and around the diffuser plate. The entire time it is being warmed by the surrounding hot water jacket.

Stage 2.

Fuel then passes through the self flushing stripper screen where the contaminants and water are left behind to fall to the top of the diffuser plate. Their, the contaminates settle below incoming fuel and collect at the base of the unit, were the contaminants and water are drained.

Stage 3.

Finally the clean, dry, and warm fuel exits the 500 unit through the cover's side port and than is ingested by the engine.

500 Series

Please refer to page 101 for call out descriptions.

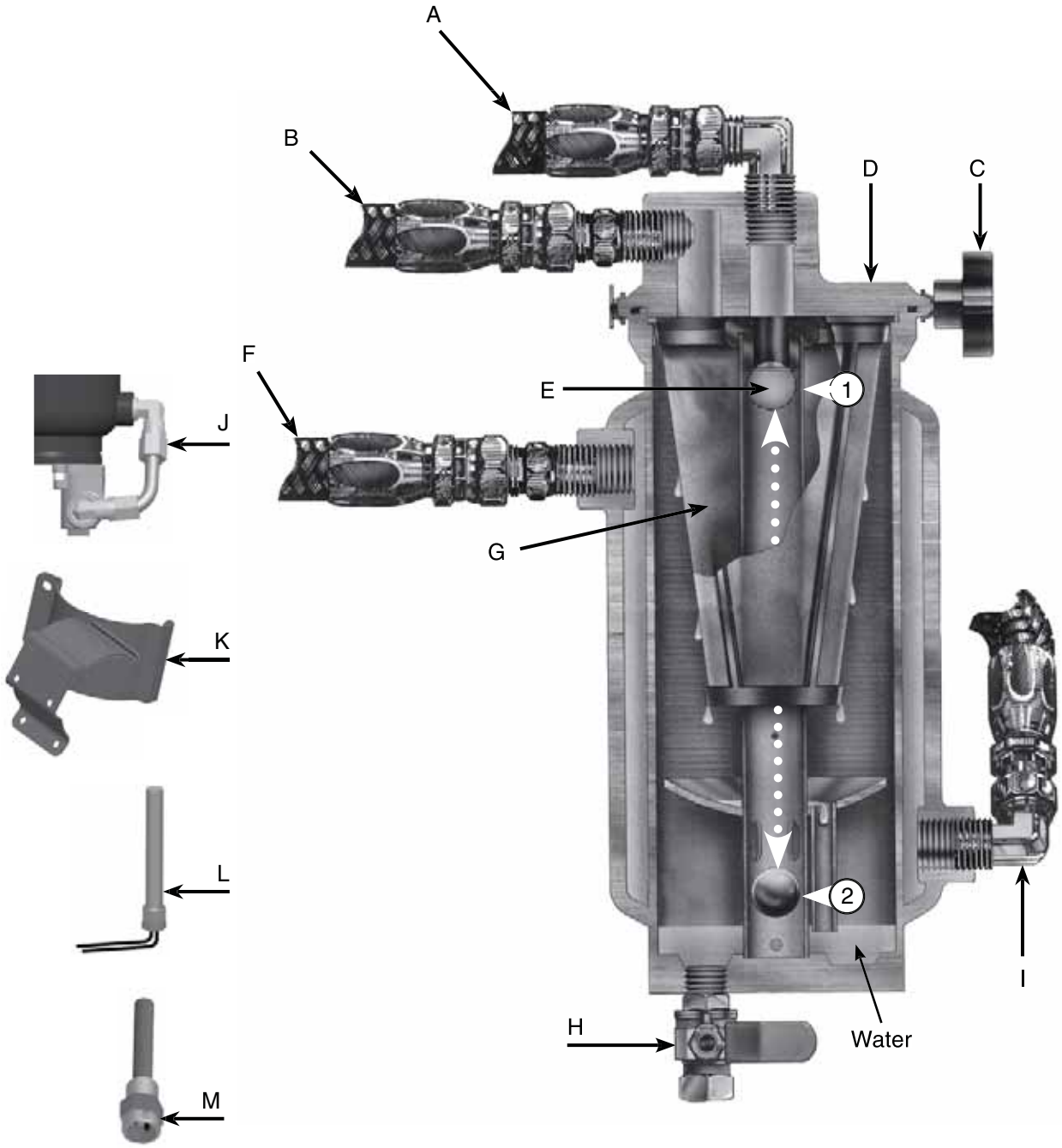

500 Series Overview

Specifications	WFH500	WFH525	WFH525/ACV	525EHA
Flow Rate	120 GPH (454 GPH)	120 GPH (454 GPH)	120 GPH (454 GPH)	120 GPH (454 GPH)
Fuel Port Size	1/2 NPT	1/2 NPT	1/2 NPT	1/2 NPT
Coolant Port Size	N/A	1/2 NPT	1/2 NPT	1/2 NPT
Width	5.3 in. (13.5 cm)	5.3 in. (13.5 cm)	5.3 in. (13.5 cm)	5.3 in. (13.5 cm)
Depth	5.3 in. (13.5 cm)	5.3 in. (13.5 cm)	5.3 in. (13.5 cm)	5.3 in. (13.5 cm)
Height	15.8 in. (40.1 cm)	15.8 in. (40.1 cm)	15.9 in. (40.3 cm)	15.9 in. (40.3 cm)
H_2O Removal	99%	99%	99%	99%
Coolant Ports	No	Yes	Yes	Yes
Heater Ports **12 vdc Pre-heater** **120 vdc Pre-heater**	 Yes No	 No No	 No No	 No Yes
Automatic Coolant Valve (ACV)	No	No	Yes	Yes
Service Element	4 in.	4 in.	4 in.	4 in.
Operating Temperature	-40° to +255°F (-40° to +124°C)			

500 Series

Installation Diagram

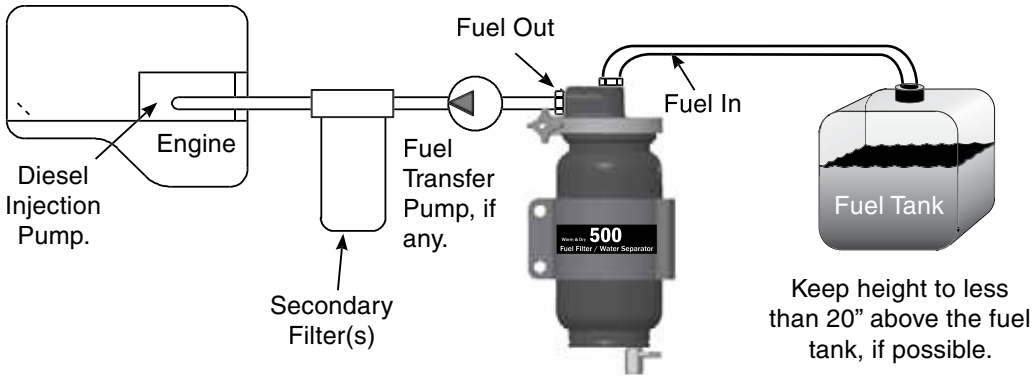

Mounting Information

Top View

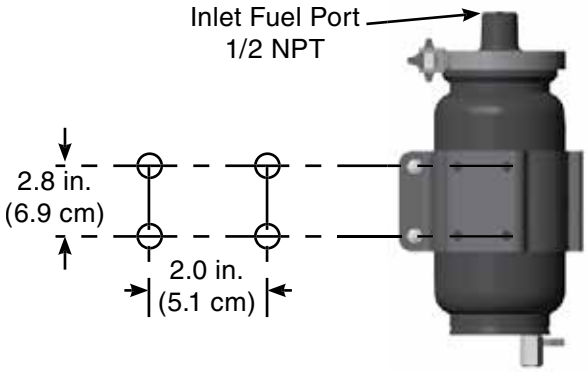

Back View

Questions? Contact Technical Support:
800 344 3286 or 209 521 7860 ext. 7555
e-mail: racortech@parker.com

500 Series

Replacement Parts

WFH500

	Part Number	Description
1.	**WFH5760**	Cover Clamp Kit
2.	**WFH5726B**	500 Cover Kit
3.	**WFH5731K**	Check Ball Kit (includes items 3, 4 & 5)
4.	**WFH5730P**	O-ring Kit (includes 6 o-rings)
5.	**WFH5732**	70 Micron Stripper Screen Kit
	WFH5732/30	30 Micron Stripper Screen Kit (includes o-ring)
6.	**WFH5038X**	500 Body Kit
7.	**WFH5742**	Drain Valve Kit
8.	**WFH5736**	Mounting Bracket Kit
9.	**N/A**	12 vdc 200 watt Cartridge Heater

Additional Parts (not shown)

525B/V	Bolt Kit
WFH5750K	Rebuild Kit 70 Micron (fits all 500 series)
WFH5750K/30	Rebuild Kit 30 Micron (fits all 500 series)

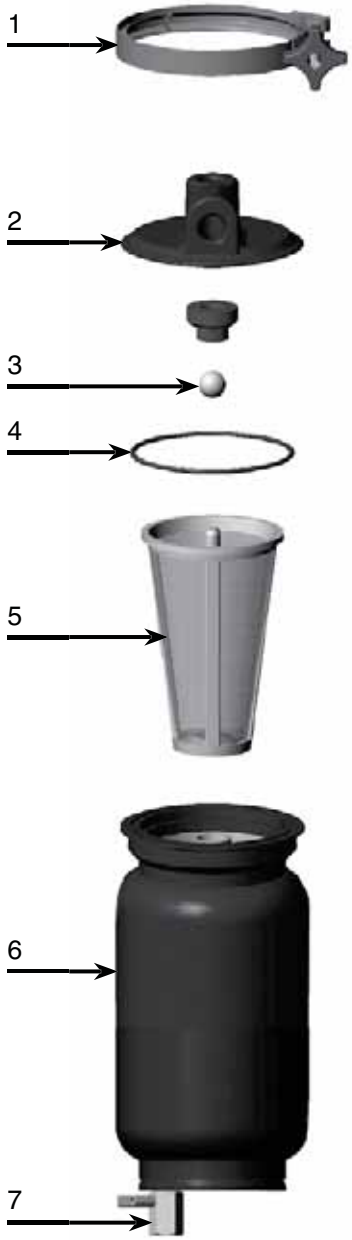

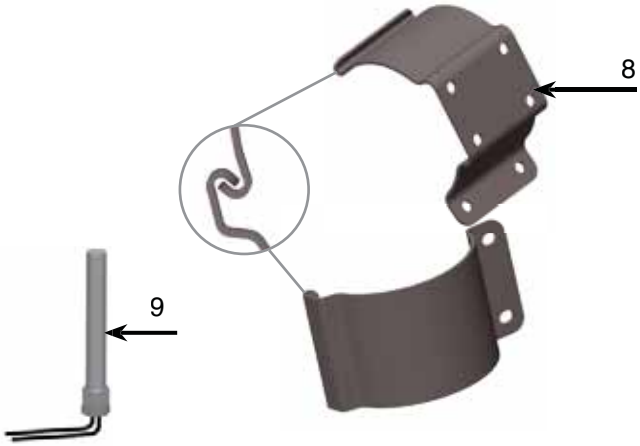

500 Series

How to Order

(The example below illustrates how part numbers are constructed.)

WFH525ACV/30

Basic Model:
Comes standard with a **70** Micron Stripper Screen and mounting brackets.

Specify:
/30 for a 30 micron Stripper Screen (omit if not desired)

Specify:
ACV for a Automatic Coolant Valve. (omit if not desired)

Test Data

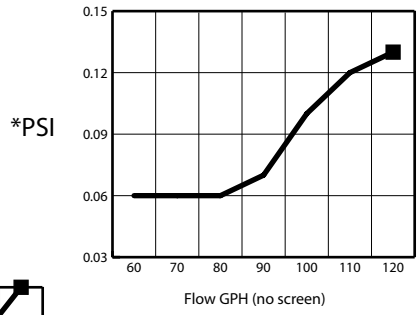

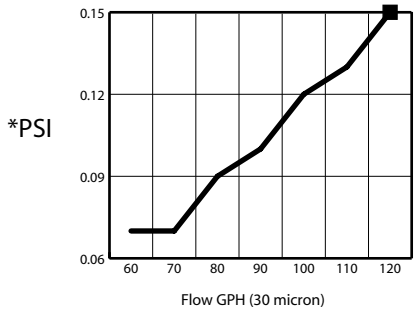

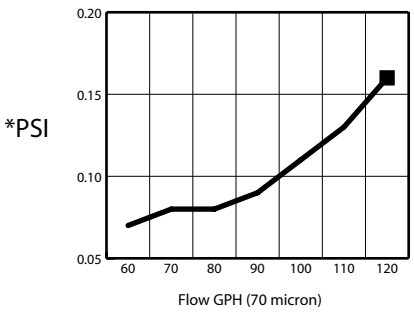

PSI X 2.036 = inHg (PSI X 6.895 = kPa)

Test results are from controlled laboratory testing. Field results may vary by application.

Questions? Contact Technical Support:
800 344 3286 or 209 521 7860 ext. 7555
e-mail: racortech@parker.com

500 Series

Installation Diagram

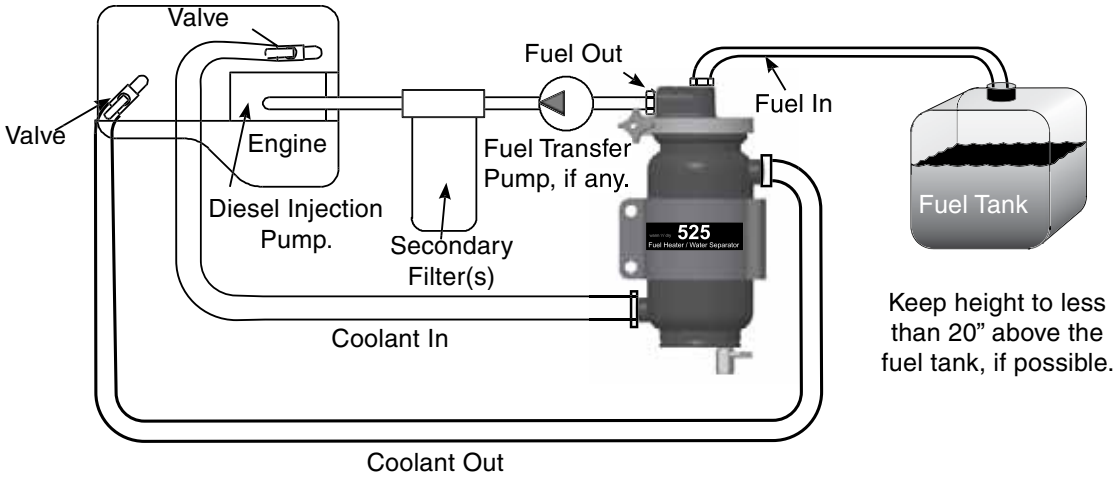

Mounting Information

Top View

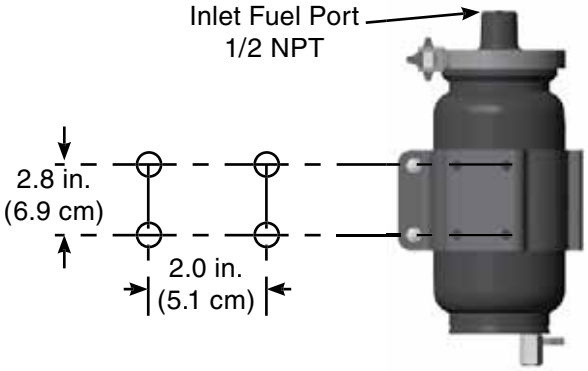

Back View

500 Series

Replacement Parts

WFH525/WFH525ACV

	Part Number	Description
1.	**WFH5760**	Cover Clamp Kit
2.	**WFH5726B**	525 Cover Kit
3.	**WFH5731K**	Stopper Seal Kit
4.	**WFH5731P**	Check Ball Kit (includes items 3, 4 & 5)
5.	**WFH5730P**	O-ring Kit
6.	**WFH5732**	70 Micron Screen Kit
	WFH5732/30	30 Micron Screen Kit
7.	**WFH5738X**	525 Body Kit
8.	**WFH5742**	Ball Valve Kit
9.	**WFH5736S**	(back) Mounting Bracket Kit
10.	**WFH5736**	(front) Mounting Bracket Kit (includes 9 & 10)
11.	**ACV4500**	Automatic Coolant Shutoff Valve

Additional Parts (not shown)

BK38100L	Bolt Kit
WFH5750K	Rebuild Kit 70 Micron (all 500 series #'s 3-6)
WFH5750K/30	Rebuild Kit 30 Micron (all 500 series #'s 3-6)
RK23045	120vdc Heater Kit

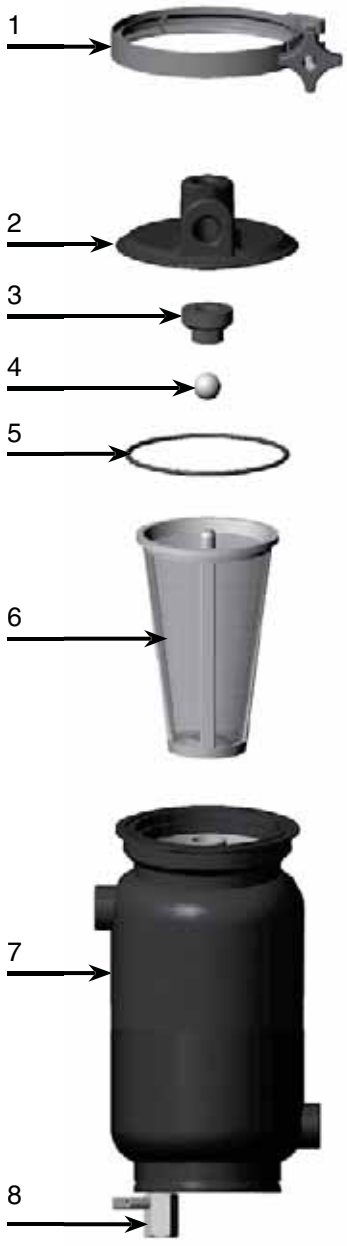

Optional ACV
(automatic coolant valve).

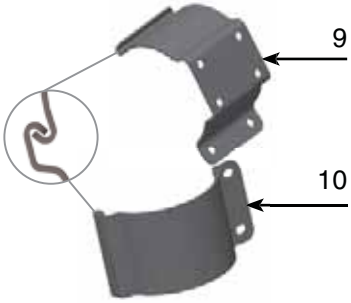

Questions? Contact Technical Support:
800 344 3286 or 209 521 7860 ext. 7555
e-mail: racortech@parker.com

500 Series

How to Order

(The example below illustrates how part numbers are constructed.)

525EHA 30

Basic Model:
Comes standard with a **70** Micron Stripper Screen and mounting brackets and a 120 vdc electric heater and **ACV** valve.

Specify:
30 for a 30 micron Stripper Screen (omit if not desired)

70 Micron Stripper Screen
Optional 30 Micron is Available.

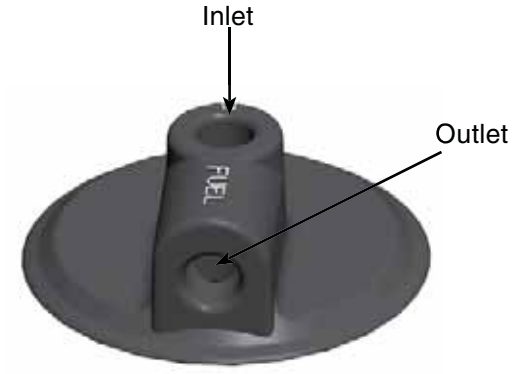

Lid showing Fuel Ports

ACV
(automatic coolant valve).

500 Series

Replacement Parts

525EHA/525EHA30

	Part Number	Description
1.	**WFH5760**	Cover Clamp Kit
2.	**WFH5726B**	525 Cover Kit
3.	**WFH5731K**	Check Ball Kit (includes itmes 3, 4 & 5)
4.	**WFH5730P**	O-ring Kit (includes 6 o-rings)
5.	**WFH5732**	70 Micron Stripper Screen Kit (includes o-ring)
	WFH5732/30	30 Micron Stripper Screen Kit (includes o-ring)
6.	**WFH5738VX**	525 Body Kit (with ACV Kit)
7.	**WFH5742UX**	3/8" Ball Valve Kit
8.	**WFH5736**	Mounting Bracket Kit
9.	**RK23045**	120 vdc Heater Kit
	CH3.5	12 vdc 200 watt Electric Pre Heater

Additional Parts (not shown)

BK38100L	Bolt Kit
WFH5750K	Rebuild Kit 70 Micron (all 500 series #'s 3-6)
WFH5750K/30	Rebuild Kit 30 Micron (all 500 series #'s 3-6)

525 Series

Want proven reliability? A Racor 525 Fuel Heater/Water Separators are for today's high performance heavy-duty and smaller midrange engines. These lightweight aluminum units use engine coolant to produce a 47º F rise in fuel temperature, eliminating the need for fuel blending.

A 525's three-stage water separation process is more than 99% effective in eliminating water from fuel under SAE J1839 test parameters.

Stage 1: A self-cleaning stripper screen removes water and solid contaminants from the fuel, so no primary fuel filter is required.

Stage 2: Fuel contaminants and water are drained by the driver through the unit's self-venting drain valve.

Stage 3: A floating check ball valve system guards against loss of prime during service.

525 units require no scheduled servicing, other than periodic water draining. The screen filtration system is also self-cleaning eliminating the need for additional maintenance. Separated water is quickly and easily eliminated through an integral self-venting drain valve with no loss of prime.

525 units are available with either a 12 volt or 120 volt preheater and optional thermostat, and a ACV (Automatic Coolant Valve). Unit cover rotates 360º for ease of installation on any existing engine configuration.

WFH525, WFH525/30

WFH525/ACV

525 Series

525 Series Overview

Specifications	WFH525	WFH525ACV
Flow Rate	120 GPH (454 GPH)	120 GPH (454 GPH)
Port Size	1/2 NPT	1/2 NPT
Width	5.3 in. (13.5 cm)	5.3 in. (13.5 cm)
Depth	5.3 in. (13.5 cm)	5.3 in. (13.5 cm)
Height[1]	15.8 in. (40.1 cm)	15.9 in. (40.3 cm)
H_2O Removal Efficiency	99%	
Operating Temperature	-40° to +255°F (-40° to +124°C)	
[1]Allow 4” additional space for screen removal.		

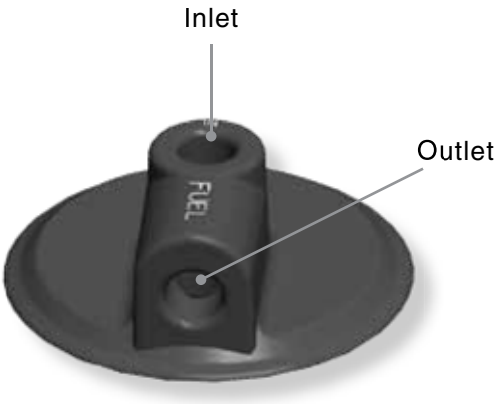

Questions? Contact Technical Support:
800 344 3286 or 209 521 7860 ext. 7555
e-mail: racortech@parker.com

525 Series

How to Order

WFH525	/ACV	/30
Basic Model Comes standard with a **70** Micron Stripper Screen and mounting brackets.	Specify: **/ACV** for a Automatic Coolant Valve. (omit if not desired)	Specify: **/30** for a 30 micron Stripper Screen (omit if not desired)

Mounting Information

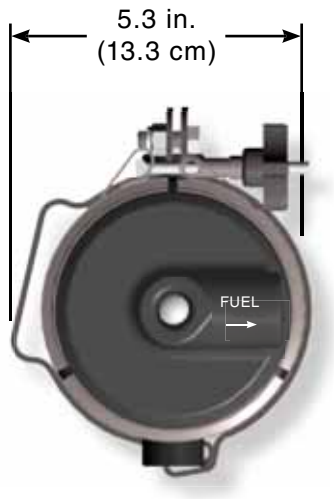

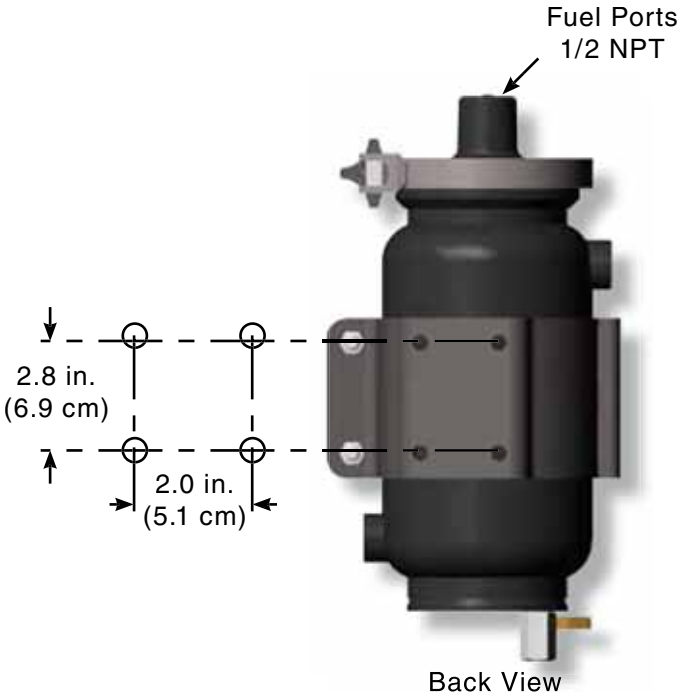

525 Series

Replacement Parts

	Part Number	Description
1.	**WFH5760X**	Cover Clamp Kit
2.	**WFH5726X**	525 Cover Kit
3.	**WFH5731C**	Stopper Seal Kit
4.	**WFH5731B**	Check Ball Kit
5.	**WFH5730X**	O-ring Kit
6.	**WFH5732**	70 Micron Screen Kit
	WFH5732/30	30 Micron Screen Kit
7.	**WFH5738X**	525 Body Kit
8.	**WFH5736S**	(back) Mounting Bracket Kit
9.	**WFH5736R**	(front) Mounting Bracket Kit
10.	**WFH5742**	Ball Valve Kit
11.	**ACV1350**	Automatic Coolant Shutoff Valve

Additional Parts (not shown)

BK38100L	Bolt Kit
CH4.5	12 vdc 200watt Cartridge Heater
CH2.75	120 vdc 63 watt Electric Pre Heater

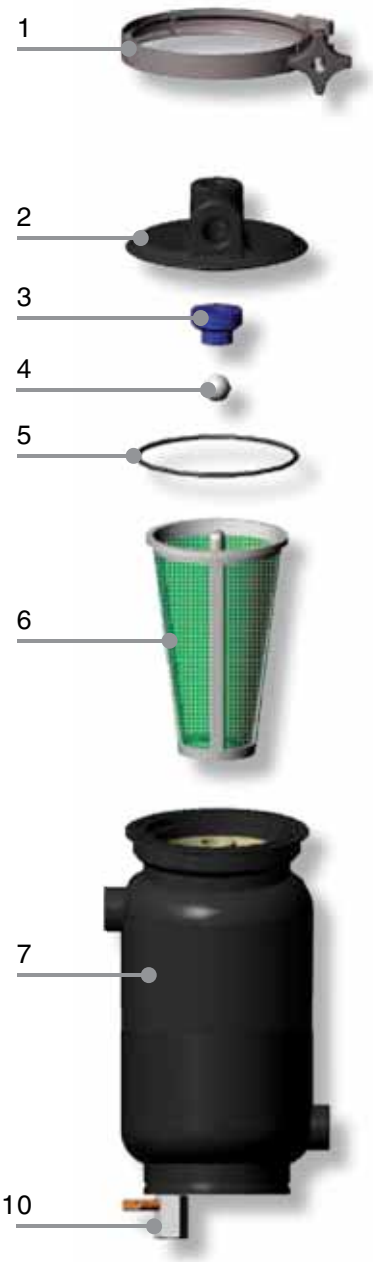

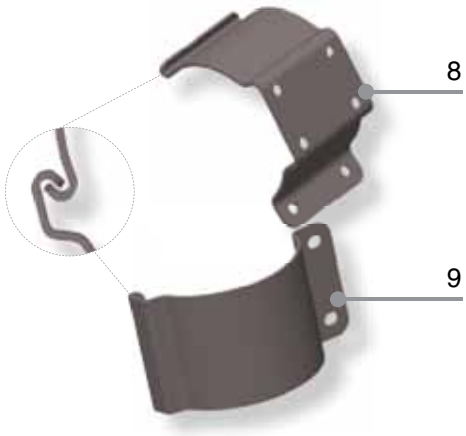

Optional ACV
(automatic coolant valve).

Questions? Contact Technical Support:
800 344 3286 or 209 521 7860 ext. 7555
e-mail: racortech@parker.com

525 Series

Installation Diagram

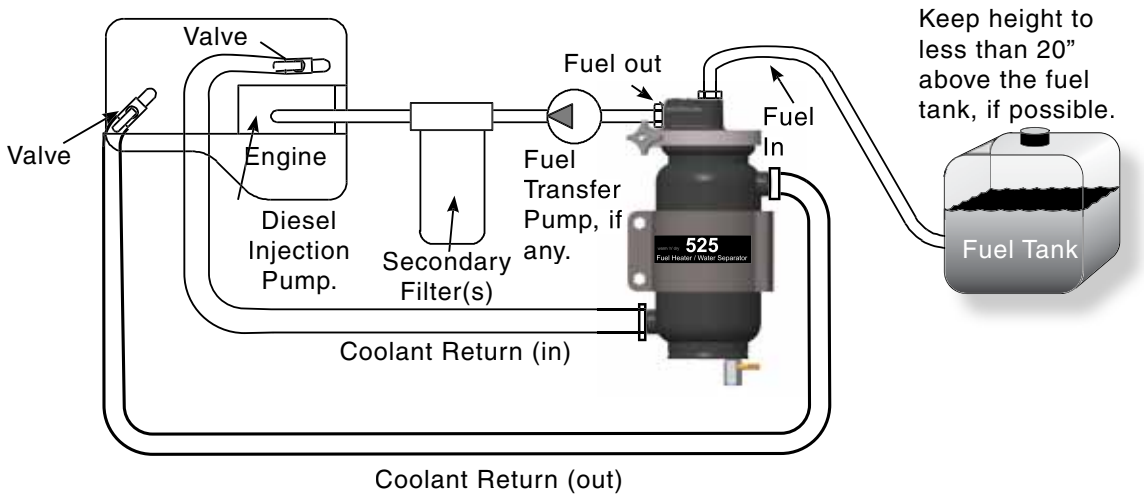

Test Data

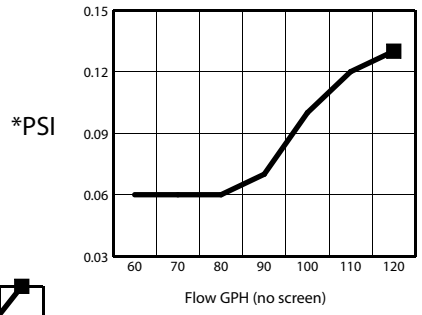

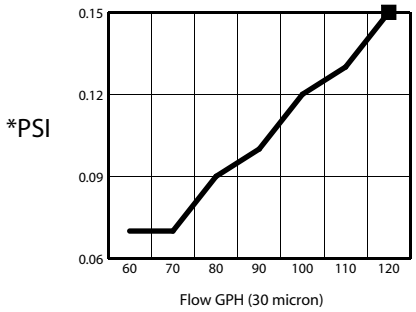

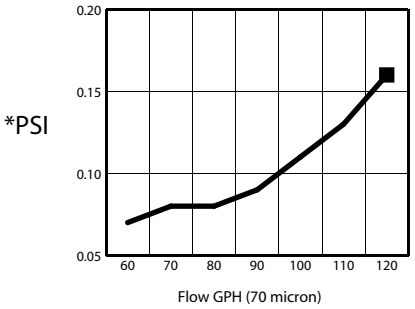

PSI X 2.036 = inHg (PSI X 6.895 = kPa)

Test results are from controlled laboratory testing. Field results may vary by application.

525 Series

Features and Benefits

A. Fuel Inlet: Fuel flows in and is cleaned and heated before returning to engine.

B. Fuel Outlet: Warm fuel escapes and is consumed by engine.

C. Cover Clamp: Allows cover to be rotated 180º for ease and versatility of installation. Do not use tools, hand-tighten clamp only.

D. Cover: The self piloting no thread clamp-on design allows the top cover to be positioned in any direction for fuel routing. The cover may be removed with fuel line intact, and without tools.

E. Internal Check Valve: The floating check ball (check ball moves up and down through tube to ensure prime is not lost) valve system guards against loss of prime during fuel system service. Delaying the check ball for four and a half seconds allows time for any foreign matter to clear the valve seat aria, ensuring a tight seat.

1. Engine Off
2. Engine Running

F. Stripper Screen: The 525 has a self-flushing screen that will not allow water to pass through, and it acts as a prefilter removing contaminants to 70 micron. Eliminating the need for a primary fuel filter, comes in a 30 micron screen also.

G. Coolant Outlet: Coolant that was circulating through unit is now returning to engine.

H. Self Venting Drain Valve: Unique one-vale system for fast and simple water draining, it is easy for operators to drain unit.

I. Coolant Inlet: Coolant enters unit to warm fuel and exits through outlet.

J. Automatic Coolant Valve: (ACV) Protects electronic engine controls from over heating.

K. Mounting Bracket: Two piece design, mount filter vertically only.

Other features also include an optional 120 or 12 volt electric preheaters.

The 3-Stage Process

Stage 1.

Fuel enters the 525 through the cover's center port. The fuel travels down the isolator tube, pushing the check ball down, then passes through fuel slots on the bottom. The fuel changes direction and travels up and around the diffuser plate. The entire time it is being warmed by the surrounding hot water jacket.

Stage 2.

Fuel then passes through the self flushing stripper screen where the contaminants and water are left behind to fall to the top of the diffuser plate. Their, the contaminates settle below incoming fuel and collect at the base of the unit, were the contaminants and water are drained.

Stage 3.

Finally the clean, dry, and warm fuel exits the 525 unit through the cover's side port and than is ingested by the engine.

Questions? Contact Technical Support:
800 344 3286 or 209 521 7860 ext. 7555
e-mail: racortech@parker.com

525 Series

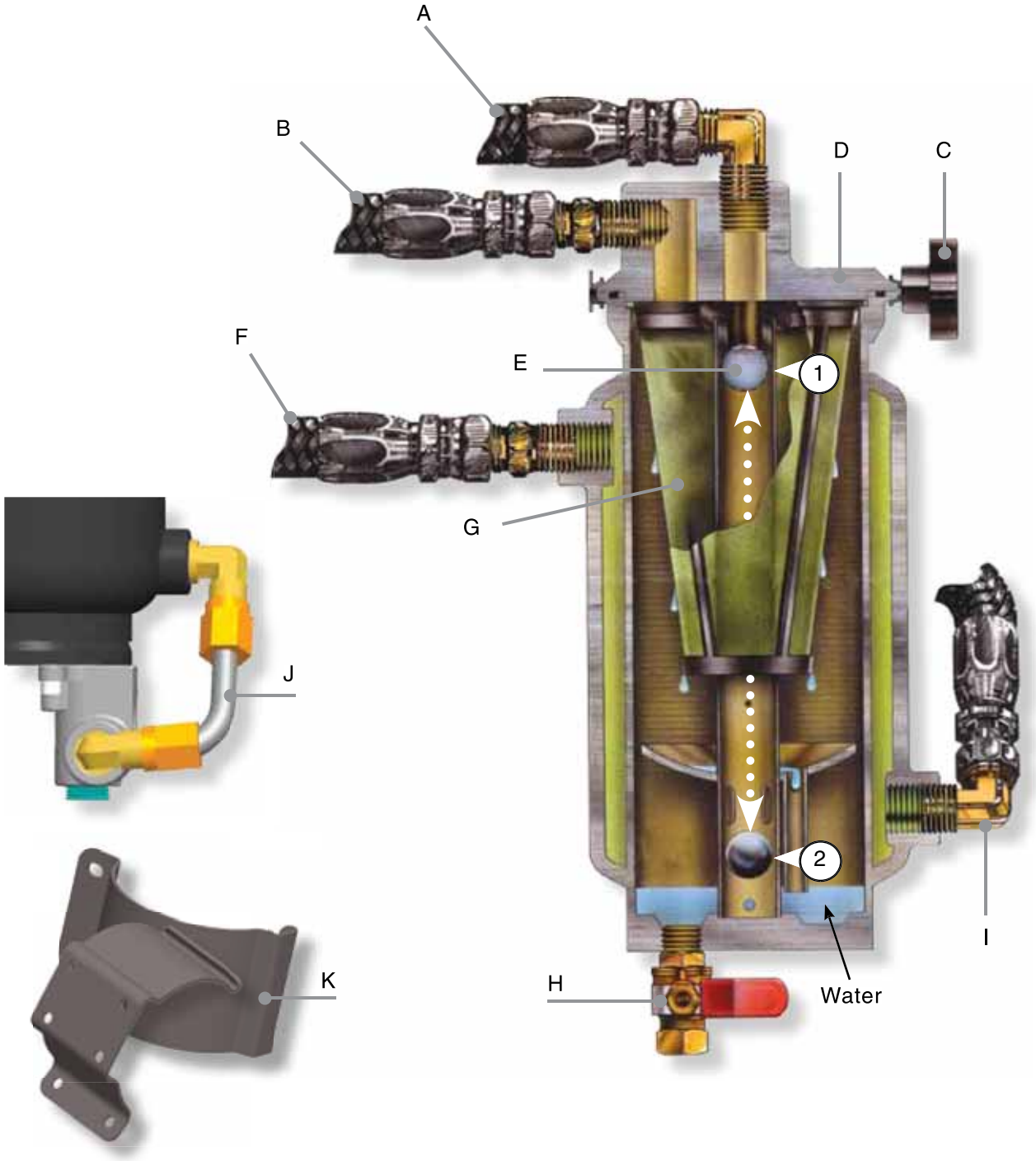

600 Series

645R

Fuel Heater/Water Separator

All 600 Series Spin-On fuel filter/water separators feature multiple fuel ports (4 inlets and 3 outlets) and a unitized mounting bracket for installation convenience. Inlet and outlet threads are 3/8”-18 NPTF for all models. These filter assemblies provide flexibility during mounting and fit any engine application.

Additional 600 Series features include Spin-On high capacity, Aquabloc® II replaceable filter elements which stop water, remove solid contamination, and are available in 2, 10 and 30 micron. Filtration needs should be based on application, fuel quality, operating climates, and maintenance schedules.

Specifications	
Maximum Flow Rate: (with diesel)	45 GPH (170 LPH)
Inlet/Outlet Port Size	3/8”-18 NPTF
Housing Material	Aluminum
Replacement Element	See Element Chart
Center Threads	1”-14
Minimum Service Clearance (below filter)	2.0 in. (5.1 cm)
Height	8.5 in. (21.6 cm)
Depth	4.5 in. (11.4 cm)
Width	4.5 in. (11.4 cm)
Weight (dry)	2.4 lb (1.09 kg)
Maximum Working Pressure[1]	30 PSI (2.07 bar)
Water Removal Efficiency	99%
Clean Pressure Drop	0.01 PSI (0.001 bar)
Case Quantity	6
Ambient Temperature Range	-40° to +250°F (-40° to +121°C)
Maximum Fuel Temperature	190°F (32°C)

Notes: [1]Vacuum side installations only.

Questions? Contact Technical Support:
800 344 3286 or 209 521 7860 ext. 7555
e-mail: racortech@parker.com

600 Series

660R

Fuel Heater/Water Separator

All 600 Series Spin-On fuel filter/water separators feature multiple fuel ports (4 inlets and 3 outlets) and a unitized mounting bracket for installation convenience. Inlet and outlet threads are 3/8”-18 NPTF for all models. These filter assemblies provide flexibility during mounting and fit any engine application.

Additional 600 Series features include Spin-On high capacity, Aquabloc® II replaceable filter elements which stop water, remove solid contamination, and are available in 2, 10 and 30 micron. Filtration needs should be based on application, fuel quality, operating climates, and maintenance schedules.

Specifications	
Maximum Flow Rate: (with diesel)	60 GPH (227 LPH)
Inlet/Outlet Port Size	3/8”-18 NPTF
Housing Material	Aluminum
Replacement Element	See Element Cart
Center Threads	1”-14
Minimum Service Clearance (below filter)	2.0 in. (5.1 cm)
Height	10.2 in. (25.9 cm)
Depth	4.5 in. (11.4 cm)
Width	4.5 in. (11.4 cm)
Weight (dry)	2.6 lb (1.18 kg)
Maximum Working Pressure[1]	30 PSI (2.07 bar)
Water Removal Efficiency	99%
Clean Pressure Drop	0.05 PSI (0.003 bar)
Case Quantity	6
Ambient Temperature Range	-40° to +250°F (-40° to +121°C)
Maximum Fuel Temperature	190°F (32°C)

Notes: [1]Vacuum side installations only.

Questions? Contact Technical Support:
800 344 3286 or 209 521 7860 ext. 7555
e-mail: racortech@parker.com

Parker Racor

600 Series

690R

Fuel Heater/Water Separator

All 600 Series Spin-On fuel filter/water separators feature multiple fuel ports (4 inlets and 3 outlets) and a unitized mounting bracket for installation convenience. Inlet and outlet threads are 3/8”-18 NPTF for all models. These filter assemblies provide flexibility during mounting and fit any engine application.

Additional 600 Series features include Spin-On high capacity, Aquabloc® II replaceable filter elements which stop water, remove solid contamination, and are available in 2, 10 and 30 micron. Filtration needs should be based on application, fuel quality, operating climates, and maintenance schedules.

Specifications	
Maximum Flow Rate: (with diesel)	90 GPH (341 LPH)
Inlet/Outlet Port Size	3/8”-18 NPTF
Housing Material	Aluminum
Replacement Element	See Element Chart
Center Threads	1”-14
Minimum Service Clearance (below filter)	2.0 in. (5.1 cm)
Height	11.2 in. (28.4 cm)
Depth	4.5 in. (11.4 cm)
Width	4.5 in. (11.4 cm)
Weight (dry)	2.7 lb (1.22 kg)
Maximum Working Pressure[1]	30 PSI (2.07 bar)
Water Removal Efficiency	99%
Clean Pressure Drop	0.29 PSI (0.02 bar)
Case Quantity	6
Ambient Temperature Range	-40° to +250°F (-40° to +121°C)
Maximum Fuel Temperature	190°F (32°C)

Notes: [1]Vacuum side installations only.

Questions? Contact Technical Support:
800 344 3286 or 209 521 7860 ext. 7555
e-mail: racortech@parker.com

600 Series

6120R

Fuel Heater/Water Separator

All 600 Series Spin-On fuel filter/water separators feature multiple fuel ports (4 inlets and 3 outlets) and a unitized mounting bracket for installation convenience. Inlet and outlet threads are 3/8”-18 NPTF for all models. These filter assemblies provide flexibility during mounting and fit any engine application.

Additional 600 Series features include Spin-On high capacity, Aquabloc® II replaceable filter elements which stop water, remove solid contamination, and are available in 2, 10 and 30 micron. Filtration needs should be based on application, fuel quality, operating climates, and maintenance schedules.

Specifications	
Maximum Flow Rate: (with diesel)	120 GPH (454 LPH)
Inlet/Outlet Port Size	3/8”-18 NPTF
Housing Material	Aluminum
Replacement Element	See Element Chart
Center Threads	1”-14
Minimum Service Clearance (below filter)	2.0 in. (5.1 cm)
Height	14.1 in. (35.8 cm)
Depth	4.5 in. (11.4 cm)
Width	4.5 in. (11.4 cm)
Weight (dry)	3.9 lb (1.8 kg)
Maximum Working Pressure[1]	15 PSI (1.03 bar)
Water Removal Efficiency	99%
Clean Pressure Drop	2.65 PSI (0.18 bar)
Case Quantity	6
Ambient Temperature Range	-40° to +250°F (-40° to +121°C)
Maximum Fuel Temperature	190°F (32°C)

Notes: [1]Vacuum side installations only.

Questions? Contact Technical Support:
800 344 3286 or 209 521 7860 ext. 7555
e-mail: racortech@parker.com

Parker Racor

600 Series

600 Series Overview

Specifications	645R	660R	690R	6120R
Maximum Flow Rate	45 GPH (170 LPH)	60 GPH (227 LPH)	90 GPH (341 LPH)	120 GPH (454 LPH)
Port Size (SAE J476)	3/8”-18 NPTF	3/8”-18 NPTF	3/8”-18 NPTF	3/8”-18 NPTF
Total Number of Ports: **(total inlets)** **(total outlets)**	7 4 3	7 4 3	7 4 3	7 4 3
Min. Service Clearance	2.0 in. (5.1 cm)	2.0 in. (5.1 cm)	2.0 in. (5.1 cm)	2.0 in. (5.1 cm)
Center Threads	1”-14	1”-14	1”-14	1”-14
Height	8.5 in. (21.6 cm)	10.2 in. (25.9 cm)	11.2 in. (28.4 cm)	14.1 in. (35.8 cm)
Depth	4.5 in. (11.4 cm)	4.5 in. (11.4 cm)	4.5 in. (11.4 cm)	4.5 in. (11.4 cm)
Width	4.5 in. (11.4 cm)	4.5 in. (11.4 cm)	4.5 in. (11.4 cm)	4.5 in. (11.4 cm)
Weight (dry)	2.4 lb (1.09 kg)	2.6 lb (1.18 kg)	2.7 lb (1.22 kg)	3.9 lb (1.8 kg)
Clean Pressure Drop	0.01 PSI (0.001 bar)	0.05 PSI (0.003 bar)	0.29 PSI (0.02 bar)	2.65 PSI (0.18 bar)
Max. Allowable Pressure[1]	30 PSI (2.07 bar)	30 PSI (2.07 bar)	30 PSI (2.07 bar)	15 PSI (1.03 bar)
Available Options:[2] **(water sensor)** **(heater)**[3]	 Yes Yes	 Yes Yes	 Yes Yes	 Yes Yes
Bowl Capacity (water) **(with heater)**	4.0 oz. (118 ml) 3.5 oz. (104 ml)	4.0 oz. (118 ml) 3.5 oz. (104 ml)	4.0 oz. (118 ml) 3.5 oz. (104 ml)	2.8 oz. (82 ml) 2.4 oz. (70 ml)
H_2O Removal Efficiency	99%			
Operating Temperature	-40° to +255°F (-40° to +124°C)			

[1] Pressure installations are applicable up to maximum PSI shown. Vacuum installations are recommended.
[2] Not for use with gasoline applications.
[3] Maximum power requirements for in-bowl heater option: 12 vdc (200 watt) = 16.6 amps, 24 vdc (200 watt) = 8.3 amps - see Accessories section for heater relay kits, if needed.

Questions? Contact Technical Support:
800 344 3286 or 209 521 7860 ext. 7555
e-mail: racortech@parker.com

600 Series

How to Order

***645R122**

Add an *: for optional 16 mm fuel ports[1]. (omit if not desired)

Specify a model number: 645R, 660R, 690R, or 6120R.

Specify a micron rating: 2, 10, or 30.

Add 12 or 24: for a 12 or 24 volt dc heater[2]. (omit if not desired)

[1] Standard fuel ports are 3/8”-18 NPTF.
[2] Use with Racor relay kit - see Accessories.

Replacement Elements			
Model Number	2 Micron (Final Filtration)	10 Micron (Secondary Filtration)	30 Micron (Primary Filtration)
645R	R45S	R45T	R45P
660R	R60S	R60T	R60P
690R	R90S	R90T	R90P
6120R	R120S	R120T	R120P

Mounting Information

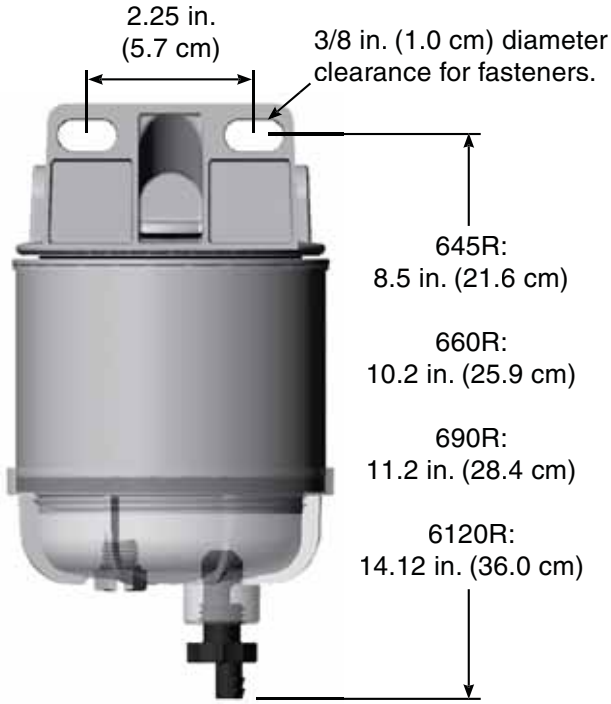

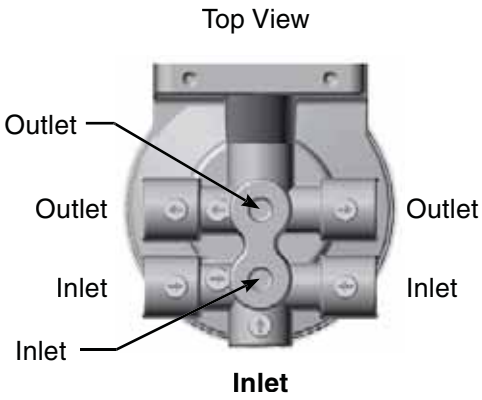

Questions? Contact Technical Support:
800 344 3286 or 209 521 7860 ext. 7555
e-mail: racortech@parker.com

Parker Racor

600 Series

Replacement Parts

645R, 660R and 690R

	Part Number	Description
1.	**RK22098**	Mounting Head Kit (3/8”-18 NPTF) (includes #2 & Plug Kit 3/8” NPT)
	RK 22423	Mounting Head Kit (Metric) (16 mm X 1.5) (includes #2)
2.	**RK22998**	Element Gasket Kit
3.	See Replacement Element Chart	
4.	**RK 22333**	Bowl Gasket Kit
5.	Replacement Bowl Kits (includes bowl, #4 , #6 and #7)	
	RK 21113-13-11[1]	Clear Bowl Kit
	RK 22616-01[2]	Heated Clear Bowl Kit (same as above, 12 vdc heater)
	RK 22616-02[2]	Heated Clear Bowl Kit (same as above, 24 vdc heater)
6.	**RK 20126**	Bowl Plug Kit (1/2” SAE)
7.	**RK 30476**	Drain Valve Assembly Kit
8.	**RK 30964**[3]	Water Probe Kit
	Additional Parts Not Shown	
	01SP-6S	Metal Plug (3/8” NPTF)
	22231	Plug Kit 3/8” NPT
	RK 22323	Heater Connector Kit
	22249	Installation Instructions

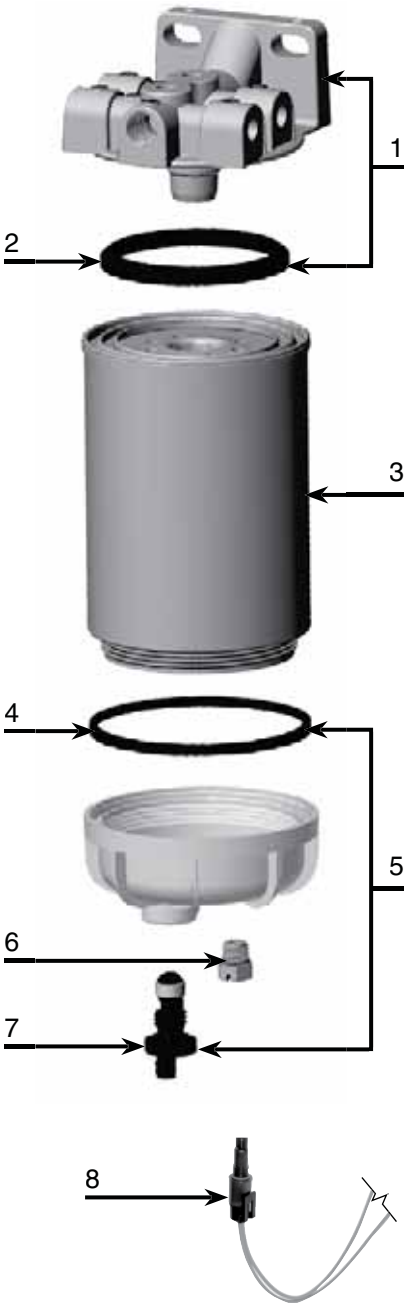

Notes:

[1] Includes water probe port plug 1/2” SAE.

[2] In-bowl heater may require a Heater Relay Kit. Maximum power requirements are: 12 vdc =16.6 amps, 24 vdc = 8.3 amps.

[3] Water probe must be used with a Water Detection Kit - see Accessories. Do not use on gasoline applications.

Questions? Contact Technical Support:
800 344 3286 or 209 521 7860 ext. 7555
e-mail: racortech@parker.com

600 Series

Replacement Parts

6120R

	Part Number	Description
1.	**RK22098**	Mounting Head Kit (3/8”-18 NPTF) (includes #2 & Plug Kit 3/8” NPT)
	RK 22423	Mounting Head Kit (Metric) (16 mm X 1.5) (includes #2)
2.	**RK22998**	Element Gasket Kit
3.	See Replacement Element Chart	
4.	**RK 30965**	Bowl Gasket Kit
5.	Replacement Bowl Kits (includes Bowl, #4, #6 and #7)	
	RK 30063[1]	Clear Bowl Kit
	RK 30900[2]	Heated Clear Bowl Kit (same as above, 12 vdc heater)
	RK 30925[2]	Heated Clear Bowl Kit (same as above, 24 vdc heater)
6.	**RK 20126**	Bowl Plug Kit (1/2” SAE)
7.	**RK 30476**	Self-Venting Drain Kit
8.	**RK 30964**[3]	Water Probe Kit

Additional Parts (not shown)

01SP-6S	Metal Plug (3/8” NPTF)
22231	Plug Kit 3/8” NPT
RK 30876	Heater Connector Kit
RK 30058	Drain Valve Seal Kit
22249	Installation Instructions

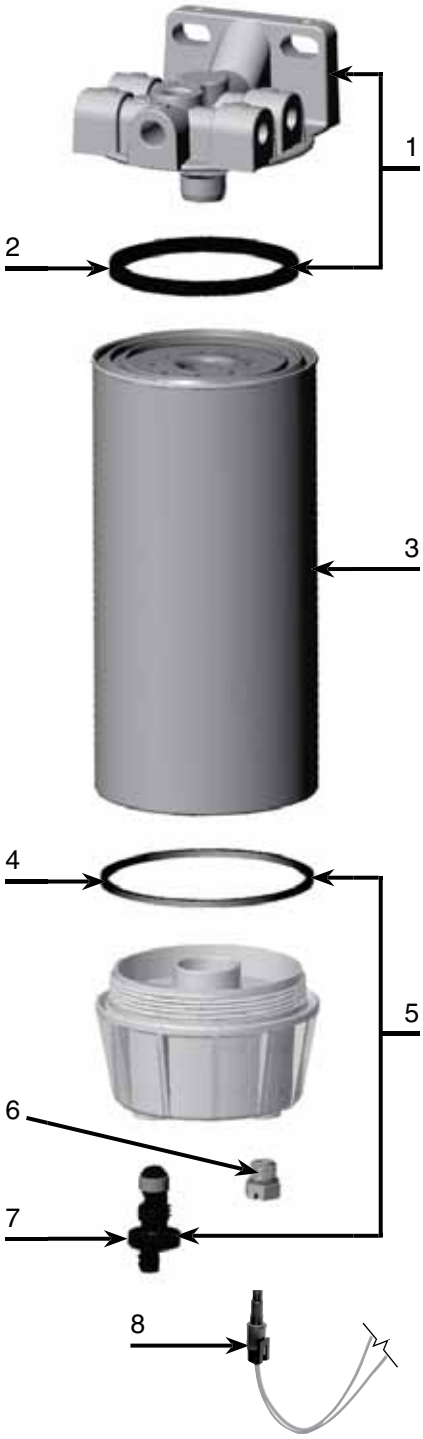

Notes:

[1] Includes water probe port plug 1/2” SAE.

[2] In-bowl heater may require a Heater Relay Kit. Maximum power requirements are: 12 vdc =16.6 amps, 24 vdc = 8.3 amps.

[3] Water probe must be used with a Water Detection Kit - see Accessories. Do not use on gasoline applications.

600 Series

Test Data

645R

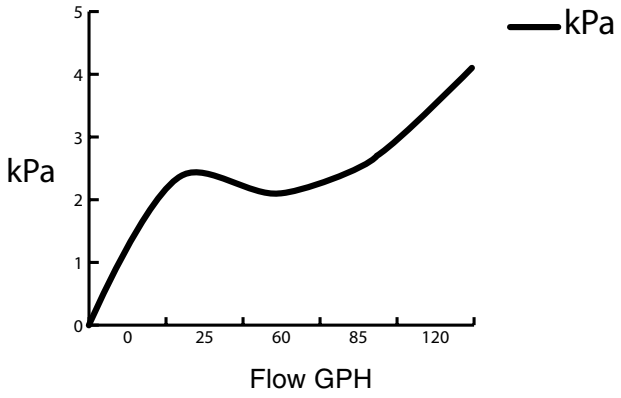

660R

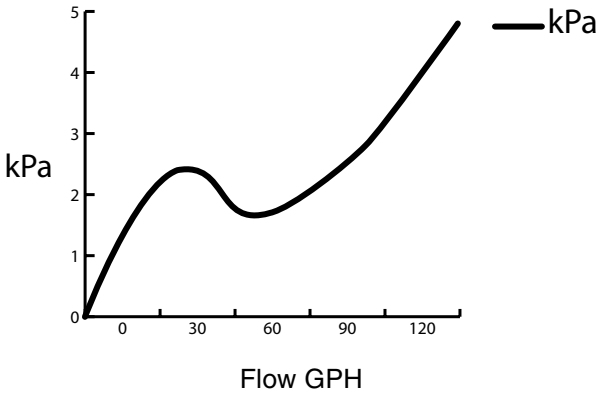

690R

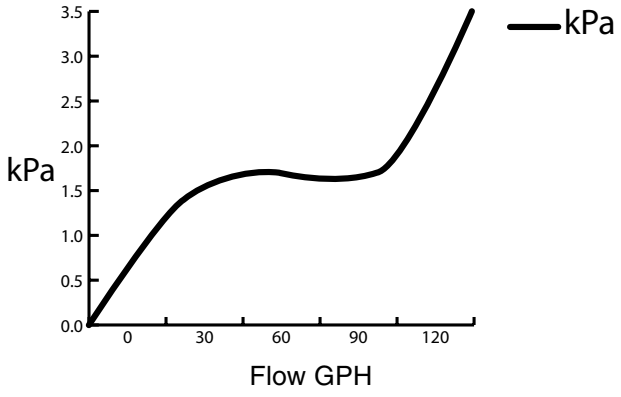

6120R

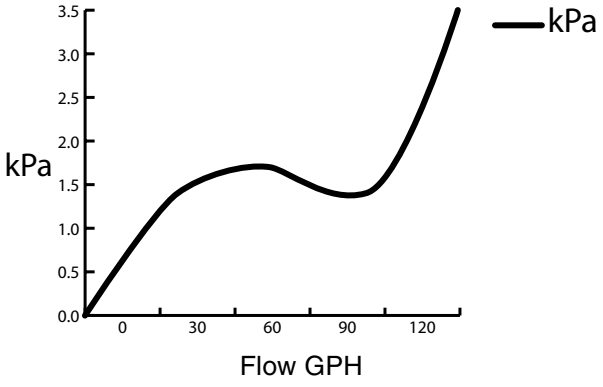

Test results are from controlled laboratory testing. Field results may vary.
(PSI X 2.036 = inHG) (PSI X 6.895 = kPa)

Nautilus

Nautilus Series fuel filter/water separators use a unique, patented coalescing Spin-On element that enhances centrifugal force thereby pulling 99% of the suspended free water from fuel. The Nautilus element, S6464, is self-cleaning and does not require replacement under normal operating conditions; it is not a particulate removing filter.

The 6400/6401 models feature an internal heat exchanger, which uses hot engine coolant to heat the incoming fuel. The fittings fit 5/8" I.D. coolant hoses and attach to the pressure side, up to 35 PSI (2.4 bar), of the engine cooling system.

Additionally, the 6401 model also includes an internal coolant shut-off valve which is automatically controlled by a thermostat which opens at approximately 45°F (7.2°C) and closes at 100°F (37.7°C).

Heating the fuel dissolves paraffin wax crystals that form when diesel fuel is chilled thus enabling water separation to occur more efficiently and prevents downstream fuel filters from plugging with wax and/or ice crystals.

Nautilus assemblies are for PRIMARY filtration and separation use only. A secondary filter is required downstream. Model 6400 features a coolant heat exchanger as standard; a customer supplied shut-off valve may be required. Model 6401 features an internal automatic thermostat (shuts off coolant flow to heat exchanger to control fuel temperature).

6400/6401

Specifications	6400/6401
Maximum Flow Rate: **(with S3226P element)** **(with S6464 coalescer element)**	 75 GPH (284 LPH) 120 GPH (454 LPH)
Port Size: **(inlet/outlet fuel)** **(coolant fittings)**	 7/8"-14 SAE 5/8" Hose Barb
Service Filter Element	S6464 or S3226P
Service Clearance (below filter)	2.0 in. (5.1 cm)
Center Threads	1"-14
Height	16.5 in. (41.9 cm)
Width	6.0 in. (15.2 cm)
Depth	6.0 in. (15.2 cm)
Weight (dry)	11.3 lb (5.1 kg)
Clean Pressure Drop	0.5 PSI (0.03 bar)
Max. Allowable Pressure	15 PSI (1.03 bar)
Bowl Capacity (water) **(to probe tips)** **(with Heater)**	 2.8 oz. (82 ml) 2.4 oz. (70 ml)
H_2O Removal Efficiency	99%
Operating Temperature	-40° to +255°F (-40° to +124°C)

Nautilus

How to Order

(the example below illustrates how a part number is constructed)

6401	N
Specify: **6400** (no thermostat valve), or **6401** (with thermostat valve)	Specify: [1] **N** coalescer element. (omit if not desired)

[1] 30 micron S3226P element is standard unless **N** option is selected for coalescer element (see below).

Replacement Elements

S6464	S3226P
Coalescer Element (removes water only from fuel; does not remove sediment). This filter is self-cleaning and does not require replacement under normal operating conditions.*	30 Micron Element (removes sediment and separates water)*

*A secondary/final filter must be in the downstream fuel system.

Test Data

Test results are from controlled laboratory testing. Field results may vary by application.

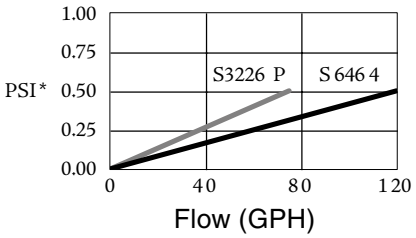

SAE J905 Fuel Flow Restriction

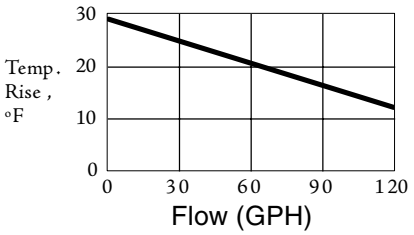

6400 Heat Rise vs Flow
Fuel = -10°F
Coolant = +185°F @ 5 gpm

*PSI X 2.036 = inHg / PSI X 6.895 = kPa

Questions? Contact Technical Support:
800 344 3286 or 209 521 7860 ext. 7555
e-mail: racortech@parker.com

Nautilus

Mounting Information

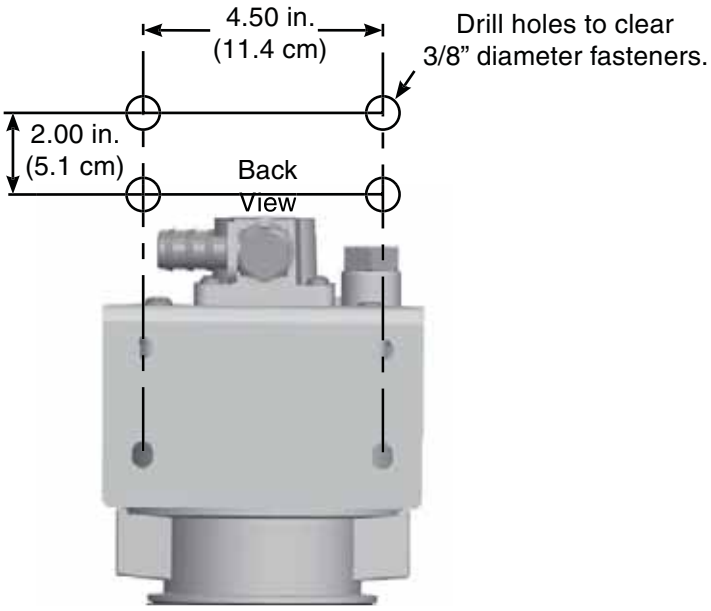

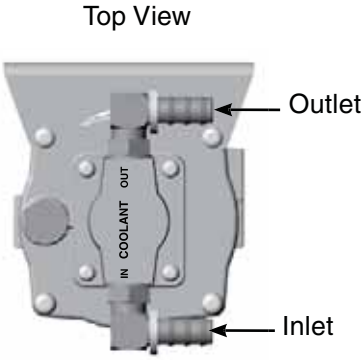

Important:

The fuel and coolant port orientation may be changed to suit any installation. Fuel ports may face opposite direction by repositioning L-bracket on opposite side along with clamp bracket. Torque 5/16” bracket fasteners to 20 ft. lbs.

Coolant fittings may be repositioned within a 180º arc by loosening the locknuts. Reposition and tighten locknuts snugly. Coolant in/out manifold may be repositioned opposite as shown; torque 1/4” fasteners to 20 ft. lbs.

Nautilus

Installation Diagram

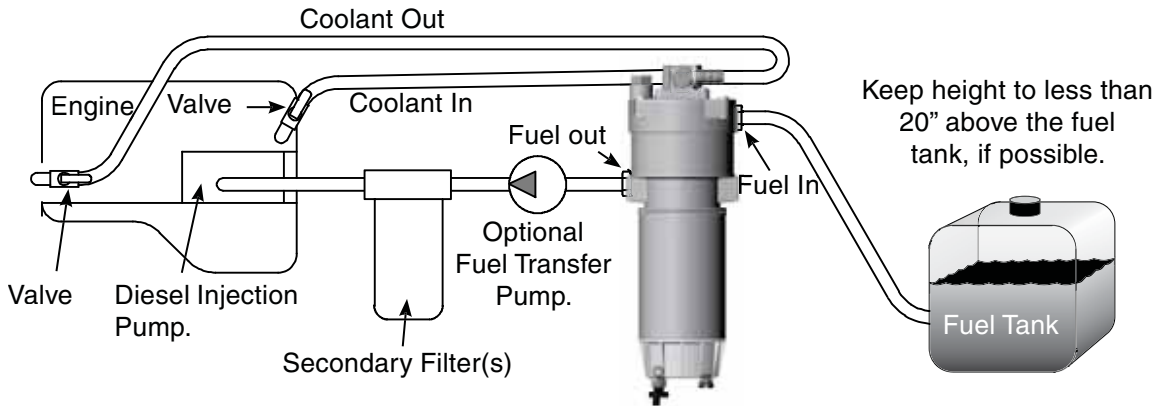

Coolant Plumbing Alternatives

Parallel System with a cab heater.

Manual shut-off valves (customer supplied) maybe used to regulate coolant to the Racor unit for summer use, if desired.

Valve Positions:

Open: About equal flow through Racor and cab heater. Closed: All coolant to the cab heater.

Parallel System with an air compressor.

Manual shut-off valves (customer supplied) may be use, if desired.

Valve Positions:

Open: About equal flow through Racor and air compressor. Closed: All coolant to the air compressor

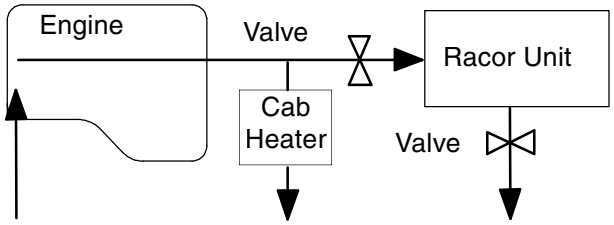

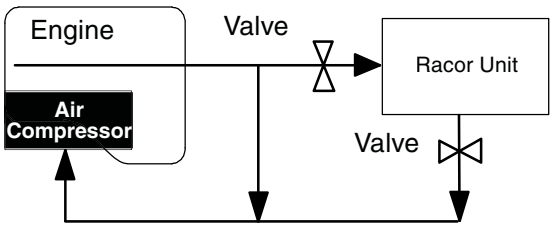

Questions? Contact Technical Support:
800 344 3286 or 209 521 7860 ext. 7555
e-mail: racortech@parker.com

Nautilus

6400/6401

Please refer to page 132 for call out descriptions.

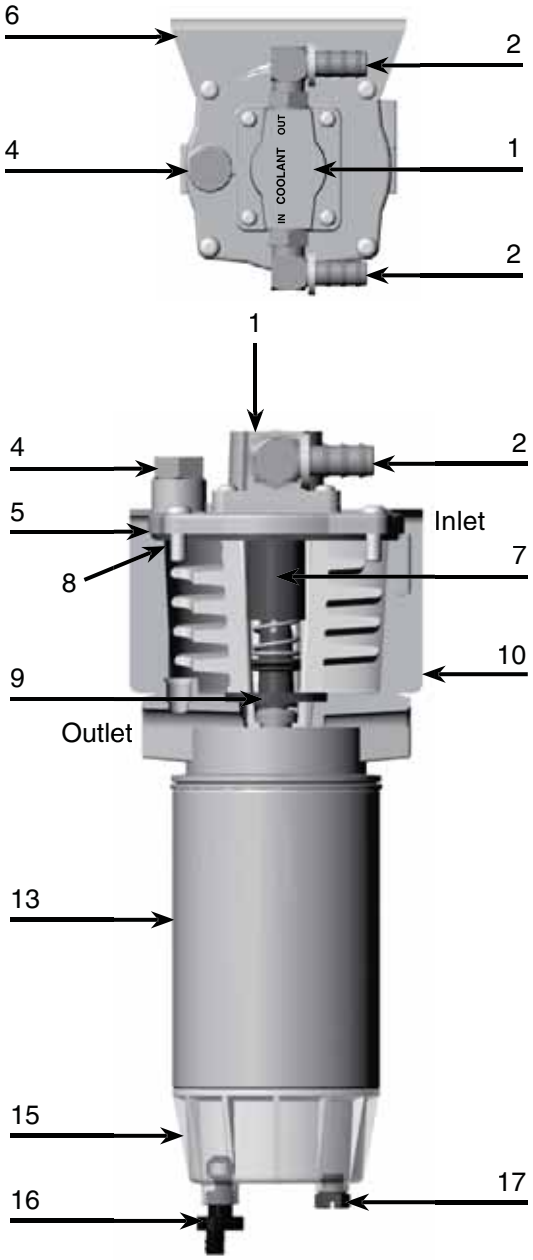

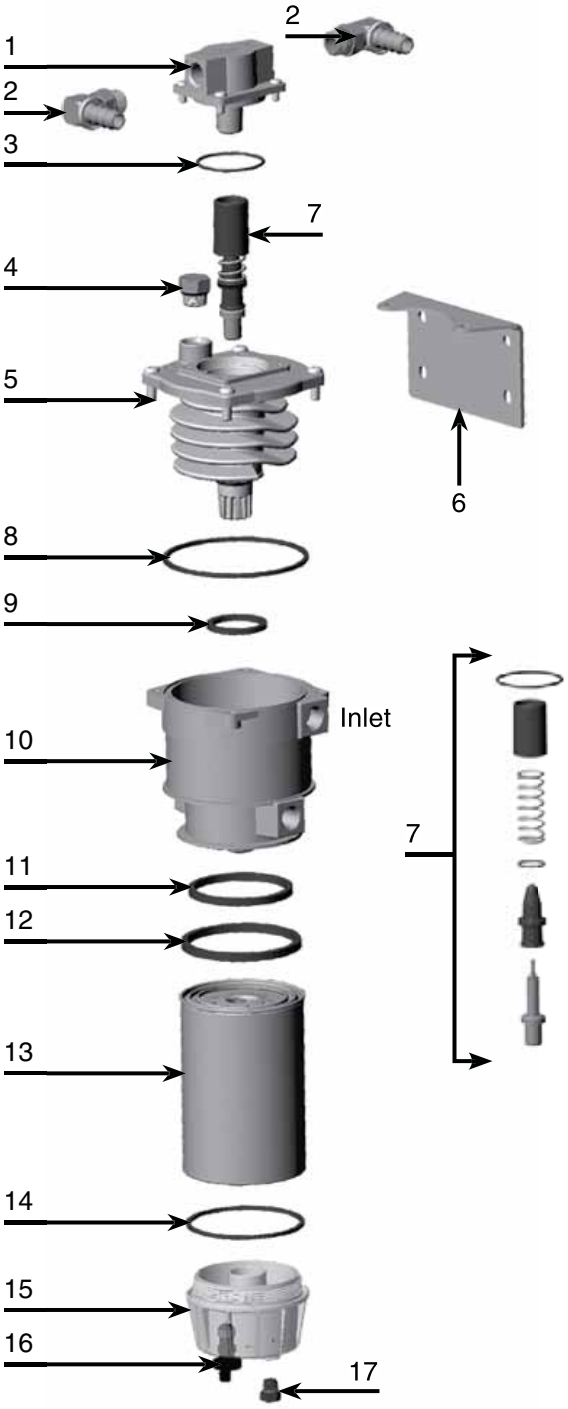

Nautilus

Replacement Parts

6400 / 6401

	Part Number	Description
1.	**RK 16070**	Coolant Head Kit (includes #3)
2.	**913-O10-H10**	Standard Elbow Fitting (5/8" hose barb)
	913-O10-H12	Optional Elbow Fitting (¾" hose harb)
3.	**16083**	Coolant Head O-ring
4.	**RK 11911**	Priming Port Plug Kit
5.	**RK 16007**	Heat Exchanger Kit (includes #'s 8 and 9)
6.	**RK 16073**	L-Bracket Kit
7.	**RK 16086** (includes #3)	Thermostat Valve Kit
8.	**16083**	Coolant Head O-ring
9.	**16029**	Heat Exchanger Base Seal
10.	**RK 16076**	Head Assembly Kit (includes #'s 8 and 9)
11.	**20505**	Element Gasket (for S6464 coalescing element)
12.	**40685**	Element Gasket (for S3226P 30 micron element)

	Part Number	Description
13.	**S6464**	Water Coalescing Element (includes #11 and 14)
	S3226P	30 Micron Filter Element (includes #12 and 14)
14.	**30965**	Bowl Gasket
15.	Replacement Bowls (includes #'s 14 to 17)	
	RK 30063	Bowl and Drain Kit
	RK 30900[1]	Same as Above with 12 vdc Heater
	RK 30925[1]	Same as Above with 24 vdc Heater
16.	**RK 30476**	Self-venting Drain Valve Kit
17.	**RK 20126**	Water Port Plug Kit

Additional Parts (not shown)

RK 16040	Complete Seal Service Kit
RK 30964[2]	Water Probe Kit
16104	Installation Instructions

Notes:

[1] In-bowl heater may require a heater relay kit.

[2] Water probe must be used with a water detection kit - see Accessories.

700 Series

745R30

Fuel Heater/Water Separator

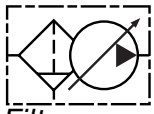

Filterpump

The 700 series fuel filter/water separator assembly is a two-stage filtration and repriming system featuring a 12 volt solid-state controlled electronic priming pump, a vent valve to purge air, a 100 micron prefilter screen, a 30 micron Aquabloc®II Spin-On element, a water sensor probe, a clear collection bowl and a weather proof control box. This complete fuel management system isolates contaminants present in diesel fuels and traps them prior to reaching the fuel injection system, protecting the engine's fuel system from costly and premature failure.

Note:
All Racor filter materials and seals are compatible with ultra-low sulphur diesel (ULSD) fuel and B2 to B20 Biodiesel.

Specifications	
Maximum Flow Rate: (with diesel)	45 GPH (170 LPH)
Inlet/Outlet Port Size	7/8"-14 UNF
Housing Material	Aluminum
Replacement Element	See Element Chart
Micron Rating	30
Minimum Service Clearance (below filter)	2.0 in. (5.1 cm)
Height	10.8 in. (25.7 cm)
Depth	6.5 in. (16.5 cm)
Width	4.3 in. (11.0 cm)
Weight (dry)	4.5 lbs (2.0 kg)
Maximum Working Pressure[1]	15.0 PSI (1.0 bar)
Water Removal Efficiency	99%
Clean Pressure Drop	0.7 PSI (4.8 kPa)
Case Quantity	6
Ambient Temperature Range	-40° to +250°F (-40° to +121°C)
Maximum Fuel Temperature	190°F (32°C)

Notes: [1]Vacuum side installations only.

700 Series

760R30

Fuel Heater/Water Separator

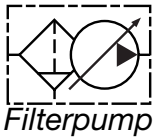

Filterpump

The 700 series fuel filter/water separator assembly is a two-stage filtration and repriming system featuring a 12 volt solid-state controlled electronic priming pump, a vent valve to purge air, a 100 micron prefilter screen, a 30 micron Aquabloc®II Spin-On element, a water sensor probe, a clear collection bowl and a weather proof control box. This complete fuel management system isolates contaminants present in diesel fuels and traps them prior to reaching the fuel injection system, protecting the engine's fuel system from costly and premature failure.

Note:
All Racor filter materials and seals are compatible with ultra-low sulphur diesel (ULSD) fuel and B2 to B20 Biodiesel.

Specifications	
Maximum Flow Rate: (with diesel)	60 GPH (227 LPH)
Inlet/Outlet Port Size	7/8"-14 UNF
Housing Material	Aluminum
Replacement Element	See Element Chart
Micron Rating	30
Minimum Service Clearance (below filter)	2.0 in. (5.1 cm)
Height	11.8 in. (28.4 cm)
Depth	6.5 in. (16.5 cm)
Width	4.3 in. (11.0 cm)
Weight (dry)	5.5 lbs (2.5 kg)
Maximum Working Pressure[1]	15.0 PSI (1.0 bar)
Water Removal Efficiency	99%
Clean Pressure Drop	0.7 PSI (4.8 kPa)
Case Quantity	6
Ambient Temperature Range	-40° to +250°F (-40° to +121°C)
Maximum Fuel Temperature	190°F (32°C)

Notes: [1]Vacuum side installations only.

Questions? Contact Technical Support:
800 344 3286 or 209 521 7860 ext. 7555
e-mail: racortech@parker.com

700 Series

790R30

Fuel Heater/Water Separator

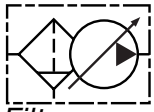

Filterpump

The 700 series fuel filter/water separator assembly is a two-stage filtration and repriming system featuring a 12 volt solid-state controlled electronic priming pump, a vent valve to purge air, a 100 micron prefilter screen, a 30 micron Aquabloc®II Spin-On element, a water sensor probe, a clear collection bowl and a weather proof control box. This complete fuel management system isolates contaminants present in diesel fuels and traps them prior to reaching the fuel injection system, protecting the engine's fuel system from costly and premature failure.

Note:
All Racor filter materials and seals are compatible with ultra-low sulphur diesel (ULSD) fuel and B2 to B20 Biodiesel.

Specifications	
Maximum Flow Rate: (with diesel)	90 GPH (341 LPH)
Inlet/Outlet Port Size	7/8"-14 UNF
Housing Material	Aluminum
Replacement Element	See Element Chart
Micron Rating	30
Minimum Service Clearance (below filter)	2.0 in. (5.1 cm)
Height	12.8 in. (32.5 cm)
Depth	6.5 in. (16.5 cm)
Width	4.3 in. (11.0 cm)
Weight (dry)	6.5 lb (3.0 kg)
Maximum Working Pressure[1]	15.0 PSI (1.0 bar)
Water Removal Efficiency	99%
Clean Pressure Drop	0.7 PSI (4.8 kPa)
Case Quantity	6
Ambient Temperature Range	-40° to +250°F (-40° to +121°C)
Maximum Fuel Temperature	190°F (32°C)

Notes: [1]Vacuum side installations only.

Questions? Contact Technical Support:
800 344 3286 or 209 521 7860 ext. 7555
e-mail: racortech@parker.com

Parker Racor

700 Series

790R3024

Fuel Heater/Water Separator

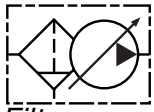

Filterpump

The 700 series fuel filter/water separator assembly is a two-stage filtration and repriming system featuring a 24 volt solid-state controlled electronic priming pump, a vent valve to purge air, a 100 micron prefilter screen, a 30 micron Aquabloc®II Spin-On element, a water sensor probe, a clear collection bowl, push button and a wire harness. This complete fuel management system isolates contaminants present in diesel fuels and traps them prior to reaching the fuel injection system, protecting the engine's fuel system from costly and premature failure.

Note:
All Racor filter materials and seals are compatible with ultra-low sulphur diesel (ULSD) fuel and B2 to B20 Biodiesel.

Specifications	
Maximum Flow Rate: (with diesel)	90 GPH (341 LPH)
Inlet/Outlet Port Size	7/8"-14 UNF
Housing Material	Aluminum
Replacement Element	See Element Chart
Micron Rating	30
Minimum Service Clearance (below filter)	2.0 in. (5.1 cm)
Height	12.8 in. (32.5 cm)
Depth	7.1 in (18.0 cm)
Width	4.3 in. (11.0 cm)
Weight (dry)	6.5 lb (3.0 kg)
Maximum Working Pressure[1]	15.0 PSI (1.0 bar)
Water Removal Efficiency	99%
Clean Pressure Drop	0.7 PSI (4.8 kPa)
Case Quantity	6
Ambient Temperature Range	-40° to +250°F (-40° to +121°C)
Maximum Fuel Temperature	190°F (32°C)

Notes: [1]Vacuum side installations only.

Questions? Contact Technical Support:
800 344 3286 or 209 521 7860 ext. 7555
e-mail: racortech@parker.com

700 Series

7125R30

Fuel Heater/Water Separator

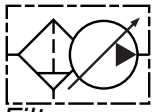

Filterpump

The 700 series fuel filter/water separator assembly is a two-stage filtration and repriming system featuring a 12 volt solid-state controlled electronic priming pump, a vent valve to purge air, a 100 micron prefilter screen, a 30 micron Aquabloc®II Spin-On element, a water sensor probe, a clear collection bowl and a weather proof control box. This complete fuel management system isolates contaminants present in diesel fuels and traps them prior to reaching the fuel injection system, protecting the engine's fuel system from costly and premature failure.

Note:
All Racor filter materials and seals are compatible with ultra-low sulphur diesel (ULSD) fuel and B2 to B20 Biodiesel.

Specifications	
Maximum Flow Rate: (with diesel)	120 GPH (454 LPH)
Inlet/Outlet Port Size	7/8"-14 UNF
Housing Material	Aluminum
Replacement Element	See Element Chart
Micron Rating	30
Minimum Service Clearance (below filter)	2.0 in. (5.1 cm)
Height	15.2 in. (36.6 cm)
Depth	6.5 in. (16.5 cm)
Width	4.3 in. (11.0 cm)
Weight (dry)	6.7 lb (3.03 kg)
Maximum Working Pressure[1]	15.0 PSI (1.0 bar)
Water Removal Efficiency	99%
Clean Pressure Drop	0.7 PSI (4.8 kPa)
Case Quantity	6
Ambient Temperature Range	-40° to +250°F (-40° to +121°C)
Maximum Fuel Temperature	190°F (32°C)

Notes: [1]Vacuum side installations only.

Questions? Contact Technical Support:
800 344 3286 or 209 521 7860 ext. 7555
e-mail: racortech@parker.com

Parker Racor

700 Series

7125R3024

Fuel Heater/Water Separator

The 700 series fuel filter/water separator assembly is a two-stage filtration and repriming system featuring a 24 volt solid-state controlled electronic priming pump, a vent valve to purge air, a 100 micron prefilter screen, a 30 micron Aquabloc®II Spin-On element, a water sensor probe, a clear collection bowl, push button and a wire harness. This complete fuel management system isolates contaminants present in diesel fuels and traps them prior to reaching the fuel injection system, protecting the engine's fuel system from costly and premature failure.

Note:
All Racor filter materials and seals are compatible with ultra-low sulphur diesel (ULSD) fuel and B2 to B20 Biodiesel.

Specifications	
Maximum Flow Rate: (with diesel)	120 GPH (454 LPH)
Inlet/Outlet Port Size	7/8"-14 UNF
Housing Material	Aluminum
Replacement Element	See Element Chart
Micron Rating	30
Minimum Service Clearance (below filter)	2.0 in. (5.1 cm)
Height	15.2 in. (36.6 cm)
Depth	7.1 in (18.0 cm)
Width	4.3 in. (11.0 cm)
Weight (dry)	6.7 lb (3.03 kg)
Maximum Working Pressure[1]	15.0 PSI (1.0 bar)
Water Removal Efficiency	99%
Clean Pressure Drop	0.7 PSI (4.8 kPa)
Case Quantity	6
Ambient Temperature Range	-40° to +250°F (-40° to +121°C)
Maximum Fuel Temperature	190°F (32°C)

Notes: [1]Vacuum side installations only.

Questions? Contact Technical Support:
800 344 3286 or 209 521 7860 ext. 7555
e-mail: racortech@parker.com

700 Series Overview

	745R30	760R30	790R30	790R3024	7125R30	7125R3024
Power	12 volt	12 volt	12 volt	24 volt	12 volt	24 volt
Max Flow Rate	45 GPH (170 LPH)	60 GPH (227 LPH)	90 GPH (341 LPH)	90 GPH (341 LPH)	120 GPH (454 LPH)	120 GPH (454 LPH)
Port Size (SAE J1926)	7/8”-14 UNF	7/8”-14 UNF	7/8”-14 UNF	7/8”-14 UNF	7/8”-14 UNF	7/8”-14 UNF
Height	10.8 in. (25.7 cm)	11.8 in. (28.4 cm)	12.8 in. (31.2 cm)	12.8 in. (31.2 cm)	15.2 in. (38.5 cm)	15.2 in. (38.5 cm)
Width	4.3 in. (11.0 cm)	4.3 in. (11.0 cm)	4.3 in. (11.0 cm)	4.3 in. (11.0 cm)	4.3 in. (11.0 cm)	4.3 in. (11.0 cm)
Depth	6.5 in. (16.5 cm)	6.5 in. (16.5 cm)	6.5 in. (16.5 cm)	7.1 in (18.0 cm)	6.5 in. (16.5 cm)	7.1 in (18.0 cm)
Weight (dry)	4.5 lb (2.0 kg)	5.5 lb (2.5 kg)	6.5 lb (3.0 kg)	6.5 lb (3.0 kg)	6.7 lb (3.03 kg)	6.7 lb (3.03 kg)
Clean Pressure Drop	0.7 PSI (4.8 kPa)	0.7 PSI (4.8 kPa)	0.7 PSI (4.8 kPa)	0.7 PSI (4.8 kPa)	0.7 PSI (4.8 kPa)	0.7 PSI (4.8 kPa)
Ambient Temp. Range	-40° to +250°F (-40° to +121°C)					
Max. Fuel Temp.	190°F (32°C)					

Note: All Racor filter materials and seals are compatible with ultra-low sulphur diesel (ULSD) fuel and B2 to B20 Biodiesel.

700 Series

12 Volt Replacement Parts

	Parts	Description
1.	**RK22895**	Replacement Pump Head with Pump
2.	**RK22933**	**12 vdc** Primer Pump Kit (Includes pump, o-rings, screws, prescreen element and more. Does NOT include mounting head.)
3.	**RK22902**	Wire Harness Kit
4.	**RK22943**	Control Panel Kit
5.	**RK 22798**	Bypass Valve Kit
6.	**RK 21501**	Gasket Kit (Includes #'s 6 and 8)

7. (see below) Replacement Elements

Model	2 Micron	10 Micron	30 Micron
745R	**R45S**	**R45T**	**R45P**
760R	**R60S**	**R60T**	**R60P**
790R	**R90S**	**R90T**	**R90P**
7125R	**R125S**	**R125T**	**R125P**

8.	**RK 21501**	Gasket Kit (Includes #'s 6 and 8)
9.	**RK 21113-13-11**	Clear Bowl Kit (Includes #'s 8 and 10)
10.	**RK 30476**	Self-venting Drain Kit
11.	**RK 30902**	Water Sensor Probe Kit

Additional Parts (not shown)

RK11-1970	Port Plug Kit
RK22934	Prescreen Element Kit (100 micron)

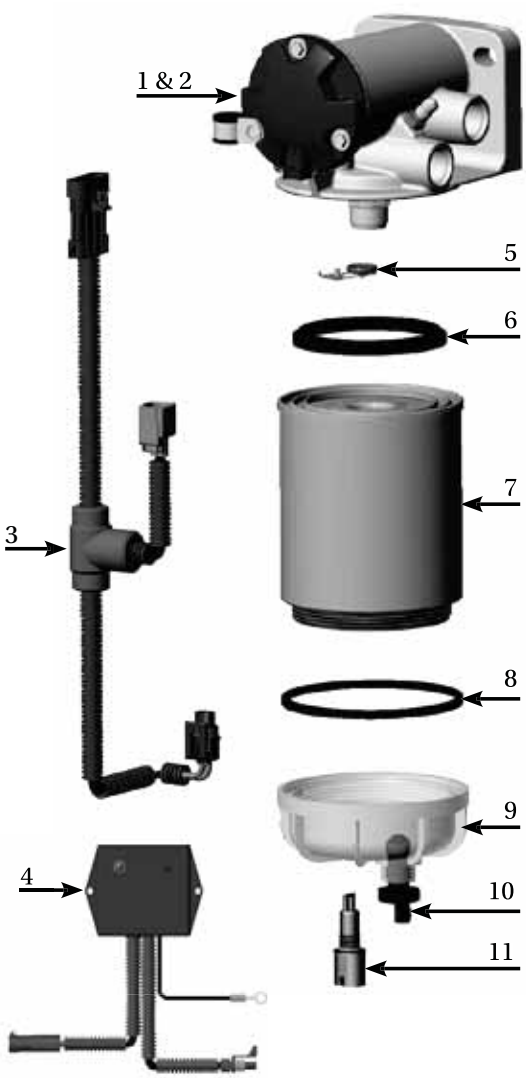

Questions? Contact Technical Support:
800 344 3286 or 209 521 7860 ext. 7555
e-mail: racortech@parker.com

700 Series

24 Volt Replacement Parts

	Parts	Description
1.	**RK23085**	Replacement Pump Head with Pump
2.	**RK23087**	**24 vdc** Primer Pump Kit (Includes pump, o-rings, screws, prescreen element and more. Does NOT include mounting head.)
3.	**RK23088**	Push Button/Harness Kit
4.	**RK 22798**	Bypass Valve Kit
5.	**RK 21501**	Gasket Kit (Includes #'s 5 and 7)

6. (see below) Replacement Elements

Model	2 Micron	10 Micron	30 Micron
790R	**R90S**	**R90T**	**R90P**
7125R	**R125S**	**R125T**	**R125P**

7.	**RK 21501**	Gasket Kit (Includes #'s 5 and 7)
8.	**RK 21113-13-11**	Clear Bowl Kit (Includes #'s 7 and 9)
9.	**RK 30476**	Self-venting Drain Kit
10.	**RK 30964**	Water Sensor Probe Kit/Connector

Additional Parts (not shown)

RK11-1970	Port Plug Kit
RK22934	Prescreen Element Kit (100 micron)

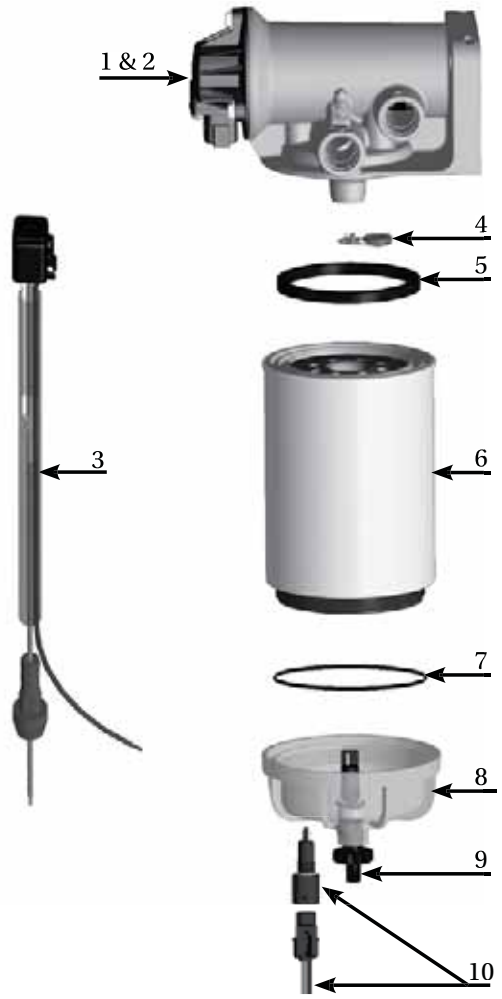

700 Series

Mounting

Keep all fuel lines and flow restrictions to a minimum. Use maximum size fuel hose possible. Do not use two 45° fittings where one 90° elbow will work.

Avoid sharp bends, surfaces that move, sharp edges, or hot areas such as exhaust piping.

Use 3/8″ mounting hardware.

Mount filter vertically on suction (vacuum) side of fuel transfer pump (or injection pump).

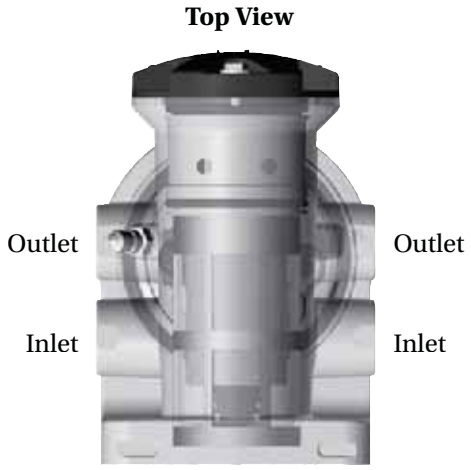

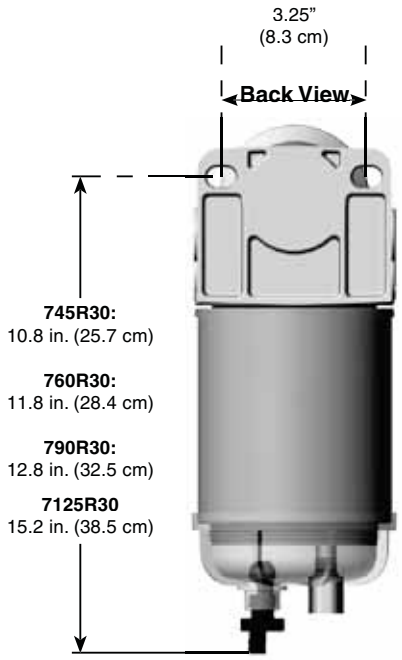

Installation Diagram

Fuel Tank Above Filter
(Head pressure should not exceed max. PSI of filter.)

Fuel Tank
(Pressure Side Installation)

Install shut-off valve when fuel tank is higher than filter.

Fuel Tank
(Ideal Vacuum Side Installation)

To maintain prime, install check valve (with light or no restriction when tank is lower than filter.

Fuel Tank
(Vacuum Side Installation)

Fuel Tank Below Filter
(Lift should not exceed 4 inHg.)

Optional Bypass Installation and Operation (Allows user to service filter without shutting down engine.)			
Valves	1	2	3
Unit On-line	Open	Open	Closed
Unit Off-line	Closed	Closed	Open

Optional Fuel Transfer Pump
Do not exceed maximum PSI or flow rate of filter. Not ideal— pumps emulsify water hindering filter performance.

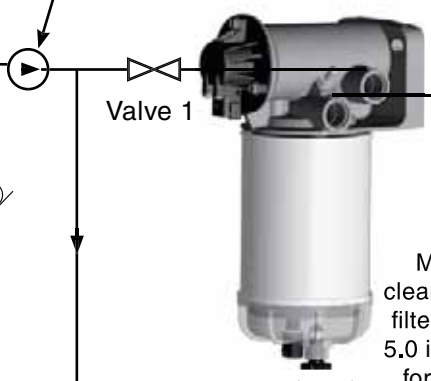

Questions? Contact Technical Support:
800 344 3286 or 209 521 7860 ext. 7555
e-mail: racortech@parker.com

700 Series

Optional Accessories

RK22943
Replacement Control Panel
12 volt System

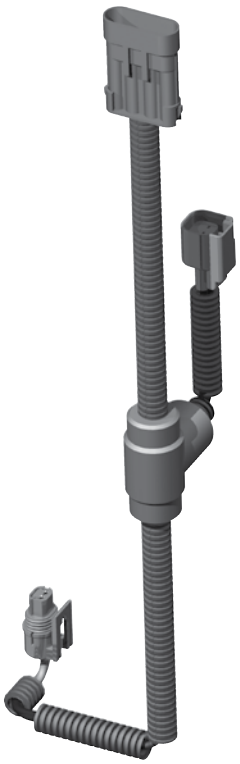

RK22902
Replacement Wire Harness
12 volt System

RK 30964
Replacement WIF Sensor Kit
24 volt System Includes Detachable
2-wire Connector. Requires a Detection
Module.

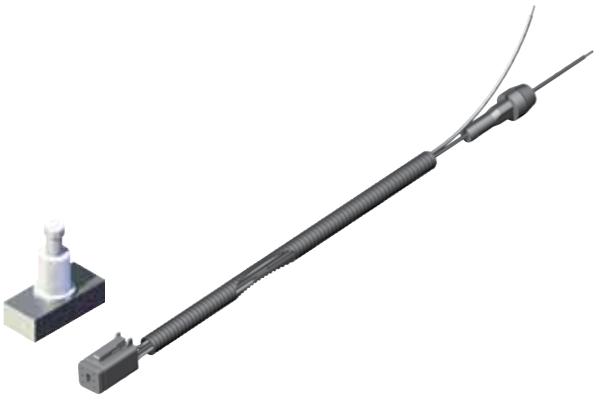

RK23088
Replacement Push Button and Harness Kit
24 volt System

Primer Pump Kit

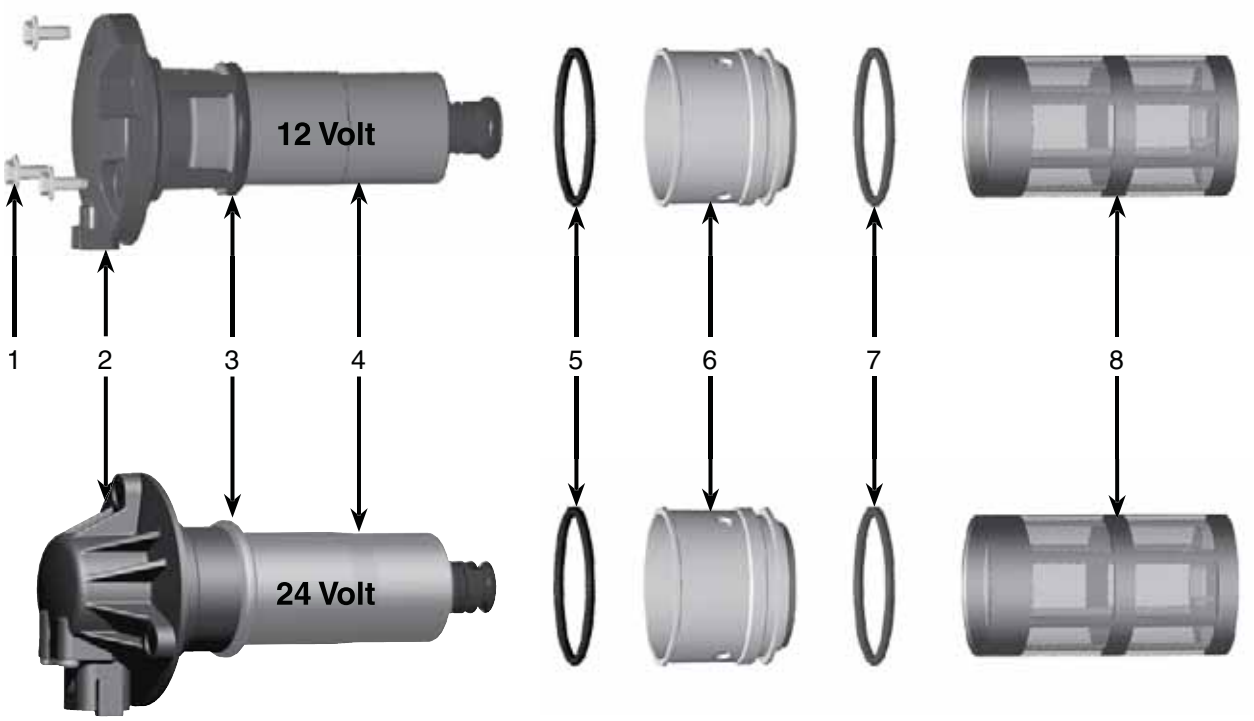

Replacement Parts

RK22933 12 vdc Primer Pump Kit includes all parts shown above.

	Part Number	Description
1.	**N/A**	Screws (3)
2.	**N/A**	Pump Cover
3.	**N/A**	Body O-ring
4.	**N/A**	Pump Sub Assembly
5.	**N/A**	Cover O-ring
6.	**N/A**	Pump Seal Adapter
7.	**N/A**	Adapter O-ring
8.	**N/A**	Prescreen 100 micron
	RK22934	Prescreen Element Kit 100 micron (includes numbers 3, 5, 7 & 8)

RK23087 24 vdc Primer Pump Kit includes all parts shown above.

	Part Number	Description
1.	**N/A**	Screws (3)
2.	**N/A**	Pump Cover
3.	**N/A**	Body O-ring
4.	**N/A**	Pump Sub Assembly
5.	**N/A**	Cover O-ring
6.	**N/A**	Pump Seal Adapter
7.	**N/A**	Adapter O-ring
8.	**N/A**	Prescreen 100 micron
	RK22934	Prescreen Element Kit 100 micron (includes numbers 3, 5, 7 & 8)

Questions? Contact Technical Support:
800 344 3286 or 209 521 7860 ext. 7555
e-mail: racortech@parker.com

777R Series

Fuel Heater/Water Separator

The 777R assembly is a complete fuel filtration system that removes contaminants from fuel using the following two stage process:

Stage 1: **As fuel enters the assembly, it moves through the centrifuge and spins off large solids and water droplets, which are heavier than fuel, and fall to the bottom of the collection bowl.**

Stage 2: **Proprietary Aquabloc® II cartridge elements repel water and remove contaminates from fuel down to 2 micron. They are waterproof and effective longer than water absorbing elements.**

Note: All Racor filter materials and seals are compatible with ultra-low sulphur diesel (ULSD) fuel and B2 to B20 Biodiesel.

Specifications	
Maximum Flow Rate: (with diesel)	150 GPH (568 LPH)
Inlet/Outlet Port Size	½" NPT
Housing Material	Aluminum
Replacement Element	See Element Chart
Micron Rating	30
Minimum Service Clearance (above filter) (below filter)	6.0 in. (15.2 cm) 2.0 in. (5.1 cm)
Height	18.8 in. (47.8 cm)
Depth	6.8 in. (17.3 cm)
Width	8.1 in. (20.6 cm)
Weight (dry)	12.0 lb (5.4 kg)
Maximum Working Pressure[1]	30 PSI (2.1 bar)
Water Removal Efficiency	99%
Clean Pressure Drop	0.7 PSI (4.8 kPa)
Case Quantity	6
Ambient Temperature Range	-40° to +250°F (-40° to +121°C)
Maximum Fuel Temperature	190°F (32°C)

Notes: [1]Vacuum side installations only.

Questions? Contact Technical Support:
800 344 3286 or 209 521 7860 ext. 7555
e-mail: racortech@parker.com

Parker Racor

777R Series

777R1230FH

Fuel Heater/Water Separator

777R1202FH, 777R1210FH & 777R1230FH assemblies are shipped with no fluid heat port plugs. Coolant lines are plumbed directly to the fluid heat ports.

Stage 1: **As fuel enters the assembly, it moves through the centrifuge and spins off large solids and water droplets, which are heavier than fuel, and fall to the bottom of the collection bowl.**

Stage 2: **Proprietary Aquabloc® II cartridge elements repel water and remove contaminates from fuel down to 2 micron. They are waterproof and effective longer than water absorbing elements.**

Note: All Racor filter materials and seals are compatible with ultra-low sulphur diesel (ULSD) fuel and B2 to B20 Biodiesel.

Specifications	
Maximum Flow Rate: (with diesel)	150 GPH (568 LPH)
Inlet/Outlet Port Size	½" NPT
Housing Material	Aluminum
Replacement Element	See Element Chart
Micron Rating	30
Minimum Service Clearance (above filter) (below filter)	6.0 in. (15.2 cm) 2.0 in. (5.1 cm)
Height	18.8 in. (47.8 cm)
Depth	6.8 in. (17.3 cm)
Width	8.1 in. (20.6 cm)
Weight (dry)	12.0 lb (5.4 kg)
Maximum Working Pressure[1]	30 PSI (2.1 bar)
Water Removal Efficiency	99%
Clean Pressure Drop	0.7 PSI (4.8 kPa)
Case Quantity	6
Ambient Temperature Range	-40° to +250°F (-40° to +121°C)
Maximum Fuel Temperature	190°F (32°C)

Notes: [1]Vacuum side installations only.

Questions? Contact Technical Support:
800 344 3286 or 209 521 7860 ext. 7555
e-mail: racortech@parker.com

777R Series

How to Order

(The example below illustrates how part numbers are constructed.)

7 7 7 R 1 2 0 2 F H

Basic Model Number

12 must be in part number for 12 vdc heater (omit if not desired)

Specify:
02 for 2 micron
10 for 10 micron
30 for 30 micron

Specify:
FH Fluid heat port plugs not installed (omit if not desired)

Replacement Elements		
2 micron (Final Filtration)	10 micron (Secondary Filtration)	30 micron (Primary Filtration)
6732S	**6732T**	**6732P**

Note: Maintain 6 in. (15.2 cm) overhead clearance for servicing.

777R assemblies feature an internal thermostat to protect electric engine controls from overheating by the fuel heater and regulates fuel temperature automatically; warm fuel in the winter, cool fuel in the summer (thermostat setting: on at 40°F (4°C), off at 61°F (16°C). This filter also offers temperature controlled fuel heating with return fuel or engine coolant; thermostat valve open to 95°F (35°C). Other features include a fuel primer port on top of the assembly, a internal check valve that guards against loss of prime, a heavy duty integrated mounting bracket that is part of its one-piece billet machined body, a clear bottom bowl that allows the operator to check for water and solid contamination at a glance, and a self-venting drain. Optional accessories include a vacuum gauge and a water detection system.

Test Data

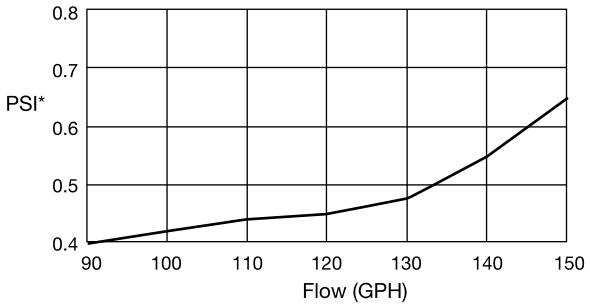

Fuel Flow Restriction

* PSI X 2.036 = inHg. / PSI X 6.895 = kPa

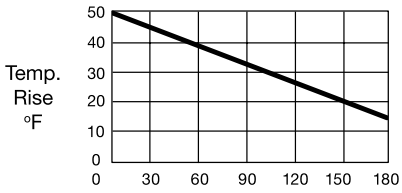

Heat Rise vs Flow
(Fuel = -10° F)
(Coolant = +185° F @ 5 gpm)

777R Series

777R Series Overview

Specifications	777R1230	777R1230FH[2]
Maximum Flow Rate: (with diesel)	150 GPH (568 LPH)	150 GPH (568 LPH)
Inlet/Outlet Port Size	½" NPT	½" NPT
Housing Material	Aluminum	Aluminum
Replacement Element	See Element Chart	See Element Chart
Micron Rating	30	30
Minimum Service Clearance (above filter) (below filter)	6.0 in. (15.2 cm) 2.0 in. (5.1 cm)	6.0 in. (15.2 cm) 2.0 in. (5.1 cm)
Height	18.8 in. (47.8 cm)	18.8 in. (47.8 cm)
Depth	6.8 in. (17.3 cm)	6.8 in. (17.3 cm)
Width	8.1 in. (20.6 cm)	8.1 in. (20.6 cm)
Weight (dry)	12.0 lb (5.4 kg)	12.0 lb (5.4 kg)
Maximum Working Pressure[1]	30 PSI (2.1 bar)	30 PSI (2.1 bar)
Water Removal Efficiency	99%	99%
Clean Pressure Drop	0.7 PSI (4.8 kPa)	0.7 PSI (4.8 kPa)
Case Quantity	6	6
Ambient Temperature Range	-40° to +250°F (-40° to +121°C)	-40° to +250°F (-40° to +121°C)
Maximum Fuel Temperature	190°F (32°C)	190°F (32°C)

Notes: [1]Vacuum side installations only.
[2]Fluid heat port plugs not installed.

Questions? Contact Technical Support:
800 344 3286 or 209 521 7860 ext. 7555
e-mail: racortech@parker.com

777R Series

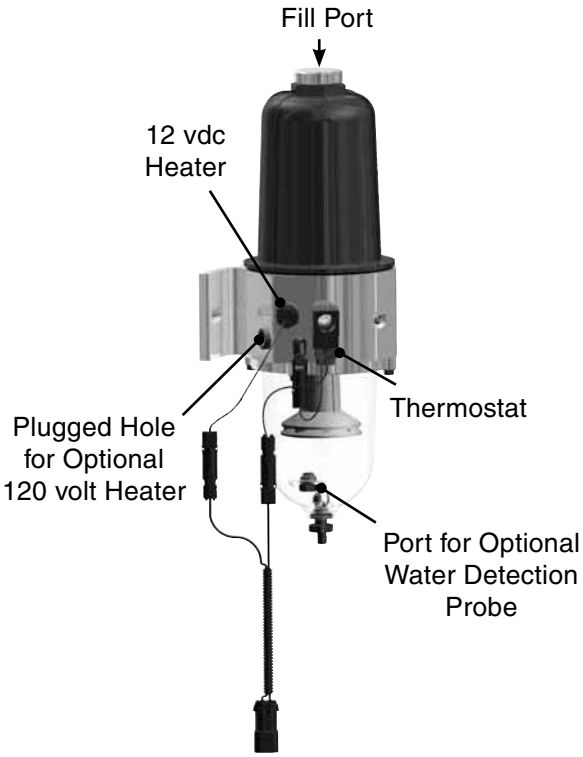

Left Side View

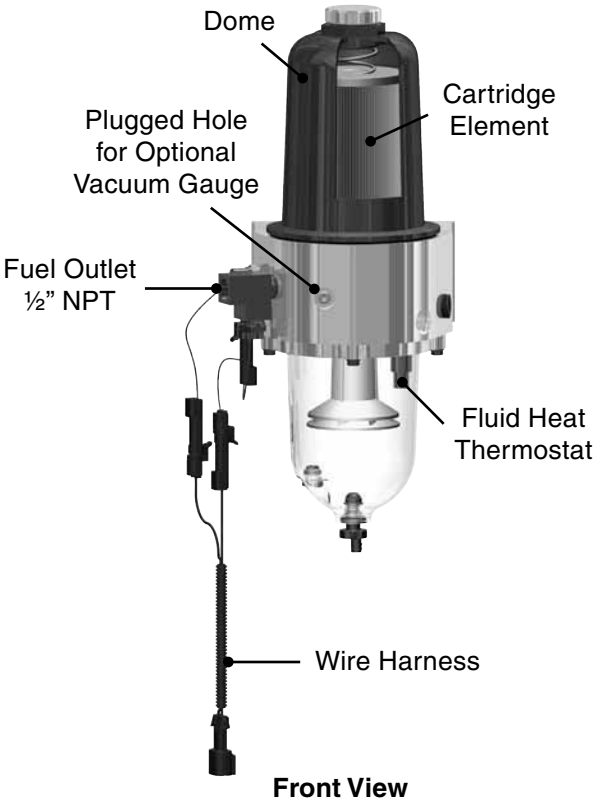

Front View

Mounting Information

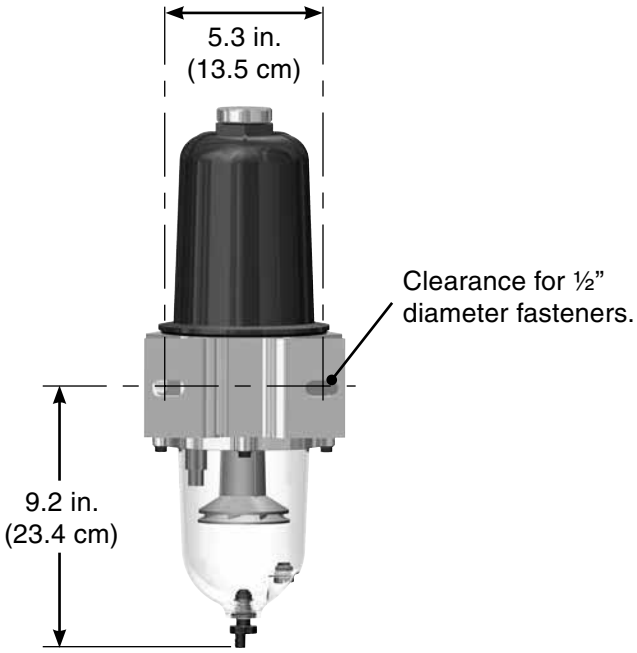

Back View

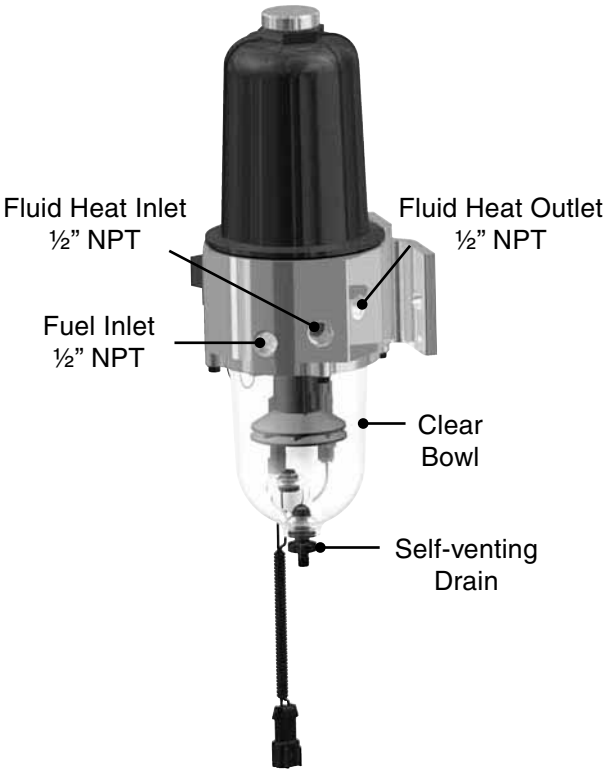

Right Side View

Questions? Contact Technical Support:
800 344 3286 or 209 521 7860 ext. 7555
e-mail: racortech@parker.com

Parker Racor

777R Series

Replacement Parts

	Part Number	Description
1.	**6707**	Priming Plug Kit (includes o-ring)
2.	**RK23007**	Top Dome Kit (includes #'s 1 to 4)
3.	**6706P**	Dome Gasket (kit includes 3 gaskets)
4.	**RK6733**	Element Spring
5.	Replacement Element	
	6732S	2 Micron
	6732T	10 Micron
	6732P	30 Micron
6.	**N/A**	Machined Billet Body
7.	**RK012T-8-8**	Tee Fitting
8.	**RK23017**	Heater Assembly Kit (12 vdc, 180 watt)
9.	**RK23018**	Thermostat Assembly Kit (12 vdc)
10.	**RK23046**	Check Valve Kit (includes checkball and checkball gasket)
11.	**RK23019**	Heater Wire Harness (12 vdc)
12.	**RK 20126**	Sensor Plug Kit (½" SAE)
13.	**RK23080**	Bowl Retaining Ring Kit
14.	**RK 11542**	Capscrew Kit (4 capscrews)
15.	**RK 30476**	Self Venting Drain Kit
16.	**RK 11-1938**	Bottom Bowl Kit (includes #'s 12, 15, &17)
17.	**11007**	Bowl Seal Kit
18.	**N/A**	Turbine Centrifuge Kit
19.	**RKSV700A**	Thermostat Kit
20.	**RKVFG80**	Vacuum Gauge Kit
	Additional Parts (not shown)	
	RK23045	Optional 120 volt Heater Kit
	RK 32204	Optional Water Sensor Kit
	23013	Installation Instructions

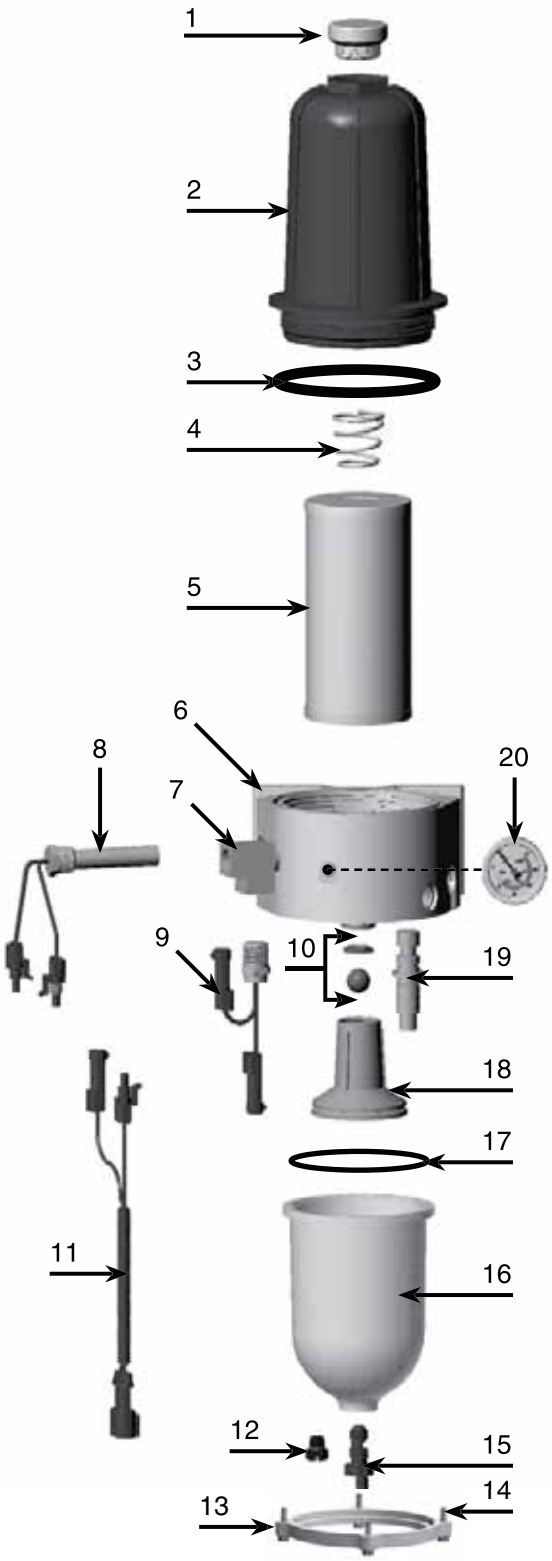

Questions? Contact Technical Support:
800 344 3286 or 209 521 7860 ext. 7555
e-mail: racortech@parker.com

RK12963

Retrofit Kit/Filtration System

The RK12963 is a one-time retrofit kit for 90S1230C Integrated assemblies which incorporates a high quality water probe (with connectors), an indestructible metal bowl and a high-capacity 30 micron element. Once the retrofit from a 200200 element is complete, customers would then purchase the S3230P replacement element for their next service.

Note: All Racor filter materials and seals are compatible with ultra-low sulphur diesel (ULSD) fuel and B2 to B20 Biodiesel.

Specifications	
Maximum Flow Rate: **(with diesel)**	
Inlet/Outlet Port Size	
Housing Material	
Replacement Element	
Micron Rating	
Minimum Service Clearance **(above filter)** **(below filter)**	
Height	
Depth	
Width	
Weight (dry)	
Maximum Working Pressure[1]	
Water Removal Efficiency	
Clean Pressure Drop	
Case Quantity	
Ambient Temperature Range	-40° to +250°F (-40° to +121°C)
Maximum Fuel Temperature	190°F (32°C)

Notes: [1]Vacuum side installations only.

Questions? Contact Technical Support:
800 344 3286 or 209 521 7860 ext. 7555
e-mail: racortech@parker.com

Parker Racor

RK12963

RK12963 Retrofit Kit Overview

The 90S1230C Integrated assemblies are two-stage filtration and repriming systems featuring a solid-state controlled electronic priming pump, electronic air purge, a cleanable pre-filter with a stainless steel element and a fuel filter/water separator. These complete fuel management systems isolate contaminants present in diesel fuel and trap them prior to reaching the fuel injection system, protecting the engine's fuel system from costly and premature failure.

Pictured below are some of the components included with this kit. Detailed teardown and rebuild instructions are also included.

	Part Number	Description
1.	**0102-6-2**	Bushing
2.	**30899**	Water Sensor
3.	**30745**	Metal Bowl
(sold separately)		
4.	**S3230P**	Replacement Element
5.	**300200**	Prescreen 200 micron (includes 0-rings)

Before

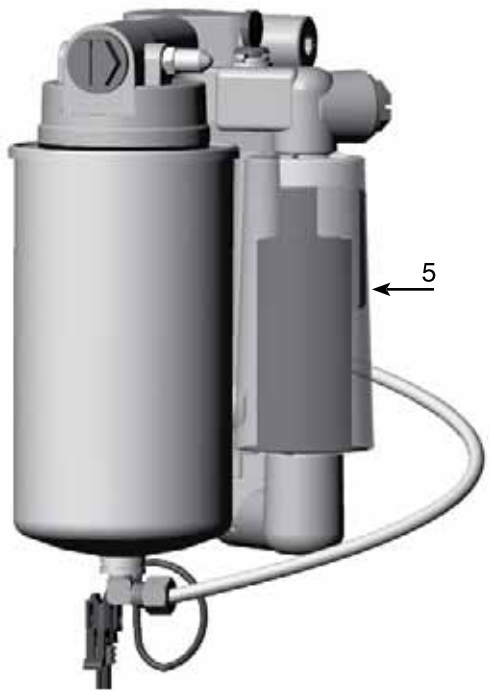

Integrated Assembly

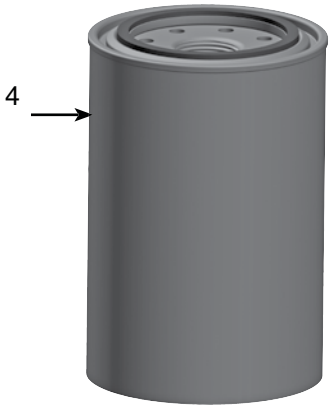

S3230P Filter sold separately

After

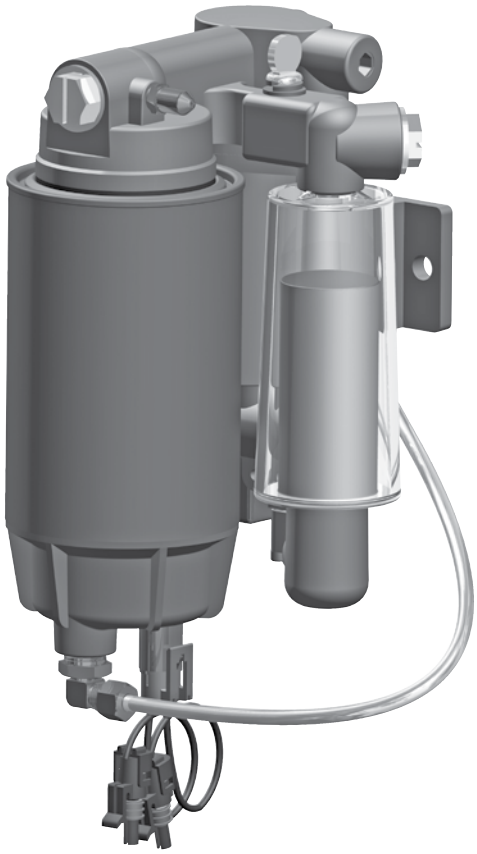

Integrated Assembly

Questions? Contact Technical Support:
800 344 3286 or 209 521 7860 ext. 7555
e-mail: racortech@parker.com

790R30 Integrated

790R30

The 790R30 Integrated fuel filter/ water separator assembly is a two-stage filtration and repriming system featuring a solid-state controlled electronic priming pump, a vent valve to purge air, a 200 micron prefilter screen, a 30 micron Aquabloc®II Spin-On element, a water sensor probe, a metal collection bowl and a weather proof control box. This complete fuel management system isolates contaminants present in diesel fuels and traps them prior to reaching the fuel injection system, protecting the engine's fuel system from costly and premature failure.

Specifications	790R30
Maximum Flow Rate	60 GPH (227 LPH)
Fuel Port Size SAE J1926	7/8"-14 NPT
Replacement Element	S3230P
Micron Rating	30 micron
Height	12.3 in. (31.2 cm)
Width	4.3 in. (11.0 cm)
Depth	6.5 in. (16.5 cm)
Weight (dry)	6.5 lb (3.0 kg)
Clean Pressure Drop	0.25 PSI (1.7 kPa)
H_2O Removal Efficiency	99%
Operating Temperature	-40° to +225°F (-40° to +107°C)

Primer Pump Kit

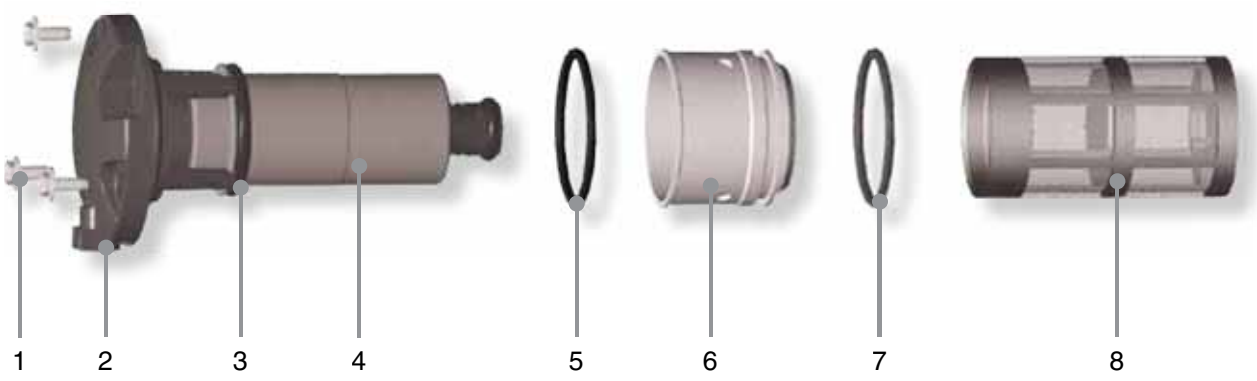

Replacement Parts

RK22933 Primer Pump Kit includes all parts shown above.

	Part Number	Description
1.	**N/A**	Screws (3)
2.	**N/A**	Pump Cover
3.	**N/A**	Body O-ring
4.	**N/A**	Pump Sub Assembly
5.	**N/A**	Cover O-ring
6.	**N/A**	Pump Seal Adapter
7.	**N/A**	Adapter O-ring
8.	**RK22934**	Prescreen Element Kit 200 micron (includes numbers 5, 7 & 8)

Questions? Contact Technical Support:
800 344 3286 or 209 521 7860 ext. 7555
e-mail: racortech@parker.com

Primer Pump Kit

Installation Instructions

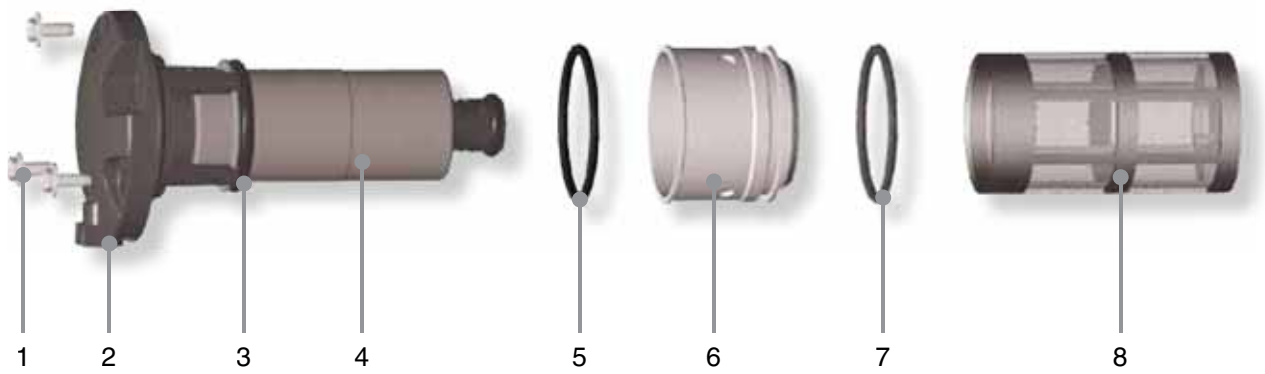

Please read ALL instructions before beginning installation. See installation diagram on next page for reference and additional information.

Maintain a safe working environment. Obtain good ventilation and do not smoke or allow open flame near the installation.

The engine must be off and cool to touch before beginning installation.

This filter assembly will replace stand-alone primary fuel filters that may be installed on the engine. Remove existing primary filter, if applicable, and dispose of properly.

Apply thread sealant to fittings, lubricant to o-rings and install fittings into the appropriate inlet and outlet ports. Tighten snugly. Install port plugs in unused ports and tighten snugly.

Connect fuel hose to the inlet/outlet fittings and use hose clamps where appropriate.

Notes:
Completely drain assembly. Tear-down is performed in numerical order shown above (1-8). Rebuild assembly in reverse order (8-1), substituting new parts for old. On rebuild, lubricate all O-rings with motor oil or clean diesel fuel and tighten screws to 50 in. lbs (maximum).

Important: Insure inside face of cover is flush with pump body and all flat surfaces are clean (free of scratches and debris).

Prescreen element can be cleaned and inspected before replacement.

Clean in solvent bath with a soft brush. Flush with diesel fuel. Gently blow dry with air, if necessary.

Prime the system and check for leaks. Correct as necessary with engine off.

Primer Pump Kit

Repriming, Draining Element Replacement

Operation For Repriming Unit:

(for initial installation, repriming, or to restart after running out of fuel).

1. **Turn ignition to ON position; do not start engine.**
2. **Remove cap from vent valve. Press and hold PRIME button on control panel; this will activate primer pump and yellow 'prime' LED will illuminate.**
3. **Press and hold vent valve open to release excess air from filter. Release vent valve at first indication of fuel. Warning! If vent valve is kept open too long, a pressurized stream of fuel will exit creating a potentially hazardous situation. Continue to hold PRIME button for about 30 seconds (or until unit is primed) and release.**
4. **Start engine and run at high idle for about three minutes. Note: The engine may run rough while remaining air is forced through the fuel system.**

Service Draining Water:

Frequency of water draining or element replacement is determined by the contamination level of the fuel. Drain bowl frequently if contaminated fuel is suspected or when remote water-in-fuel lamp illuminates.

Element Replacement:

Replace element every 10,000 miles, 500 hours, every other oil change, if power loss is noticed, or annually, whichever occurs first. Note: Always carry extra replacement elements as one tankful of excessively dirty fuel can plug a filter. To replace element:

1. **Disconnect water sensor connector and drain any water from the see-thru bowl.**
2. **With a collection pan in place, remove element and bowl assembly from mounting head.**
3. **Remove see-thru bowl from element and dispose of element properly. Bowl is reusable.**
4. **Lubricate gasket on new element with motor oil or diesel fuel and spin new element (without bowl) onto mounting head. Hand tighten only.**
5. **Clean bowl of debris. Lubricate new bowl O-ring, place in gland of bowl and spin bowl onto new element. Hand tighten only.**
6. **Reattach water sensor connector.**
7. **Open fuel tank outlet valve, if applicable, and follow Operation instructions to reprime system.**

Questions? Contact Technical Support:
800 344 3286 or 209 521 7860 ext. 7555
e-mail: racortech@parker.com

790R30 Integrated

Installation Diagram

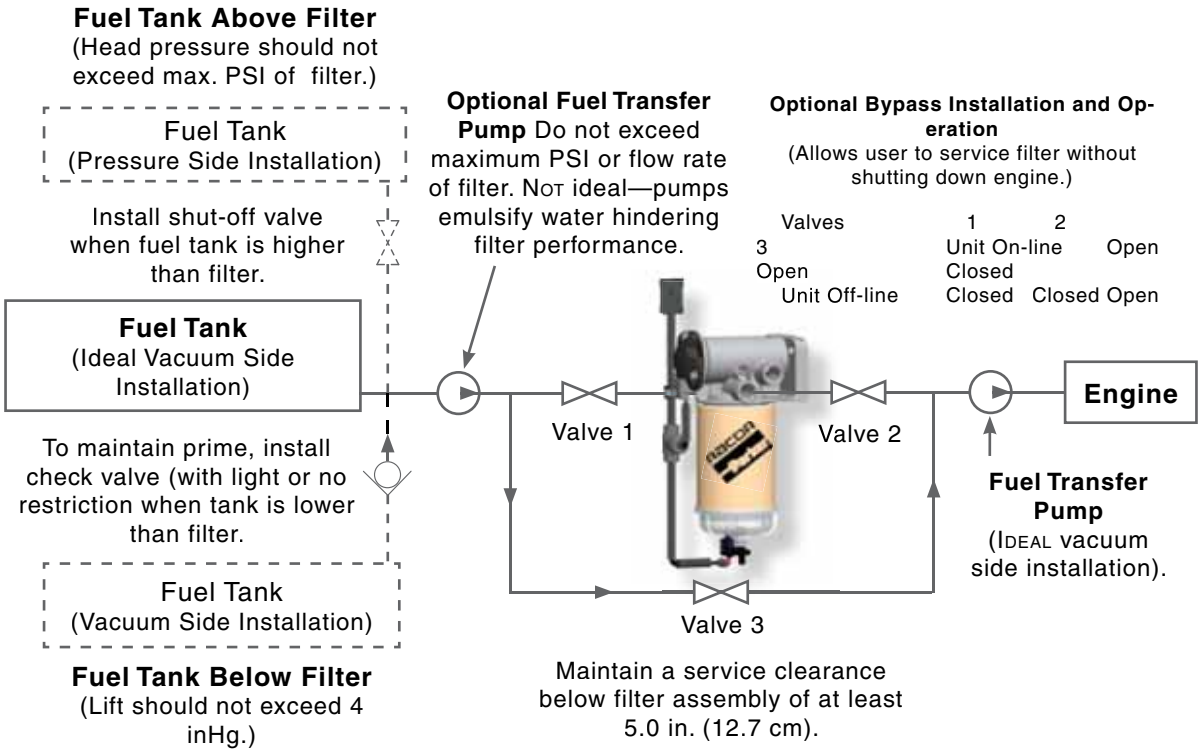

790R30 Integrated

Installing the Control Panel

1. **Monaco Connector:**
   (cut off if installing on any other application).
2. **Green Wire:**
   To remote warning light or cap off.
3. **Red Wire:**
   To 7.5 amp fuse, then to +12 volt dc power.
4. **Black Wire:**
   To ground.
5. **To Filter Connector.**

Install control panel in engine compartment. Mount control panel on a solid surface and in an area that is visible and easily accessible.

Use control box as a template to mark locations for mounting holes. Drill Two (3/16 in.) holes and mount control box.

Route the filter wiring harness to control panel and attach connectors; push firmly until safty lock engages.

Use wire ties to secure wiring. Connect black wire to ground. Connect red wire through a 7.5 amp in-line fuse to a constant 12 volt dc power source. Connect green wire to an optional remote warning light, if equipted, or cap off.

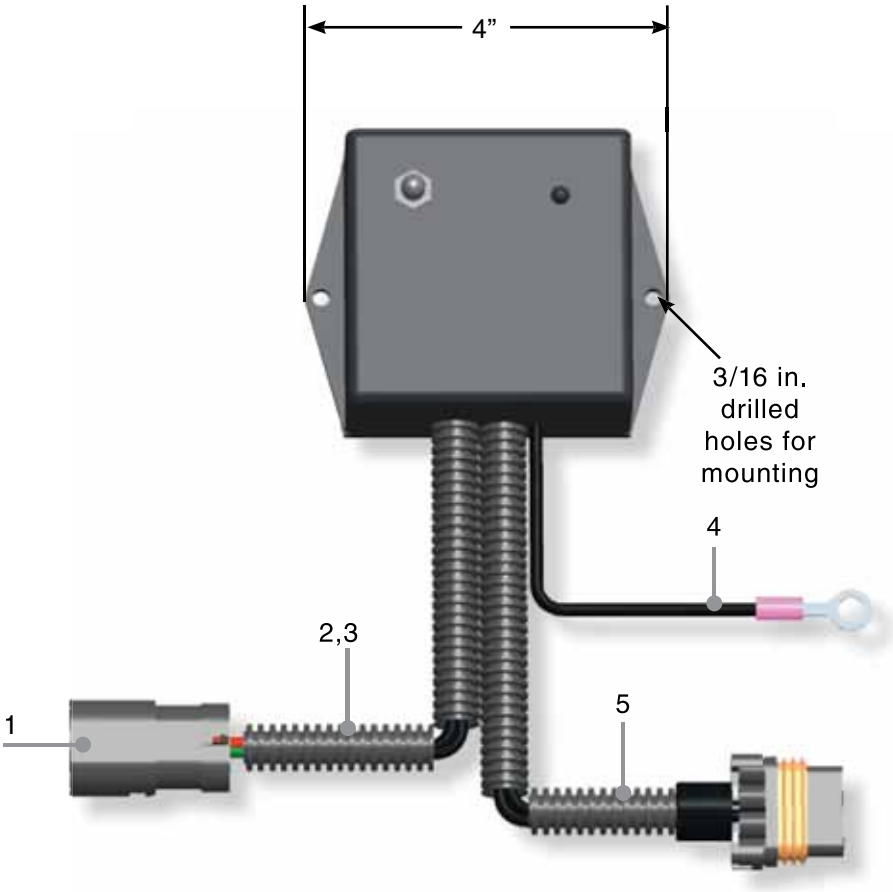

790R30 Integrated

Mounting & Port Information

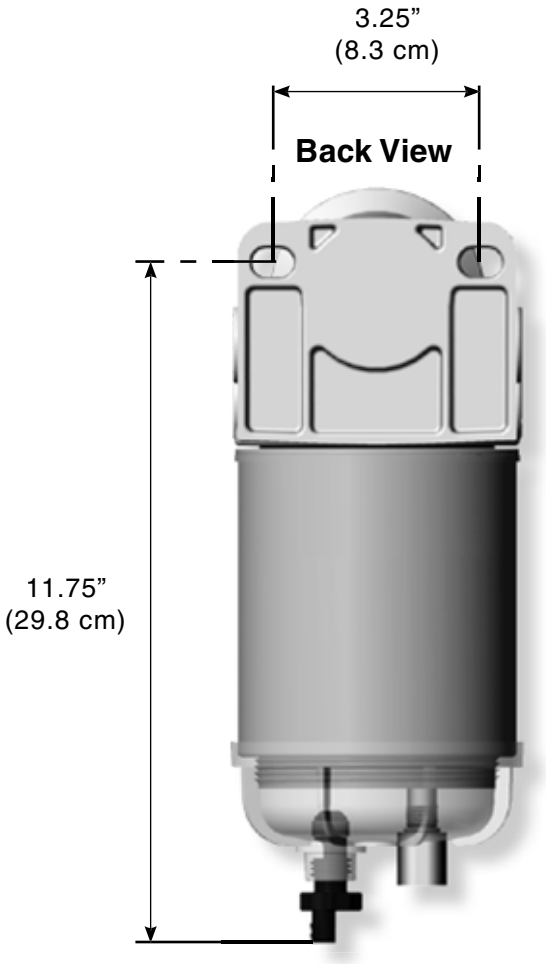

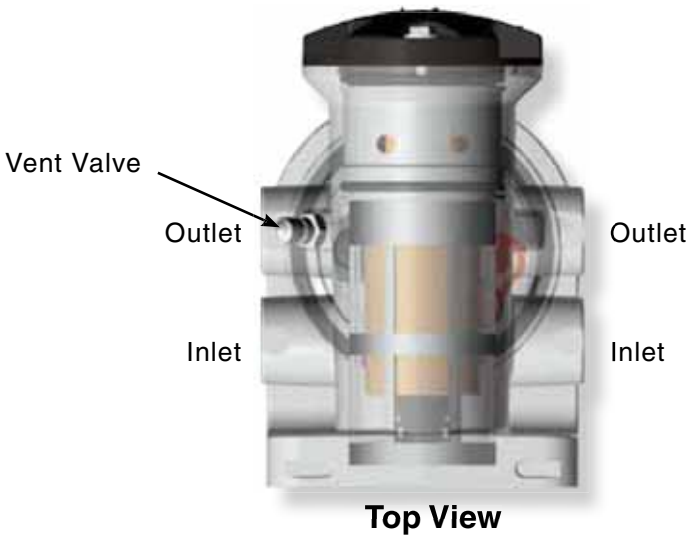

Dual Spin-On Series

75/B32009

Dual Filter/Water Separator

The Racor Dual Spin-On Series provides twice the filtering capacity in one compact and robust package. A shut-off valve located in the mounting head can switch to the clean filter so that the dirty filter may be serviced (servicing filters is not possible while engine is running).

These assemblies feature Aquabloc® II replaceable filter elements that stop water, remove solid contamination, and are available in 2, 10 and 30 micron. Filtration needs should be based on application, fuel quality, operating climates, and maintenance schedules.

Note: All Racor filter materials and seals are compatible with ultra-low sulphur diesel (ULSD) fuel and B2 to B20 Biodiesel.

Specifications	
Maximum Flow Rate: **(one filter on-line)** **(two filters online)**	 60 GPH (227 LPH) 120 GPH (454 LPH)
Inlet/Outlet Port Size	7/8”-14
Housing Material	Aluminum
Replacement Element	See Element Chart
Center Threads (UNF JIC)[1]	16mm X 1.5
Minimum Service Clearance (below filter)	2.0 in. (5.1 cm)
Height	12.4 in. (31.5 cm)
Depth	5.3 in. (13.5 cm)
Width	8.4 in. (21.3 cm)
Weight (dry)	-
Maximum Working Pressure[2]	30 PSI (2.1 bar)
Water Removal Efficiency	99%
Solids Capacity **(with one filter)** **(with two filters)**	 13.7 oz. (388 g) 27.4 oz. (777 g)
Case Quantity	6
Ambient Temperature Range	-40° to +250°F (-40° to +121°C)
Maximum Fuel Temperature	190°F (32°C)

Notes: [1]Units are standard with M18 X 1.5 (ISO9974-1) O-ring face seal fuel ports. 75/B32009 includes two adapter fittings to 7/8”-14 UNF JIC.
[2]Vacuum side installations only.

Questions? Contact Technical Support:
800 344 3286 or 209 521 7860 ext. 7555
e-mail: racortech@parker.com

Dual Spin-On Series

75/B32016

Dual Filter/Water Separator

The Racor Dual Spin-On Series provides twice the filtering capacity in one compact and robust package. A shut-off valve located in the mounting head can switch to the clean filter so that the dirty filter may be serviced (servicing filters is not possible while engine is running).

These assemblies feature Aquabloc® II replaceable filter elements that stop water, remove solid contamination, and are available in 2, 10 and 30 micron. Filtration needs should be based on application, fuel quality, operating climates, and maintenance schedules.

Note: All Racor filter materials and seals are compatible with ultra-low sulphur diesel (ULSD) fuel and B2 to B20 Biodiesel.

Specifications	
Maximum Flow Rate: **(one filter on-line)** **(two filters online)**	 20 GPH (75 LPH) 40 GPH (151 LPH)
Inlet/Outlet Port Size	3/4”-16
Housing Material	Aluminum
Replacement Element	See Element Chart
Center Threads[1]	16mm X 1.5
Minimum Service Clearance (below filter)	2.0 in. (5.1 cm)
Height	10.3 in. (26.2 cm)
Depth	4.9 in. (12.4 cm)
Width	7.6 in. (19.3 cm)
Weight (dry)	-
Maximum Working Pressure[2]	30 PSI (2.1 bar)
Water Removal Efficiency	99%
Solids Capacity **(with one filter)** **(with two filters)**	 6.4 oz. (182 g) 12.8 oz. (363 g)
Case Quantity	6
Ambient Temperature Range	-40° to +250°F (-40° to +121°C)
Maximum Fuel Temperature	190°F (32°C)

Notes: [1] Units are standard M18 X 1.5 (ISO9974-1) O-ring face seal fuel ports. The 75/B32016 includes two adapter fittings to 3/4”-16 UNF JIC
[2] Vacuum side installations only.

Questions? Contact Technical Support:
800 344 3286 or 209 521 7860 ext. 7555
e-mail: racortech@parker.com

Parker Racor

Dual Spin-On Series

How to Order

75/B32009M-10

Select an assembly by flow rate:
75/B32016: 40 GPH (151 LPH)
75/B32009: 120 GPH (454 LPH)

Specify M for a metal bowl:
Use metal bowls on gasoline applications.
(omit if not desired)

Specify a micron rating:
-2 for 2 micron,
-10 for 10 micron, or
-30 for 30 micron.

Replacement Elements

Model	2 micron (Final)	10 micron (Secondary)	30 micron* (Primary)
75/B32016	S3216S	S3216T	S3216P
75/B32009	S3209S	S3209T	S3209P

* A secondary/final filter is required downstream.

Mounting Information

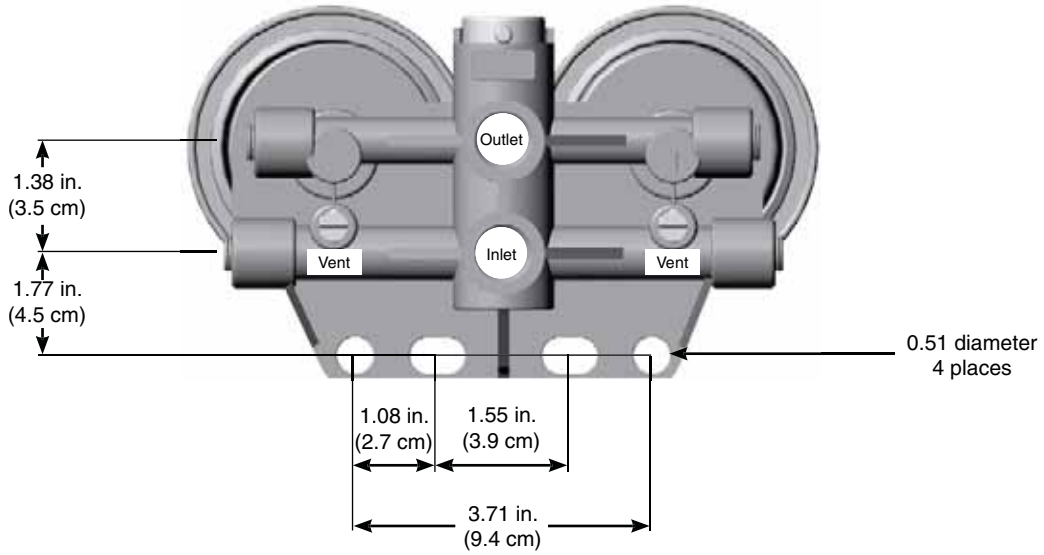

Questions? Contact Technical Support:
800 344 3286 or 209 521 7860 ext. 7555
e-mail: racortech@parker.com

Dual Spin-On Series

Dual Spin-On Series Overview

Specifications	75/B32009	75/B32016
Maximum Flow Rate: **(one filter on-line)** **(two filters online)**	60 GPH (227 LPH) 120 GPH (454 LPH)	20 GPH (75 LPH) 40 GPH (151 LPH)
Port Size (UNF JIC)[1]	7/8”-14	3/4”-16
Height	12.4 in. (31.5 cm)	10.3 in. (26.2 cm)
Width	8.4 in. (21.3 cm)	7.6 in. (19.3 cm)
Depth	5.3 in. (13.5 cm)	4.9 in. (12.4 cm)
Center Threads	16mm X 1.5	16mm X 1.5
Solids Capacity: **(with one filter)** **(with two filters)**	13.7 oz. (388 g) 27.4 oz. (777 g)	6.4 oz. (182 g) 12.8 oz. (363 g)
Available Options: **(water sensor)** **(heater)**	Yes Yes	Yes Yes
Operating Temperature	-40° to +255°F (-40° to +124°C)	

[1] Units are standard with M18 X 1.5 (ISO9974-1) O-ring face seal fuel ports. The 75/B32016 includes two adapter fittings to ¾”-16 UNF JIC and the 75/B32009 includes two adapter fittings to 7/8”-14 UNF JIC.

The Selection Valve

LEFT ON

BOTH ON

RIGHT ON

Do not service filters with engine on.

Dual Spin-On Series

Replacement Parts

75/B32009 and **75/B32016**

	Part Number	Description
1.	**30628**	Dual Filter Head
2.	**RK 10503**	Element Gasket Kit
3.	See Replacement Element Chart	
4.	**RK 30076**	**75/B32009** Bowl O-ring Kit
	RK 10012	**75/B32016** Bowl O-ring Kit
5.	Replacement Bowl Kits (includes bowl, #'s 4 to 7)	
	RK 30051	**75/B32009** Clear Bowl Kit
	RK 30473	**75/B32009** Metal Bowl Kit (no probe port)
	RK 10215	**75/B32016** Clear Bowl Kit
	RK 10109	**75/B32016** Metal Bowl Kit (no probe port)
6.	**RK 30476**	Drain Valve Kit
7.	**RK 20126**	1/2" SAE Plug with O-ring
	Additional Parts (not shown)	
	30837	**75/B32009** Adapter Fitting (7/8"-14 UNF JIC)
	30945	**75/B32016** Adapter Fitting (3/4"-16 UNF JIC)

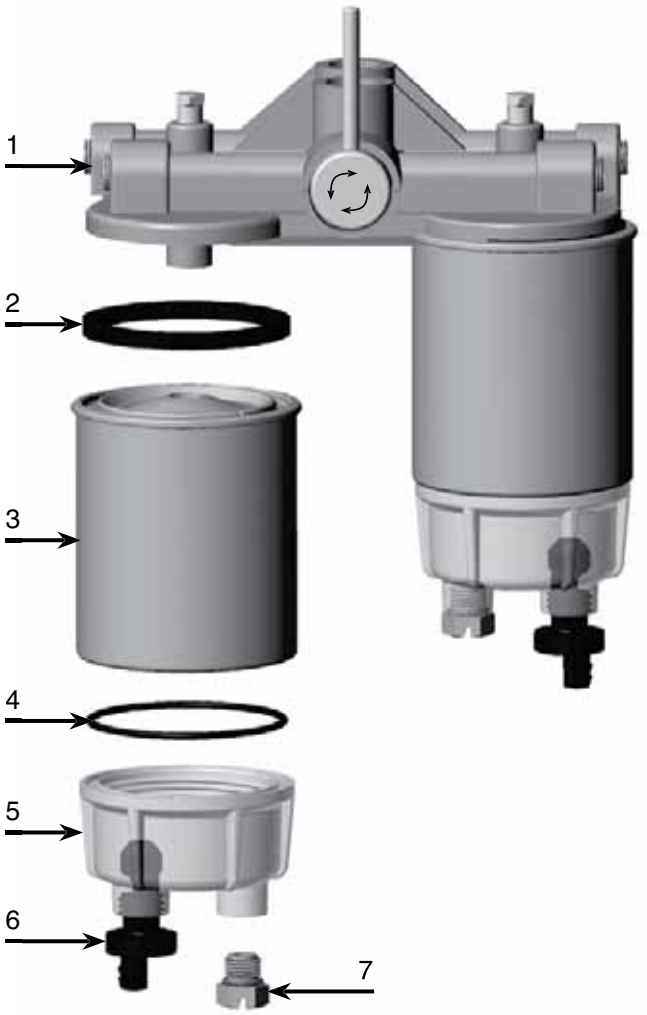

Engine Spin-On Series

Racor quality in one easy spin! The Racor Engine Spin-On Series is designed to directly replace existing engine fuel filters and features high-capacity Aquabloc® II elements that remove contaminates and water. Optional accessories may include: mounting heads, fuel heaters, water detection kits, hose, fittings and more. A wide variety of Engine Spin-On Series assemblies are available to fit most applications.

And many more...

Engine Spin-On Series

How to Order

B120	S
Basic Model Number (includes element & bowl)	Specify a micron rating: S (2 micron) T (10 micron) P (30 micron)

Specifications	B120
Maximum Flow Rate	120 GPH (454 LPH)
Replacement Element: **(2 micron)** **(10 micron)** **(30 micron)**	 R120S R120T R120P
Element Height	8.5 in. (22 cm)
Bowl and Element Height	12 in. (30 cm)
Diameter	4.38 in. (11 cm)
Center Threads	1”-14
Solids Capacity	18.2 oz. (515 grams)
Case Quantity	6
H_2O Removal Efficiency	99%
Operating Temperature	-40° to +255°F (-40° to 124°C)

B120S
Assembly

Questions? Contact Technical Support:
800 344 3286 or 209 521 7860 ext. 7555
e-mail: racortech@parker.com

Engine Spin-On Series

Replacement Parts

B120

	Part Number	Description
1.	**RK20505**	Element Gasket
2.	Replacement Elements:	
	R120S	2 micron
	R120T	10 micron
	R120P	30 micron
3.	**RK30965**	Bowl O-ring
4.	**RK30480**	Standard Bowl Assembly (no water sensor port - see note below)
	RK30063	Clear Bowl Kit (non-heated
	RK30900	Heated, Clear Bowl Kit (12 volt dc, 200 watt, no water sensor port)
	RK30925	Heated, Clear Bowl Kit (24 volt dc, 200 watt, no water sensor port)
5.	Bowl and Element Assembly (includes #'s 1 - 4)	
	B120S	2 micron
	B120T	10 micron
	B120P	30 micron

Additional Parts (not shown)

RK30880	Water Detection Kit (other kits are available - see Accessories)
RK21539	Gasket Pack (includes #'s 1 and 3)

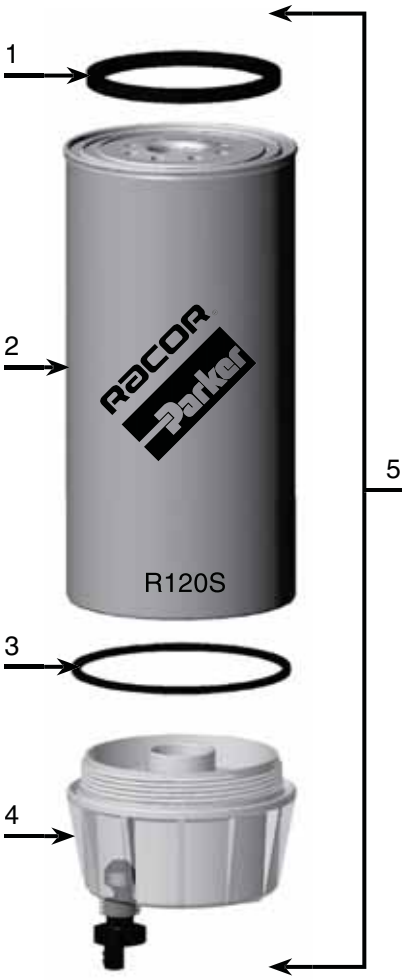

The standard B120 bowl does not have a water sensor port. Bowls with water sensor ports are available as replacement kits (see item #4 above). Do not use water sensors on gasoline applications.

Engine Spin-On Series

How to Order

S3201	S
Basic Model Number (includes element and bowl)	Specify a micron rating: S (2 micron) T (10 micron) P (30 micron)

Specifications	S3201
OEM Applications	Cummins or ThermoKing
Maximum Flow Rate	90 GPH (341 LPH)
Element Height	7.4 in. (18.8 cm)
Bowl and Element Height	10.6 in. (26.9 cm)
Diameter	3.82 in. (9.7 cm)
Center Threads	1”-14
Solids Capacity	11.6 oz. (329 grams)
Case Quantity	12
H_2O Removal Efficiency	99%
Operating Temperature	-40° to +255°F (-40° to 124°C)

S3201S
Filter

Cross References

All Racor S3201 replacement elements meet or exceed OEM specifications and replace all of the following filter numbers:

OEM	AC	Baldwin	Fleetguard	Fram	Purolator	Wix
Cummins: 138627 154709 156172 202893	TP619 TP629 TP811 TP972	BF7557 BF948 BF948D BF957 BF957D	FF104 FF105 FF105C/D FS1212 FF213	P1101PL	6683776 6694036 PER15 PER23-1 PER23-2	33107

Questions? Contact Technical Support:
800 344 3286 or 209 521 7860 ext. 7555
e-mail: racortech@parker.com

Engine Spin-On Series

Replacement Parts

B32001

	Part Number	Description
1.	**RK30287**	Optional Mounting Head Kit (7/8”-14 UNF Ports)
2.	**30563**	Thread Gasket
3.	**RK_10503**	Element Gasket
4.	Replacement Elements (includes #’s 2 to 5)	
	S3201S	(2 micron)
	S3201T	(10 micron)
	S3201P	(30 micron)
5.	**RK_30076**	Bowl O-ring
6.	**RK30475**	Optional Clear Bowl Kit (no water sensor port - see note below)
	RK30051	Non-heated, Clear Bowl Kit
	RK30895	Heated, Clear Bowl Kit (12 vdc, 200 watt, no water sensor port)
	RK30924	Heated, Clear Bowl Kit (24 vdc, 200 watt, no water sensor port)
	RK30745-01	Non-heated, Metal Bowl Kit
7.	**RK30880**	Water Detection Kit (other kits are available - see Accessories)

Additional Parts (not shown)

30562	Gasket Pack (includes #’s 2, 3, and 5)

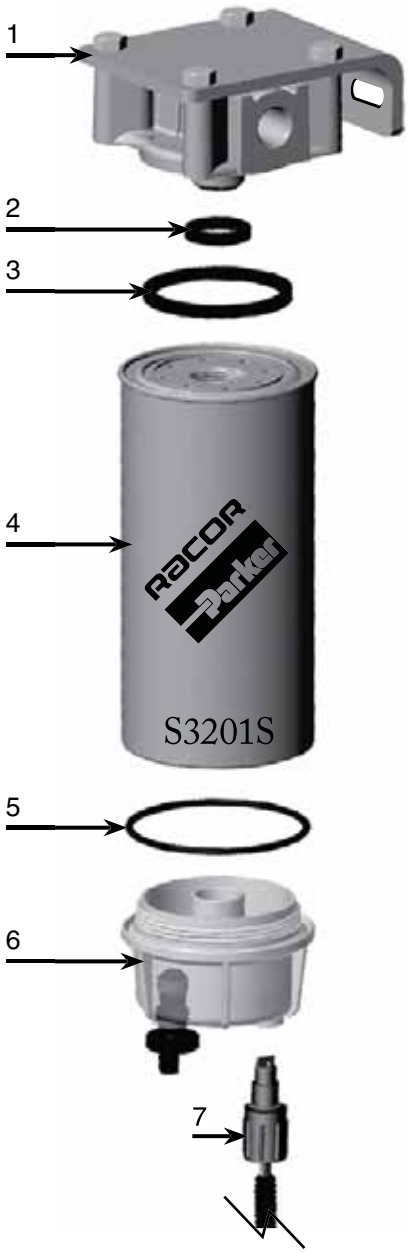

The standard S3201 bowl does not have a water sensor port. Bowls with water sensor ports are available as replacement kits (see item #6 above). Do not use water sensors on gasoline applications.

Engine Spin-On Series

How to Order

Specifications	B32002
OEM Applications	Detroit Diesel
Maximum Flow Rate	90 GPH (341 LPH)
Replacement Element: (30 micron)	S3202
Element Height	7.4 in. (18.8 cm)
Bowl and Element Height	10.6 in. (26.9 cm)
Diameter	3.82 in. (9.7 cm)
Center Threads	1”-12
Solids Capacity	19.6 oz. (557 grams)
Case Quantity	12
H_2O Removal Efficiency	99%
Operating Temperature	-40° to +255°F (-40° to 124°C)

B32002
Assembly

Cross References

All Racor B32002/S3202 replacement elements meet or exceed OEM specifications and replace all of the following filter numbers:

OEM	AC	Baldwin	Fleetguard	Fram	Purolator	Wix
DDA: 6438839	T815 T915	BF580	FF207 FS1213	P1146	PER96	33118

Questions? Contact Technical Support:
800 344 3286 or 209 521 7860 ext. 7555
e-mail: racortech@parker.com

Engine Spin-On Series

Replacement Parts

B32002/S3202

	Part Number	Description
1.	**30563**	Thread Gasket
2.	**RK20505**	Element Gasket
3.	Replacement Element (includes #'s 1 to 4)	
	S3202	(30 micron)
4.	**RK_30076**	Bowl O-ring
5.	**RK30475**	Clear Bowl Kit (no water sensor port - see note below)
	RK30051	Clear, Non-heated Bowl Kit
	RK30745-01	Non-heated, Metal Bowl Kit
	RK30895	Heated, Clear Bowl Kit (12 volt dc, 200 watt, no water sensor port)
	RK30924	Heated, Clear Bowl Kit (24 volt dc, 200 watt, no water sensor port)
6.	**RK30880**	Water Detection Kit (other kits are available - see Accessories)
7.	Bowl and Element Assembly (includes #'s 1 - 5)	
	B32002	(30 micron)

Additional Parts (not shown)

21381	Gasket Pack (includes #'s 1, 2, and 4)

The standard B32002 bowl has no water sensor port. Bowls with water sensor ports are available as replacement kits (see item #5 above). Do not use water sensors on gasoline applications.

Engine Spin-On Series

How to Order

Specifications	B32003
OEM Applications	Caterpillar or Navistar
Maximum Flow Rate	90 GPH (341 LPH)
Replacement Element: (2 micron)	S3203
Element Height	5.5 in. (14.0 cm)
Bowl and Element Height	8.7 in. (22.1 cm)
Diameter	3.82 in. (9.7 cm)
Center Threads	1”-14
Solids Capacity	7.1 oz. (201 grams)
Case Quantity	12
H_2O Removal Efficiency	99%
Operating Temperature	-40° to +255°F (-40° to 124°C)

B32003
Assembly

Cross References

All Racor B32003/S3203 replacement elements meet or exceed OEM specifications and replace all of the following filter numbers:

OEM	AC	Baldwin	Fleetguard	Fram	Purolator	Wix
Caterpillar: 1P2299 6L7440 Cummins: 138627 International: 625627C1	TP619 TP877	BF957 BF970 BF979	FF5020 FS104 FS1212 FS1214 FS1215 FS1225 FS185	P1101PL P1104 P1118	PER15 PER35 PER39 PER53	33107 33341 33352

Questions? Contact Technical Support:
800 344 3286 or 209 521 7860 ext. 7555
e-mail: racortech@parker.com

Engine Spin-On Series

Replacement Parts

B32003/S3203

	Part Number	Description
1.	**RK30287**	Optional Mounting Head Kit (7/8”-14 UNF ports)
2.	**30563**	Thread Gasket
3.	**RK_10503**	Element Gasket
4.	Replacement Element (includes #’s 2 to 5)	
	S3203	(2 micron)
5.	**RK_30076**	Bowl O-ring
6.	**RK30475**	Clear Bowl Kit (no water sensor port - see note below)
	RK30051	Clear, Non-heated Bowl Kit
	RK30745-01	Non-heated, Metal Bowl Kit
	RK30895	Heated, Clear Bowl Kit (12 volt dc, 200 watt, no water sensor port)
	RK30924	Heated, Clear Bowl Kit (24 volt dc, 200 watt, no water sensor port)
7.	**RK30880**	Water Detection Kit (other kits are available, see Accessories)
8.	Bowl and Element Assembly (includes #’s 2 - 6)	
	B32003	(2 micron)
	Additional Parts (not shown)	
	30562	Gasket Pack (includes #’s 2, 3, and 5)

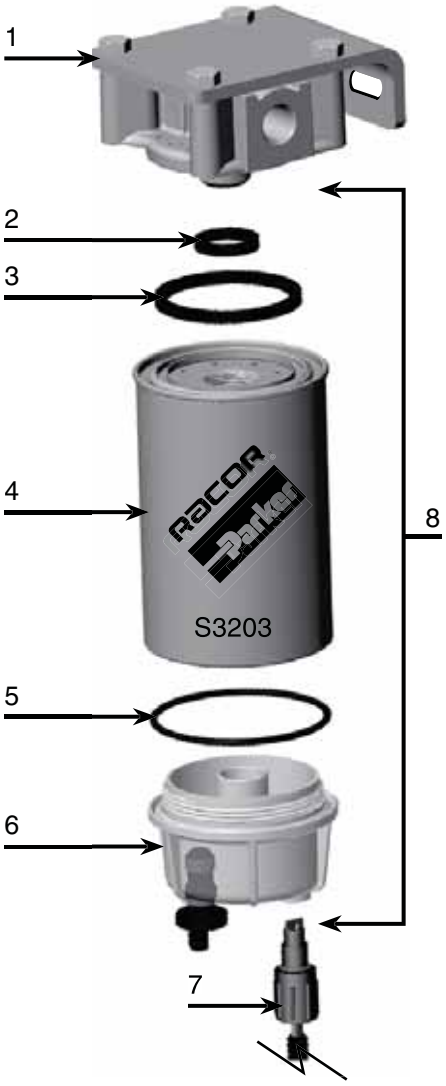

The standard B32003 bowl has no water sensor port. Bowls with water sensor ports are available as replacement kits (see item #6 above). Do not use water sensors on gasoline applications.

Engine Spin-On Series

How to Order

B32004	S
Basic Model Number (includes element & bowl)	Specify a micron rating: **S** (2 micron) **T** (10 micron) **P** (30 micron)

Specifications	B32004
OEM Applications	Navistar
Maximum Flow Rate	40 GPH (151 LPH)
Replacement Element: **(2 micron)** **(10 micron)** **(30 micron)**	 S3204S S3204T S3204P
Element Height	4.0 in. (10.2 cm)
Bowl and Element Height	7.2 in. (18.3 cm)
Diameter	3.82 in. (9.7 cm)
Center Threads	1”-14
Solids Capacity	9.0 oz. (255 grams)
Case Quantity	12
H_2O Removal Efficiency	99%
Operating Temperature	-40° to +255°F (-40° to 124°C)

B32004S
Assembly

Cross References

All Racor B32004/S3204 replacement elements meet or exceed OEM specifications and replace all of the following filter numbers:

OEM	AC	Baldwin	Fleetguard	Fram	Purolator	Wix
International: 625625C1	TP807	BF984	FF196 FS1220	P1117 P3767	PER35	33239

Questions? Contact Technical Support:
800 344 3286 or 209 521 7860 ext. 7555
e-mail: racortech@parker.com

Engine Spin-On Series

Replacement Parts

B32004/S3204

	Part Number	Description
1.	**RK30287**	Optional Mounting Head Kit
		(7/8”-14 UNF ports)
2.	**30563**	Thread Gasket
3.	RK_**10503**	Element Gasket
4.	Replacement Elements (includes #’s 2 to 5)	
	S3204S	(2 micron)
	S3204T	(10 micron)
	S3204P	(30 micron)
5.	RK_**30076**	Bowl O-ring
6.	**RK30475**	Clear Bowl Kit
	(no water sensor port - see note below)	
	RK30051	Clear, Non-heated Bowl Kit
	RK30745-01	Non-heated, Metal Bowl Kit
	RK30895	Heated, Clear Bowl Kit
	(12 volt dc, 200 watt, no water sensor port)	
	RK30924	Heated, Clear Bowl Kit
	(24 volt dc, 200 watt, no water sensor port)	
7.	**RK30880**	Water Detection Kit
	(other kits are available - see Accessories)	
8.	Bowl and Element Assembly (includes #’s 2 - 6)	
	B32004S	(2 micron)
	B32004T	(10 micron)
	B32004P	(30 micron)
	Additional Parts (not shown)	
	30562	Gasket Pack
		(includes #’s 2, 3, and 5)

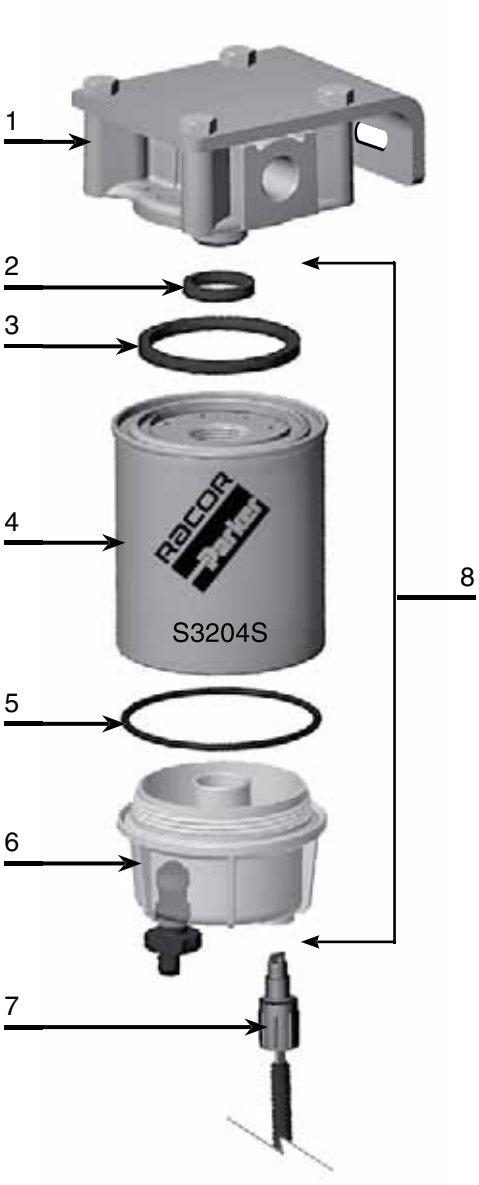

The standard B32004 bowl has no water sensor port. Bowls with water sensor ports are available as replacement kits (see item #6 above). Do not use water sensors on gasoline applications.

Engine Spin-On Series

How to Order

Specifications	S3205
OEM Applications	Mack
Maximum Flow Rate	90 GPH (341 LPH)
Replacement Element: (30 micron)	S3205
Element Height	6.3 in. (16.0 cm)
Bowl and Element Height	9.8 in. (24.9 cm)
Diameter	4.38 in. (11.1 cm)
Center Threads	1”-14
Solids Capacity	19.1 oz. (541 grams)
Case Quantity	6
H_2O Removal efficiency	99%
Operating Temperature	-40° to +255°F (-40° to 124°C)

S3205
Element

Cross References

All Racor S3205 replacement elements meet or exceed OEM specifications and replace all of the following filter numbers:

OEM	AC	Baldwin	Fleetguard	Fram	Purolator	Wix
Mack: 483GB219A	TP635	BF877	FF172 FS1219	F1109	PER31	33219

Questions? Contact Technical Support:
800 344 3286 or 209 521 7860 ext. 7555
e-mail: racortech@parker.com

Engine Spin-On Series

Replacement Parts

S3205

	Part Number	Description
1.	**RK_10503**	Element Gasket
2.	Replacement Elements (includes #'s 1 to 3)	
	S3205	(30 micron)
3.	**RK_30965**	Bowl O-ring
4.	**RK30480**	Optional Clear Bowl Kit (no water sensor port - see note below)
	RK30063	Non-heated, Clear Bowl Kit
	RK21640	Non-heated, Metal Bowl Kit
	RK30900	Heated, Clear Bowl Kit (12 volt dc, 200 watt, no water sensor port)
	RK30925	Heated, Clear Bowl Kit (24 volt dc, 200 watt, no water sensor port)
5.	**RK30880**	Optional Water Detection Kit (other kits are available - see Accessories)

Additional Parts (not shown)

22310	Gasket Pack (includes #'s 1 and 3)

Engine Spin-On Series

How to Order

Specifications	S3206
OEM Applications	Caterpillar
Maximum Flow Rate	90 GPH (341 LPH)
Replacement Element: (2 micron)	S3206
Element Height	8.5 in. (21.6 cm)
Bowl and Element Height	12.0 in. (30.5 cm)
Diameter	4.38 in. (11.1 cm)
Center Threads	1”-14
Solids Capacity	18.2 oz. (515 grams)
Case Quantity	6
H_2O Removal Efficiency	99%
Operating Temperature	-40° to +255°F (-40° to 124°C)

S3206
Element

Cross References

All Racor S3206 replacement elements meet or exceed OEM specifications and replace all of the following filter numbers:

OEM	AC	Baldwin	Fleetguard	Fram	Purolator	Wix
Caterpillar: 4N5823	TP-920	BF-584	FF211 FS1218	P3376	PER85	33384

Questions? Contact Technical Support:
800 344 3286 or 209 521 7860 ext. 7555
e-mail: racortech@parker.com

Engine Spin-On Series

Replacement Parts

S3206

	Part Number	Description
1.	**RK30287**	Optional Mounting Head Kit (7/8”-14 UNF ports)
2.	**RK_10503**	Element Gasket
3.	Replacement Elements (includes #’s 2 to 4)	
	S3206	(2 micron)
4.	RK_**30965**	Bowl O-ring
5.	**RK30480**	Optional Clear Bowl Kit (no water sensor port - see notes below)
	RK30063	Non-heated, Clear Kit
	RK21640	Non-heated, Metal Bowl
	RK30900	Heated, Clear Bowl (12 volt dc, 200 watt, no water sensor port)
	RK30925	Heated, Clear Bowl (24 volt dc, 200 watt, no water sensor port)
6.	**RK30880**	Optional Water Detection Kit (Other kits are available - see Accessories)

Additional Parts (not shown)

22310	Gasket Pack (includes #’s 2 and 4)

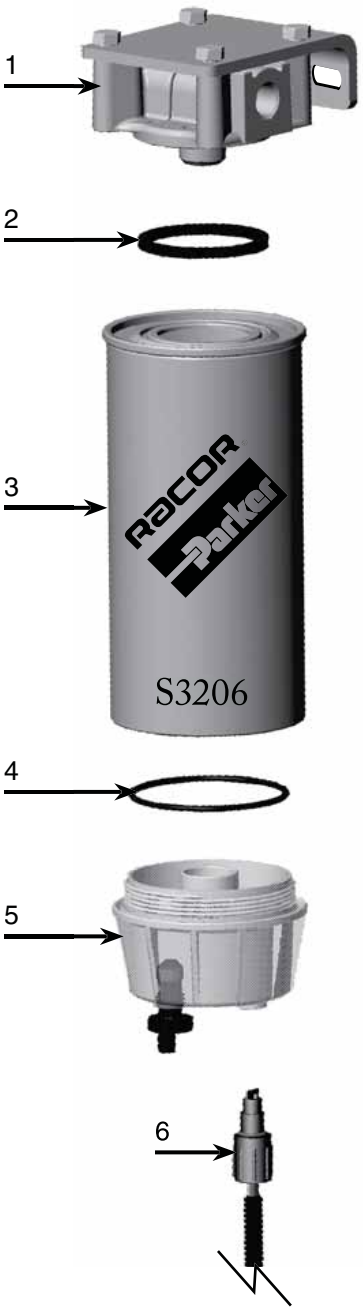

Engine Spin-On Series

How to Order

B32007	P
Basic Model Number (includes element & bowl)	Specify a micron rating **P** (30 micron)

Specifications	B32007
OEM Applications	Cummins
Maximum Flow Rate	180 GPH (681 LPH)
Replacement Element: (30 micron)	S3207P
Element Height	9.9 in. (25.1 cm)
Bowl and Element Height	13.5 in. (34.3 cm)
Diameter	5.09 in. (12.9 cm)
Center Threads	1¼" -14
Solids Capacity	28.4 oz. (804 grams)
Case Quantity	6
Operating Temperature	-40° to +255°F (-40° to 124°C)

B32007P
Assembly

Cross References

All Racor B32007P/S3207P replacement elements meet or exceed OEM specifications and replace all of the following filter numbers:

OEM	AC	Baldwin	Fleetguard	Fram	Purolator	Wix
Cummins: 299202	TP-917	BF-596	FF202 FS1216	P3430	PER134	33116

Questions? Contact Technical Support:
800 344 3286 or 209 521 7860 ext. 7555
e-mail: racortech@parker.com

Engine Spin-On Series

Replacement Parts

B32007P/S3207P

	Part Number	Description
1.	**31547-16**	Optional Mounting Head Kit (7/8”-14 UNF ports)
2.	**30604**	Element Gasket
3.	Replacement Elements (includes #’s 2 to 4)	
	S3207P	(30 micron)
4.	**RK_30965**	Bowl O-ring
5.	**RK30480**	Clear Bowl Kit (no water sensor port - see note below)
	RK30063	Non-heated, Clear Bowl Kit
	RK21640	Non-heated, Metal Bowl Kit
	RK30900	Heated, Clear Bowl Kit (12 volt dc, 200 watt, no water sensor port)
	RK30925	Heated, Clear Bowl Kit (24 volt dc, 200 watt, no water sensor port)
6.	**RK30880**	Water Detection Kit (other kits are available - see Accessories)
7.	Bowl and Element Assembly (includes #’s 2 - 5)	
	B32007P	(30 micron)
	Additional Parts (not shown)	
	22311	Gasket Pack (includes #’s 2 and 4)

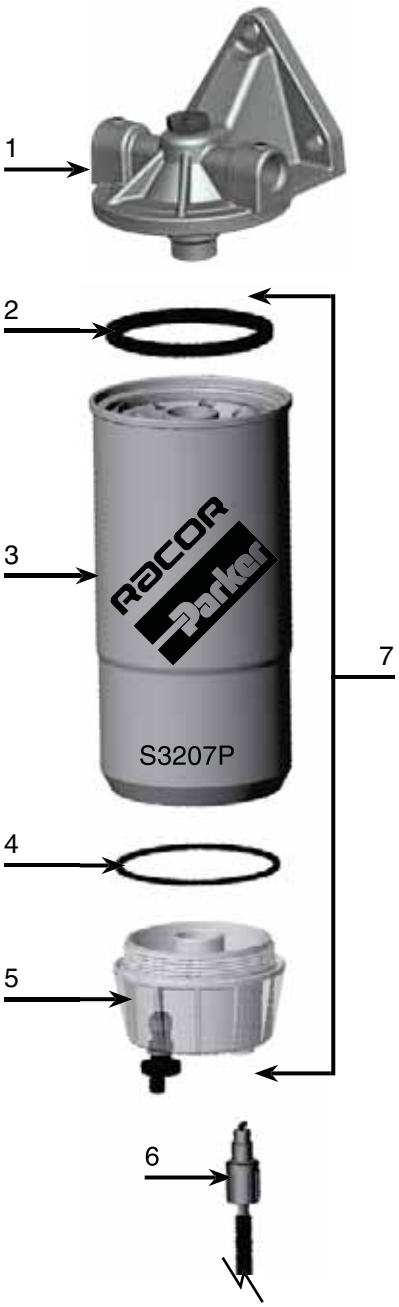

The standard B32007 bowl has no water sensor port. Bowls with water sensor ports are available as replacement kits (see item #5 above). Do not use water sensors on gasoline applications.

Engine Spin-On Series

How to Order

B32008	P
Basic Model Number (includes element & bowl)	Specify a micron rating: P (30 micron)

Specifications	B32008
OEM Applications	Deutz or Volvo
Maximum Flow Rate	30 GPH (114 LPH)
Replacement Element: **(2 micron)** **(10 micron)** **(30 micron)**	S3208P
Element Height	5.25 in. (13.3 cm)
Bowl and Element Height	7.25 in. (18.4 cm)
Diameter	2.85 in. (7.2 cm)
Center Threads	16mm X 1.5
Solids Capacity	9.7 oz. (275 grams)
Case Quantity	12
H_2O Removal Efficiency	99%
Operating Temperature	-40° to +255°F (-40° to 124°C)

B32008P
Assembly

Cross References

All Racor B32008P/S3208P replacement elements meet or exceed OEM specifications and replace all of the following filter numbers:

OEM	AC	Baldwin	Fleetguard	Fram	Purolator	Wix
Deutz: Q1H4117 Volvo: 243004	TP-961	BF-993	FF1221 FF202	P4102	PC-42	33195 336P

Questions? Contact Technical Support:
800 344 3286 or 209 521 7860 ext. 7555
e-mail: racortech@parker.com

Engine Spin-On Series

Replacement Parts

B32008P/S3208P

	Part Number	Description
1.	RK_**10503**	Element Gasket
2.	Replacement Elements (includes #'s 1 to 3)	
	S3208P	(30 micron)
3.	**RK_10012**	Bowl O-ring
4.	**N/A**	Clear Bowl Kit
	(no water sensor port - see notes below)	
	RK10215	Non-heated, Clear Bowl Kit
	RK10109	Non-heated Metal Bowl Kit
5.	**RK_30476**	Self-venting Drain
6.	**RK30880**	Water Detection Kit
	(other kits are available - see Accessories)	
7.	Bowl and Element Assembly (includes #'s 1 - 4)	
	B32008P	(30 micron)

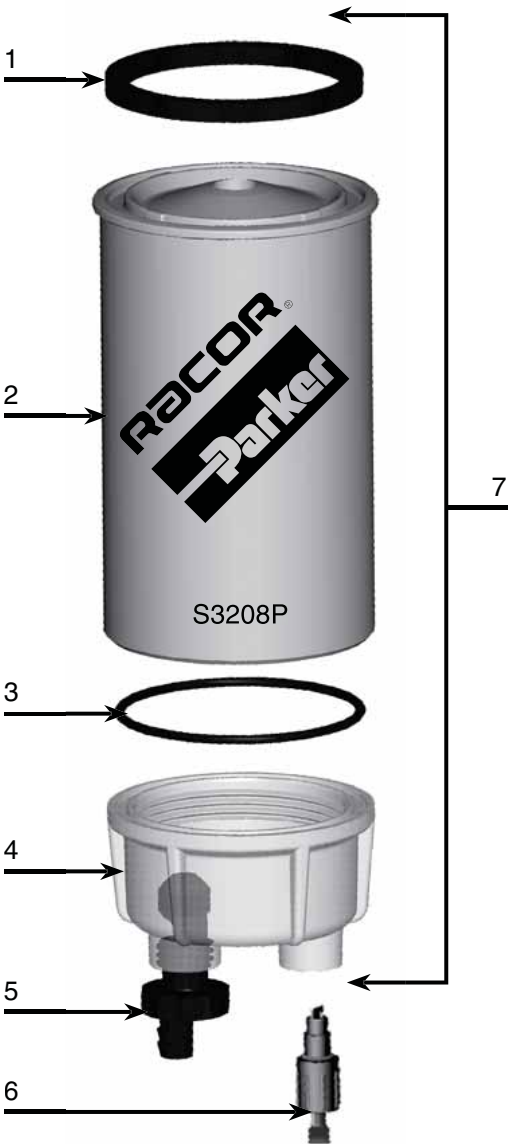

The standard B32008 bowl has no water sensor port. Other bowls with water sensor ports are available as replacement kits (see item #4 above). Water sensors are not for use with gasoline applications.

Engine Spin-On Series

How to Order

B32009	S
Basic Model Number (includes element & bowl)	Specify a micron rating: S (2 micron) T (10 micron) P (30 micron)

Specifications	B32009
OEM Applications	Mann
Maximum Flow Rate	60 GPH (227 LPH)
Replacement Element: **(2 micron)** **(10 micron)** **(30 micron)**	 S3209S S3209T S3209P
Element Height	5.5 in. (14.0 cm)
Bowl and Element Height	8.8 in. (22.4 cm)
Diameter	3.82 in. (9.7 cm)
Center Threads	16mm X 1.5
Solids Capacity	13.7 oz. (388 grams)
Case Quantity	12
Operating Temperature	-40° to +255°F (-40° to 124°C)

B32009S
Assembly

Cross References

All Racor B32009/S3209 replacement elements meet or exceed OEM specifications and replace all of the following filter numbers:

OEM	AC	Baldwin	Fleetguard	Fram	Purolator	Wix
Mann: WK962/4 DAF: 247138	N/A	BF980	FF4070	PS6837	PC45	33449

Questions? Contact Technical Support:
800 344 3286 or 209 521 7860 ext. 7555
e-mail: racortech@parker.com

Engine Spin-On Series

Replacement Parts

B32009/S3209

	Part Number	Description
1.	**30563**	Thread Gasket
2.	**RK_10503**	Element Gasket
3.	Replacement Elements (includes #'s 1 to 4)	
	S3209S	(2 micron)
	S3209T	(10 micron)
	S3209P	(30 micron)
4.	RK_**30076**	Bowl O-ring
5.	**RK30475**	Clear Bowl Kit (no water sensor port - see note below)
	RK30051	Non-heated, Clear Bowl Kit
	RK30745-01	Non-heated, Metal Bowl Kit
	RK30895	Heated, Clear Bowl Kit (12 vdc, 200 watt no water sensor port)
	RK30924	Heated, Clear Bowl Kit (24 vdc, 200 watt no water sensor port)
6.	Bowl and Element Assembly (includes #'s 1 - 5)	
	B32009S	(2 micron)
	B32009T	(10 micron)
	B32009P	(30 micron)

Additional Parts (not shown)

RK30880	Water Detection Kit (other kits are available - see Accessories)
30562	Gasket Pack (includes #'s 1, 2, and 4)

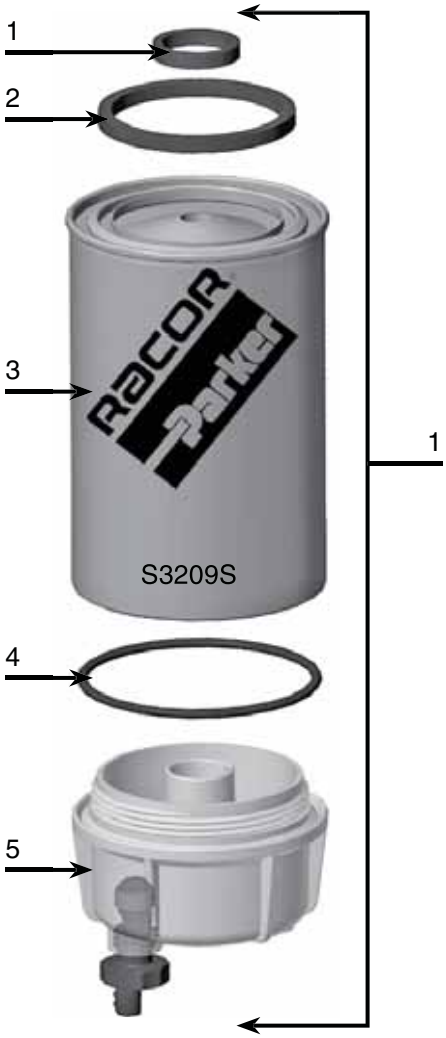

The standard B32009 bowl has no water sensor port. Bowls with water sensor ports are available as replacement kits (see item #5 above). Do not use water sensors on gasoline applications.

Engine Spin-On Series

How to Order

Specifications	B32012
OEM Applications	GM or Detroit Diesel
Maximum Flow Rate	90 GPH (341 LPH)
Replacement Element: (30 micron)	S3212
Element Height	4.0 in. (10.2 cm)
Bowl and Element Height	7.3 in. (18.5 cm)
Diameter	3.82 in. (9.7 cm)
Center Threads	1”-12
Solids Capacity	8.2 oz. (233 grams)
Case Quantity	12
Operating Temperature	-40° to +255°F (-40° to 124°C)

B32012
Assembly

Cross References

All Racor B32012/S3212 replacement elements meet or exceed OEM specifications and replace all of the following filter numbers:

OEM	AC	Baldwin	Fleetguard	Fram	Purolator	Wix
N/A	TP-936	BF-592	FF235	P2594	PER227F	33121

Questions? Contact Technical Support:
800 344 3286 or 209 521 7860 ext. 7555
e-mail: racortech@parker.com

Engine Spin-On Series

Replacement Parts

B320012/S3212

	Part Number	Description
1.	**30563**	Thread Gasket
2.	**RK20505**	Element Gasket
3.	Replacement Elements (includes #'s 1 to 4)	
	S3212	(30 micron)
4.	**RK_30076**	Bowl O-ring
5.	**RK30475**	Clear Bowl Kit
	(no water sensor port - see note below)	
	RK30051	Non-heated, Clear Bowl Kit
	RK30745-01	Non-heated, Metal Bowl Kit
	RK30895	Heated, Clear Bowl Kit
	(12 vdc, 200 watt, no water sensor port)	
	RK30924	Heated, Clear Bowl Kit
	(24 vdc, 200 watt, no water sensor port)	
6.	**RK30476**	Self Venting Drain Kit
7.	Bowl and Element Assembly (includes #'s 1 - 5)	
	B32012	(30 micron)

Additional Parts (not shown)

RK30880	Water Detection Kit
(other kits are available - see Accessories)	
21381	Gasket Pack
	(includes #'s 1, 2, and 4)

The standard B32012 bowl has no water sensor port. Bowls with water sensor ports are available as replacement kits (see item #5 above). Do not use water sensors on gasoline applications.

Engine Spin-On Series

How to Order

B32016	S
Basic Model	Specify a micron rating: **S** (2 micron) **T** (10 micron) **P** (30 micron)

Specifications	B32016
Maximum Flow Rate	20 GPH (76 LPH)
Replacement Element: **(2 micron)** **(10 micron)** **(30 micron)**	 S3216S S3216T S3216P
Element Height	4.0 in. (10.2 cm)
Bowl and Element Height	5.85 in. (14.9 cm)
Diameter	2.85 in. (7.2 cm)
Center Threads	16 mm X 1.5
Solids Capacity	6.4 oz. (182 grams)
Case Quantity	12
Operating Temperature	-40° to +255°F (-40° to 124°C)

B32016S
Assembly

Cross References

All Racor B32016/S3216 replacement elements meet or exceed OEM specifications and replace all of the following filter numbers:

OEM	AC	Baldwin	Fleetguard	Fram	Purolator	Wix
N/A	N/A	BF1267	N/A	N/A	N/A	33392

Questions? Contact Technical Support:
800 344 3286 or 209 521 7860 ext. 7555
e-mail: racortech@parker.com

Engine Spin-On Series

Replacement Parts

B32016/S3216

	Part Number	Description
1.	**RK_10503**	Element Gasket
2.	Replacement Elements (includes #'s 1 to 3)	
	S3216S	(2 micron)
	S3216T	(10 micron)
	S3216P	(30 micron)
3.	RK_**10012**	Bowl O-ring
4.	**N/A**	Clear Bowl Kit
	RK10215	Non-heated, Clear Bowl Kit
	RK10109	Non-heated, Metal Bowl Kit
5.	**RK30476**	Self Venting Drain Kit
6.	RK_**20126**	Water Sensor Port Plug ½" SAE (includes O-ring)
7.	Bowl and Element Assembly (includes #'s 1 and 3)	
	B32016S	(2 micron)
	B32016T	(10 micron)
	B32016P	(30 micron)

Additional Parts (not shown)

RK30880 Water Detection Kit
(other kits are available - see Accessories)

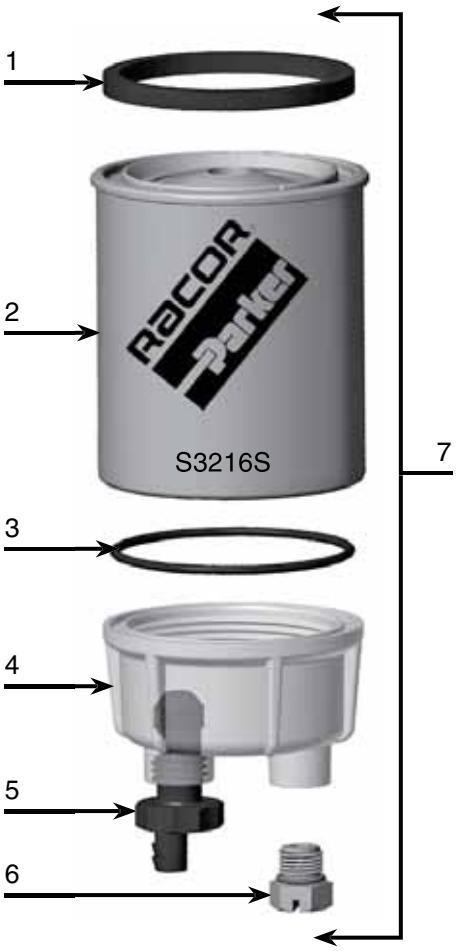

Do not use water sensors on gasoline applications.

Engine Spin-On Series

How to Order

Specifications	S3229
Maximum Flow Rate	90 GPH (341 LPH)
Replacement Element: (10 micron)	S3229
Element Height	7.3 in. (18.5 cm)
Bowl and Element Height	10.6 in. (26.9 cm)
Diameter	3.82 in. (9.7 cm)
Center Threads	1”-12
Case Quantity	12
Operating Temperature	-40° to +255°F (-40° to 124°C)

Questions? Contact Technical Support:
800 344 3286 or 209 521 7860 ext. 7555
e-mail: racortech@parker.com

Engine Spin-On Series

Replacement Parts

S3229

	Part Number	Description
1.	**30563**	Thread Gasket
2.	**20505**	Element Gasket
3.	Replacement Element (includes #'s 1 to 4)	
	S3229	(10 micron)
4.	**30076**	Bowl O-ring
5.	**RK30475**	Standard Bowl Kit (no water sensor port - see notes below)
	RK30051	Non-heated, Clear Bowl Kit
	RK30745-01	Non-heated, Metal Bowl Kit
	RK30895	Heated, Clear Bowl Kit (12 vdc, 200 watt, no water sensor port)
	RK30924	Heated, Clear Bowl Kit (24 vdc, 200 watt, no water sensor port)
6.	**RK30476**	Self Venting Drain Kit

Additional Parts (not shown)

RK30880	Water Detection Kit (other kits are available - see Accessories)
21381	Gasket Pack (includes #'s 1, 2, and 4)

The standard B32029 bowl has no water sensor port. Bowls with water sensor ports are available as replacement kits (see item #5 above). Do not use water sensors on gasoline applications.

Engine Spin-On Series

How to Order

Specifications	S3238
Maximum Flow Rate	150 GPH (568 LPH)
Element Height	6.4 in. (16.3 cm)
Bowl and Element Height	9.9 in. (25.1 cm)
Diameter	4.38 in. (11.1 cm)
Center Threads	1 ¼”-12
Case Quantity	6
Operating Temperature	-40° to +255°F (-40° to 124°C)

Questions? Contact Technical Support:
800 344 3286 or 209 521 7860 ext. 7555
e-mail: racortech@parker.com

Engine Spin-On Series

Replacement Parts

S3238

	Part Number	Description
1.	**RK31547**	Optional Mounting Head Kit (7/8”-14 UNF port)
2.	**30604**	Element Gasket
3.	Replacement Elements (includes #’s 2 to 4)	
	S3238	(10 micron)
4.	**30965**	Bowl O-ring
5.	**RK30480**	Clear Bowl Kit (no water sensor port - see note below)
	RK30063	Non-heated, Clear Bowl Kit
	RK21640	Non-heated, Metal Bowl Kit
	RK30900	Heated, Clear Bowl Kit (12 volt dc, 200 watt, no water sensor port)
	RK30925	Heated, Clear Bowl Kit (24 volt dc, 200 watt, no water sensor port)
6.	Bowl and Element Assembly (includes #’s 2 - 5)	
	B32038T	(10 micron)
	Additional Parts (not shown)	
	RK30880	Water Detection Kit (other kits are available - see Accessories)
	22311	Gasket Pack (includes #’s 2 and 4)

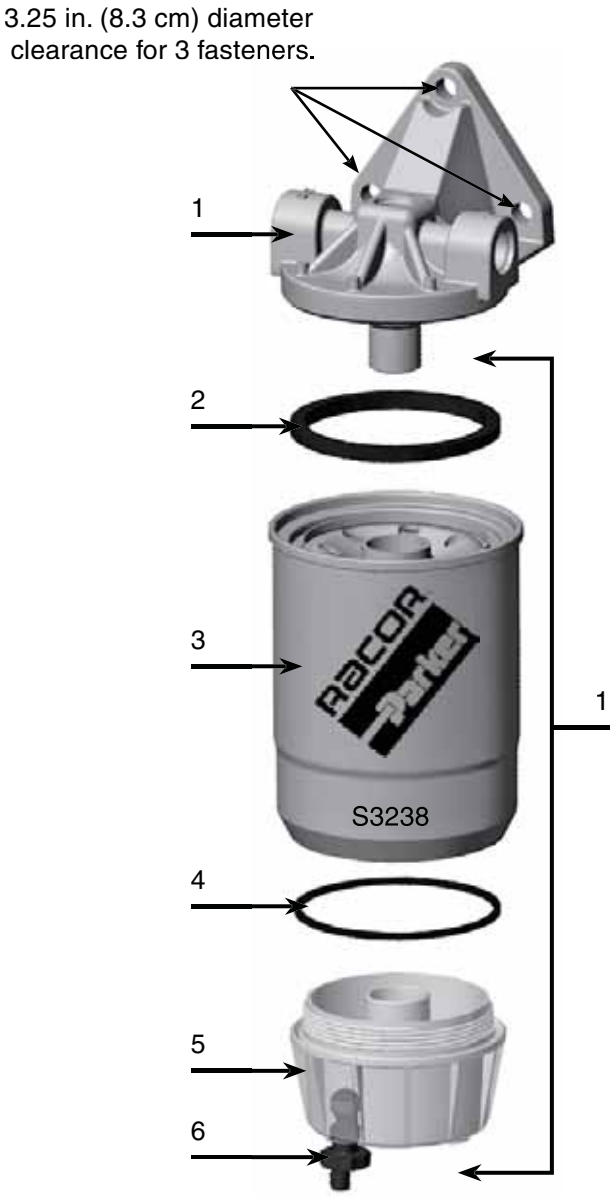

The standard B32038 bowl has no water sensor port. Bowls with water sensor ports are available as replacement kits (see item #5 above). Do not use water sensors on gasoline applications.

Engine Spin-On Series

Engine Spin-On Series Overview

Part Number	Description	Max Flow Rate	Thread	Micron Rating	Height	Diameter	Solids Capacity	Typical Application
B120S B120T B120P	Bowl & Element	120 GPH (454 LPH)	1”-14	2 10 30	12.0 in. (30.5 cm)	4.4 in. (11.1 cm)	18.2 oz. (515 g)	General Use
R120S R120T R120P	Element Only			2 10 30	8.5 in. (21.6 cm)			
B32001T B32001P	Bowl & Element	90 GPH (341 LPH)	1”-14	10 30	10.6 in. (26.9 cm)	3.8 in. (9.7 cm)	11.6 oz. (329 g)	Cummins or ThermoKing
S3201S S3201T S3201P	Element Only			2 10 30	7.4 in. (18.8 cm)			
B32002	Bowl & Element	90 GPH (341 LPH)	1”-12	30	10.6 in. (26.9 cm)	3.8 in. (9.7 cm)	19.6 oz. (557 g)	Detroit Diesel
S3202	Element Only			30	7.4 in. (18.8 cm)			
B32003	Bowl & Element	90 GPH (341 LPH)	1”-14	2	8.7 in. (22.1 cm)	3.8 in. (9.7 cm)	7.1 oz. (201 g)	Caterpillar or Navistar
S3203	Element Only			2	5.5 in. (14.0 cm)			
B32004S B32004T B32004P	Bowl & Element	40 GPH (151 LPH)	1”-14	2 10 30	7.2 in. (18.3 cm)	3.8 in. (9.7 cm)	9.0 oz. (255 g)	Navistar
S3204S S3204T S3204P	Element Only			2 10 30	4.0 in. (10.2 cm)			
S3205	Element Only	90 GPH (341 LPH)	1”-14	30	6.3 in. (16.0 cm)	4.4 in. (11.1 cm)	19.1 oz. (541 g)	Mack
S3206	Element Only	90 GPH (341 LPH)	1”-14	2	8.5 in. (21.6 cm)	4.4 in. (11.1 cm)	18.2 oz. (515 g)	Caterpillar
S3207S S3207T S3207P	Element Only	180 GPH (681 LPH)	1 1/4”-14	2 10 30	9.9 in. (25.1 cm)	5.1 in. (12.9 cm)	28.4 oz. (804 g)	Cummins
B32008P	Bowl & Element	30 GPH (114 LPH)	16mm X 1.5	30	7.3 in. (18.4 cm)	2.9 in. (7.2 cm)	9.7 oz. (275 g)	Deutz or Volvo
S3208S S3208T S3208P	Element Only			2 10 30	5.3 in. (13.3 cm)			
B32009P	Bowl & Element	60 GPH (227 LPH)	16mm X 1.5	30	8.8 in. (22.4 cm)	3.8 in. (9.7 cm)	13.7 oz. (388 g)	Mann
S3209S S3209T S3209P	Element Only			2 10 30	5.5 in. (14.0 cm)			

Engine Spin-On Series

Engine Spin-On Series Overview

Part Number	Description	Max Flow Rate	Thread	Micron Rating	Height	Diameter	Solids Capacity	Typical Application
B32011	Bowl & Element	90 GPH (341 LPH)	1”-14	10	8.6 in. (21.9 cm)	3.6 in. (9.2 cm)	8.2 oz. (232 g)	Cummins
S3211	Element Only			10	5.5 in. (14.0 cm)			
B32012	Bowl & Element	90 GPH (341 LPH)	1”-12	30	7.3 in. (18.5 cm)	3.8 in. (9.7 cm)	8.2 oz. (233 g)	GM or Detroit Diesel
S3212	Element Only			30	4.0 in. (10.2 cm)			
B32016S B32016T B32016P	Bowl & Element	20 GPH (76 LPH)	16mm X 1.5	2 10 30	5.9 in. (14.9 cm)	2.9 in. (7.2 cm)	6.4 oz. (182 g)	General Use
S3216S S3216T S3216P	Element Only			2 10 30	4.0 in. (10.2 cm)			
B32022	Bowl & Element	90 GPH (341 LPH)	1”-14	30	10.6 in. (26.9 cm)	3.8 in. (9.7 cm)	19.6 oz. (557 g)	General Use
S3222	Element Only			30	7.4 in. (18.8 cm)			
S3223	Element Only	90 GPH (341 LPH)	1”-14	30	8.5 in. (21.6 cm)	4.4 in. (11.1 cm)	18.2 oz. (515 g)	General Use
B32025S B32025T B32025P	Bowl & Element	60 GPH (227 LPH)	1”-14	2 10 30	8.4 in. (21.3 cm)	4.4 in. (11.1 cm)	10.8 oz. (305 g)	General Use
S3225S S3225T S3225P	Element Only			2 10 30	5.0 in. (12.7 cm)			
B32026S B32026T B32026P	Bowl & Element	75 GPH (284 LPH)	1”-14	2 10 30	9.6 in. (24.4 cm)	4.4 in. (11.1 cm)	19.1 oz. (541 g)	General Use
S3226S S3226T S3226P	Element Only			2 10 30	6.3 in. (16.0 cm)			
S3229	Element Only	90 GPH (341 LPH)	1”-12	10	7.3 in. (18.5 cm)	3.8 in. (9.7 cm)	18.2 oz. (515 g)	General Use
B32030S B32030T	Bowl & Element	60 GPH (227 LPH)	1”-14	2 10	8.8 in. (22.4 cm)	3.8 in. (9.7 cm)	13.7 oz. (388 g)	General Use
S3230S S3230T S3230P	Element Only			2 10 30	5.5 in. (14.0 cm)			
B32038 B32038P	Bowl & Element	150 GPH (568 LPH)	1 1/4”-12	10 30	9.9 in. (25.1 cm)	4.4 in. (11.1 cm)	28.4 oz. (804 g)	General Use
S3238 S3238P	Element Only			10 30	6.4 in. (16.3 cm)			

FS240 Series Fuel Senders

FS240 Series

Racor FS240 Series Electronic Fuel Senders are rugged and reliable, 100% solid state and designed for use in any 12 or 24 volt petroleum based product. They provide a continuous readout of the fuel level in the tank, and eliminate the need to continuously replace mechanical senders. FS240 Fuel Senders can be used in either stand alone application or they can be integrated with our Hot STK fuel heaters.

The FS240 Electronic Fuel Sender consist of a sensor probe and an amplifier which is located in the mounting plate assembly. All components are encapsulated in an epoxy resin to seal out moisture and other contaminants which could affect the operation of the unit. The mounting plate assembly uses the same standard, 5 hole SAE mounting bolt pattern as mechanical float sending units. They fit 12” to 30” tanks and are compatable with 0-33 ohm fuel gauges or (meters). The meter (receiving unit) can either be remotely located close by, or in your dash. FS240 Series Fuel Senders can drive either one or two meters simultaneously (switching between the meters is not required).

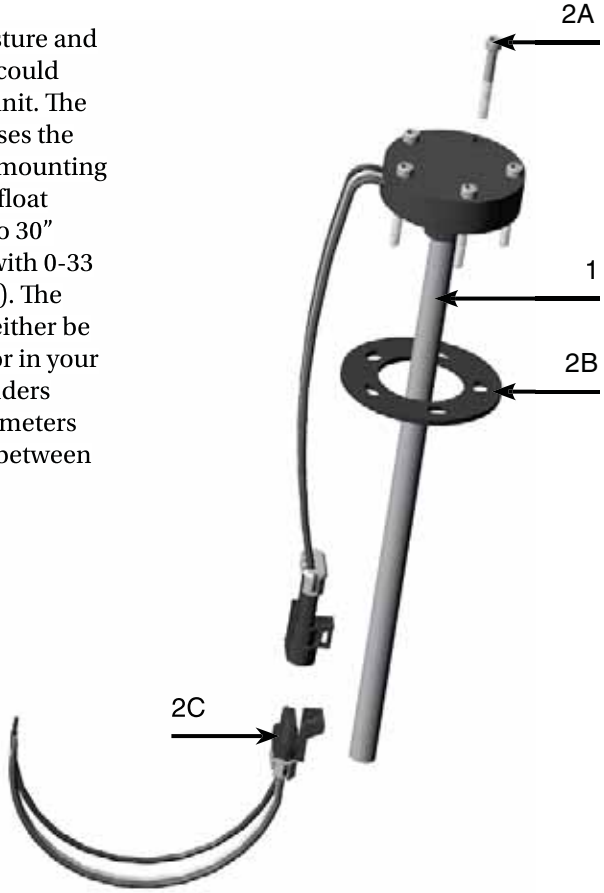

How to Order

(The examples below illustrate how part numbers are constructed).

FS240/	20
Basic Model Number	Specify a Tank Diameter: 20, 21, 22, 23, 24, 25, 26, or 27

Note: Additional lengths and styles are available; contact Racor Technical Support.

FS240 Replacement Part List

	Part No.	Description
1.	**FS240/**	Basic Fuel Sender Assembly
2.	**FS2703K**	Mounting Kit

Includes:

A. (5) 10/32” x 1.5” Screws

B. (1) Adaptor Plate Gasket

C. (1) Female Pigtail

Questions? Contact Technical Support:
800 344 3286 or 209 521 7860 ext. 7555
e-mail: racortech@parker.com

FS240 Series Fuel Senders

FS240 Series

General Instructions

Disconnect battery before beginning. Do not over-tighten mounting bolts; torque to a MAXIMUM of 15 in. lbs. This unit is calibrated at the factory for the EMPTY setting. The FULL setting may require a slight adjustment. Adjustment screws are located on top of module. Note: When ignition switch is on, fuel sender will show FULL for a few seconds, then drop back to the actual fuel level.

Wiring Instructions

Ground existing wire directly to frame using appropriate fasteners and ring terminals.

Top View

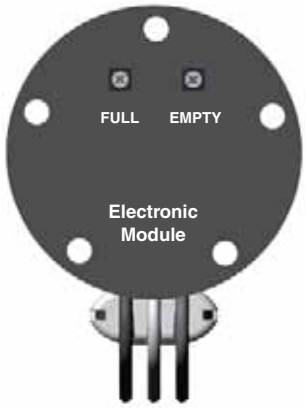

Red wire to ignition power (12 or 24 volt).
White wire to existing send wire off old sender.
Black wire to existing ground wire off old sender.

Note: If excess water is present in fuel tank, sender will show a false FULL reading until excess water is removed.

Re-calibration Instructions

Racor Electronic Fuel Senders are preset at the factory. Due to variance in fuel gauges and fuel tank filler neck placement, the fuel gauge may not show exactly FULL. The EMPTY level is nonadjustable. Note: Re-calibrate FULL level ONLY if needle variance is too extreme.

1. **Calibration procedures require two people (one to monitor fuel gauge, another to set adjustment screw). Note: Verify tank is full of fuel.**
2. **Turn ignition switch on.**
3. **Make adjustments carefully with small Phillips screwdriver. It may be necessary to remove silicone sealant from adjustment screw before adjustments are possible. Caution: Be careful when removing silicone sealant to avoid damage to adjustment screw.**
4. **Carefully turn FULL adjustment screw to full clockwise position.**
5. **Turn adjustment screw counter-clockwise very slowly, as a small rotation will cause a large needle movement. Keep turning until desired location is obtained on fuel gauge. If needle passes desired location, repeat procedure by turning screw clockwise until needle moves above desired position and then turn adjustment screw counter-clockwise again. Always set as needle is falling.**
6. **After calibration is complete, seal adjustment screws with a generous coat of a silicone sealant.**

Warning: Use of other than Racor components can cause damage and voids warranty.

P Series

P Series

P3

P4

P5

The Racor P Series filter assemblies are designed and manufactured to provide the highest possible value to the diesel engine, vehicle and equipment. The innovative and modular design of the P Series incorporates all of the low pressure fuel components required by the latest generation of electronically-controlled fuel injection systems. The consistent pressure and volume delivery of pure fuel under various engine speed, load and environmental conditions, are absolutely essential to achieve the efficiency levels required in today's engines. The modular design of the P Series allows features to be added or deleted independent of one another – providing a new level of design flexibility.

The P Series assemblies are available in three sizes and all feature ⅜" NPT inlet and outlet fuel ports and clear collection bowls.

Features and Benefits

- **A durable, 12 vdc roller-cell electric fuel pump offers the benefit of an electric, on demand priming pump. Fuel flow will bypass pump when not in use**
- **A thermostatically controlled PTC style electric (150 watt) heater for cold weather starting.**
- **The high performance Aquabloc®II cartridge style filter media has greater contaminant holding capacity, is environmentally friendly and can be incinerated.**
- **A clear removable and reusable contaminant collection bowl is standard on all models.**
- **A self-venting drain makes draining water quick and easy.**
- **A water-in-fuel (WIF) sensor alerts the operator when service is required.**
- **A under-dash control module for pump and water sensor operation is included with pump option.**

Questions? Contact Technical Support:
800 344 3286 or 209 521 7860 ext. 7555
e-mail: racortech@parker.com

P Series Overview

Specifications	P3	P4	P5
Maximum Flow Rate	30 GPH (114 LPH)	40 GPH (170 LPH)	50 GPH (227 LPH)
Clean Pressure Drop	0.4 PSI (2.8 kPa)	0.5 PSI (3.4 kPa)	0.8 PSI (5.5 kPa)
Maximum Pump Output (at 14.4 volts)	40 GPH (151 LPH)	40 GPH (151 LPH)	40 GPH (151 LPH)
Standard Fuel Port Size (SAE J476)	3/8”-18 NPT	3/8”-18 NPT	3/8”-18 NPT
Number of Ports Available: **(fuel inlets)** **(fuel outlets)**	2 1 1	2 1 1	2 1 1
Replacement Elements: **(2 micron)** **(10 micron)** **(30 micron)**	 R58060-02 R58060-10 R58060-30	 R58095-02 R58095-10 R58095-30	 R58039-02 R58039-10 R58039-30
Minimum Service Clearance	2.5 in. (2.8 cm)	2.5 in. (2.8 cm)	2.5 in. (2.8 cm)
Height	7.7 in. (19.6 cm)	9.0 in. (23.0 cm)	11.5 in. (29.2 cm)
Depth	5.2 in. (13.2 cm)	5.2 in. (13.2 cm)	5.2 in. (13.2 cm)
Width (with bracket)	8.8 in. (22.4 cm)	8.8 in. (22.4 cm)	8.8 in. (22.4 cm)
Weight (dry)	3.4 lb (1.5 kg)	3.8 lb (1.7 kg)	4.2 lb (1.9 kg)
Maximum Pump Outlet Pressure	10 PSI (0.7 bar)	10 PSI (0.7 bar)	10 PSI (0.7 bar)
Features:[1] **Water Sensor** **Heater** **Pressure Regulator (10 PSI)** **Pump By-pass Flow Valve**	 Standard Standard Standard Standard	 Standard Standard Standard Standard	 Standard Standard Standard Standard
H_2O Removal Efficiency	99%		
Operating Temperature	-40° to +255°F (-40° to +124°C)		

Vacuum installations are recommended. [1] Do not use on gasoline applications.

P Series

How to Order

P4	2	10	N	H
Specify a flow rate:P3 for 30 GPH, P4 for 40 GPH, or P5 for 50 GPH	2 must be in the part number. (It specifies a 12 vdc pump)	Specify micron rating: 02 for 2 micron, 10 for 10 micron, or 30 for 30 micron	N must be in the part number. (It specifies standard 3/8" NPT ports)	H must be in the part number. (It specifies a 12 vdc, 150 watt heater)

For continuous run pump operation, contact Technical Support at number listed below.

Mounting Information

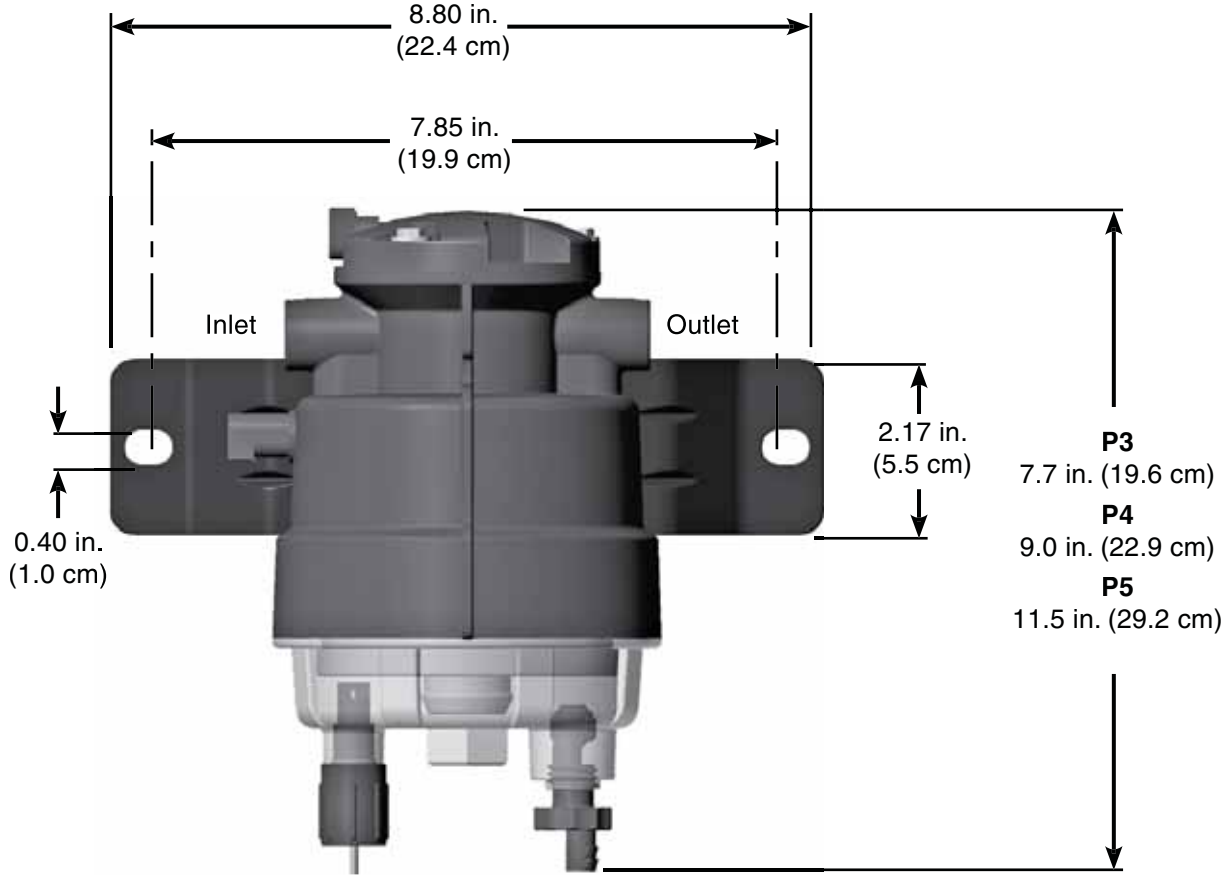

Questions? Contact Technical Support:
800 344 3286 or 209 521 7860 ext. 7555
e-mail: racortech@parker.com

P Series

Replacement Parts

	Part Number	Description
1.	**RK 58075**[1]	Pressure Regulator
2.	**RK 58109**[1]	Bracket Kit
3.	**58066**[1]	Element O-ring
4.	Replacement Elements (see Specifications chart) (includes #3)	
5.	**22099**[1]	Bowl O-ring
6.	Clear Bowls (includes #'s 5 to 8)	
	58179	P3 (shown)
	58180	P4
	58181	P5
7.	**RK 30476**[1]	Drain Valve Kit (includes # 5)
8.	**RK 21069**[1]	Water Probe Kit
9.	**RK58107**[1]	6-Way Electrical Harness Kit (includes #9)
10.	**58137**[1]	Mating Connector Harness
11.	**58132**[1]	Under-dash Control Panel

Notes: [1] For use with all models.

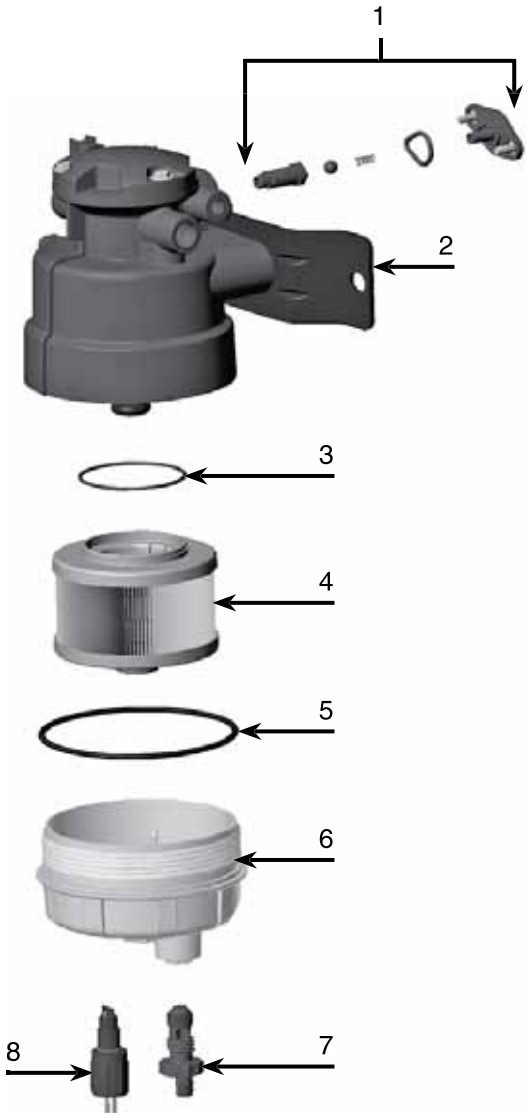

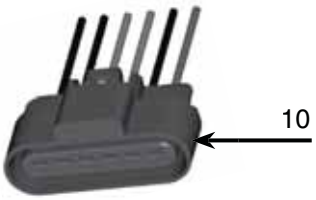

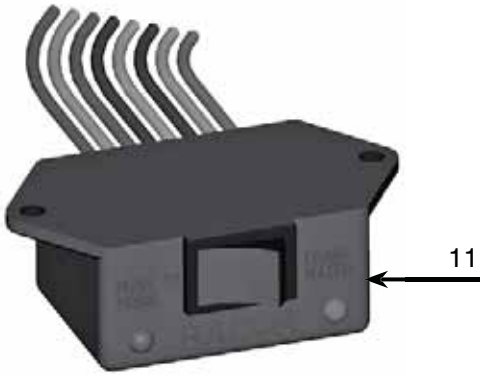

ParFit™ Products

For on/off highway vehicles and stationary equipment, ParFit fuel filter products protect expensive system components not only from microscopic solid contaminates, but from damaging water as well. ParFit products are engineered and manufactured to meet stringent quality requirements and Original Equipment Manufacturer (OEM) specifications for service life and efficiency.

When you specify ParFit filters, you know you're doing everything you can to protect your equipment, extend its life-cycle and effectiveness, and improve your bottom line. Models are available for direct spin-on replacement and with integral, die cast aluminum heads. The complete ParFit series includes OEM replacement filter/separators for the most popular diesel engines including: Navistar, Cummins, Detroit Diesel, Ford and Caterpillar. This means that you get the engine protection you want at a very competitive price.

And many more...

Questions? Contact Technical Support:
800 344 3286 or 209 521 7860 ext. 7555
e-mail: racortech@parker.com

ParFit™ Products

100 Series

Specifications	PF101
Maximum Flow Rate	65 GPH (246 LPH)
Maximum Working Pressure:	25 PSI (172 kPa)
Element Part Number: (2 micron) (10 micron) (30 micron)	 N/A PF101-10 N/A
Height	3.25 in. (8.3 cm)
Diameter	4.25 in. (10.8 cm)
Weight (dry)	0.4 lb (0.2 kg)
Operating Temperature	-50° to +225°F (-45° to +107°C)

200 Series

Specifications	PF201
Maximum Flow Rate	120 GPH (454 LPH)
Maximum Working Pressure:	25 PSI (172 kPa)
Element Part Number: (2 micron) (10 micron) (30 micron)	 PF201-2 PF201-10 PF201-30
Height	4.6 in. (11.7 cm)
Diameter	6.1 in. (10.8 cm)
Weight (dry)	1.0 lb (0.5 kg)
Operating Temperature	-50° to +225°F (-45° to +107°C)

ParFit™ Products

IN CAV Filter Adapter Kit

Filter adapter kit IN CAV converts old C.A.V. filter head canister and glass bowl units into a Spin-On filter assembly. This kit allows the use of Racor B32008 or B32016 Spin-On filters that feature patented clear Spin-On contaminant collection bowls and self-venting drains.

Fits:

- **Ford**
- **Perkins**
- **Massey**
- **Saab**
- **Volvo-Penta**
- **Ford Lehman engines, up to 70 HP.**

PFCAV Adapter Kit includes numbers 1, 2, 3, 5, 6, 7, and 8. Number 4 is the CAV mounting head and number 9 is a Racor B32016 filter assembly.

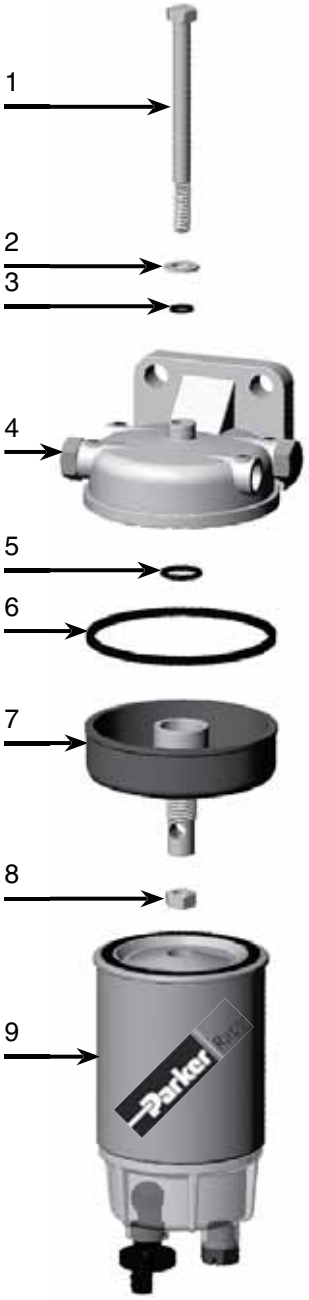

Questions? Contact Technical Support:
800 344 3286 or 209 521 7860 ext. 7555
e-mail: racortech@parker.com

ParFit™ Products

PFF829B

Specifications	PF F829B
Application	Navistar 7.3L Diesel Engines in Ford E & F Series Vehicles
Maximum Flow Rate	20 GPH (75.7 LPH)
Maximum Working Pressure	30 PSI (2.1 bar)
Element Part Number	PFF829B (2 micron)
Height (with metal bowl)	5.5 in. (14 cm)
Diameter	4.3 in. (11.0 cm)
Center Threads	1-14 UNS
Solids Capacity	12.3 oz (350 g)
Weight (dry)	1.2 lb (0.5 kg)
H_2O Removal Efficiency	99%
Operating Temperature	-50° to +225°F (-45° to +107°C)

Cross Reference

Fleet Guard	Wix	Luber Finer	Baldwin	Donaldson	Fram
FS1278 FS1281	33217 33217MP	LFF5824 LFF5824B	BF1222 BF1222SP	P553375	PS6554 PS6554A

ParFit™ Products

Replacement Parts

PFF829B

	Part Number	Description
1.	**RK 22061**	Element Gasket Kit
2.	**PF F829B**	Replacement Element (includes #'s 1 & 3)
3.	**N/A**	Bowl O-ring Kit
4.	**PFRK20567**	Metal Bowl Kit (includes #'s 3 , 4 & 5)
5.	**20301**	Water Probe
6.	**IN RK21057**	Optional Clear Bowl Kit (includes #'s 3, 5, 6 & 7)
7.	**RK 30476**	Self-venting Drain Kit

Questions? Contact Technical Support:
800 344 3286 or 209 521 7860 ext. 7555
e-mail: racortech@parker.com

ParFit™ Products

PFF830

Specifications	PFF830
Application	Navistar 7.3L medium duty trucks & buses with diesel engines.
Maximum Flow Rate	30 GPH (114 LPH)
Maximum Working Pressure	30 PSI (2.1 bar)
Micron Rating	40 micron
Height: (with bowl) (without bowl)	 6.0 in. (15.2 cm) 5.25 in. (13.3 cm)
Diameter	4.3 in. (11.0 cm)
Center Threads	1-14 UNS
Solids Capacity	13.9 oz (395 g)
Weight (dry)	1.2 lb (0.5 kg)
H_2O Removal Efficiency	99%
Operating Temperature	-50° to +225°F (-45° to +107°C)

Cross Reference

Fleet Guard	Wix	Luber Finer	Baldwin	Donaldson	Fram
FS1291 FS19547 FS79551	33232 33411	LFF3579 LFF1223 LFF3290 LFF3292	BF1345 BF1345SP BF1223 BF1329 BF1348, BF1349	P550729	PS8186 PS7713 PS7170

ParFit™ Products

Replacement Parts

PFF830

	Part Number	Description
1.	**N/A**	Element Gasket
2.	**IN F830**	Replacement Element (includes #'s 1, 2 & 3)
3.	**RK 21156**	Bowl O-ring
4.	**PFRK20567**	Optional Metal Bowl Kit (includes #'s 3, 4 & 5)
5.	**20301**	Water Probe
6.	**IN RK21057**	Optional Clear Bowl Kit (includes #'s 3, 5, 6 & 7)
7.	**RK 30476**	Self-venting Drain Kit

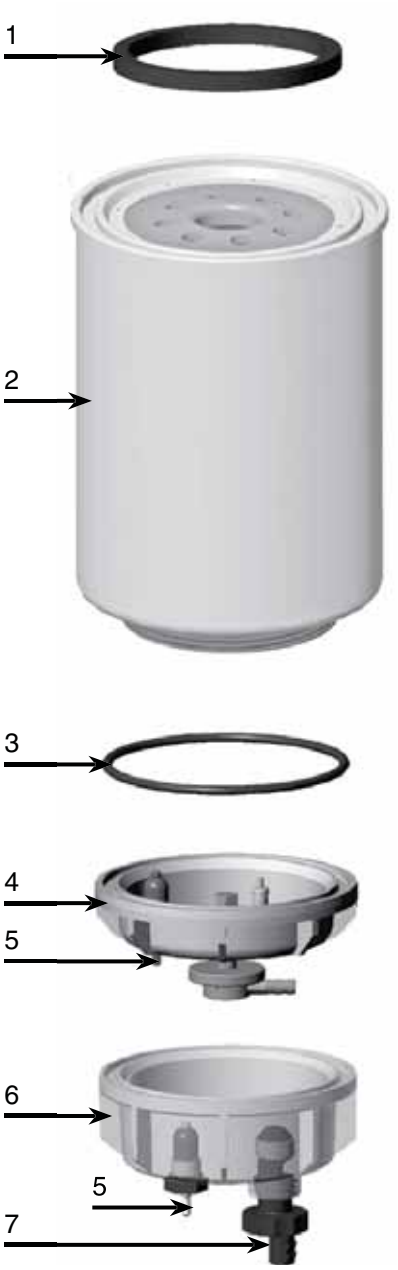

Questions? Contact Technical Support:
800 344 3286 or 209 521 7860 ext. 7555
e-mail: racortech@parker.com

ParFit™ Products

PF F831

Specifications	PF F831
Application	Navistar 6400 Series with diesel engines
Maximum Flow Rate	30 GPH (114 LPH)
Maximum Working Pressure	30 PSI (2.1 bar)
Micron Rating	40 micron
Height: (with bowl) (without bowl)	 5.5 in. (14 cm) 4.0 in. (10.2 cm)
Diameter	4.3 in. (11.0 cm)
Center Threads	1-14 UNS
Solids Capacity	13.9 oz (395 g)
Weight (dry)	1.2 lb (0.5 kg)
H_2O Removal Efficiency	99%
Operating Temperature	-50° to +225°F (-45° to +107°C)

Cross Reference

Fleet Guard	Wix	Luber Finer	Baldwin	Donaldson	Fram
FS1287 FS19532 FS19551	33231 33411	LFF3345 LFF5766 LFF8038 LFF8063 LFF8957	BF1223 BF1223SP	P550730	PS7716 PS8187 PS8486

ParFit™ Products

Replacement Parts

PF F831

	Part Number	Description
1.	**N/A**	Element Gasket
2.	**PF F831**	Replacement Element (includes #'s 1, 2 & 3)
3.	**RK 21156**	Bowl O-ring
4.	**PFRK20567**	Optional Metal Bowl Kit (includes #'s 3, 4 & 5)
5.	**20301**	Water Probe
6.	**IN RK21057**	Optional Clear Bowl Kit (includes #'s 3, 5, 6 & 7)
7.	**RK 30476**	Self-venting Drain Kit

Questions? Contact Technical Support:
800 344 3286 or 209 521 7860 ext. 7555
e-mail: racortech@parker.com

ParFit™ Products

Fuel Dispensing Elements Overview

Specifications	PFFDW3525	PFFDW3825	PFFDW51125
Maximum Flow Rate	450 GPH (1703 LPH)	900 GPH (3406 LPH)	3000 GPH (11356 LPH)
Max. Working Pressure	100 PSI (689.6 kPa)	100 PSI (689.6 kPa)	100 PSI (689.6 kPa)
Micron Rating	25	25	25
Height	5.0 in. (12.7 cm)	8.0 in. (20.3 cm)	11.0 in. (27.9 cm)
Diameter	4.0 in. (10.2 cm)	4.0 in. (10.2 cm)	5.0 in. (12.7 cm)
Center Threads	1”-12	1”-12	1.5”-16
Solids Capacity	0.5 oz. (15.6 g)	1.0 oz. (28.7 g)	2.0 oz (56.5 g)
Water Capacity	8.4 oz. (0.2 L)	15.4 oz. (0.5 L)	30.3 oz (0.9 L)
Weight (dry)	1.2 lb (0.5 kg)	1.5 lb (0.7 kg)	2.8 lb (1.3 kg)
H_2O Removal Efficiency	99%		
Operating Temperature	-50° to +225°F (-45° to +107°C)		

Questions? Contact Technical Support:
800 344 3286 or 209 521 7860 ext. 7555
e-mail: racortech@parker.com

Parker Racor

ParFit™ Products

Optional Mounting Heads

Specifications	PFHH07500	PFFDH12500	23179001**
Maximum Flow Rate	900 GPH (3,406 LPH)	3000 GPH (11,356 LPH)	6000 GPH (22,712 LPH)
Fuel Ports	0.75” NPT	1.25” NPT	1.5” NPT
Height	2.5 in. (6.4 cm)	3.5 in. (8.9 cm)	4.5 in. (11.4 cm)
Length	3.8 in. (9.7 cm)	5.3 in (13.5 cm)	11.3 in. (28.7 cm)
Width	3.0 in. (7.6 cm)	5.3 in. (13.5 cm)	5.5 in. (14.0 cm)
Weight	0.7 lb (0.3 kg)	1.3 lb (0.6 kg)	6.0 lb (2.7 kg)
Gasket Pack (5 pc)	N/A	INGCSG100	INGCSG100
Operating Pressure	100 PSI (6.9 bar)	100 PSI (6.9 bar)	100 PSI (6.9 bar)

**23179001 dual head. Please call Parker's Hydraulic Filter Division to order (419.644.4311).

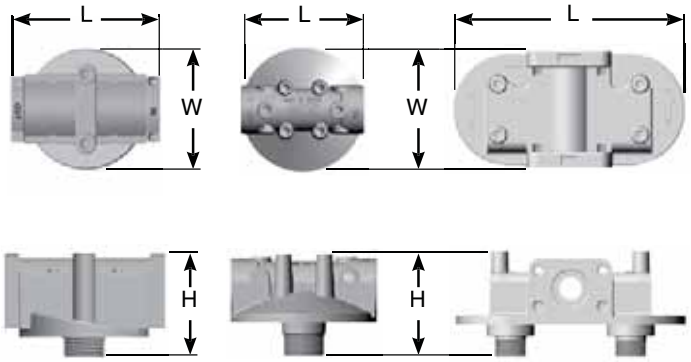

ParFit™ Products

PFF19528

Specifications	IN F19528
Application	1998 & 1999 Dodge Trucks w/Cummins Diesel Engines
Maximum Working Pressure	30 PSI (2.1 bar)
Micron Rating	2 micron
Height	4.4 in. (11.2 cm)
Diameter	3.6 in. (9.1 cm)
Solids Capacity	5.1 oz (144 g)
Weight (dry)	0.4 lb (0.2 kg)
H_2O Removal Efficiency	99%
Operating Temperature	-50° to +225°F (-45° to +107°C)

Cross Reference

Fleet Guard	Wix	Luber Finer	Baldwin	Donaldson	Fram
FS19522 FS19528	33349	L5021F	PF7610 PF7651 PF7751	P551310	CS8323

ParFit™ Products

Replacement Parts

PFF19528

	Part Number	Description
1.	**N/A**	Element O-ring
2.	**N/A**	Housing Gasket
3.	**PFF19528**	Replacement Element (includes #'s 1 & 2)
	Additional Parts (not shown)	
	54039	Gasket Pack (includes #'s 1 & 2)

Questions? Contact Technical Support:
800 344 3286 or 209 521 7860 ext. 7555
e-mail: racortech@parker.com

ParFit™ Products

PFF32423

Specifications	PFF32423
Application	International DT466, DT570 and HT570 Engines
Cross References	Navistar: 1822588C1 Fleetguard: FFO526904
Maximum Flow Rate	45 GPH (173 LPH)
Working Pressure	60 PSI (4.1 bar)
Micron Rating	2 micron
Height	7.5 in. (19.1 cm)
Diameter	4.4 in. (11.2 cm)
Solids Capacity	14.1 oz (400 g)
Weight (dry)	1.5 lb (0.7 kg)
H_2O Removal Efficiency	99%
Operating Temperature	-50° to +225°F (-45° to +107°C)

ParFit™ Products

Replacement Parts

PFF32423

	Part Number	Description
1.	**RK 10503**	Element Gasket
2.	**PFF32423**	Replacement Element (includes #'s 1, 2, 3 & 4)
3.	**RK 11340**	Drain O-ring Kit
4.	**RK 30488**	Drain Kit (includes #3)

Questions? Contact Technical Support:
800 344 3286 or 209 521 7860 ext. 7555
e-mail: racortech@parker.com

ParFit™ Products

PFF4595

Specifications	IN F4595
Application	7.3L Navistar T444E Powerstroke: 1994 - 1999
Micron Rating	2 micron
Maximum Flow Rate	20 GPH (76 LPH)
Height	4.0 in. (10.2 cm)
Diameter	3.5 in. (8.9 cm)
Weight (dry)	0.4 lb (5.8 oz.)
Solids Capacity	12.3 oz (350 g)
Lid Gasket Part Number	31226
H_2O Removal Efficiency	99%
Operating Temperature	-50° to +225°F (-45° to +107°C)

Cross Reference

Fleet Guard	Wix	Luber Finer	Baldwin	Donaldson	Fram	Motorcraft
FS1298	33517	L3508F	PF7578 PF7678	P550966	CS8323	FD4595

ParFit™ Products

Replacement Parts

PFF4595

	Part Number	Description
1.	**RK 31449**	Filter Cap Kit
2.	**31025**	Gasket
3.	**PFF4595**	Element

Questions? Contact Technical Support:
800 344 3286 or 209 521 7860 ext. 7555
e-mail: racortech@parker.com

ParFit™ Products

PFF4596

Specifications	PFF4596
Application	7.3L Navistar T444E Powerstroke: 1999 - current
Maximum Flow Rate	20 GPH (76 LPH)
Maximum Working Pressure	30 PSI (2.1 bar)
Micron Rating	7 micron
Height	2.8 in. (7.1 cm)
Diameter	3.6 in. (9.1 cm)
Solids Capacity	12.3 oz (350 g)
Weight (dry)	0.3 lb (0.1 kg)
H_2O Removal Efficiency	99%
Operating Temperature	-50° to +225°F (-45° to +107°C)

Cross Reference

Fleet Guard	Wix	Luber Finer	Baldwin	Donaldson	Fram	Motorcraft
FF5418	33518	L4596F L5788F	PF7698	P550437	CS8629	FD4596

ParFit™ Products

Replacement Parts

PFF4596

	Part Number	Description
1.	**31025**	Element Gasket
2.	**PFF4596**	Replacement Element (includes #'s 1 and 3)
3.	**20151-B**	Element O-ring

Additional Parts (not shown

31749	Gasket Pack

ParFit™ Products

PFF4604

(includes both elements)

Specifications	Secondary Fuel Filter	Primary Fuel Filter
Application	Ford 6.0L Powerstroke Engines. Model Years 2003 to 2006	
Maximum Flow Rate	34 GPH (130 LPH)	34 GPH (130 LPH)
Maximum Working Pressure	58 PSI (4.0 bar)	58 PSI (4.0 bar)
Micron Rating	4 micron	10 micron
Height	2.6 in. (6.6 cm)	4.4 in. (11.2 cm)
Diameter	2.3 in. (5.8 cm)	3.4 in. (8.6 cm)
Weight (dry)	0.1 lb (0.05 kg)	0.3 lb (0.1 kg)
Solids Capacity (with both filters)	0.2 oz (5.7 g)	
Gasket Pack	21746	
H_2O Removal Efficiency	99%	
Operating Temperature	-50° to +225°F (-45° to +107°C)	

Cross Reference

Fleet Guard	Wix	Luber Finer	Baldwin	Donaldson	Motorcraft
N/A	33599	N/A	PF7812KIT	P550527	FD4604

ParFit™ Products

PFF4606

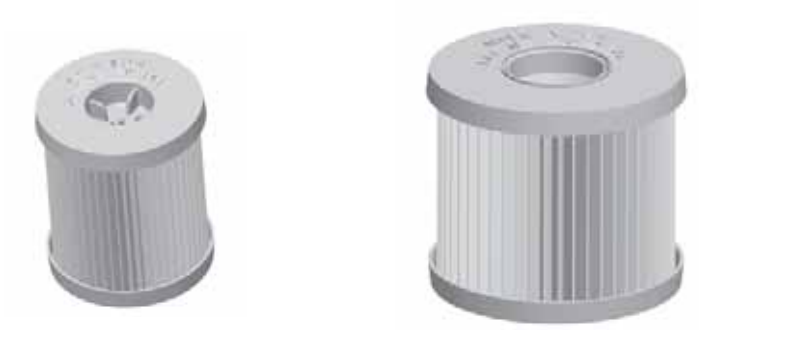

(includes both elements)

Specifications	Secondary Fuel Filter	Primary Fuel Filter
Application	Ford 6.0L Powerstroke Engines. Model Years 2003 to 2006	
Micron Rating	4 Micron	10 Micron
Height	2.5 in. (6.4 cm)	3.1 in. (7.9 cm)
Diameter	2.3 in. (5.8 cm)	3.7 in. (9.4 cm)
Weight (dry)	1.8 oz	4.6 oz
Gasket Pack	Included	
Filter Life	15,000 miles	
H_2O Removal Efficiency	99%	
Operating Temperature	-40° to +250°F (-40° to +121°C)	

Cross Reference

Amsoil	Wix	Honeywell	Baldwin	Napa	Carquest	Hastings	Champion Lab
FFK60	33600	CS98153	168153	3600	86600	FF1158	L4606F

Questions? Contact Technical Support:
800 344 3286 or 209 521 7860 ext. 7555
e-mail: racortech@parker.com

ParFit™ Products

PFFRK51216

Specifications	PFFRK51216
Application	Pre-Filter
Maximum Flow Rate	N/A
Maximum Working Pressure	N/A
Micron Rating	200-260
Height	4.4 in. (11.2 cm)
Diameter	1.9 in. (4.8 cm)
Weight (dry)	N/A
Solids Capacity	N/A
Gasket Pack	RK51218
Water Removal Efficiency	99%
Operating Temperature	-50° to +225°F (-45° to +107°C)

ParFit™ Products

Replacement Parts

Replacement Parts

	Part Number	Description
1.	N/A	O-ring Kit
2.	**RK 51216**	Prescreen Element Kit

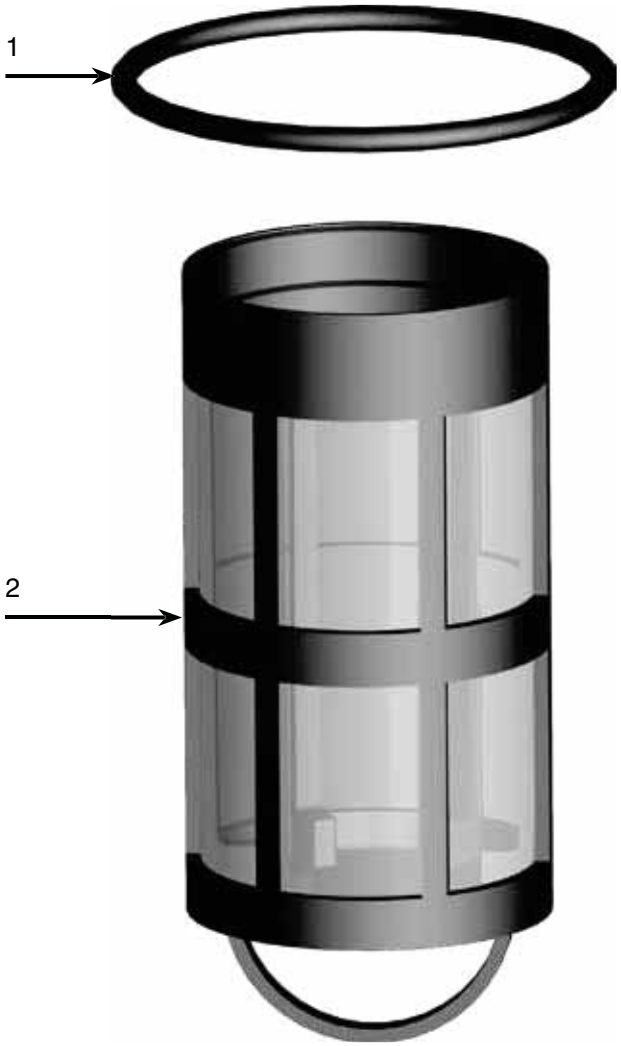

Questions? Contact Technical Support:
800 344 3286 or 209 521 7860 ext. 7555
e-mail: racortech@parker.com

ParFit™ Products

PFF5500

Specifications	PFF5500
Application	Detroit Diesel (secondary filter)
Max. Working Pressure	60 PSI (4.1 bar)
Micron Rating (98% nominal)	10 micron
Height	6.9 in. (17.4 cm)
Diameter	3.8 in. (9.5 cm)
Center Threads	13/16-12 UNS 2B
Weight (dry)	1.5 lb (0.7 kg)
H_2O Removal Efficiency	99%
Operating Temperature	-50° to +225°F (-45° to +107°C)

Cross Reference

Fleet Guard	Wix	Luber Finer	Baldwin	Donaldson	Fram	Detroit	AC
FF5206 FF206 FF5227	33120	LFP816FN LFF3291 LFP816F LFP816FN	BF5810 BF581 BF5815 BF7612 BF7640	P556916 P169091	P1147G PS8479 P3823	23518530	TP916D

ParFit™ Products

PFF5501

Specifications	PFF5501
Application	Caterpillar (primary filter)
Max. Working Pressure	60 PSI (4.1 bar)
Micron Rating (98% nominal)	10 micron
Height	10.2 in. (25.8 cm)
Diameter	4.3 in. (11.0 cm)
Center Threads	1-14 UNS-2B
Weight (dry)	2.4 lb (1.1 kg)
H_2O Removal Efficiency	99%
Operating Temperature	-50° to +225°F (-45° to +107°C)

Cross Reference

Fleet Guard	Wix	Luber Finer	Baldwin	Donaldson	Fram	Caterpillar
FF211	33384	LFF5823 LFP5823	BF584 BF584B	P555823 EFF9092 EFF9092S FFP170823 FFP555823	P3376	4N-5823

Questions? Contact Technical Support:
800 344 3286 or 209 521 7860 ext. 7555
e-mail: racortech@parker.com

ParFit™ Products

PFF5502

Specifications	PFF5502
Application	Cummins, Freightliner
Max. Working Pressure	60 PSI (4.1 bar)
Micron Rating (98% nominal)	5 micron
Height	9.7 in. (24.6 cm)
Diameter	3.7 in. (9.4 cm)
Center Threads	1-14 UNS-2B
Weight (dry)	1.6 lb (0.7 kg)
H_2O Removal Efficiency	99%
Operating Temperature	-50° to +225°F (-45° to +107°C)

Cross Reference

Fleet Guard	Wix	Luber Finer	Baldwin	Donaldson	Fram
FS1000 FS1212 FS1009	33406 33405	LFF1000 LFF5D LFF8000 LFF8011 LFF8020	BF1259 BF1212 BF1282 BF957D	P551000 P170212 P550691 P558000 P558020	PS8048 PCS5059 PCS5059M PCS5062 PS3712

ParFit™ Products

PFF5503

Specifications	PFF5503
Application	Detroit Diesel (primary filter)
Max. Working Pressure	60 PSI (4.1 bar)
Micron Rating (98% nominal)	30 micron
Height	8.2 in. (20.8 cm)
Diameter	3.8 in. (9.7 cm)
Center Threads	1-12 UNS-2B
Weight (dry)	1.5 lb (0.7 kg)
H_2O Removal Efficiency	99%
Operating Temperature	-50° to +225°F (-45° to +107°C)

Cross Reference

Fleet Guard	Wix	Luber Finer	Baldwin	Donaldson	Fram	Detroit	AC
FF5207 FF207	33118	LFP815F LFP815FN	BF580 BF5800	P556915 P550915 FFP170915 FFP550915	P1146 P1146G	23517471	T915D

Questions? Contact Technical Support:
800 344 3286 or 209 521 7860 ext. 7555
e-mail: racortech@parker.com

ParFit™ Products

PFF5504

Specifications	PFF5504
Center Threads	M16 X 1.5
Maximum Flow Rate	GPH (LPH)
Maximum Working Pressure	30 PSI (2.1 bar)
Micron Rating	10 micron
Height	4 in. (10 cm)
Diameter	3.3 in. (8.3 cm)
Solids Capacity	12.3 oz (350 g)
Weight (dry)	1.0 lb (0.5 kg)
H_2O Removal Efficiency	99%
Operating Temperature	-50° to +225°F (-45° to +107°C)

Cross Reference

Fleet Guard	Wix	Luber Finer	Baldwin	Donaldson	Fram
FF5095	33195	LFF3806	BF790	P555095	P6503

ParFit™ Products

PFF5505

Specifications	PFF5505
Center Threads	M16 x 1.5
Maximum Flow Rate	GPH (LPH)
Maximum Working Pressure	30 PSI (2.1 bar)
Micron Rating	10 micron
Height	4.9 in. (12.3 cm)
Diameter	3.3 in. (8.3 cm)
Solids Capacity	12.3 oz (350 g)
Weight (dry)	1.0 lb (0.5 kg)
H_2O Removal Efficiency	99%
Operating Temperature	-50° to +225°F (-45° to +107°C)

Cross Reference

Fleet Guard	Wix	Luber Finer	Baldwin	Donaldson	Fram
FF5018 FF231 FF5046 FF50502 FF5074 FF5167 FF5494	33358	FP586F G6353 LFF3521 LFF3506	BF7689 BF788 BF900 BF983 BF988 BF993	P550272 P550440 P554620 FFP550440 FFP553004	P7513 P4102 P4102A

Questions? Contact Technical Support:
800 344 3286 or 209 521 7860 ext. 7555
e-mail: racortech@parker.com

ParFit™ Products

PFF5509

Specifications	PFF5509
Application	Cummins, Ford, GM, Dodge, Kenworth and Hino Trucks (secondary filter)
Max. Working Pressure	60 PSI (4.1 bar)
Micron Rating (98% nominal)	7 micron
Height	5.3 in. (13.5 cm)
Diameter	3.7 in. (9.4 cm)
Center Threads	1-14 UNS-2B
Weight (dry)	1.2 lb (0.5 kg)
H_2O Removal Efficiency	99%
Operating Temperature	-50° to +225°F (-45° to +107°C)

Cross Reference

Fleet Guard	Wix	Luber Finer	Baldwin	Donaldson	Fram	Cummins
FF105	33109	LFF5 LFF8012	BF957 BF5801 BF957B	P550105 P550106 FFP170105 FFP550105 FFP550106 P16909	P3528 P3538A P1101	154709

ParFit™ Products

PFF5525

Specifications	PFF5525
Application	Hydraulic Spin-On
Max. Working Pressure	100 PSI (6.9 bar)
Micron Rating (98% nominal)	25 micron
Height	8.8 in. (22.4 cm)
Diameter	3.8 in. (9.7 cm)
Center Threads	1-12 UNF - 2b
Weight (dry)	1.9 lb (0.9 kg)
H_2O Removal Efficiency	99%
Operating Temperature	-50° to +225°F (-45° to +107°C)

PFF5527

Specifications	PFF5527
Application	Ford F550, F650 Trucks
Maximum Flow Rate	30 GPH (114 LPH)
Maximum Working Pressure	40 PSI (2.8 bar)
Micron Rating	30 micron
Height	4.0 in. (10.2 cm)
Diameter	3.6 in. (9.1 cm)
Center Threads	1”-14 UNS-2A
Solids Capacity	10.0 oz (277 g)
Weight (dry)	0.7 lb (0.3 kg)
H_2O Removal Efficiency	99%
Operating Temperature	-50° to +225°F (-45° to +107°C)

Cross Reference

Fleet Guard	Wix	Luber Finer	Baldwin	Donaldson	Fram
N/A	33736	L4597F	N/A	N/A	PS91110

Questions? Contact Technical Support:
800 344 3286 or 209 521 7860 ext. 7555
e-mail: racortech@parker.com

ParFit™ Products

Replacement Parts

PFF5527

	Part Number	Description
1.	**N/A**	Element Gasket
2.	**PFF5527**	Replacement Element (includes #'s 1, 2 & 3)
3.	**20707**	O-ring Kit (includes #'s 1 & 3)
4.	**RK22350-02**	Replacement Bowl

ParFit™ Products

PFF558095

PFF5548

Fuel Filter

Specifications	PFF5548
Application	International MaxxForce 9 model year 2007 I-326 engine
Maximum Flow Rate	50 GPH (189 LPH)
Maximum Working Pressure	30 PSI (206 kPa)
Micron Rating	2 Micron Aquabloc
Height	5.0 in. (12.7 cm)
Diameter	3.2 in. (8.1 cm)
Center Threads	N/A
Solids Capacity	N/A
Weight (dry)	3.4 oz (0.1 kg)
H_2O Removal Efficiency	95%
Operating Temperature	-50° to +225°F (-45° to +107°C)

Questions? Contact Technical Support:
800 344 3286 or 209 521 7860 ext. 7555
e-mail: racortech@parker.com

Par Fit™ Products

PFF5550

(includes both elements)

Specifications	Secondary Fuel Filter	Primary Fuel Filter
Application	Primary and Secondary Parfit Fuel Filter Replacement Elements for the Ford Power Stroke® Model Year 2007 Engine. **(FD-4609)**	
Maximum Flow Rate		
Maximum Working Pressure		
Micron Rating		
Height		
Diameter		
Weight (dry)		
Solids Capacity (with both filters)		
Gasket Pack	Included	
H_2O Removal Efficiency	99%	
Operating Temperature	-50° to +225°F (-45° to +107°C)	

ParFit™ Products

PFF5556

Specifications	PFF5556
Application	Itech 1-6 Prescreen kit
Maximum Flow Rate	N/A
Maximum Working Pressure	N/A
Micron Rating	200-260
Height	4.4 in. (11.2 cm)
Diameter	1.9 in. (4.8 cm)
Center Threads	N/A
Solids Capacity	N/A
Replacement Gasket	RK51218
H_2O Removal Efficiency	Screen
Operating Temperature	-50° to +225°F (-45° to +107°C)

Questions? Contact Technical Support:
800 344 3286 or 209 521 7860 ext. 7555
e-mail: racortech@parker.com

ParFit™ Products

PFF558095

Fuel Filter

(includes both elements)

Specifications	Secondary Fuel Filter	Primary Fuel Filter
Application	Fuel Filter/Water Separator Kit For GM610 Van	
Maximum Flow Rate	34 GPH (130 LPH)	34 GPH (130 LPH)
Maximum Working Pressure	58 PSI (4.0 bar)	58 PSI (4.0 bar)
Micron Rating	4 micron	10 micron
Height	2.6 in. (6.6 cm)	4.4 in. (11.2 cm)
Diameter	2.3 in. (5.8 cm)	3.4 in. (8.6 cm)
Weight (dry)	0.1 lb (0.05 kg)	0.3 lb (0.1 kg)
Solids Capacity (with both filters)	0.2 oz (5.7 g)	
Gasket Pack	Included	
H_2O Removal Efficiency	99%	
Operating Temperature	-50° to +225°F (-45° to +107°C)	

Cross Reference

Fleet Guard	Wix	Luber Finer	Baldwin	Donaldson	Motorcraft
N/A	33599	N/A	PF7812KIT	P550527	FD4604

ParFit™ Products

PFF32715

(includes both elements)

Specifications	Primary Fuel Filter	Secondary Fuel Filter
Application	Parfi t V8 Primary and Final Fuel Element Service Kit with seals	
Micron Rating	4 Micron	10 Micron
Height	2.5 in. (6.4 cm)	3.1 in. (7.9 cm)
Diameter	2.3 in. (5.8 cm)	3.7 in. (9.4 cm)
Weight (dry)	1.8 oz	4.6 oz
Gasket Pack	Included	
Filter Life	15,000 miles	
H_2O Removal Efficiency	99%	
Operating Temperature	-40° to +250°F (-40° to +121°C)	

Questions? Contact Technical Support:
800 344 3286 or 209 521 7860 ext. 7555
e-mail: racortech@parker.com

ParFit™ Products

PFFG01 Filter Glove

Application

The Racor Filter Glove fits most marine and auto filters. The Filter Glove fits conveniently onto the bottom of Spin-On filters.

Product

The Racor Filter Glove is made with a durable, soft poly-blend material that is not effected by fuel, oil, heat or cold. The Filter Glove allows for easy cleaning and reusing every time you service a filter or element.

How It Works

Push the Filter Glove firmly on to most filters (3” to 4” in diameter). The Filter Glove is designed with 10 tapered fingers to allow that the Filter Glove fits snuggly on the filter. Unscrew the filter or element (a bowl or strap wrench might be needed). When the filter is broken loose, the oil or fuel will leak down the sides and will be caught in the bottom of the Filter Glove. This process will help you avoid mess in bilges, driveways and help protect our environment.

PFFG01 Filter Glove

ParFit™ Products

Interceptor to Parfit Cross Reference Guide

Navistar 6.9l Complete Replacement Fuel Filters

Interceptor Part Number	ParFit Part Number	Description
IN BF811 (Obsolete)	**PF BF811**	Replaces standard fuel filter on 6.9L diesel in Ford E & F Series vehicles
IN F811 (Obsolete)	**PF F811**	Replacement Fuel Filter for above.
IN RK30785 (Obsolete)	N/A	Water Sensor Kit for PF BF811 applications. Replaces the OEM water sensor

Navistar 6.9l Complete Replacement Assemblies

Interceptor Part Number	ParFit Part Number	Description
IN RK30787 (Obsolete)	N/A	Navistar 6.9L Replacement Kit for Ford F Series trucks (uses IN F829B filter)
IN RK30801 (Obsolete)	N/A	Navistar 6.9L Replacement Kit for Ford E Series vans (uses IN F829B filter)
IN RK20567 (Obsolete)	**PFRK20567**	Replacement Metal Bowl Kit for IN F811 (PF F811, IN F829B (PF F829B), IN F830 and IN F831 (PF F831)
IN RK21057	N/A	Replacement Clear Bowl Kit for IN F811 (PF F811, IN F829B (PF F829B), IN F830 and IN F831 (PF F831)

Replacement Filters For OEM Applications

Interceptor Part Number	ParFit Part Number	Description
IN F829B (Obsolete)	**PF F829B**	Navistar 7.3L diesel in Ford E & F Series vehicles, 2 micron
IN F830	N/A	Navistar 7.3L medium-duty trucks and buses, 40 micron
IN F831 (Obsolete)	**PF F831**	Navistar 6400 Series fuel heater/filter/water separators, 40 micron
IN F4595	N/A	Navistar T444E (7.3L) Powerstroke (model 1994 to 1999)
IN F4596 (Obsolete)	**PFF4596**	Navistar T444E (7.3L) Powerstroke (model 1999 to current)
IN F4597 (Obsolete)	N/A	Ford 550 and 650 with Cat engines and cold weather element
IN F19528	N/A	Dodge trucks with a Cummins engine, replacement element (model 1998 & 1999)
IN F296 (Obsolete)	N/A	CAV: Replaces CAV7111/296
IN F796	N/A	IN F796 CAV: Replaces CAV7111/796
IN F3368 (Obsolete)	**PF F3368**	Ford 6.6L/7.8L engines, 1991 to 1992
IN FR26P Obsolete	N/A	Ford 6.6L/7.8L engines, 1985 to 1990
IN F18786 Obsolete	N/A	Replaces Stanadyne Fuel Filter No.18667 (square, box-type)
IN F19797 Obsolete	N/A	Replaces Stanadyne Fuel/Water Separator No.19856 (square, box-type)
IN F52525 Obsolete	N/A	Replaces Webb #52525 / DDC Applications

Questions? Contact Technical Support:
800 344 3286 or 209 521 7860 ext. 7555
e-mail: racortech@parker.com

ParFit™ Products

Interceptor to Parfit Cross Reference Guide

Replacement Filters for Dahl

Interceptor Part Number	ParFit Part Number	Description
IN 101-2 (Obsolete)	**PF101-2**	100, 2 Micron
IN 101-10 (Obsolete)	**PF101-10**	100, 10 Micron
IN 101-30 (Obsolete)	**PF101-30**	100, 30 Micron
IN 201-2 (Obsolete)	**PF201-2**	200, 2 Micron
IN 201-10 (Obsolete)	**PF201-10**	200, 10 Micron
IN 201-30 (Obsolete)	**PF201-30**	200, 30 Micron
IN 301-10 (Obsolete)	**PF301-10**	300, 10 Micron
IN 301-30 (Obsolete)	**PF301-30**	300, 30 Micron

Transmission Filters For Allison Automatic Transmissions

Interceptor Part Number	ParFit Part Number	Replaces	Description	Application
IN TA2062	N/A	DDA 23042062 and Pall 1309836	Spin-On Filter, 6 micron microglass media (1 1/2”-16 threads)	School bus, and refuse collection vehicles
IN TA60075Q (Obsolete)	N/A	Allison # 23018853	Cartridge Filter	N/A
IN TA60076Q (Obsolete)	N/A	Allison # 23049373	Cartridge Filter	N/A
IN TA6898 (Obsolete)	N/A	Allison # 29526898	Cartridge Filter	World Transmission
IN TA6899 (Obsolete)	N/A	Allison # 29526899	Cartridge Filter	World Transmission
IN HF60058 (Obsolete)	N/A	DDA 23049373 and Pall 13112668	Cartridge Filter	Construction, mining logging and other off-road vehicles
IN HF60074 (Obsolete)	**PFHF60074**	DDA 23040988 and Pall HC8200SDN8Z	Cartridge Filter	Transit bus and refuse vehicles

Water Absorbing Filters

Interceptor Part Number	ParFit Part Number	Micron Rating	Center Thread	Diameter	Length	Media Area Sq in. (Sq cm)	Solids Capacity	Water Capacity	Maxumum Operating Pressur
IN FDC3510G (Obsolete)	N/A	10	1.5”-16	3.8 in (9.7 cm)	5.0 in. (12.7 cm)	480 / 3096	0.3 oz (9.04 g)	N/A	100 PSI (689.6 kPa)
IN FDC3530G (Obsolete)	N/A	30	1.5”-16	3.8 in (9.7 cm)	5.0 in. (12.7 cm)	480 / 3096	0.3 oz (9.04 g)	N/A	100 PSI (689.6 kPa)
IN FDW3510 (Obsolete)	N/A	10	1”-12	3.8 in (9.7 cm)	5.0 in. (12.7 cm)	190 / 1226	0.5 oz (13.7 g)	8.4 oz (247 ml)	100 PSI (689.6 kPa)
IN FDW3510A (Obsolete)	N/A	10	1”-12	3.8 in (9.7 cm)	5.0 in. (12.7 cm)	335 / 2161	(0.5 oz (13.7 g)	5.9 oz (175 ml)	100 PSI (689.6 kPa)
IN FDW3525 (Obsolete)	**PFFDW3525**	25	1”-12	3.8 in. (9.7 cm)	5.0 in. (12.7 cm)	190 / 1226	0.6 oz (15.6 g)	8.4 oz (247 ml)	100 PSI (689.6 kPa)

Questions? Contact Technical Support:
800 344 3286 or 209 521 7860 ext. 7555
e-mail: racortech@parker.com

Parker Racor

ParFit™ Products

Interceptor to Parfit Cross Reference Guide

Water Absorbing Filters

Interceptor Part Number	ParFit Part Number	Micron Rating	Center Thread	Diameter	Length	Media Area Sq in. (Sq cm)	Solids Capacity	Water Capacity	Maxumum Operating Pressur
IN FDW3810A (Obsolete)	N/A	10	1”-12	3.8 in. (9.7 cm)	5.0 in. (12.7 cm)	608 / 3920	1.4 oz (39.5 g)	10.7 oz (315 ml)	100 PSI (689.6 kPa)
IN FDW3825 (Obsolete)	N/A	25	1”-12	3.8 in. (9.7 cm)	8.0 in. (20.3 cm)	350 / 2258	1.0 oz (28.7 g)	15.4 oz (455 ml)	100 PSI (689.6 kPa)
IN FDW3830 (Obsolete)	N/A	30	1”-12	3.8 in. (9.7 cm)	8.0 in. (20.3 cm)	350 / 2258	1.0 oz (28.7 g)	15.4 oz (455 ml)	100 PSI (689.6 kPa)
IN FDW51125 (Obsolete)	**PFFDW51125**	25	1.5”-16	5.0 in. (12.7 cm)	11.0 in. (27.9 cm)	689 /4444	2.0 oz (56.5 g)	30.3 oz (896 ml)	100 PSI (689.6 kPa)

Filter Heads

Interceptor Part Number	ParFit Part Number	Center Thread	Port Size	Fuel Flow Rate	Filter Application	Bypass Setting	Restriction Gauge	Gauge Port
IN HH07500 (Obsolete)	**PFHH07500**	1”-12	3/4” NPT	15.0 GPM (56.8 LPM)	FDW3525 FDW3825	No	Optional	1/8” NPT
IN FDH12500 (Obsolete)	**PFFDH12500**	1.5”-16	1.25” NPT	50.0 GPM (189.3 LPM)	FDW51125	No	Optional	1/8” NPT
IN FDH125DD	N/A	1.5”-16	1.5” NPT	100.0 GPM (378.5 LPM)	FDW51125 (2)	No	Optional	1/8” NPT

CAV Filter Adapter Kit

Interceptor Part Number	ParFit Part Number	Description	Application
IN CAV	N/A	Adaptor Kit	Ford, Perkins, Massey, Saab, Volvo-Penta, and Ford Lehman

Filter Adapter Kit IN CAV turns old C.A.V. Filter Head, cannister and glass bowl units into a spin--on filter. Fits Ford, Perkins, Massey Ferguson, Saab, Volvo--Penta and more! This kit allows the use of Interceptor Spin--On Filters that feature the patented see--thru, spin--on contaminant collection bowl: IN B32008 or IN B32016. For engines up to 70 HP.

Questions? Contact Technical Support:
800 344 3286 or 209 521 7860 ext. 7555
e-mail: racortech@parker.com

ParFit™ Products

Interceptor to Parfit Cross Reference Guide

Hydraulic Filters - Low Pressure

Interceptor Hydraulic Water Absorbing Filter elements feature a specially-designed media which absorbs damaging water. By also trapping solid contamination, like dirt and rust, the media protects precision hydraulic components from abrasion. As the element fills with water and plugging occurs, fluid flow slows and the filter head will go into a by-pass mode. Interceptor Spin-On filters are available for virtually all applications and can be specified in 10 and 25micron nominal ratings (3micron is available upon request). They are engineered and manufactured under the most up-to-date quality control processes to meet or exceed original equipment specifications.

Silicone Cellulose Filter

Interceptor Part Number	ParFit Part Number	Micron Rating	Center Thread	Diameter	Length	Media Area Sq in. (Sq cm)	Solids Capacity	Maxumum Operating Pressur
IN HC3510 (Oboslete)	**PFHC3510**	10	1”-12	3.8 in. (9.7 cm)	5.0 in. (12.7 cm)	480 / 3096	0.3 oz (9.0 g)	100 PSI (689.6 kPa)
IN HC3525 (Oboslete)	**PFHC3525**	25	1”-12	3.8 in. (9.7 cm)	5.0 in. (12.7 cm)	450 / 2903	0.4 oz (12.5 g)	100 PSI (689.6 kPa)
IN HC3810 (Obsolete)	N/A	10	1”-12	3.8 in. (9.7 cm)	8.0 in. (20.2 cm)	878 / 5665	0.6 oz (16.7 g)	100 PSI (689.6 kPa)
IN HC3825 (Obsolete)	N/A	25	1”-12	3.8 in. (9.7 cm)	8.0 in. (20.2 cm)	826 / 5329	0.8 oz (23.1 g)	100 PSI (689.6 kPa)
IN HC5710	N/A	10	1.5”-16	5.0 in. (12.7 cm)	7.0 in. (17.8 cm)	950 / 6128	0.6 oz (18.1 g)	100 PSI (689.6 kPa)
IN HC5725	N/A	25	1.5”-16	5.0 in. (12.7 cm)	7.0 in. (17.8 cm)	900 / 5805	0.9 oz (25.2 g)	100 PSI (689.6 kPa)
IN HC51110	N/A	10	1.5”-16	5.0 in. (12.7 cm)	11.0 in. (27.9 cm)	1710 / 11030	1.1 oz (32.5 g)	100 PSI (689.6 kPa)
IN HC51125 (Obsolete)	**PFHC51125**	25	1.5”-16	5.0 in. (12.7 cm)	11.0 in. (27.9 cm)	1620 / 12449	1.6 oz (45.4 g)	100 PSI (689.6 kPa)

ParFit™ Products

Interceptor to Parfit Cross Reference Guide

Water Absorbing Filter

Interceptor Part Number	ParFit Part Number	Micron Rating	Center Thread	Diameter	Length	Media Area Sq in. (Sq cm)	Solids Capacity	Water Capacity	Maxumum Operating Pressur
IN HW3825 (Obsolete)	N/A	25	1”-12	3.8 in. (9.7 cm)	8.0 in. (20.3 cm)	350 / 2258	1.0 oz (28.7 g)	15.4 oz (455 ml)	100 PSI (689.6 kPa)
IN HW5710	N/A	10	$1^1/_2$”-16	5.0 in. (12.7 cm)	7.0 in. (17.8 cm)	383 / 2470	1.0 oz (27.6 g)	16.8 oz (498 ml)	100 PSI (689.6 kPa)
IN HW5725 (Obsolete)	**PFHW5725**	25	$1^1/_2$”-16	5.0 in. (12.7 cm)	7.0 in. (17.8 cm)	383 / 2470	1.1 oz (31.4 g)	16.8 oz (498 ml)	100 PSI (689.6 kPa)
IN HW51110	N/A	10	$1^1/_2$”-16	5.0 in. (12.7 cm)	11.0 in. (27.9 cm)	689 / 4444	1.7 oz (49.6 g)	30.3 oz (896 ml)	100 PSI (689.6 kPa)
IN HW3510 (Obsolete)	N/A	10	1”-12	3.8 in. (9.7 cm)	5.0 in. (12.7 cm)	190 / 1226	0.5 oz (13.7 g)	8.4 oz (247 ml)	100 PSI (689.6 kPa)
IN HW3510A (Obsolete)	N/A	10	$1^1/_8$”-16	3.8 in. (9.7 cm)	5.0 in. (12.7 cm)	190 / 1226	0.5 oz (13.7 g)	8.4 oz (247 ml)	100 PSI (689.6 kPa)
IN HW3825 (Obsolete)	N/A	25	1”-12	3.8 in. (9.7 cm)	5.0 in. (12.7 cm)	190 / 1226	0.6 oz (15.6 g)	8.4 oz (247 ml)	100 PSI (689.6 kPa)
IN HW3810 (Obsolete)	N/A	10	1”-12	3.8 in. (9.7 cm)	8.0 in. (20.3 cm)	350 / 2258	0.9 oz (25.2 g)	15.4 oz (455 ml)	100 PSI (689.6 kPa)
IN HW51125	N/A	25	$1^1/_2$”-16	5.0 in. (12.7 cm)	11.0 in. (27.9 cm)	689 / 4444	2.0 oz (56.5 g)	30.3 oz (896 ml)	100 PSI (689.6 kPa)

Stainless Steel Mesh Filters

Interceptor Part Number	ParFit Part Number	Micron Rating	Center Thread	Diameter	Length	Media Area Sq in. (Sq cm)	Solids Ca-pacity	Water Capacity
IN HSSM57 (Obsolete)	N/A	100 Mesh	$1^1/_2$”-16	5.0 in. (12.7 cm)	7.0 in. (17.8 cm)	200 / 1290	N/A	N/A
IN HSSM511 (Obsolete)	N/A	100 Mesh	$1^1/_2$”-16	5.0 in. (12.7 cm)	11.0 in. (27.9 cm)	315 / 3291	N/A	N/A

Micro Glass Filters

Interceptor Part Number	ParFit Part Number	Micron Rating	Center Thread	Diameter	Length	Media Area Sq in. (Sq cm)	Solids Ca-pacity	Water Capacity
IN HMG3606 (Obsolete)	N/A	6	$1^1/_2$”-16	3.8 in. (9.7 cm)	6.0 in. (15.2 cm)	240 / 1548	0.6 oz (16.3 g)	N/A
IN HM5710 (Obsolete)	N/A	10	$1^1/_2$”-16	5.0 in. (12.7 cm) (	7.0 in. (17.8 cm)	510 / 3291	2.0 oz (56.1 g)	N/A

Questions? Contact Technical Support:
800 344 3286 or 209 521 7860 ext. 7555
e-mail: racortech@parker.com

ParFit™ Products

Interceptor to Parfit Cross Reference Guide

Hydraulic Filters - Medium Pressure

Racor hydraulic filters for medium pressure applications are rated to 3,000 PSI, and are crafted from corrosion-resistant anodized aluminum. An optional pop-up indicator signals the bypass condition and need for element replacement; however, a built-in bypass valve allows the system to continue operating in an unfiltered condition. Two flow rates and housings lengths accept a 10 micron element with extended lengths providing longer element life and larger sump capacity.

Interceptor Part Number	ParFit Part Number	Flow Rate	Pressure	Element Length
IN HP60077 (Obsolete)	N/A	20.0 GPM (75.7 LPM)	3000 PSI (206 bar)	Standard
IN HP60080 (Obsolete)	N/A	20.0 GPM (75.7 LPM)	3000 PSI (206 bar)	Extended
IN HP60083 (Obsolete)	N/A	50.0 GPM (189.3 LPM)	3000 PSI (206 bar)	Standard
IN HP60086 (Obsolete)	N/A	50.0 GPM (189.3 LPM)	3000 PSI (206 bar)	Extended

Hydraulic Filter Heads

1. **Specify L or R. L provides the standard color-coded bar restriction gauge on the side of the head with the flow direction going to your left. R has the flow going to the right.**
2. **MP signifies a multi-port head. The multi-ports are for an optional in-head vacuum gauge, such as the IN HG 15LF.**

Interceptor Part Number	ParFit Part Number	Center Thread	Port Size	Flow Rate	Application	Bypass Setting	Restriction Gauge	Gauge Port	Maxumum Operating Pressur
N/A	**PFHH07500**	1”-12	3/4” NPT	15 GPM (56 LPM)	N/A	N/A	N/A	N/A	175 PSI (12.1 bar)
N/A	**PFFDH12500**	1.5”-16	1.3” NPT	50 GPM (189 LPM)	N/A	N/A	Optional	1/8” NPT	100 PSI (6.9 bar)
IN HH07503 (Obsolete)	N/A	1”-12	3/4” NPT	15 GPM (56 LPM)	3500/3800 Series	3 PSI (0.2 bar)	Optional	1/8” NPT	175 PSI (12.1 bar)
IN HH07515	N/A	1”-12	3/4” NPT	15 GPM (56 LPM)	3500/3800 Series	15 PSI	Optional	1/8” NPT	175 PSI (12.1 bar)
IN HH07525	N/A	1”-12	3/4” NPT	15 GPM (56 LPM)	3500/3800 Series	25 PSI	Optional	1/8” NPT	175 PSI (12.1 bar)
IN HH07515MP[2]	N/A	1”-12	3/4” NPT	15 GPM (56 LPM)	3500/3800 Series	15 PSI	Optional	1/8” NPT	175 PSI (12.1 bar)
IN HH07525MP[2] (Obsolete)	N/A	1”-12	3/4” NPT	15 GPM (56 LPM)	3500/3800 Series	25 PSI	Optional	1/8” NPT	175 PSI (12.1 bar)
IN HH12515L[1] (Obsolete)	N/A	1.5”-16	1.3” NPT	50 GPM (189 LPM)	5700/5100 Series	15 PSI	Standard	1/8” NPT	175 PSI (12.1 bar)
IN HH12515R[1]	N/A	1.5”-16	1.3” NPT	50 GPM (189 LPM)	5700/5100 Series	15 PSI	Standard	1/8” NPT	175 PSI (12.1 bar)
IN HH12525L (Obsolete)	**PFHH12525L**[1]	1.5”-16	1.3” NPT	50 GPM (189 LPM)	5700/5100 Series	25 PSI	Standard	1/8” NPT	175 PSI (12.1 bar)

Questions? Contact Technical Support:
800 344 3286 or 209 521 7860 ext. 7555
e-mail: racortech@parker.com

Parker Racor

ParFit™ Products

Interceptor to Parfit Cross Reference Guide

Hydraulic Filter Heads

1. **Specify L or R. L provides the standard color-coded bar restriction gauge on the side of the head with the flow direction going to your left. R has the flow going to the right.**
2. **MP signifies a multi-port head. The multi-ports are for an optional in-head vacuum gauge, such as the IN HG 15LF.**

Interceptor Part Number	ParFit Part Number	Center Thread	Port Size	Flow Rate	Application	Bypass Setting	Restriction Gauge	Gauge Port	Maxumum Operating Pressur
IN HH12525R (Obsolete)	**PFHH12525R**[1]	1.5”-16	1.3” NPT	50 GPM (189 LPM)	5700/5100 Series	25 PSI	Standard	1/8” NPT	175 PSI (12.1 bar)
IN HH12515MP (Obsolete)	**PFHH12515MP**[2]	1.5”-16	1.3” NPT	50 GPM (189 LPM)	5700/5100 Series	15 PSI	Optional	1/8” NPT	175 PSI (12.1 bar)
IN HH12525MP (Obsolete)	**PFHH12525MP**[2]	1.5”-16	1.3” NPT	50 GPM (189 LPM)	5700/5100 Series	25 PSI	Optional	1/8” NPT	175 PSI (12.1 bar)

Replacement Pressure Gauge

IN HG15LF

Compound Pressure Vacuum Gauge

- **1.5” Dial, Liquid Filled,**
- **Stainless Steel Enclosure, and**
- **1/8”NPT Back Mount.**

Hydraulic Reservoir Breathers

RESERVOIR BREATHERS

Reservoir breather filters provide precision hydraulic components with special protection against wear particles and destructive moisture. These inherent contaminants can damage and destroy close tolerance pumps, motors, actuators, valves, and other hydraulic-driven parts. Their useful life can be severely reduced and expensive costs incurred for downtime and replacement parts. The use of reservoir breather filters is especially critical in high humidity areas or where moisture is present near hydraulic systems.

Interceptor Hydraulic Reservoir Breather Filters contain a dual-purpose ten (10) micron media which removes both dirt and moisture from hydraulic reservoir air. The Spin-On design provides ease of service and they fit in most mobile, marine and off-highway applications.

Change the breather after each 500 hours of operation. More frequent replacement may be required when operated in heavily contaminated areas. Under such conditions, increase replacement frequency to every 250 hours.

Questions? Contact Technical Support:
800 344 3286 or 209 521 7860 ext. 7555
e-mail: racortech@parker.com

ParFit™ Products

Interceptor to Parfit Cross Reference Guide

Reservoir Breather Adapters

Reservoir Breathers

Reservoir breather filters provide precision hydraulic components with special protection against wear particles and destructive moisture. These inherent contaminants can damage and destroy close tolerance pumps, motors, actuators, valves, and other hydraulic-driven parts. Their useful life can be severely reduced and expensive costs incurred for downtime and replacement parts. The use of reservoir breather filters is especially critical in high humidity areas or where moisture is present near hydraulic systems.

Interceptor Hydraulic Reservoir Breather Filters contain a dual-purpose ten (10) micron media which removes both dirt and moisture from hydraulic reservoir air. The Spin-On design provides ease of service and they fit in most mobile, marine and off-highway applications.

Change the breather after each 500 hours of operation. More frequent replacement may be required when operated in heavily contaminated areas. Under such conditions, increase replacement frequency to every 250 hours.

Interceptor simplifies installation to the tank with the use of adapters which include O-rings for an air-tight seal and are listed for all Interceptor Reservoir Breathers below. A pipe flange, weld collar, etc. may be used to connect the adaptor to the reservoir, if needed. Make sure that air is not able to leak around the adaptor. When mounting on the side of the reservoir, the installation should be as high as possible to stay above the surface of the fluid. See illustrations below.

Selection

Find the maximum rate of reservoir drawdown or air flow exchange rate for your application. As a rule, clean pressure drop should be limited to 0.18 psid (5”H2O).

Use the graphs shown, if applicable.

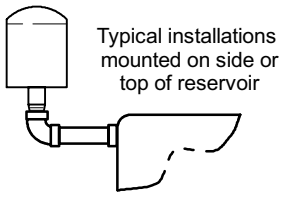

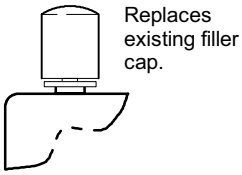

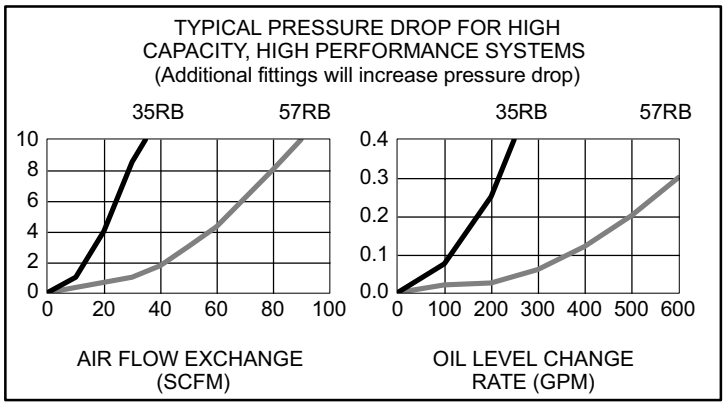

Specifications

Interceptor Part Number	ParFit Part Number	Micron Rating	Center Thread	Filter Diameter	Filter Length	Media Aria (Sq. in./cm)	Solids Capacity	Water Capacity
IN HW33RB (Obsolete)	N/A	10	3/4”-16	3.0 in. (7.6 cm)	3.0 in. (7.6 cm)	60 / 387	0.2 oz (4.3 g)	2.6 oz (78 ml)
IN HW35RB (Obsolete)	N/A	10	1”-16	3.8 in. (9.7 cm)	5.0 in. (12.7 cm)	190 / 1226	0.5 oz (13.7 g)	8.4 oz (247 ml)
IN HW57RB	N/A	10	1.5”-16	5.0 in. (12.7 cm)	7.0 in. (17.8 cm)	383 / 2470	1.0 oz (27.6 g)	16.8 oz (498 ml)

Questions? Contact Technical Support:
800 344 3286 or 209 521 7860 ext. 7555
e-mail: racortech@parker.com

Parker Racor

Turbine Series

Turbine Series

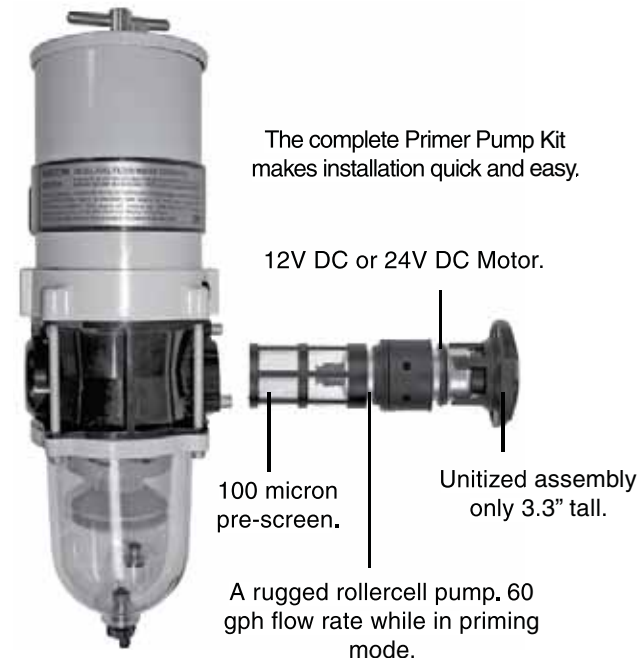

900FH

All Racor filter materials and seals are compatible with ultra-low sulphur diesel (ULSD) fuel and B2 to B20 Biodiesel. See Racor bulletin 7679.

500FG

75500FGX

751000FHX

771000FH

And more…

Turbine Series Electric Primer Pump

The Turbine Series Electric Primer Pump Kits can be retrofitted to many of the Racor 900 or 1000 series fuel filters already in service. The Filter Pump is an innovative and proprietary system consisting of a pre-screen filter, a flow bypass circuit and a roller cell pump powered by a DC motor. When the switch is activated the fuel is drawn into the pre-screen and then pumped through the housing, refilling the unit with fuel. When not in use the Filter Pump system is bypassed and the Racor fuel filter/water separator functions normally.

The RKP1912, 12V DC Kit, contains a traditional brushed motor design. The RKP1924, 24V DC Kit, contains innovative brushless motor technology.

The use of this primer pump kit allows the operator to easily re-prime the Racor Filter/Separator directly from the fuel storage tank with no mess

Turbine Series

Turbine Series filter assemblies are designed to be installed on the vacuum side of the fuel transfer pump for best efficiency and protect precision engine components from dirt, rust, algae, asphaltines, varnishes, and especially water, which is prevalent in engine fuels. They remove contaminates from fuel using the following legendary three stage process:

Stage One: Separation

As fuel enters the filter assembly, it moves through the centrifuge and spins off large solids and water droplets which fall to the bottom of the collection bowl.

Stage Two: Coalescing

Small water droplets bead-up on the surface of the conical baffle and cartridge element. When heavy enough, they too fall to the bottom of the bowl.

Stage Three: Filtration

Proprietary Aquabloc®II cartridge elements repel water and remove contaminants from fuel down to two micron (nominal). They are waterproof and effective longer then water absorbing elements.

Features and Benefits

- **Available in several sizes to fit any application.**
- **Heavy duty construction.**
- **Installs quickly.**
- **Available in 2, 10, and 30 micron.**
- **Easy to service.**
- **Clear collection bowl.**
- **Self-venting water drain.**

Optional accessories may include: water detection kits, 12 or 24 volt dc heaters, heavy-duty fuel hose and fittings. see Accessories section.

Questions? Contact Technical Support:
800 344 3286 or 209 521 7860 ext. 7555
e-mail: racortech@parker.com

Turbine Series Overview

Specifications	500FG	900FH	1000FH
Maximum Flow Rate: **(one unit online)** **(two units online)** **(three units online)**	 60 GPH (227 LPH) N/A N/A	 90 GPH (341 LPH) N/A N/A	 180 GPH (681 LPH) N/A N/A
Port Size (female threads)	3/4´´-16 UNF (SAE J1926)	7/8´´-14 UNF (SAE J1926)	7/8´´-14 UNF (SAE J1926)
Min. Service Clearance: **(above assembly)** **(below assembly)**	 5.0 in. (12.7 cm) 2.0 in. (5.1 cm)	 7.5 in. (19.1 cm) 2.0 in (5.1 cm)	 10.0 in. (25.4 cm) 2.0 in. (5.1 cm)
Replacement Element: **(2 micron)** **(10 micron)** **(30 micron)**	(1 Per Assembly) 2010SM-OR 2010TM-OR 2010PM-OR	(1 Per Assembly) 2040SM-OR 2040TM-OR 2040PM-OR	(1 Per Assembly) 2020SM-OR 2020TM-OR 2020PM-OR
Height	11.5 in. (29.2 cm)	17.0 in. (43.2 cm)	22.0 in. (55.9 cm)
Depth	4.8 in. (12.2 cm)	7.0 in. (17.8 cm)	7.0 in. (17.8 cm)
Width	5.8 in. (14.7 cm)	6.0 in. (15.2 cm)	6.0 in. (15.2 cm)
Weight (dry)	4.0 lb (1.8 kg)	6.0 lb (2.7 kg)	10.0 lb (4.5 kg)
Clean Pressure Drop	0.25 PSI (1.7 kPa)	0.30 PSI (2.1 kPa)	0.43 PSI (3.0 kPa)
Maximum Pressure[1]	25 PSI (1 bar)	25 PSI (1 bar)	25 PSI (1 bar)
Water In Bowl Capacity: **(per bowl)**	3.7 oz (109 ml)	10.3 oz (305 ml)	10.3 oz (305 ml)
Available Options:[2] **(water detection kit)** **(12 or 24 volt dc heater)** **(vacuum gauge)**	 Yes Yes Yes	 Yes Yes Yes	 Yes Yes Yes
H_2O Removal Efficiency	99%		
Operating Temperature	-40° to +255°F / -40° to +124°C		

[1] Pressure installations are applicable up to the maximum PSI shown. Vacuum installations are recommended.
[2] Not for use on gasoline applications.
Note: Units with 1/2´´ NPT ports are available, contact the factory.

Turbine Series

Turbine Series Overview

Specifications	75500FGX	75900FHX	751000FHX
Maximum Flow Rate: **(one unit online)** **(two units online)** **(three units online)**	60 GPH (227 LPH) 120 GPH (454 LPH) N/A	90 GPH (341 LPH) 180 GPH (681 LPH) N/A	180 GPH (681 LPH) 360 GPH (1363 LPH) N/A
Port Size (female threads)	3/4´´-16 UNF (SAE J1926 female threads)	7/8´´-14 UNF (SAE J514 male threads)	7/8´´-14 UNF (SAE J514 male threads)
Min. Service Clearance: **(above assembly)** **(below assembly)**	5.0 in. (12.7 cm) 2.0 in. (5.1 cm)	7.5 in. (19.1 cm) 2.0 in (5.1 cm)	10.0 in. (25.4 cm) 2.0 in. (5.1 cm)
Replacement Element: **(2 micron)** **(10 micron)** **(30 micron)**	(2 Per Assembly) 2010SM-OR 2010TM-OR 2010PM-OR	(2 Per Assembly) 2040SM-OR 2040TM-OR 2040PM-OR	(2 Per Assembly) 2020SM-OR 2020TM-OR 2020PM-OR
Height	11.5 in. (29.2 cm)	17.0 in. (43.2 cm)	22.0 in. (55.9 cm)
Depth	9.5 in. (24.1 cm)	11.0 in. (27.9 cm)	11.0 in. (27.9 cm)
Width	14.5 in. (36.8 cm)	18.8 in. (47.8 cm)	18.8 in. (47.8 cm)
Weight (dry)	17.0 lb (7.7 kg)	23.0 lb (10.4 kg)	30.0 lb (13.6 kg)
Clean Pressure Drop	0.7 PSI (4.8 kPa)	1.7 PSI (11.7 kPa)	3.7 PSI (25.5 kPa)
Maximum Pressure[1]	25 PSI (1 bar)	25 PSI (1 bar)	25 PSI (1 bar)
Water In Bowl Capacity: **(per bowl)**	3.7 oz (109 ml)	10.3 oz (305 ml)	10.3 oz (305 ml)
Available Options:[2] **(water detection kit)** **(12 or 24 volt dc heater)** **(vacuum gauge)**	Yes Yes Yes	Yes Yes Yes	Yes Yes Yes
H_2O Removal Efficiency	99%		
Operating Temperature	-40° to +255°F / -40° to +124°C		

[1] Pressure installations are applicable up to the maximum PSI shown. Vacuum installations are recommended.
[2] Not for use on gasoline applications.
Note: Units with 1/2´´ NPT ports are available, contact the factory.

Questions? Contact Technical Support:
800 344 3286 or 209 521 7860 ext. 7555
e-mail: racortech@parker.com

Turbine Series

How to Order

(The example below illustrates how part numbers are constructed.)

500FG	12	2
Specify **500FG** for 3/4´´-16 UNF ports or ***500FG** for 16M ports.	Add **12** for a 12 volt dc heater or **24** for a 24 volt dc heater[1]. (omit if not desired)	Specify a micron rating: **2**, **10**, or **30**.
[1] 150 watt heater, use with a Racor relay kit - see Accessories.		

Replacement Elements (seals included)		
2 micron (Final Filtration)	10 micron (Secondary Filtration)	30 micron (Primary Filtration)
2010SM-OR	2010TM-OR	2010PM-OR

All 2010 Series filters are 2.7" tall by 3.1” in diameter.

Not all configurations are available - contact Technical Support for more information.

Mounting Instructions

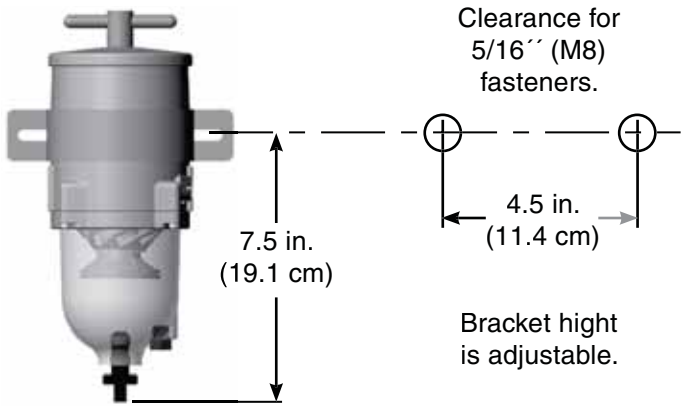

Note: Mount filter assembly as close to vertical (V) as possible. For best efficiency, do not exceed 10° from V.

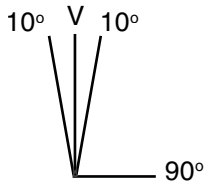

Turbine Series

Replacement Parts

500FG

	Part Number	Description
1.	**RK 15378**	Mounting Bracket Kit
	RK 11838	Bracket Hardware Kit (5/16´´-18, not shown)
2.	**N/A**	Body Kit (3/4´´-16 UNF Ports)
	N/A	Body Kit (16M X 1.5 Ports)
3.	**RK 15035**	Bowl Ring Kit
4.	**RK 15081**	Hex Head Capscrews Kit (includes 4, 10-24 x 7/8´´)
5.	**RK15405**	Clear Bowl Kit (includes bowl, drain, bowl gasket and probe plug)
	RK 15301	Metal Bowl Kit (not shown) (includes 1/4´´ NPT drain)
6.	**RK 11-1945**	T-handle and O-ring Kit (9/16´´-18 UNF threads)
	11350	T-handle O-ring
7.	**RK 15078**	Lid and Lid Gasket Kit
	15005	Lid Gasket
8.	**N/A**	Return Tube Kit
9.	(Replacement elements include seals)	
	2010SM-OR	2 Micron Element
	2010TM-OR	10 Micron Element
	2010PM-OR	30 Micron Element
10.	(Heater kits include item #11)	
	RK 15383-01[1]	Heater Kit (12 vdc, 150 watt)
	RK 15383-02[1]	Heater Kit (24 vdc, 150 watt)
11.	**RK 21067**	Feed-thru Assy Kit (for heater)
	RK 11-1679	Feed-thru Plug Kit (not shown)
12.	**15374**	Bowl Gasket
13.	**RK 15010B**	Check Ball with Seal Kit
14.	**RK 15013D**	Centrifuge/Conical Baffle Kit
15.	**RK 20126**	Water Probe Port Plug Kit
16.	**RK 21069**[2]	Water Sensor Probe Kit
	Additional Parts (not shown)	
	RK 15211	Complete Seal Service Kit

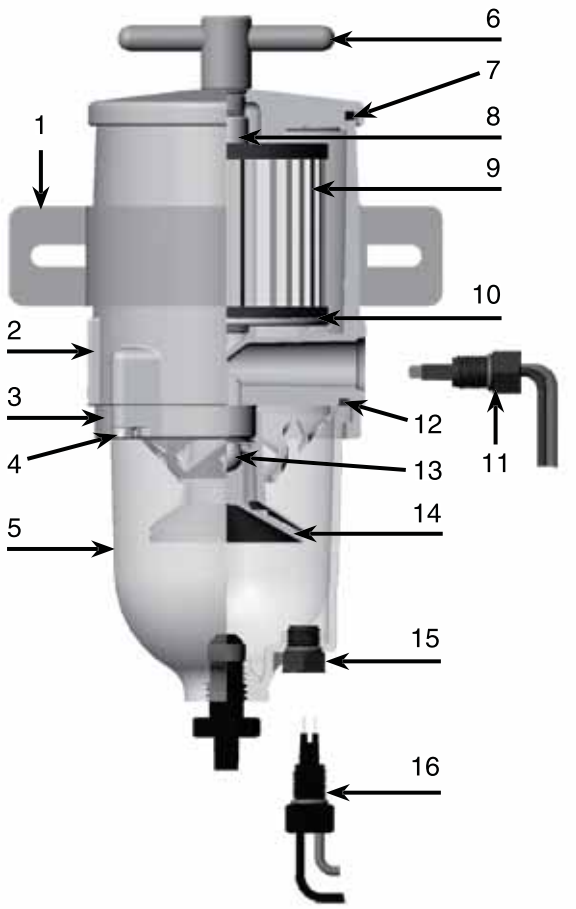

Notes:

[1] In-filter heater kits require a Heater Relay Kit - see Accessories section of this catalog. Maximum power requirements for in-filter heaters are: 12.5 amps for 12 vdc and 6.3 amps for 24 vdc.

[2] Water probe must be used with Water Detection Kit - see Accessories section of this catalog.

Questions? Contact Technical Support:
800 344 3286 or 209 521 7860 ext. 7555
e-mail: racortech@parker.com

Turbine Series

How to Order

(The example below illustrates how part numbers are constructed.)

900FH	312	2
Specify **900FH** for 7/8´´-14 UNF ports or **902FH** for 22M ports.	Add **312** for a 12 volt dc heater or **324** for a 24 volt dc heater[1]. (omit if not desired)	Specify a micron rating: **2**, **10**, or **30**.
[1] 300 watt heater, use with a Racor relay kit - see Accessories.		

Replacement Elements (seals included)		
2 micron (Final Filtration)	10 micron (Secondary Filtration)	30 micron (Primary Filtration)
2040SM-OR	2040TM-OR	2040PM-OR

All 2040 Series filters are 4.6" tall by 4.7” in diameter.

Not all configurations are available - contact Technical Support for more information.

Mounting Instructions

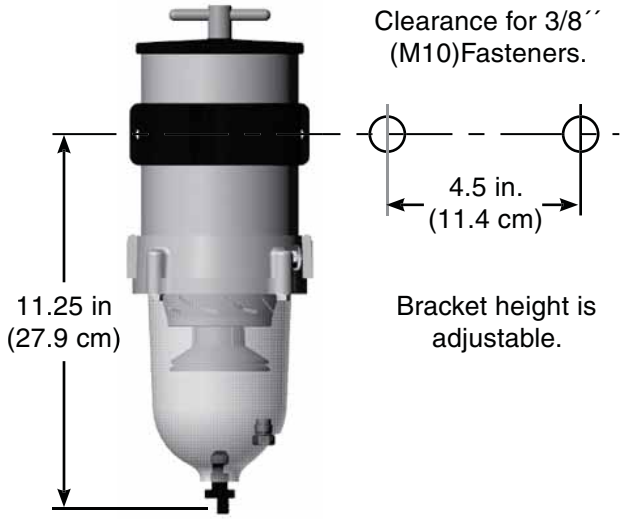

Note: Mount filter assembly as close to vertical (V) as possible. For best efficiency, do not exceed 10° from V.

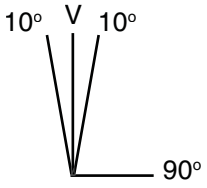

Turbine Series

Replacement Parts

900FH

	Part Number	Description
1.	**RK 11-1945**	T-handle and O-ring Kit (9/16´´-18 UNF Threads)
	11350	T-handle O-ring
2.	**RK 11-1927-01**	Lid and Lid Gasket Kit
	11007	Lid (and Bowl) Gasket
3.	**RK11-2009**	see note 4 below
4.	**RK11-2009**	see note 4 below
5.	**RK 11815-103**	Mounting Bracket (hardware included)
6.	(All replacement elements include seals)	
	2040SM-OR	2 Micron Element
	2040TM-OR	10 Micron Element
	2040PM-OR	30 Micron Element
7.	**RK11-2009**	see note 4 below
8.	(Heater kits include item #9)	
	RK 11-1800-01[1]	Heater Kit (12 vdc, 300 watt)
	RK 11-1800-02[1]	Heater Kit (24 vdc, 300 watt)
9.	**RK 21067**	Feed-thru Assy Kit (for heater)
	RK 11-1679	Feed-thru Plug Kit (not shown)
10.	**11007**	Bowl (and Lid) Gasket
11.	**RK 11028B**	Check Ball with Seal Kit
12.	**RK 11-1939**	Centrifuge/Conical Baffle Kit
13.	**RK 32204**[2]	Water Sensor Probe Kit
	RK 20126	Water Probe Port Plug Kit
14.	**RK11-2009**	see note 4 below
15.	**RK 11037A**	Bowl Ring Kit (5´´ Diameter)
16.	**RK 11542**	Capscrew Kit (quantity - 4)
17.	**RK 11-1938**	Clear Bowl Kit (includes bowl, drain, bowl gasket and probe plug)
	Additional Parts (not shown)	
	RK 11-1952	Complete Seal Service Kit
	RK11-1978[3]	Checkball and Spring Kit

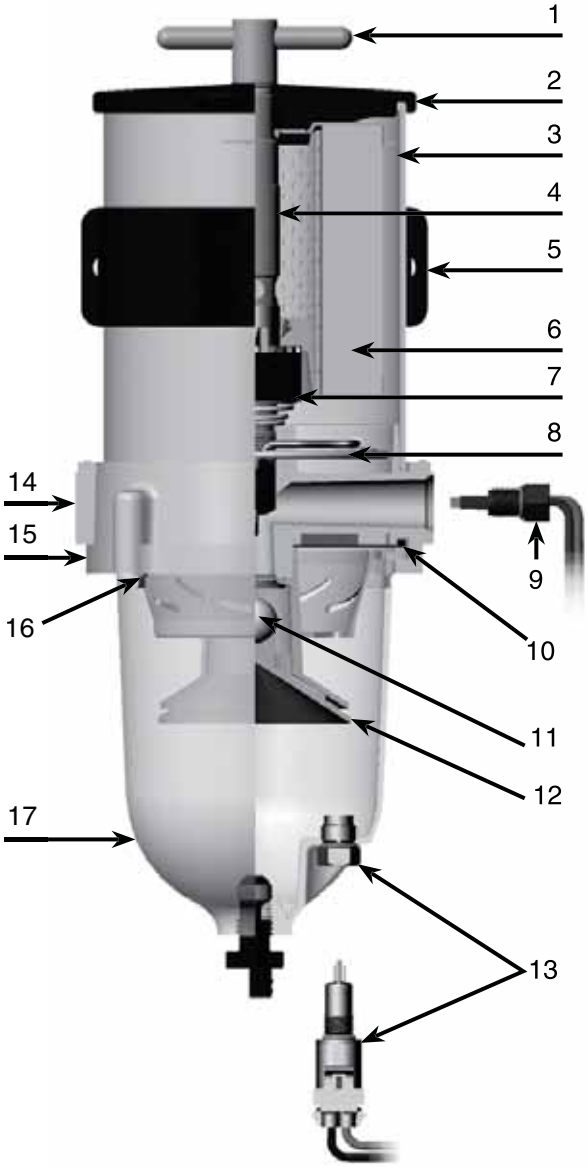

Notes:

[1] In-filter heater kits require a Heater Relay Kit - see Accessories section of this catalog. Maximum power requirements for in-filter heaters are: 25 amps for 12 vdc and 12.5 amps for 24 vdc.

[2] Water probe must be used with Water Detection Kit - see Accessories section of this catalog. Water probe features a detachable harness connector.

[3] Spring Kit on all 900 or 1000 Turbine Series fuel filter/water separator assemblies for those applications with insufficient back pressure. **Do NOT** use this kit on 500 Turbine Series assemblies.

[4] This replacement kit includes the filter body, cylinder, and return tube, pre-assembled and ready to go. It also includes two (2) additional 11007 gaskets (for the lid and bowl) and four (4) new fasteners to install the bowl and bowl ring. The kit will be packaged in a single carton.

Questions? Contact Technical Support:
800 344 3286 or 209 521 7860 ext. 7555
e-mail: racortech@parker.com

Turbine Series

How to Order

(The example below illustrates how part numbers are constructed.)

1000FH	312	2
Specify **1000FH** for 7/8´´-14 UNF ports or **1002FH** for 22M ports.	Add **312** for a 12 volt dc heater or **324** for a 24 volt dc heater[1]. (omit if not desired)	Specify a micron rating: **2**, **10**, or **30**.
[1] 300 watt heater, use with a Racor relay kit - see Accessories.		

Replacement Elements (seals included)		
2 micron (Final Filtration)	10 micron (Secondary Filtration)	30 micron (Primary Filtration)
2020SM-OR	2020TM-OR	2020PM-OR

All 2020 Series filters are 9.6" tall by 4.7” in diameter.

Not all configurations are available - contact Technical Support for more information.

Mounting Instructions

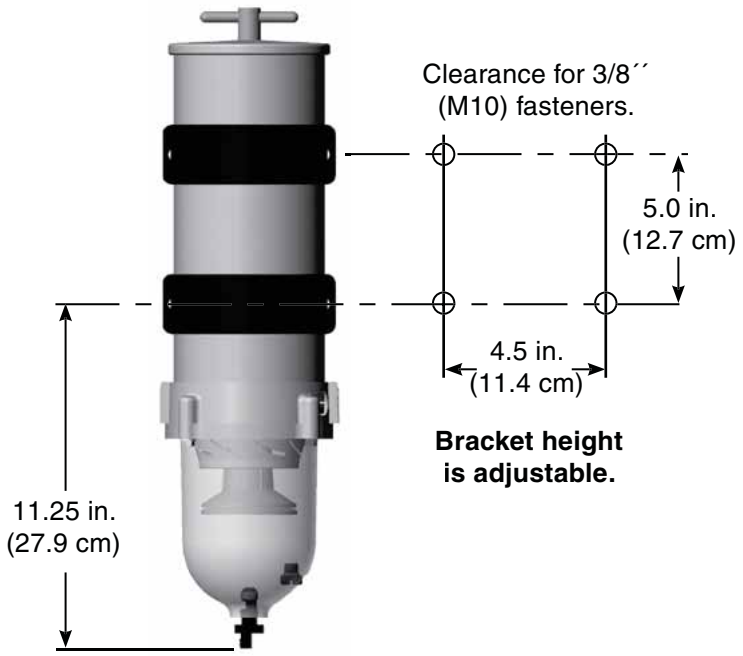

Note: Mount filter assembly as close to vertical (V) as possible. For best efficiency, do not exceed 10° from V.

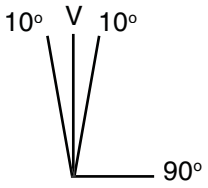

Turbine Series

Replacement Parts

1000FH

	Part Number	Description
1.	**RK 11-1945**	T-handle and O-ring Kit (9/16´´-18 UNF Threads)
	11350	T-handle O-ring
2.	**RK 11-1927-01**	Lid and Gasket Kit
	11007	Lid (and Bowl) Gasket
3.	**RK11-2010**	see note 4 below
4.	**RK11-2010**	see note 4 below
5.	**RK 11815-103**	Mounting Bracket (includes bracket hardware)
6.	(All replacement elements include seals)	
	2020SM-OR	2 Micron Element
	2020TM-OR	10 Micron Element
	2020PM-OR	30 Micron Element
7.	**RK11-2010**	see note 4 below
8.	(Heater kits include item #9)	
	RK 11-1800-01[1]	Heater (12 vdc, 300 watt)
	RK 11-1800-02[1]	Heater (24 vdc, 300 watt)
9.	**RK 21067**	Feed-thru Assy (for heater)
	RK 11-1679	Feed-thru Plug (not shown)
10.	**11007**	Bowl (and Lid) Gasket
11.	**RK 11028B**	Check Ball with Seal
12.	**RK 11-1939**	Centrifuge/Conical Baffle
13.	**RK 32204**[2]	Water Sensor Probe
	RK 20126	Water Probe Port Plug
14.	**RK11-2010**	see note 4 below
15.	**RK 11037A**	Bowl Ring (5´´ diameter)
16.	**RK 11542**	Capscrew Kit (quantity - 4)
17.	**RK 11-1938**	Clear Bowl Kit (includes bowl, drain, bowl gasket and probe plug)

Additional Parts (not shown)

RK 11-1952	Complete Seal Service Kit
RK11-1978[3]	Checkball and Spring Kit

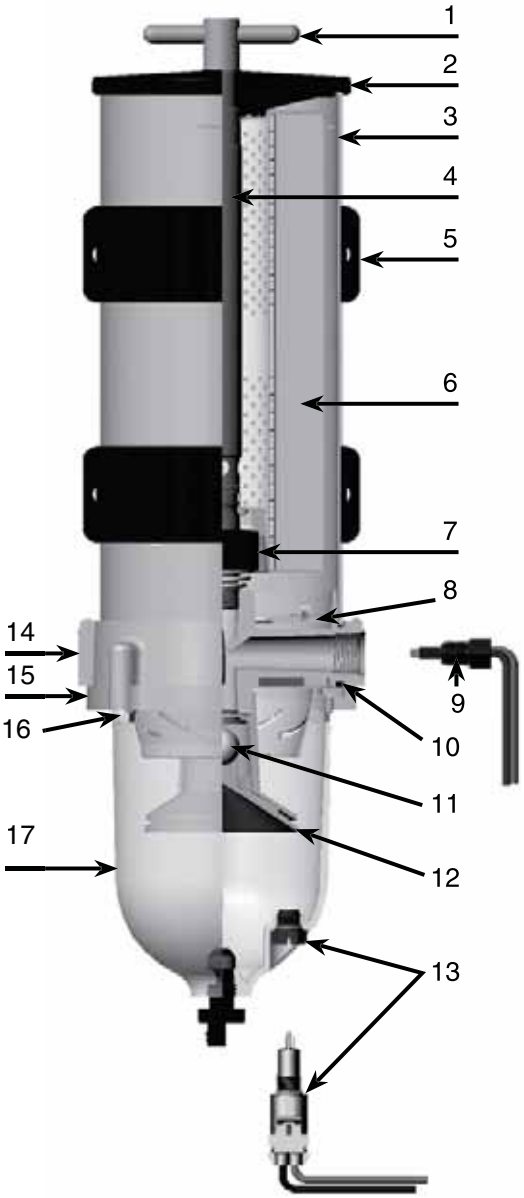

Notes:

[1] In-filter heater kits require a Heater Relay Kit - see Accessories section of this catalog. Maximum power requirements for in-filter heaters are: 25 amps for 12 vdc and 12.5 amps for 24 vdc.

[2] Water probe must be used with Water Detection Kit - see Accessories section of this catalog. Water probe features a detachable harness connector.

[3] Spring Kit on all 900 or 1000 Turbine Series fuel filter/water separator assemblies for those applications with insufficient back pressure. **Do NOT** use this kit on 500 Turbine Series assemblies.

[4] This replacement kit includes the filter body, cylinder, and return tube, pre-assembled and ready to go. It also includes two (2) additional 11007 gaskets (for the lid and bowl) and four (4) new fasteners to install the bowl and bowl ring. The kit will be packaged in a single carton.

Turbine Series

How to Order

(The example below illustrates how part numbers are constructed.)

75500FGX	12	2
Base model with 3/4´´-16 UNF fuel ports (SAE J1926)	Add **12** for a 12 volt dc heater or **24** for a 24 volt dc heater[1]. (omit if not desired)	Specify a micron rating: **2**, **10**, or **30**.
[1] 150 watt heater, use with a Racor relay kit - see Accessories.		

Replacement Elements (seals included)		
2 micron (Final Filtration)	10 micron (Secondary Filtration)	30 micron (Primary Filtration)
2010SM-OR	2010TM-OR	2010PM-OR

Note: 75500FGX assemblies use TWO elements (one per 500FG housing).
Not all configurations are available - contact Technical Support for more information.

Mounting Instructions

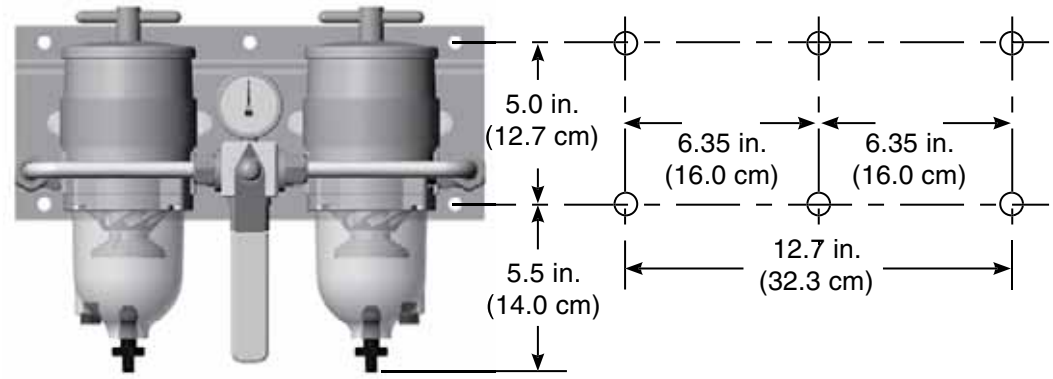

Turbine Series

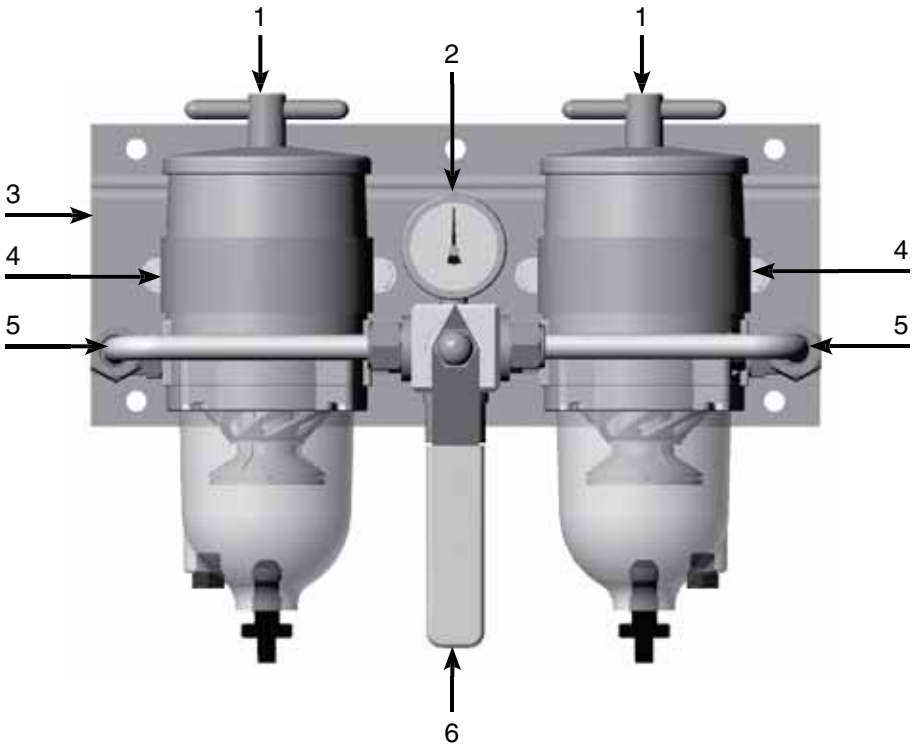

Replacement Parts

75500FGX

	Part Number	Description
1.	**500FG**	See 500FG Replacement Parts List
2.	**RK 19476**	Gauge Assembly Kit
3.	**RK 15329**	Main Bracket Kit
4.	**RK 15378**	Housing Bracket
	RK 11838	Housing Bracket Hardware (5/16´´-18, not shown)
5.	**RK 15391**	Rigid Tubing and Fittings Kit
6.	**RK 15390**	Heavy-Duty Valve Assembly Kit

Turbine Series

How to Order

(The example below illustrates how part numbers are constructed.)

75900FHX	312	2
Base model with 7/8´´-14 UNF fuel ports (SAE J514)	Add **312** for a 12 volt dc heater or **324** for a 24 volt dc heater[1]. (omit if not desired)	Specify a micron rating: **2**, **10**, or **30**.
[1] 300 watt heater, use with a Racor relay kit - see Accessories.		

Replacement Elements (seals included)		
2 micron (Final Filtration)	10 micron (Secondary Filtration)	30 micron (Primary Filtration)
2040SM-OR	2040TM-OR	2040PM-OR

Note: 75900FHX assemblies use TWO elements (one per 900FH housing).

Not all configurations are available - contact Technical Support for more information.

Mounting Instructions

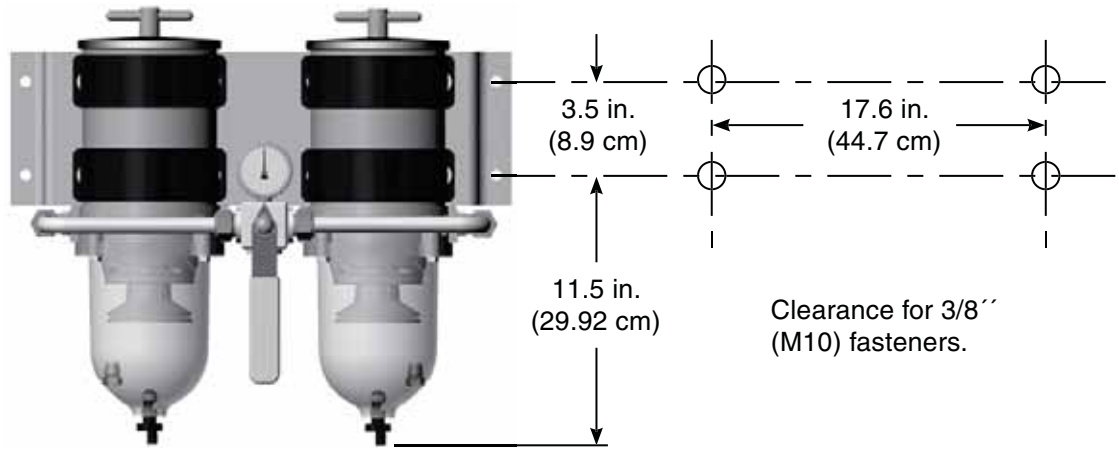

Turbine Series

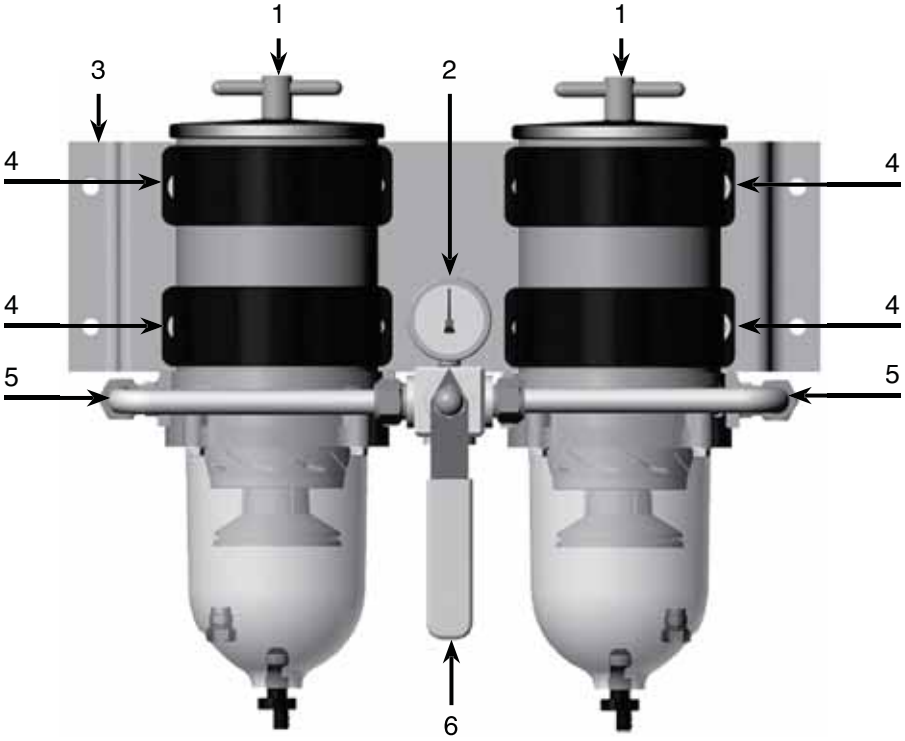

Replacement Parts

75900FHX

	Part Number	Description
1.	**900FH**	See 900FH Replacement Parts List
2.	**RK 19476**	Gauge Assembly Kit
3.	**RK 19486**	Main Bracket Kit
4.	**RK 11815-103**	Housing Bracket (includes hardware)
5.	**RK 19475**	Rigid Tubing and Fittings Kit
6.	**RK 19473**	Valve Assembly Kit
	RK 19506	Valve Service Kit (not shown)

Questions? Contact Technical Support:
800 344 3286 or 209 521 7860 ext. 7555
e-mail: racortech@parker.com

Turbine Series

How to Order

(The example below illustrates how part numbers are constructed.)

751000FHX	312	2
Model with 7/8´´-14 UNF fuel ports (SAE J514).	Add **312** for a 12 volt dc heater or **324** for a 24 volt dc heater[1]. (omit if not desired)	Specify a micron rating: **2**, **10**, or **30**.
[1] 300 watt heater, use with a Racor relay kit - see Accessories.		

Replacement Elements (seals included)		
2 micron (Final Filtration)	10 micron (Secondary Filtration)	30 micron (Primary Filtration)
2020SM-OR	2020TM-OR	2020PM-OR

Note: 751000FHX assemblies use TWO elements (one per 1000FH housing).
Not all configurations are available - contact Technical Support for more information.

Mounting Instructions

3.88´´ (9.8 cm)

17.6´´ (44.7 cm)

10.5´´ (26.7 cm)

Clearance for 3/8´´ (M10) fasteners.

Turbine Series

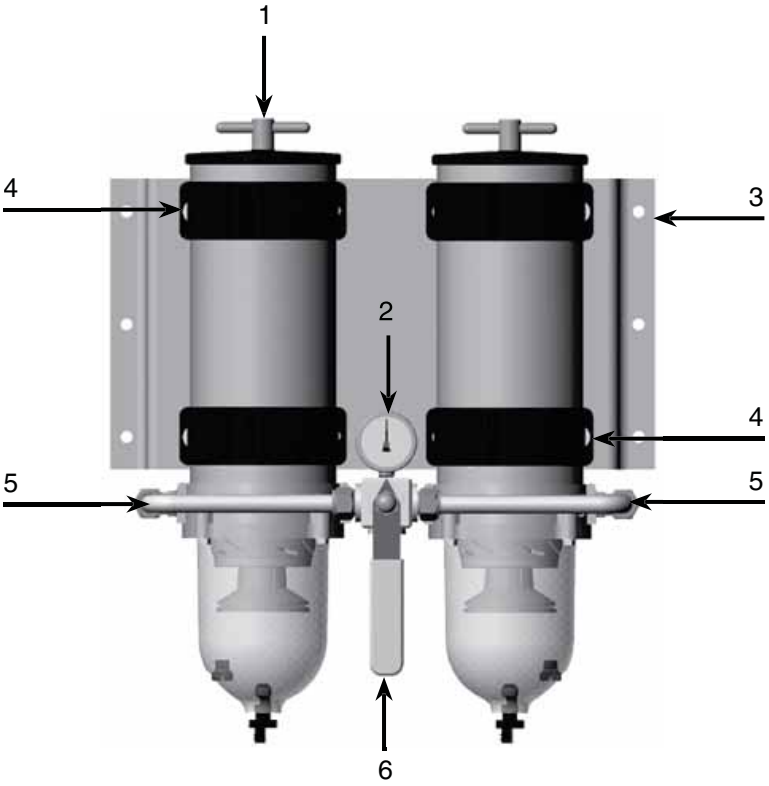

Replacement Parts

751000FHX

	Part Number	Description
1.	**1000FH**	See 1000FH Replacement Part List
2.	**RK 19476**	Gauge Assembly Kit
3.	**RK 11-1777**	Main Bracket Kit
4.	**RK 11815-103**	Housing Bracket (includes hardware)
5.	**RK 19475**	Rigid Tubing and Fittings Kit
6.	**RK 19473**	Valve Assembly Kit
	RK 19506	Valve Service Kit (not shown)

Questions? Contact Technical Support:
800 344 3286 or 209 521 7860 ext. 7555
e-mail: racortech@parker.com

Turbine Series Overview

Specifications	731000FH	771000FH	791000FHV
Maximum Flow Rate: **(one unit online)** **(two units online)** **(three units online)**	 N/A 360 GPH (1363 LPH) N/A	 N/A N/A 540 GPH (2044 LPH)	 180 GPH (681 LPH) 360 GPH (1363 LPH) 540 GPH (2044 LPH)
Port Size (male threads)	3/4´´-14 NPT (SAE J476)	1´´-11.5 NPT (SAE J476)	3/4´´-14 NPT (SAE J476)
Min. Service Clearance: **(above assembly)** **(below assembly)**	 10.0 in. (25.4 cm) 2.0 in. (5.1 cm)	 10.0 in. (25.4 cm) 2.0 in. (5.1 cm)	 10.0 in. (25.4 cm) 2.0 in. (5.1 cm)
Replacement Element: **(2 micron)** **(10 micron)** **(30 micron)**	(2 Per Assembly) 2020SM-OR 2020TM-OR 2020PM-OR	(3 Per Assembly) 2020SM-OR 2020TM-OR 2020PM-OR	(3 Per Assembly) 2020SM-OR 2020TM-OR 2020PM-OR
Height	22.0 in. (55.9 cm)	22.0 in. (55.9 cm)	22.0 in. (55.9 cm)
Depth	12.0 in. (30.5 cm)	12.0 in. (30.5 cm)	11.8 in. (30.0 cm)
Width	16.5 in. (41.9 cm)	21.5 in. (54.6 cm)	21.5 in. (54.6 cm)
Weight (dry)	26.0 lb (11.8 kg)	39.0 lb (17.7 kg)	52.0 lb (23.6 kg)
Clean Pressure Drop	1.7 PSI (11.7 kPa)	1.7 PSI (11.7 kPa)	2.5 PSI (17.2 kPa)
Maximum Pressure[1]	25 PSI (1 bar)	25 PSI (1 bar)	25 PSI (1 bar)
Water (per bowl) Capacity:	10.3 oz (305 ml)	10.3 oz (305 ml)	10.3 oz (305 ml)
Available Options:[2] **(water detection kit)** **(12 or 24 vdc heater)** **(vacuum gauge)**	 Yes Yes Yes	 Yes Yes Yes	 Yes Yes Yes
H_2O Removal Efficiency	99%		
Operating Temperature	-40° to +255°F / -40° to +124°C		

[1]Pressure installations are applicable up to the maximum PSI shown. Vacuum installations are recommended.
[2]Not for use on gasoline applications. **Note:** Units with 1/2´´ NPT ports are available, contact the factory.

Turbine Series

How to Order

(The example below illustrates how part numbers are constructed.)

731000FH	312	2
Base model with 7/8´´-14 UNF fuel ports (SAE J514).	Add **312** for a 12 volt dc heater or **324** for a 24 volt dc heater[1]. (omit if not desired)	Specify a micron rating: **2**, **10**, or **30**.
[1] 300 watt heater, use with a Racor relay kit - see Accessories.		

Replacement Elements (seals included)		
2 micron (Final Filtration)	10 micron (Secondary Filtration)	30 micron (Primary Filtration)
2020SM-OR	2020TM-OR	2020PM-OR

Note: 731000FH assemblies use TWO elements (one per 1000FH housing).

Not all configurations are available - contact Technical Support for more information.

Mounting Instructions

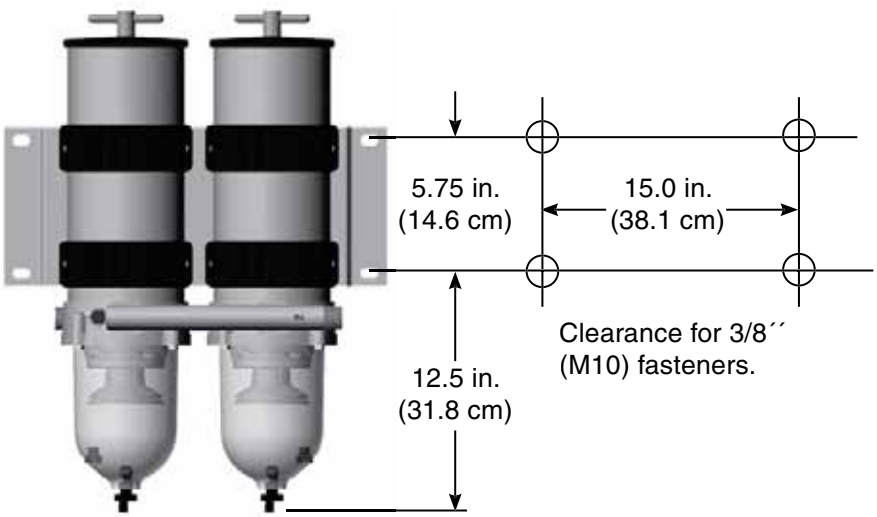

Questions? Contact Technical Support:
800 344 3286 or 209 521 7860 ext. 7555
e-mail: racortech@parker.com

Turbine Series

Replacement Parts

731000FH

	Part Number	Description
1.	**1000FH**	See 1000FH Replacement Parts List
2.	**11065**	Main Bracket
3.	**RK 11815-103**	Housing Bracket (includes hardware)
4.	**RK 11892**	Inlet or Outlet Manifold Tube (with 3/4´´-16 NPT threads)

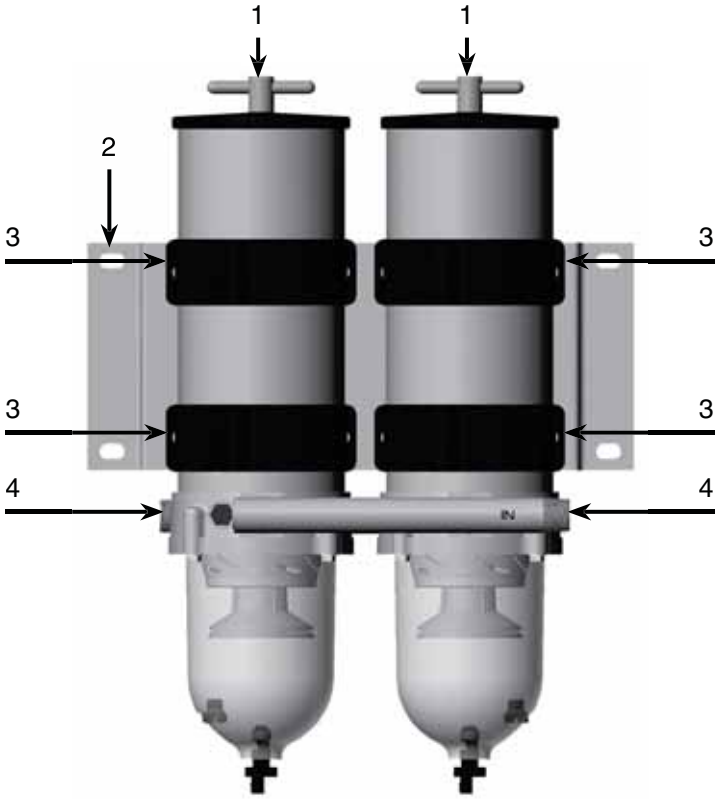

Turbine Series

How to Order

(The example below illustrates how part numbers are constructed.)

771000FH	312	2
Base metal with 1´´-11 1/2 NPT fuel ports (SAE J476).	Add **312** for a 12 volt dc heater or **324** for a 24 volt dc heater[1]. (omit if not desired)	Specify a micron rating: **2**, **10**, or **30**.
[1] 300 watt heater, use with a Racor relay kit - see Accessories.		

Replacement Elements (seals included)		
2 micron (Final Filtration)	10 micron (Secondary Filtration)	30 micron (Primary Filtration)
2020SM-OR	2020TM-OR	2020PM-OR

Note: 771000FH assemblies use THREE elements (one per 1000FH housing).

Not all configurations are available - contact Technical Support for more information.

Mounting Instructions

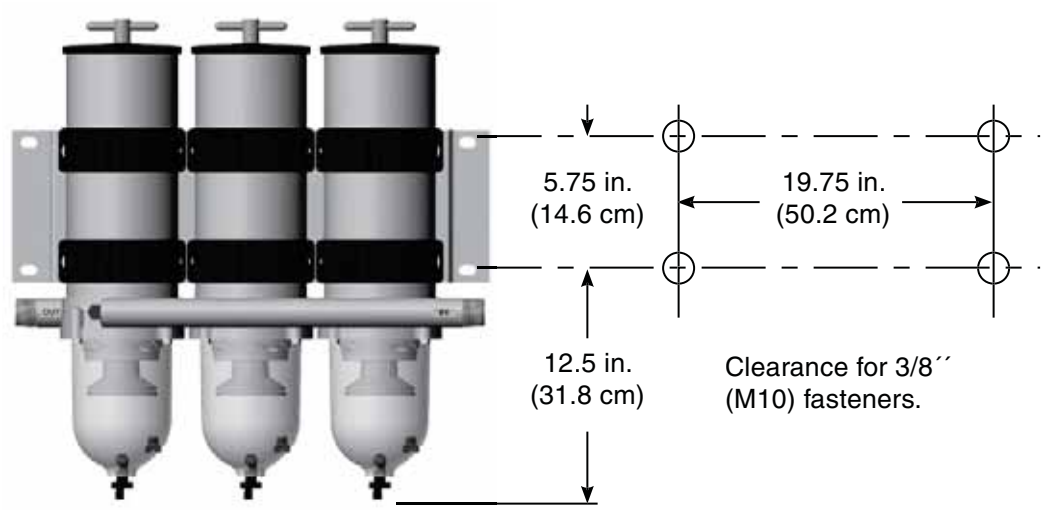

Questions? Contact Technical Support:
800 344 3286 or 209 521 7860 ext. 7555
e-mail: racortech@parker.com

Turbine Series

Replacement Parts

771000FH

	Part Number	Description
1.	**1000FH**	See 1000FH Replacement Parts List
2.	**18998**	Main Bracket Kit
3.	**RK 11815-103**	Housing Bracket (includes hardware)
4.	**11076**	Inlet or Outlet Manifold Tube (with 1´´-11 1/2 NPT threads)

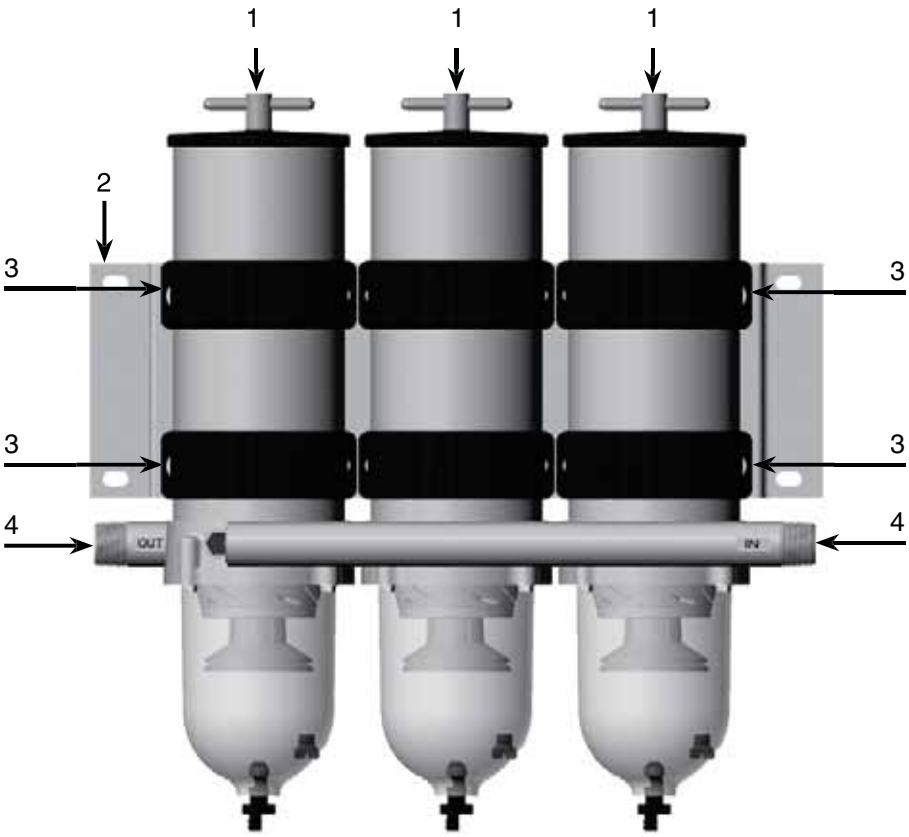

Turbine Series

How to Order

(The example below illustrates how part numbers are constructed.)

791000FHV	312	2
Base model with 3/4´´-14 NPT fuel ports (SAE J476).	Add **312** for a 12 volt dc heater or **324** for a 24 volt dc heater[1]. (omit if not desired)	Specify a micron rating: **2**, **10**, or **30**.
[1] 300 watt heater, use with a Racor relay kit - see Accessories.		

Replacement Elements (seals included)		
2 micron (Final Filtration)	10 micron (Secondary Filtration)	30 micron (Primary Filtration)
2020SM-OR	2020TM-OR	2020PM-OR

Note: 791000FHV assemblies use THREE elements (one per 1000FH housing).

Not all configurations are available - contact Technical Support for more information.

Mounting Instructions

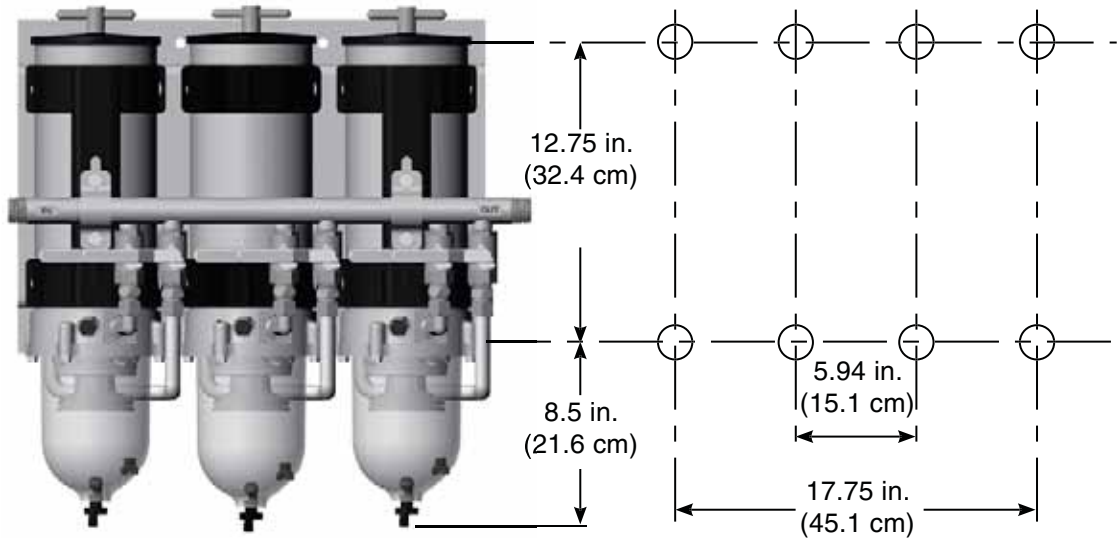

Questions? Contact Technical Support:
800 344 3286 or 209 521 7860 ext. 7555
e-mail: racortech@parker.com

Turbine Series

Replacement Parts

791000FHV

	Part Number	Description
1.	**11-1632**	Main Bracket
2.	**11895**	Clamp Bracket Kit
3.	**11-1761**	‘U’ Bracket Kit
4.	**19460**	Inlet Manifold Kit
5.	**1000FH**	See 1000FH Replacement Parts List
6.	**19461**	Outlet Manifold Kit
7.	**RK 11073**	1/2´´ Ball Valve Kit
8.	**11-1626**	Formed Tubing Kit

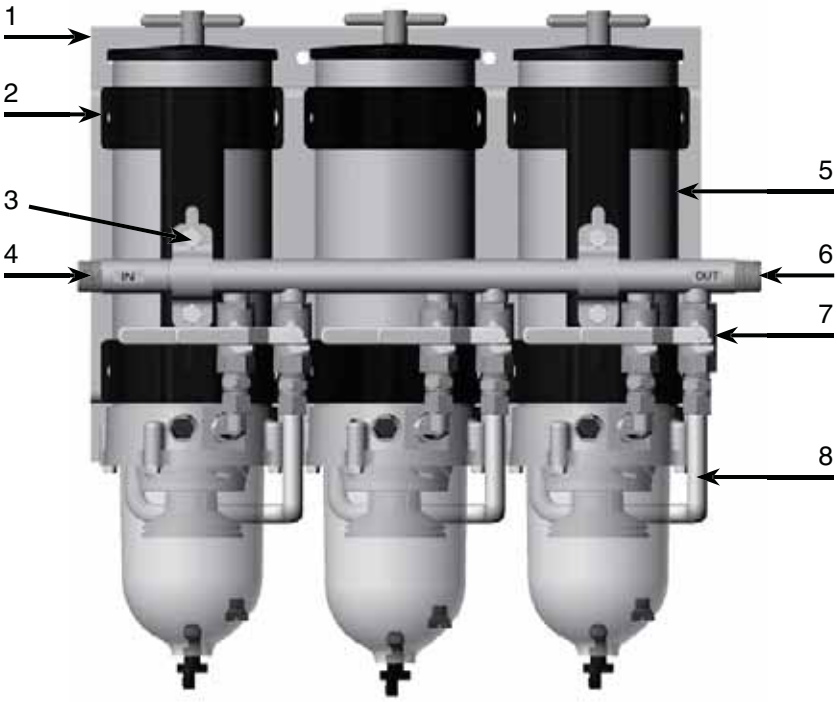

Turbine Series

Troubleshooting

New filter installations must be filled with fuel and the fuel system must be adequately primed following the engine manufacturer's recommendations. Existing installation difficulties are usually associated with improper priming procedures or damage to the unit or fuel system. The result is either internal air suction or external fuel leakage. Diagnose with the following steps:

1. **Check fuel tank level and verify fuel delivery valves are open.**
2. **Verify T-handle, bowl fasteners and fuel fittings are tight and bowl drain is closed.**
3. **If element is new, check potential restriction at fuel tank draw tube. An in-tank strainer may be plugged.**
4. **Review other troubleshooting instructions to uncover other solutions.**

Correct external fuel leaks immediately! These conditions result in reduced engine performance such as: hard starting, stalling, reduced power and fire hazards.

Correct Application

It is very important that Turbine Series filter assemblies are not 'under specified' for the application. The maximum fuel flow rating of the filter assembly must not be exceeded; doing so will reduce efficiency and de-gas (pull air from) the fuel.

Filter Elements

Replacement elements are available in 2, 10 and 30 micron ratings (nominal). Filtration needs are based on application, fuel quality, maintenance schedules and operating climates. A simple rule to remember is... the finer the filtration, the more frequent the filter change interval.

Always carry extra replacement elements with your equipment as one tankful of excessively contaminated fuel can plug an element quickly.

When clogged to maximum capacity, elements will have a brown to black color or tar like contaminants may be present - this is normal. An appearance of a multi-colored slime (which may have a foul odor) is an indication of microbiological contamination. This condition must be treated immediately. Racor offers a wide variety of gasoline and diesel additives to prevent and treat these problems; see 'Additives' section of this catalog. Severe conditions must be corrected by a repair facility.

Never operate a filter assembly without the element in place. The element safety valve on the fuel return tube will not expose the outlet hole if the element is removed. Instead, punch the emergency tab on the top of the element and leave in place.

Warning! Puncturing the emergency tab will bypass all filtration and send unfiltered fuel to your engine. Service the element as soon as possible to avoid harmful contaminants flowing downstream to the engine.

Water Sensors

This feature alerts the operator of a high-water condition. The bowl must be drained of water at the earliest convenience. A Racor water detection module is needed to work with the in-bowl sensor. The unit should activate when the water reaches the sensor tips (and when they measure below 47,000 or 100,000 ohms of resistance, depending on the detection module used). If not, the tips may be fouled with a coating. Remove the sensor and clean the tips with a cloth. Run a jumper wire between the tips with the ignition ON to test the system. Difficulties usually lie in the wire connections, power source, or an independent ground.

Heaters

In-filter heaters are starting aids only, but may be left on during cold operations to supply additional heat. The 150 and 300 watt heaters are an extremely reliable option, but MUST be powered via a relay switch due to the initial amperage surge at start-up: 25 amps at 12 vdc and 12.5 amps at 24 vdc. They do not activate unless the fuel is below 50°F (10°C) and automatically deactivate at 80°F (28°C).

Heater Testing

The heater can only be tested when the thermostat is closed (fuel temperature is below 50°F or 10°C). With a voltmeter attached to external wiring, and engine off, power should drop when heater is switched on. (Option - remove the heater and place in a freezer until the temperature is under 50°F (10°C). Remove the heater and repeat the above test).

Turbine Series

Troubleshooting

All Racor Turbine Series filters are 100% tested to ensure a leak-proof, quality product.

Apply Parker Super O-lube (part number RK31605) or equivalent to all seals at major attachment points to maintain integrity, seal elasticity, to fill small voids and provide protection from degradation. Perform the following checks with the engine OFF (and applicable valves closed). For replacement parts, refer to the appropriate 'Replacement Parts' section of this catalog.

Damaged, worn, or dirty seals will allow air ingestion. Inspect and replace all seals as needed. Lube all seals with Parker Super O-Lube. Clean sealing surfaces thoroughly of dirt and debris every time an element is replaced.

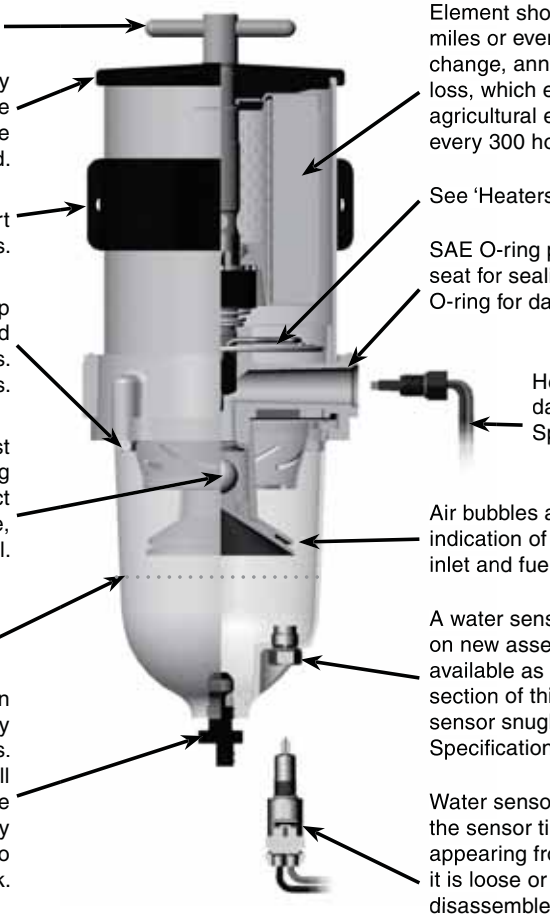

Hand tighten T-handle; do not use tools!

If element is changed or assembly drained for any reason, repriming assembly (filling with fuel) may be necessary. Fill to just above top of element before replacing lid.

Do not overtighten carriage bolt as this may distort cylinder roundness.

Do not overtighten self-taping screws; this may strip the threads. After disassembly, start screws by hand prior to using tools. Specifications: 55-65in. lbs.

The hollow aluminum check-ball floats up against the seal when the fuel is stopped thus preventing fuel bleed-back. If your unit looses prime, inspect upstream hose connections first, otherwise, disassemble the unit and inspect the seal and ball.

Drain water before it reaches this level.

Air bubbles or fuel leakage appearing from drain may indicate that the drain is not closed completely or that a seal has been clogged with contaminants. Tighten drain and inspect. If self-venting drain will not work when opened, it may be clogged. Cycle drain (open close) or attach a hose and briefly apply air (<2-3 PSI, with T-handle and lid removed) to dislodge any contaminates that may be stuck.

Element should be replaced every 10,000 miles or every 500 hours, or every other oil change, annually, or at first indication of power loss, which ever comes first. Construction and agricultural equipment should change element every 300 hours.

See 'Heaters' on previous page.

SAE O-ring ports should have a smooth angled seat for sealing. Do not scratch surface. Check O-ring for damage. Replace if necessary.

Heater feed-thru O-ring must not be damaged or swollen. Tighten snugly. Specifications; 15-20 in. lbs.

Air bubbles appearing from turbine are an indication of an upstream leak between Racor inlet and fuel tank pick-up tube.

A water sensor plug is standard equipment on new assemblies. Water sensor kits are available as accessories; see 'Accessories' section of this catalog. Tighten plug or water sensor snugly.
Specification; 15-20 in. lbs.

Water sensors activate when water contacts the sensor tips. Air bubbles or fuel leakage appearing from sensor area may indicate that it is loose or O-ring is damaged. Tighten or disassemble and inspect. Specification; 15-20 in. lbs.

Turbine Series

Test Data

500FG

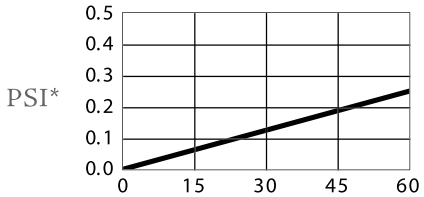

Flow (GPH)
SAE J905 Fuel Restrition

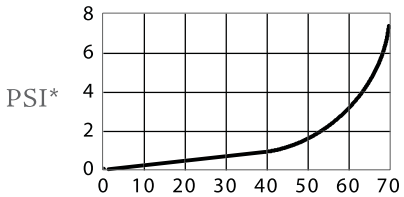

Grams
SAE J905 Solids Capacity
(using SOFTC-2A; 2010TM Element)

900FH

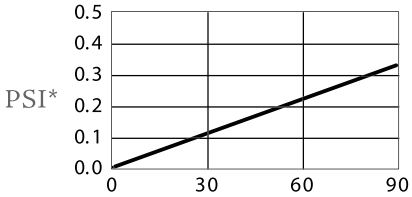

Flow (GPH)
SAE J905 Fuel Flow Restriction

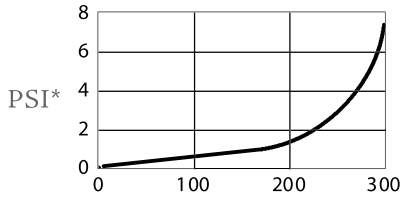

Grams
SAE J905 Solids Capacity
(using SOFT-2A; 2040TM Element)

1000FH

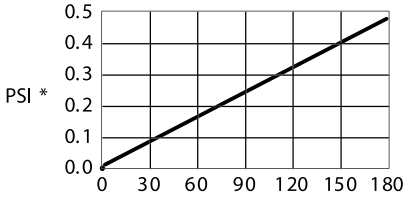

Flow (GPH)
SAE J905 Fuel Flow Restriction

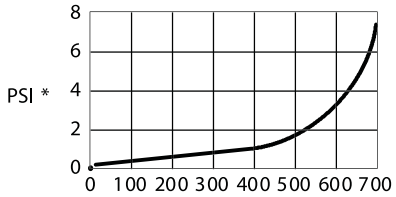

Grams
SAE J905 Solids Capacity
(using SOFT-2A; 2020TM Element)

(Controlled laboratory test. Field results may vary.)

(PSI X 2.036 = inHg) (PSI X 6.895 = kPa)

Questions? Contact Technical Support:
800 344 3286 or 209 521 7860 ext. 7555
e-mail: racortech@parker.com

Electric Primer Pump Kit

Electric Primer Pump Kit

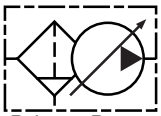

The electric primer kit can be retrofitted to many of the Racor 900 or 1000 series fuel filters already in service. The filter pump is an innovative and proprietary system consisting of a pre-screen filter, a flow bypass circuit and a roller cell pump powered by a 12 vdc motor or innovative 24 vdc Racor brushless motor.

When the switch is activated the fuel is drawn into the pre-screen and then pumped through the housing, refilling the unit with fuel.

When not in use the filter pump system is bypassed and the Racor fuel filter/water separator functions normally.

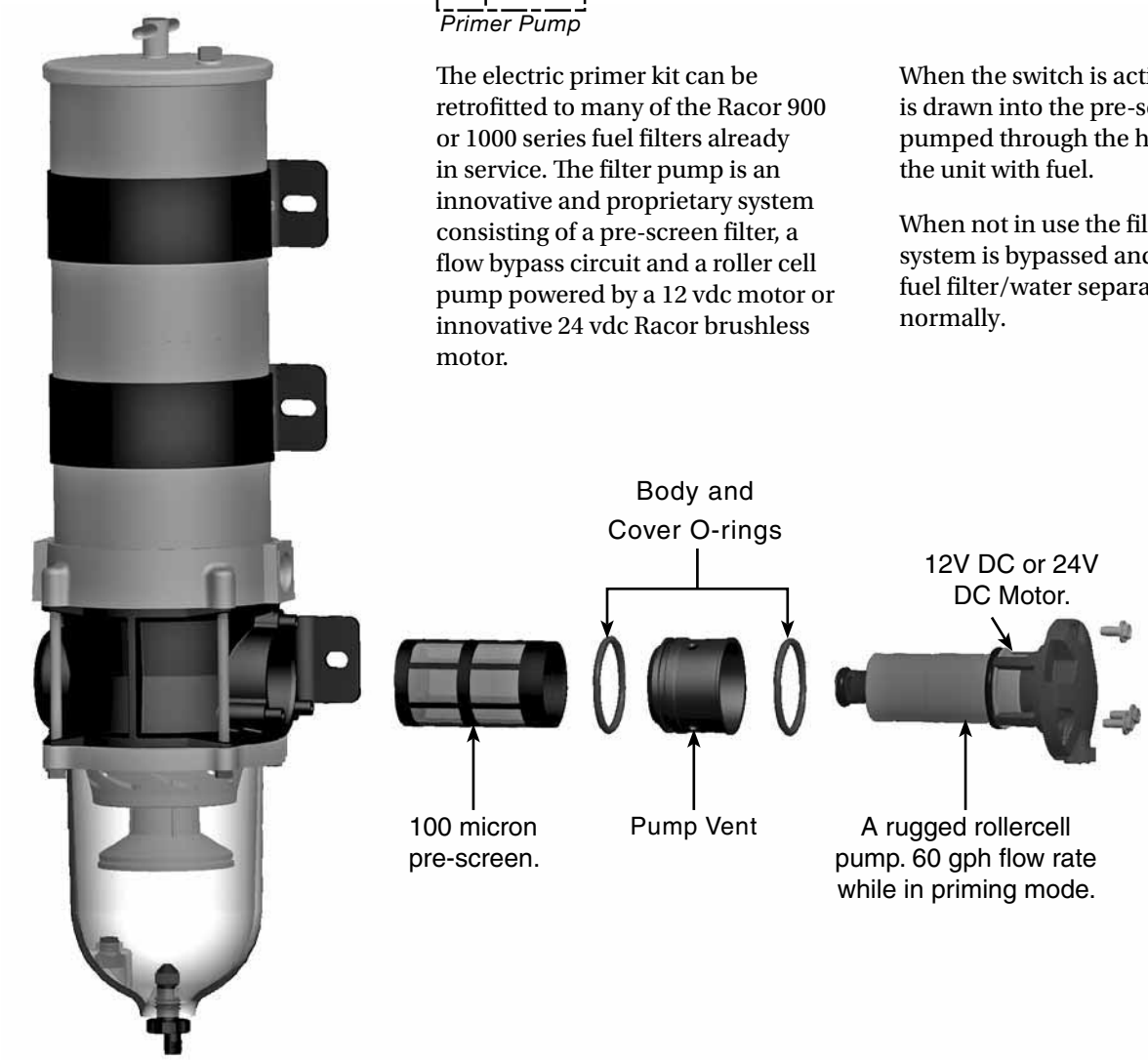

All Racor filter materials and seals are compatible with ultra-low sulphur diesel (ULSD) fuel and B2 to B20 Biodiesel.

The **RKP1912**, 12 vdc Kit, contains a traditional brushed motor design.

The **RKP1924**, 24 vdc Kit, contains innovative brushless motor technology.

The use of this primer pump kit allows the operator to easily re-prime the Racor Filter/Water Separator directly from the fuel storage tank with no mess.

Turbine Series

Test Data

75500FGX

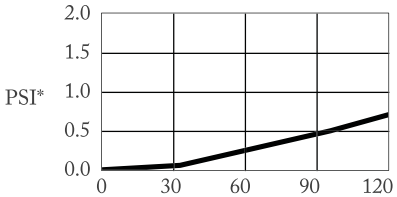

Flow (GPH)
SAE J905 Fuel Flow Restriction

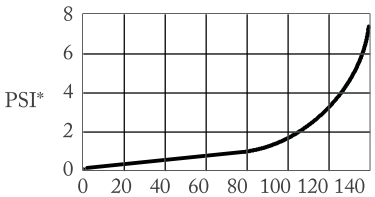

Grams
SAE J905 Solids Capacity
(using SOFT-2A; 2010TM Element)

75900FHX

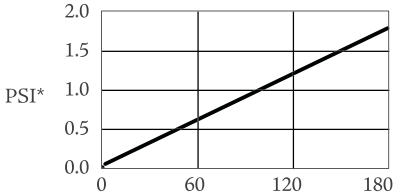

Flow (GPH)
SAE J905 Fuel Flow Restriction

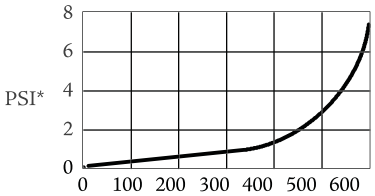

Grams
SAE J905 Solids Capacity
(using SOFT-2A; 2040TM Element)

751000FHX

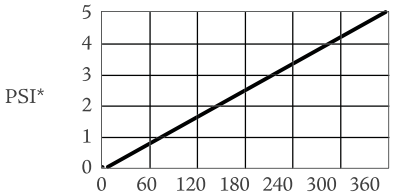

Flow (GPH)
SAE J905 Fuel Flow Restriction

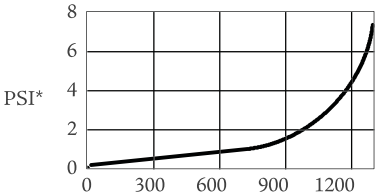

Grams
SAE J905 Solids Capacity
(using SOFT-2A; 2020TM Element)

(Controlled laboratory test. Field results may vary.)

(PSI X 2.036 = inHg) (PSI X 6.895 = kPa)

Questions? Contact Technical Support:
800 344 3286 or 209 521 7860 ext. 7555
e-mail: racortech@parker.com

Turbine Series

Test Data

731000FH

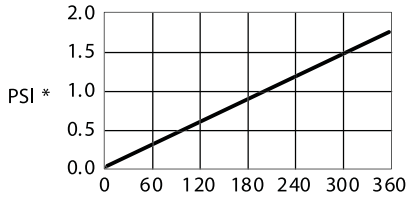

Flow (GPH)
SAE J905 Fuel Flow Restriction

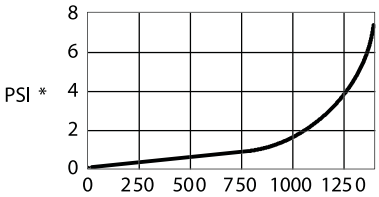

Grams
SAE J905 Solids Capacity
(using SOFT-2A; 2020TM Element)

771000FH

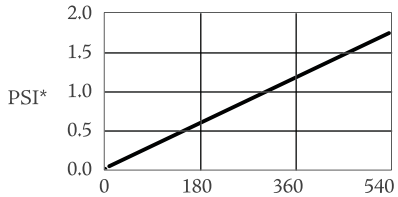

Flow (GPH)
SAE J905 Fuel Flow Restriction

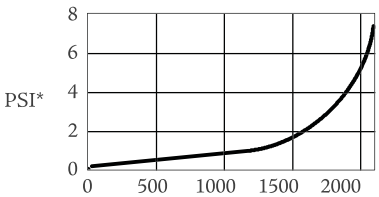

Grams
SAE J905 Solids Capacity
(using SOFT-2A; 2020TM Element)

791000FHV

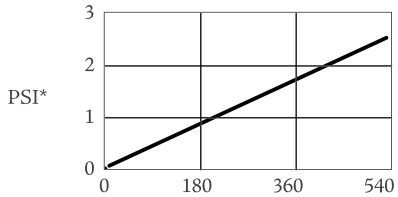

Flow (GPH)
SAE J905 Fuel Flow Restriction

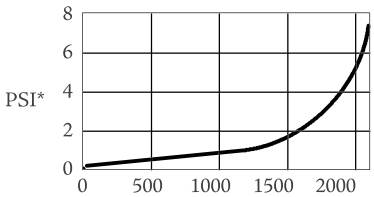

Grams
SAE J905 Solids Capacity
(using SOFT-2A; 2020TM Element)

(Controlled laboratory test. Field results may vary.)

(PSI X 2.036 = inHg) (PSI X 6.895 = kPa)

Filterpumps

Smart Pumps

Instant Fuel Flow at "Key On" – Automitic Priming, No More Hard Starts

ADVANCED DSP CONTROLLER TECHNOLOGY

The Racor sensorless Digital Signal Processor (DSP) controller allows for precise fuel flow management and diagnostics tailored to customer specifications using flexible software routines. Precision control of fuel flow, current draw, motor rpm, and system pressure is possible using the internal DSP and/or with input from the Electronic Control Unit (ECU). DSP technology provides peripheral capabilities such as fault isolation and reporting of critical system parameters – in short, total fuel management for optimum engine performance.

- **Fixed speed operation – flow does not vary with load**
- **Variable speed operation – controlled by input signal from ECU**
- **Built-in test and diagnostics with output signal capability**

GEROTOR PUMP

Racor's advanced gerotor pump uses the same proven technology used in lubrication pumps in the aircraft industry. It offers the benefits of fewer parts, smaller size, and lighter weight than other pumps of the same capacity.

- **Fewer parts than gear or vane-style pumps**
- **Smaller size and lighter weight than pumps with the same capacity**
- **Greater contamination resistance**
- **Proven aerospace design**
- **2 lpm to 4 lpm possible at 60 psi**

BRUSHLESS DC MOTOR

Most electric DC motors use carbon "brushes" to conduct the electrical current to the "commutator" that serves to sequentially polarize the motor windings and induce rotation. Racor's brushless DC motor windings are sequentially polarized to rotate the pump shaft by high speed electronic switching, controlled by a DSP, not by brushes rubbing and making sparks on a metallic commutator. No brushes means nothing to wear out, and no possibility of brush debris in the fuel. Brushless motors are more efficient than brushed motors and have unsurpassed reliability and long life. The brushless motor's shaft directly drives the gerotor gear, creating a unique, positive displacement pump assembly.

- **Design proven up to 26V DC, 10A continuous power**
- **Resistant to vibration and can be engine mounted**
- **8-pole, 9-slot configuration**
- **Rotor: cylindrical magnet and rotor**
- **Rotor rotates outside stator**

Whether the fuel filter/water separator is frame or engine-mounted, Racor brushless filter pumps offer the industry's most advanced and robust electronic fuel management systems. Important system benefits include the possibility of variable flow fuel delivery and monitoring of the entire fuel system...even when the engine is not running. No more fuel leak-back issues, no more hard starts. This is the next generation of fuel management and conditioning, for the next generation of diesel engines.

ELECTRONIC CONTROLLER

With DSP controller technology, engine operating specifications can be met with flexible software routines, instead of costly hardware re-designs. Current, velocity, and pressure parameters can be programmed with greater precision.

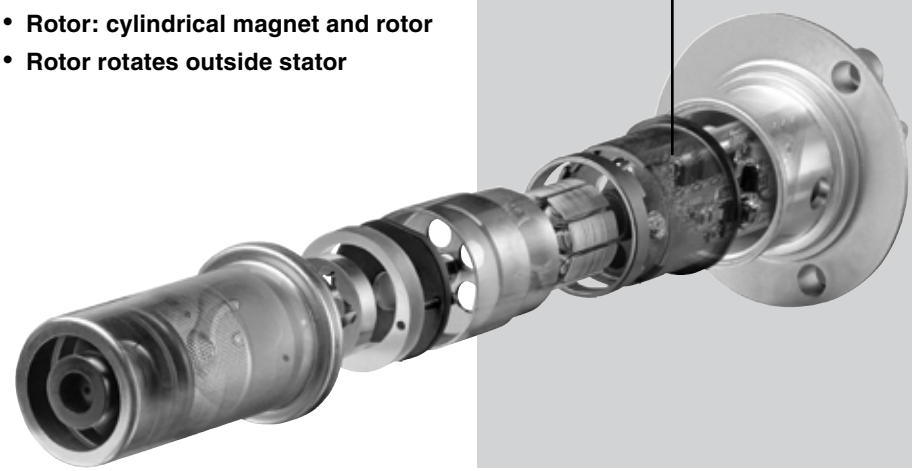

Questions? Contact Technical Support:
800 344 3286 or 209 521 7860 ext. 7555
e-mail: racortech@parker.com

Filterpumps

P Series

Fuel Conditioning Modules

The patented P Series diesel fuel conditioning module was developed for installation on any diesel engine fuel injection system. P Series assemblies are available in three sizes and all feature 3/8" NPT fuel ports. This innovative and modular fuel filter/water separator incorporates low-pressure fuel system components into a single package. The P Series Diesel Fuel Conditioning Module is available with a brushless pump. Please contact Racor Division for information on specific applications.

Product Features:

- **Durable, quiet 12V DC roller-cell electric fuel pump for intermittent or continuous duty.**
- **Thermostatically controlled PTC-style electric (150-watt) heater.**
- **Aquabloc®II Filter Technology**
- **Removable and reusable contaminant collection bowl.**
- **Water-in-fuel (WIF) sensor.**
- **Standard: 12V DC brushed pump motor.**

  Optional: 12V or 24V DC brushless pump motor.

Questions? Contact Technical Support:
800 344 3286 or 209 521 7860 ext. 7555
e-mail: racortech@parker.com

Parker Racor

Filterpumps

Specifications

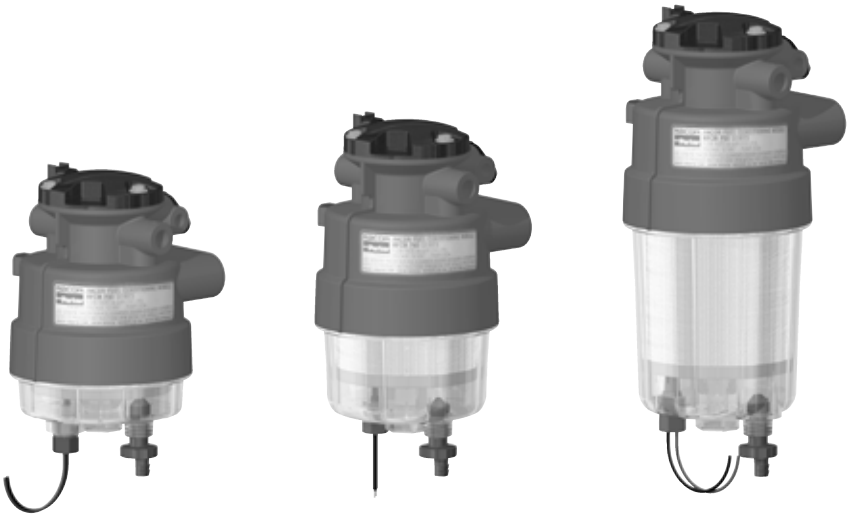

	P3	P4	P5
Max. Flow Rate	30 GPH / 114 LPH	40 GPH / 170 LPH	50 GPH / 227 LPH
Clean Pressure Drop	0.4 psi / 2.8 kPa	0.5 psi / 3.4 kPa	0.8 psi / 5.5 kPa
Max. Pump Output at 14 volts / 70 psi (480 kPa) / 6.2 amps	40 GPH / 151 LPH		
Pump Output Pressure	10 to 70 psi (60 kPa to 480 kPa)		
Standard Fuel Port Size (SAE J476)	3/8” – 18 NPT		
Biodiesel Compatible	B2 to B20		
Replacement Filters **2 micron** **10 micron** **30 micron**	 R58060-2 R58060-10 R58060-30	 R58095-2 R58095-10 R58095-30	 R58039-2 R58039-10 R58039-30
Min. Service Clearance	2.5” (28 mm)		
Height	7.7” (196 mm)	9.0” (229 mm)	11.5” (292 mm)
Depth	5.2” (132 mm)		
Width	4.8” (122 mm)		
Weight (dry)	3.4 lb (1.5 kg)	3.8 lb (1.7 kg)	4.2 lb (1.9 kg)
Features:[1] **Water Sensor** **Heater** **Pressure Regulator (10 psi)**	 Standard Standard Standard		
Operating Temperature	-40° to +255°F / -40° to +121°C		

[1] Not for use with gasoline applications.

Questions? Contact Technical Support:
800 344 3286 or 209 521 7860 ext. 7555
e-mail: racortech@parker.com

Filterpumps

Installation Diagram

Optional Bypass Installation and Operation (Allows user to service filter without shutting down engine.)			
Valves	1	2	3
Unit On-line	Open	Open	Closed
Unit Off-line	Closed	Closed	Open

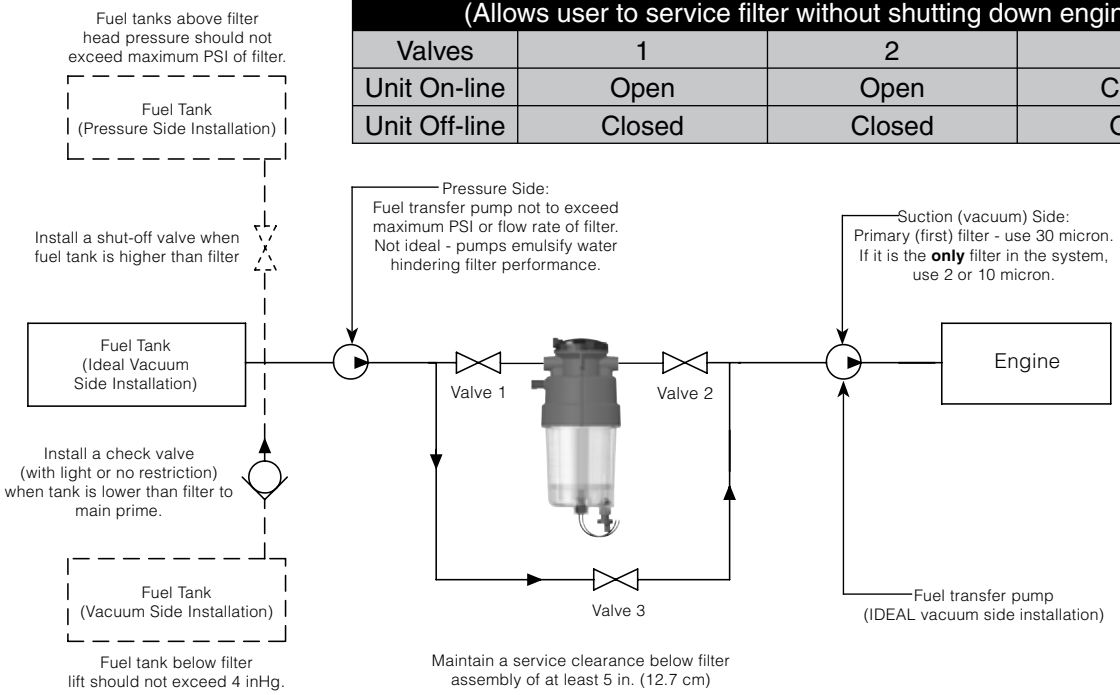

Mounting & Port Information

Keep all fuel lines and flow restrictions to a minimum.

Use maximum size fuel hose possible.

Do not use two 45° fittings where one 90° elbow will work.

Avoid sharp bends, surfaces that move, sharp edges, or hot areas such as exhaust piping.

Use 3/8″ mounting hardware.

Mount filter vertically.

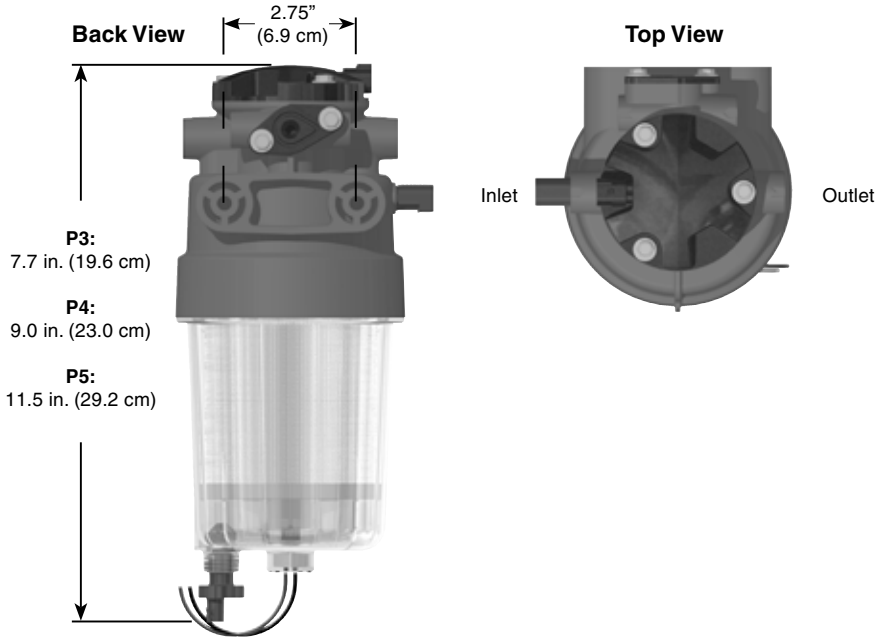

Filterpumps

P Series Replacement Parts

Part No.		Description
1.	**RK58075**	Pressure Regulator
2.	**Replacement Filters**	See Chart Below - includes B
3.	**58179** **58180** **58181**	Clear Bowl (P3) - includes C, 4, 5 Clear Bowl (P4) - includes C, 4, 5 Clear Bowl (P5) - includes C, 4, 5
4.	**RK30476**	Drain Valve Kit
5.	**RK21069**	Water Probe Kit

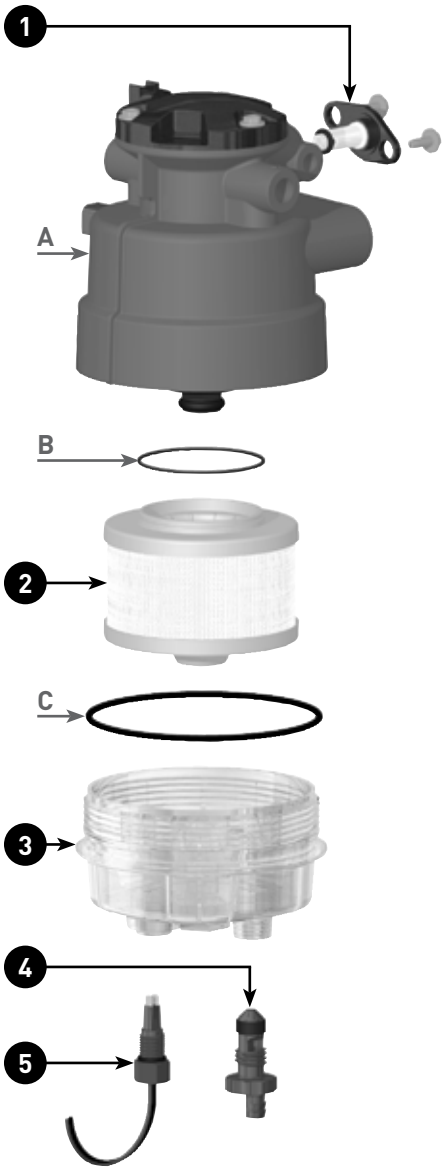

Replacement Filters

	P3	P4	P5
2 Micron	R58060-02	R58095-02	R58039-02
10 Micron.	R58060-10	R58095-10	R58039-10
30 Micron	R58060-30	R58095-30	R58039-30

Addtional Parts

Part No.	Description
RK58107	6-way Electrical Harness Kit
58137	Mating Connector Harness
58132	Under-dash Control Panel

Questions? Contact Technical Support:
800 344 3286 or 209 521 7860 ext. 7555
e-mail: racortech@parker.com

Filterpumps

Spin-On Series With Electric Priming

The Racor 700 Series is equipped with state-of-the-art fuel pumps with either brush or brushless DC motors. In brushless versions, the motor shaft directly drives the gerotor, creating a unique, positive displacement pump. The gerotor has fewer parts than gear or vane pumps, and the sensorless control technology of the brushless DC motor make this product the most reliable filter and pump assembly on the market. The brushless pump assembly is ideal for tough on-engine applications. For off-engine mounting, brushed pumps are a more economical alternative.

The 700 Series Integrated Fuel Filter/Water Separators have a two-stage filtration and repriming system featuring a 12 or 24 volt solid-state controlled electronic priming pump, a vent valve to purge air, a 100 micron prefilter screen, a 10 or 30 micron Aquabloc®II Spin-On filter (see specifications), a water sensor probe, a clear collection bowl and a weather proof control box. This complete fuel management system isolates contaminants present in diesel fuels and traps them prior to reaching the fuel injection system, protecting against costly and premature failure.

Product Features:

- **12 or 24 volt Priming Pump**
- **100 micron prefilter screen**
- **Aquabloc®II Filter Technology**

Questions? Contact Technical Support:
800 344 3286 or 209 521 7860 ext. 7555
e-mail: racortech@parker.com

Parker Racor

Filterpumps

Filterpumps Overview

Models shown with factory installed filter elements

	745R30	760R30	790R30	790R3024
Power	12 volt	12 volt	12 volt	24 volt
Max. Flow Rate	45 GPH (170 LPH)	60 GPH (227 LPH)	90 GPH (341 LPH)	90 GPH (341 LPH)
Port Size (SAE J1926)	7/8”-14 UNF	7/8”-14 UNF	7/8”-14 UNF	7/8”-14 UNF
Height	10.8 in. (27.4 cm)	11.8 in. (29.9 cm)	12.8 in. (32.5 cm)	12.8 in. (32.5 cm)
Width	4.3 in. (11.0 cm)	4.3 in. (11.0 cm)	4.3 in. (11.0 cm)	4.3 in. (11.0 cm)
Depth	6.5 in. (16.5 cm)	6.5 in. (16.5 cm)	6.5 in. (16.5 cm)	6.5 in. (16.5 cm)
Weight (dry)	5.5 lb (2.5 kg)	5.7 lb (2.6 kg)	5.9 lb (2.7 kg)	6.5 lb (3.0 kg)
Clean Pressure Drop	0.70 PSI (4.8 kPa)	0.70 PSI (4.8 kPa)	0.70 PSI (4.8 kPa)	0.70 PSI (4.8 kPa)
Ambient Temp. Range	-40° to +250°F (-40° to +121°C)			
Max. Fuel Temp.	190°F (88°C)			

Models shown with factory installed filter elements

	7125R10	7125R1024	7125R30	7125R3024
Power	12 volt	24 volt	12 volt	24 volt
Max. Flow Rate	120 GPH (455 LPH)	120 GPH (455 LPH)	120 GPH (455 LPH)	120 GPH (455 LPH)
Port Size (SAE J1926)	7/8”-14 UNF	7/8”-14 UNF	7/8”-14 UNF	7/8”-14 UNF
Height	15.2 in. (38.5 cm)	15.2 in. (38.5 cm)	15.2 in. (38.5 cm)	15.2 in. (38.5 cm)
Width	4.3 in. (11.0 cm)	4.3 in. (11.0 cm)	4.3 in. (11.0 cm)	4.3 in. (11.0 cm)
Depth	6.5 in. (16.5 cm)	6.5 in. (16.5 cm)	6.5 in. (16.5 cm)	6.5 in. (16.5 cm)
Weight (dry)	6.9 lb (3.1 kg)	6.9 lb (3.1 kg)	6.9 lb (3.1 kg)	6.9 lb (3.1 kg)
Clean Pressure Drop	0.70 PSI (4.8 kPa)	0.70 PSI (4.8 kPa)	0.70 PSI (4.8 kPa)	0.70 PSI (4.8 kPa)
Ambient Temp. Range	-40° to +250°F (-40° to +121°C)			
Max. Fuel Temp.	190°F (88°C)			

Filterpumps

Replacement Parts

12 Volt Parts	Description		
1. RK22895	Replacement Pump Head with Pump		
2. RK22933	Primer Pump Kit (Includes pump, o-rings, screws, prescreen element and more. Does NOT include mounting head.)		
3. RK22902	Wire Harness Kit		
4. RK22943	Control Panel Kit		
5. RK 22798	Bypass Valve Kit		
6. RK 21501	Gasket Kit (Includes #'s 6 and 8)		
7. (see below)	Replacement Elements		
Model	2 Micron	10 Micron	30 Micron
745R	R45S	R45T	R45P
760R	R60S	R60T	R60P
790R	R90S	R90T	R90P
7125R	R125S	R125T	R125P
8. RK 21501	Gasket Kit (Includes #'s 6 and 8)		
9. RK 21113-13-11	Clear Bowl Kit (Includes #'s 8 and 10)		
10. RK 30476	Self-venting Drain Kit		
11. RK 30902	Water Sensor Probe Kit		
Additional Parts (not shown) RK11-1970 RK22934	Port Plug Kit Prescreen Element Kit (100 micron)		

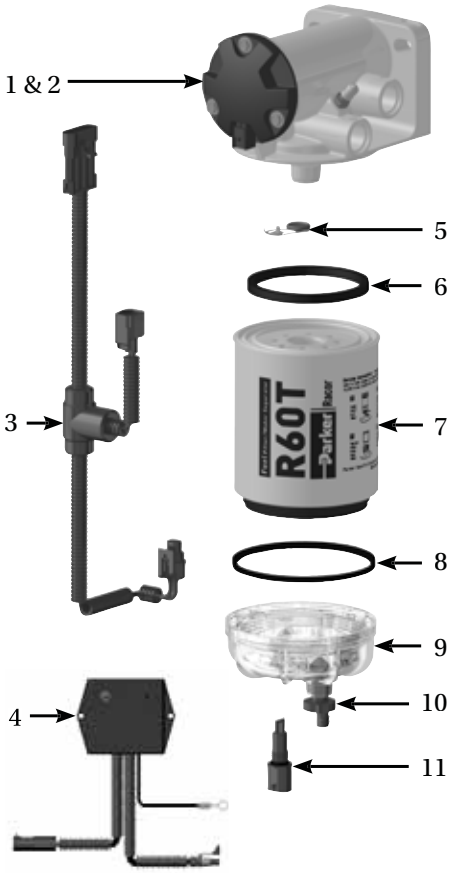

Filterpumps

24 Volt Parts	Description		
12. RK23085	Replacement Pump Head with Pump		
13. RK23087	Primer Pump Kit (Includes pump, o-rings, screws, prescreen element and more. Does NOT include mounting head.)		
14. RK23088	Push Button/Harness Kit		
15. RK 22798	Bypass Valve Kit		
16. RK 21501	Gasket Kit (Includes #'s 16 and 18)		
17. (see below)	Replacement Elements		
Model	2 Micron	10 Micron	30 Micron
790R	R90S	R90T	R90P
7125R	R125S	R125T	R125P
18. RK 21501	Gasket Kit (Includes #'s 16 and 18)		
19. RK 21113-13-11	Clear Bowl Kit (Includes #'s 19 and 20)		
20. RK 30476	Self-venting Drain Kit		
21. RK 30964	Water Sensor Probe Kit/Connector		
Additional Parts (not shown)			
RK11-1970	Port Plug Kit		
RK22934	Prescreen Element Kit (100 micron)		

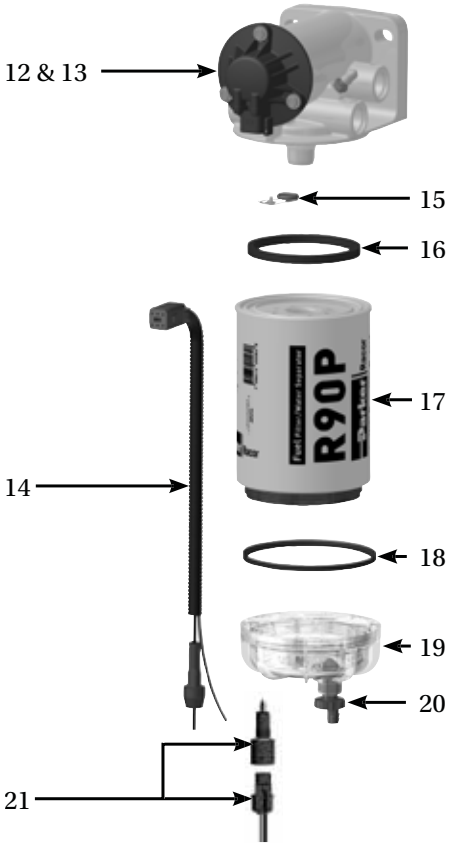

Questions? Contact Technical Support:
800 344 3286 or 209 521 7860 ext. 7555
e-mail: racortech@parker.com

Filterpumps

Installation & Maintenance

Please read ALL instructions before beginning installation.

Maintain a safe working environment. Obtain good ventilation and do not smoke or allow open flame near the installation.

The engine must be off and cool to touch before beginning installation.

This filter assembly will replace stand-alone primary fuel filters that may be installed on the engine. Remove existing primary filter, if applicable, and dispose of properly.

Apply thread sealant to fittings, lubricant to o-rings and install fittings into the appropriate inlet and outlet ports. Tighten snugly. Install port plugs in unused ports and tighten snugly.

Connect fuel hose to the inlet/outlet fittings and use hose clamps where appropriate.

Completely drain assembly. Tear-down is performed in numerical order shown above (1-8). Rebuild assembly in reverse order (8-1), substituting new parts for old. On rebuild, lubricate all O-rings with motor oil or clean diesel fuel and tighten screws to 50 in. lbs (maximum).

Important: Insure inside face of cover is flush with pump body and all flat surfaces are clean (free of scratches and debris).

Prescreen filter can be cleaned and inspected before replacement.

Clean in solvent bath with a soft brush. Flush with diesel fuel. Gently blow dry with air, if necessary.

Prime the system and check for leaks. Correct as necessary with engine off.

Operation For Repriming Unit:

(for initial installation, repriming, or to restart after running out of fuel).

1. **Turn ignition to ON position; do not start engine.**
2. **Remove cap from vent valve. Press and hold PRIME button on control panel; this will activate primer pump and yellow 'prime' LED will illuminate.**
3. **Press and hold vent valve open to release excess air from filter. Release vent valve at first indication of fuel. Warning! If vent valve is kept open too long, a pressurized stream of fuel will exit creating a potentially hazardous situation. Continue to hold PRIME button for about 30 seconds (or until unit is primed) and release. Note: fuel flow will bypass pump when not in use.**
4. **Start engine and run at high idle for about three minutes. Note: The engine may run rough while remaining air is forced through the fuel system.**

Draining Water:

Frequency of water draining or filter replacement is determined by the contamination level of the fuel. Drain bowl frequently if contaminated fuel is suspected or when remote water-in-fuel lamp illuminates.

Filter Replacement:

Replace filter every 10,000 miles, 500 hours, every other oil change, if power loss is noticed, or annually, whichever occurs first. Note: Always carry extra replacement elements as one tankful of excessively dirty fuel can plug a filter. To replace filter:

1. **Disconnect water sensor connector and drain any water from the see-thru bowl.**
2. **With a collection pan in place, remove filter and bowl assembly from mounting head.**
3. **Remove see thru bowl from filter and dispose properly. Bowl is reusable.**
4. **Lubricate gasket on new filter with motor oil or diesel fuel and spin new filter (without bowl) onto mounting head. Hand tighten only.**
5. **Clean bowl of debris. Lubricate new bowl O-ring, place in gland of bowl and spin bowl onto new filter. Hand tighten only.**
6. **Reattach water sensor connector.**
7. **Open fuel tank outlet valve, if applicable, and follow Operation instructions to reprime system.**

Filterpumps

Primer Pump Parts Breakdown

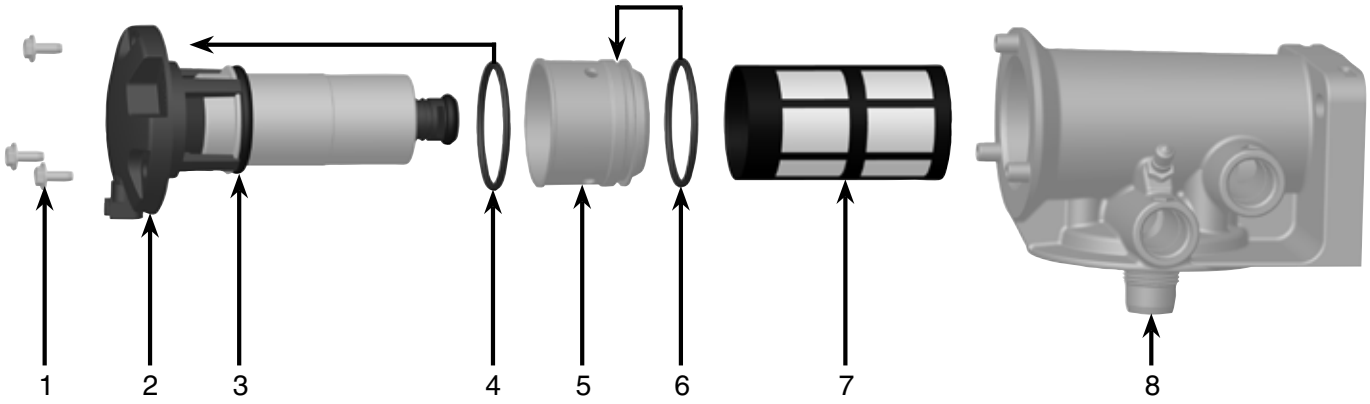

12 volt Primer Pump Kit Parts List	
1.	Screws
2.	Pump
3.	Body o-ring
4.	Pump/Head o-ring
5.	Adapter
6.	Adapter o-ring
7.	Prescreen Element
8.	Mounting Head
RK22895 Primer Head Kit (Includes all parts shown)	
RK22933 Primer Pump Kit (Includes numbers 1-7)	
RK22934 Prescreen Kit (Includes numbers 3-7)	

24 volt Primer Pump Kit Parts List	
1.	Screws
2.	Pump
3.	Body o-ring
4.	Pump/Head o-ring
5.	Adapter
6.	Adapter o-ring
7.	Prescreen Element
8.	Mounting Head
RK23085 Primer Head Kit (Includes all parts shown)	
RK23087 Primer Pump Kit (Includes numbers 1-7)	
RK22934 Prescreen Kit (Includes numbers 3-7)	

Filterpumps

Installation Diagram

Optional Bypass Installation and Operation (Allows user to service filter without shutting down engine.)			
Valves	1	2	3
Unit On-line	Open	Open	Closed
Unit Off-line	Closed	Closed	Open

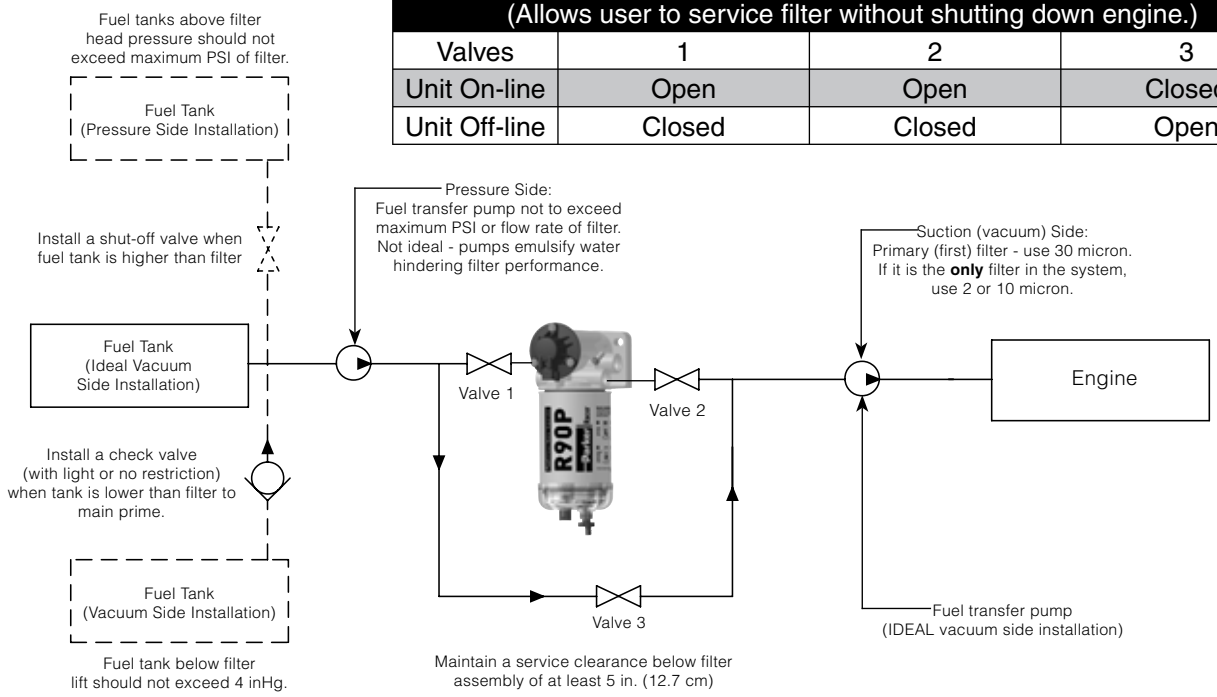

Mounting & Port Information

Keep all fuel lines and flow restrictions to a minimum.

Use maximum size fuel hose possible.

Do not use two 45° fittings where one 90° elbow will work.

Avoid sharp bends, surfaces that move, sharp edges, or hot areas such as exhaust piping.

Use 3/8″ mounting hardware.

Mount filter vertically on suction (vacuum) side of fuel transfer pump (or injection pump).

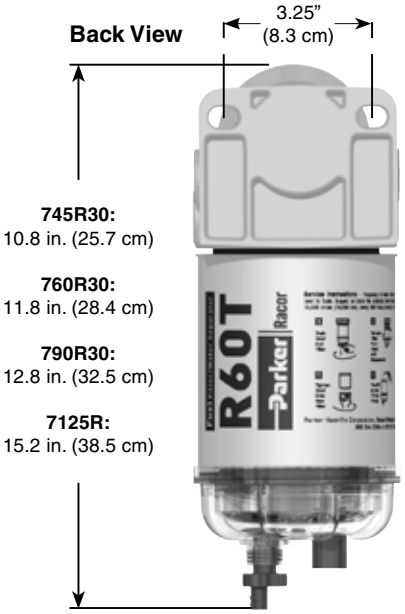

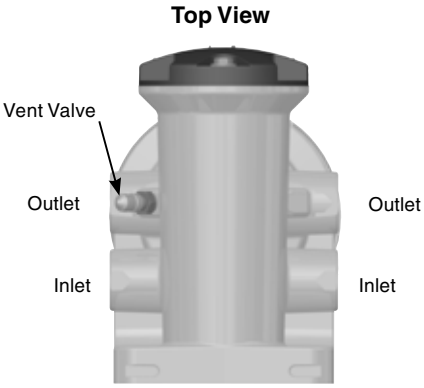

Filterpumps

Installing the Control Panel 12 Volt

1. **Monaco Connector:**
   (cut off if installing on any other application).
2. **Green Wire:**
   To remote warning light or cap off.
3. **Red Wire:**
   To 7.5 amp fuse, then to +12 volt dc power.
4. **Black Wire:**
   To ground.
5. **To Filter Connector.**

Install control panel in engine compartment. Mount control panel on a solid surface and in an area that is visible and easily accessible.

Use control box as a template to mark locations for mounting holes. Drill holes and mount control box.

Route the filter wiring harness to control panel and attach connectors; push firmly until safety lock engages.

Use wire ties to secure wiring.

Connect black wire to ground. Connect red wire through a 7.5 amp in-line fuse to a constant 12 volt dc power source. Connect green wire to an optional remote warning light, if equipped, or cap off.

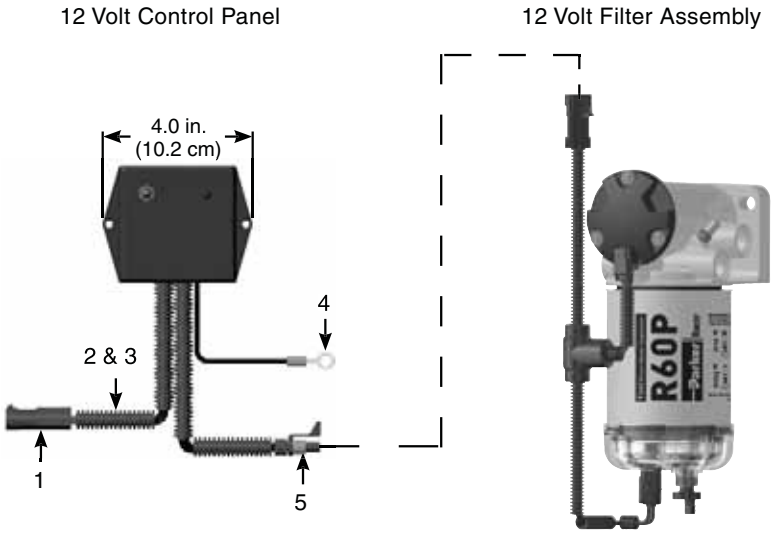

24 Volt

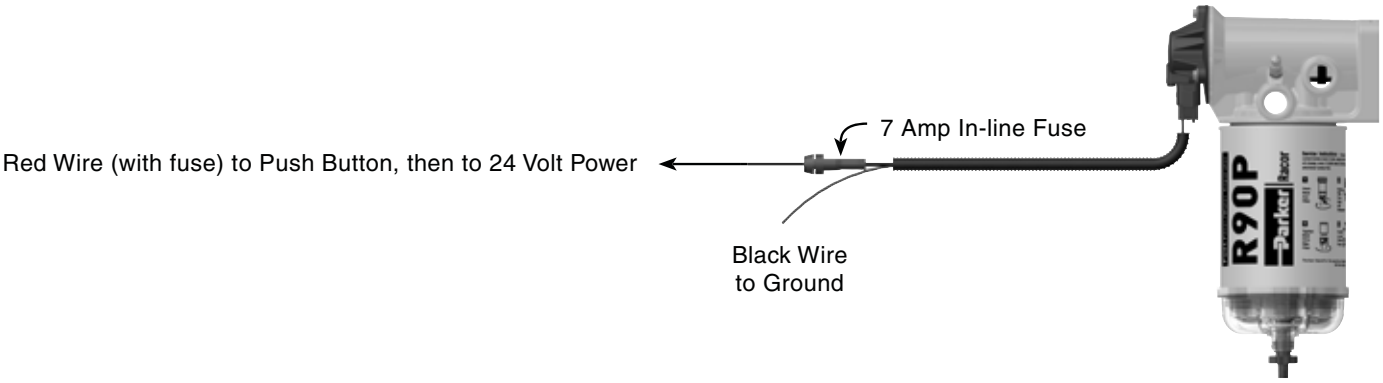

Questions? Contact Technical Support:
800 344 3286 or 209 521 7860 ext. 7555
e-mail: racortech@parker.com

Filterpumps

Lift Pump Filters

The Lift Pump Filter (LPF) has been proven on many original equipment applications. No electrical contacts. No bearings or diaphragms to wear out or fatigue. Endurance life almost doubles nearest competitor.

Two bolt mounting makes installations easy. Nothing to adjust. The pump is self priming to 10 ft.

Stainless steel design allows for no opportunity for corrosion.

The LPF is specifically designed to provide a constant, smooth, dependable supply of fuel to the engine. Priming the fuel system with the LPF removes the air allowing for normal operating conditions. Its small compact design allows for installation in numerous applications where space is an issue.

Product Features:

- **12 or 24 volt Priming Pump**
- **100 micron prefilter screen**
- **Aquabloc®II Filter Technology**

Specifications	23084	23082
Power (Voltage)	12 volt	24 volt
Max. Flow Rate	30 GPH (114 LPH)	30 GPH (114 LPH)
Filter Micron Rating	80 micron	80 micron
Port Size (SAE J1926)	1/8”-27 NPTF	1/8”-27 NPTF
Height	7.1 in. (18.0 cm)	7.1 in. (18.0 cm)
Width	3.2 in. (8.1 cm)	3.2 in. (8.1 cm)
Depth	3.5 in. (8.9 cm)	3.5 in. (8.9 cm)
Weight (dry)	2.3 lb (1.0 kg)	2.3 lb (1.0 kg)
Clean Pressure Drop	0.70 PSI (4.8 kPa)	0.70 PSI (4.8 kPa)
Shut-off Pressure (Min. - Max.)	9 - 11.5	9 - 11.5
Ambient Temp. Range	-40° to +250°F (-40° to +121°C)	
Max. Fuel Temp.	190°F (88°C)	

Questions? Contact Technical Support:
800 344 3286 or 209 521 7860 ext. 7555
e-mail: racortech@parker.com

Parker Racor

Filterpumps

Mounting & Port Information

Keep all fuel lines and flow restrictions to a minimum.

Use maximum size fuel hose possible.

Do not use two 45° fittings where one 90° elbow will work.

Avoid sharp bends, surfaces that move, sharp edges, or hot areas such as exhaust piping.

Use 1/4″ mounting hardware.

Mount filter vertically on suction (vacuum) side of fuel transfer pump (or injection pump).

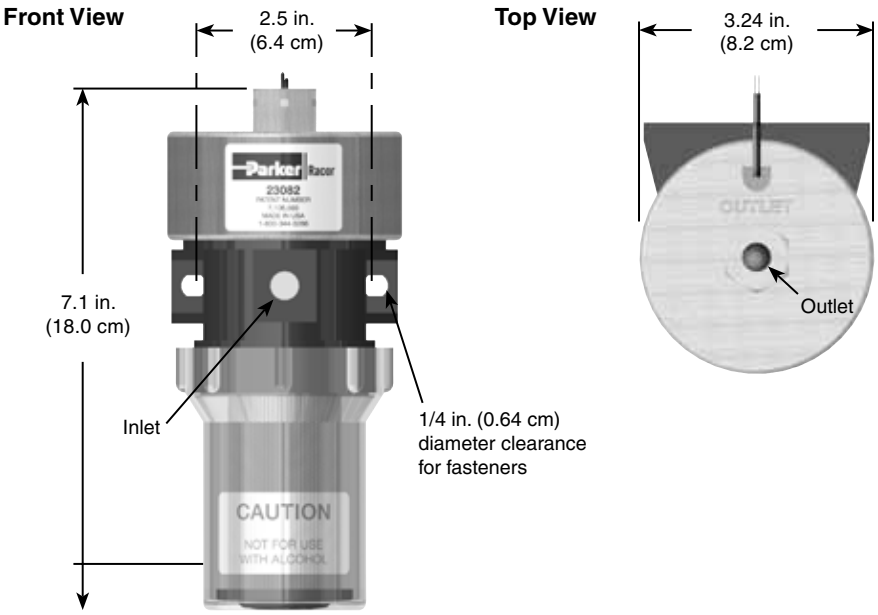

Installation Diagram

Optional Bypass Installation and Operation (Allows user to service filter without shutting down engine.)			
Valves	1	2	3
Unit On-line	Open	Open	Closed
Unit Off-line	Closed	Closed	Open

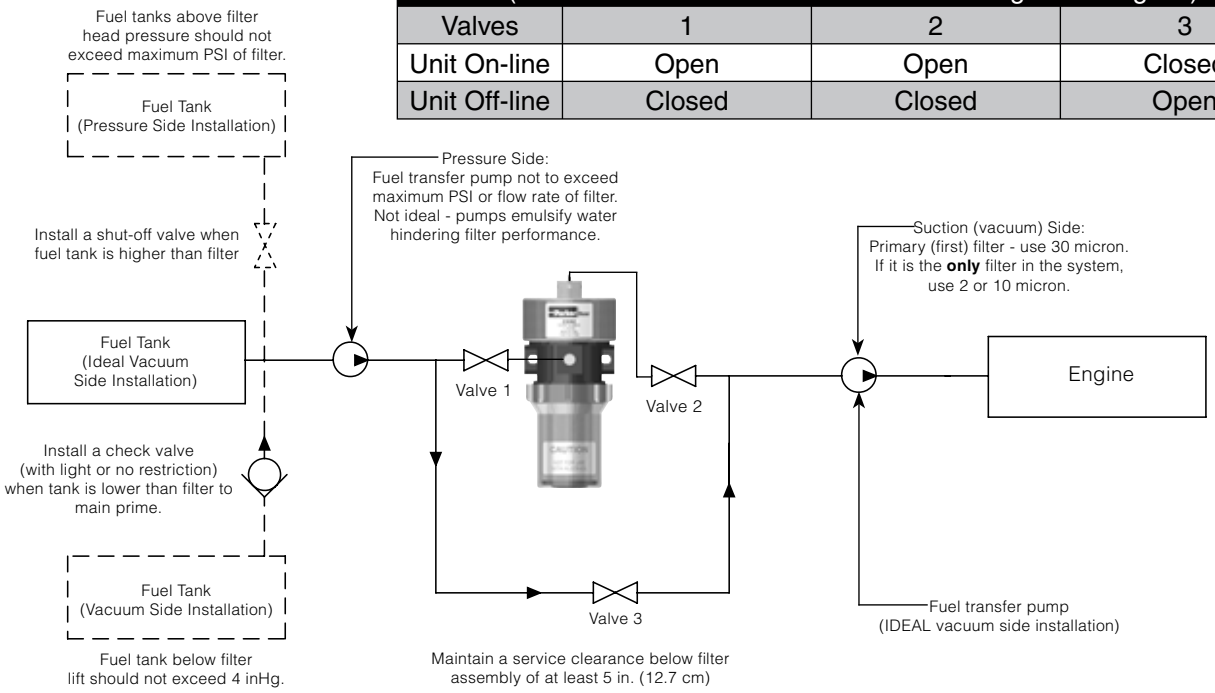

Questions? Contact Technical Support:
800 344 3286 or 209 521 7860 ext. 7555
e-mail: racortech@parker.com

Filterpumps

Turbine Series Electric Primer Pump Kit

Product Features:

- Easy installation.
- Pump adds only 3.3" to the over all assembly.
- 60 gallons per hour flow rate while in priming mode.
- 12 VDC brushed electric motor.
- 24 VDC brushless electric motor.
- 100 micron pre-screen.
- One size fits several models.
- Kit includes wiring harness and controller switch.
- Allows for electric re-priming of filter and fuel system.
- Not for use as continuous duty.

The Fuel Primer Pump Kit is an innovative and proprietary system consisting of a pre-screen filter, a flow bypass circuit and a roller cell pump powered by a 12VDC brushed motor or a 24VDC brushless motor.

When the switch is activated the fuel is drawn into the pre-screen and then pumped through the housing refilling the unit with fuel. When not in use the primer pump system is bypassed and the Racor fuel filter/water separator functions normally.

The Primer Pump Kit works on Racor duplex and triplex systems also. This will allow one Racor primer pump to prime the other filter or filters in a manifold system such as a 751000MAX for example.

1000MA with Electric Priming Pump (RKP1912) installed on a sport fishing yacht.

Questions? Contact Technical Support:
800 344 3286 or 209 521 7860 ext. 7555
e-mail: racortech@parker.com

Parker Racor

Filterpumps

Filterpumps Overview

	RKP1912	RKP1924
Power (Voltage)	12 volt (Brushed)	24 volt (Brushless)
Max. Flow Rate	60 GPH (227 LPH)	60 GPH (227 LPH)
Filter Micron Rating	100 micron	100 micron
Height	3.3 in. (8.4 cm)	3.3 in. (8.4 cm)
Width	7.3 in. (18.8 cm)	8.2 in. (20.8 cm)
Depth	6.3 in. (16.0 cm)	6.3 in. (16.0 cm)
Weight (dry)	2.3 lb (1.0 kg)	2.3 lb (1.0 kg)
Ambient Temp. Range	-40° to +250°F (-40° to +121°C)	
Max. Fuel Temp.	190°F (88°C)	

Mounting & Dimensions

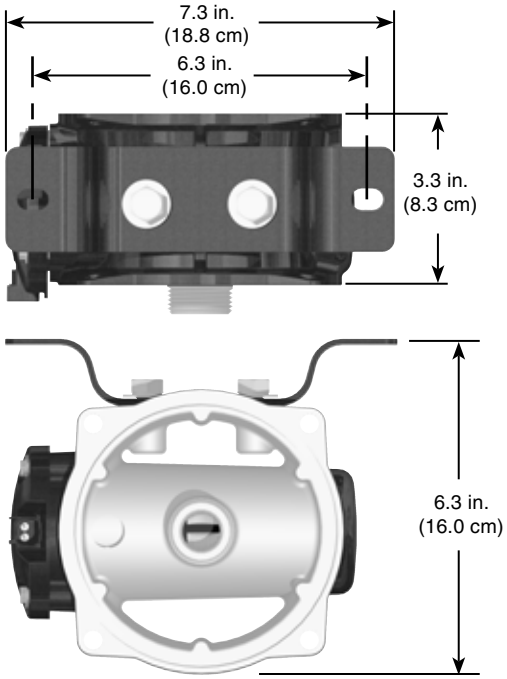

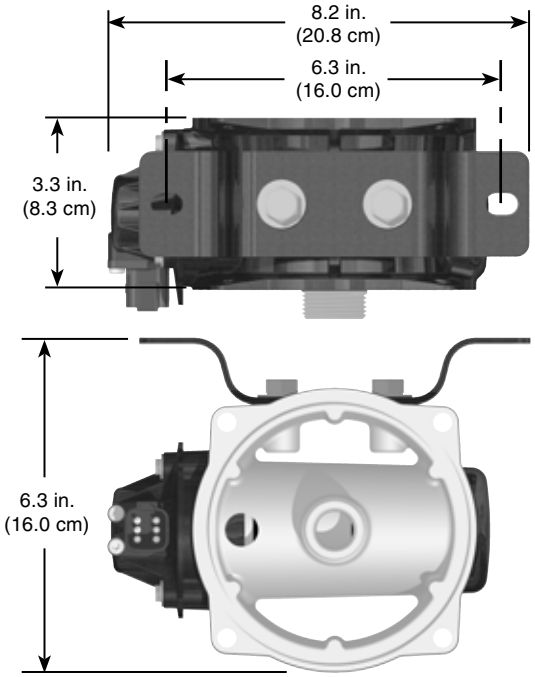

Questions? Contact Technical Support:
800 344 3286 or 209 521 7860 ext. 7555
e-mail: racortech@parker.com

Filterpumps

RKP1912 Part Breakdown

	Description
A	Rubber Gasket
B	Housing O-ring (x2)
C	Check Valve - Primer Pump
D	Primer Pump Housing
E	Checkball - Gasket
F	Checkball
G	Mounting Screws (x4)
H	Prescreen Element

	Description
I	Adapter O-ring
J	Adapter
K	Pump O-ring
L	Body O-ring
M	12V Primer Pump
N	Pump/Head Screws (x3)
O	12V Connector Harness
P	Push Button Switch

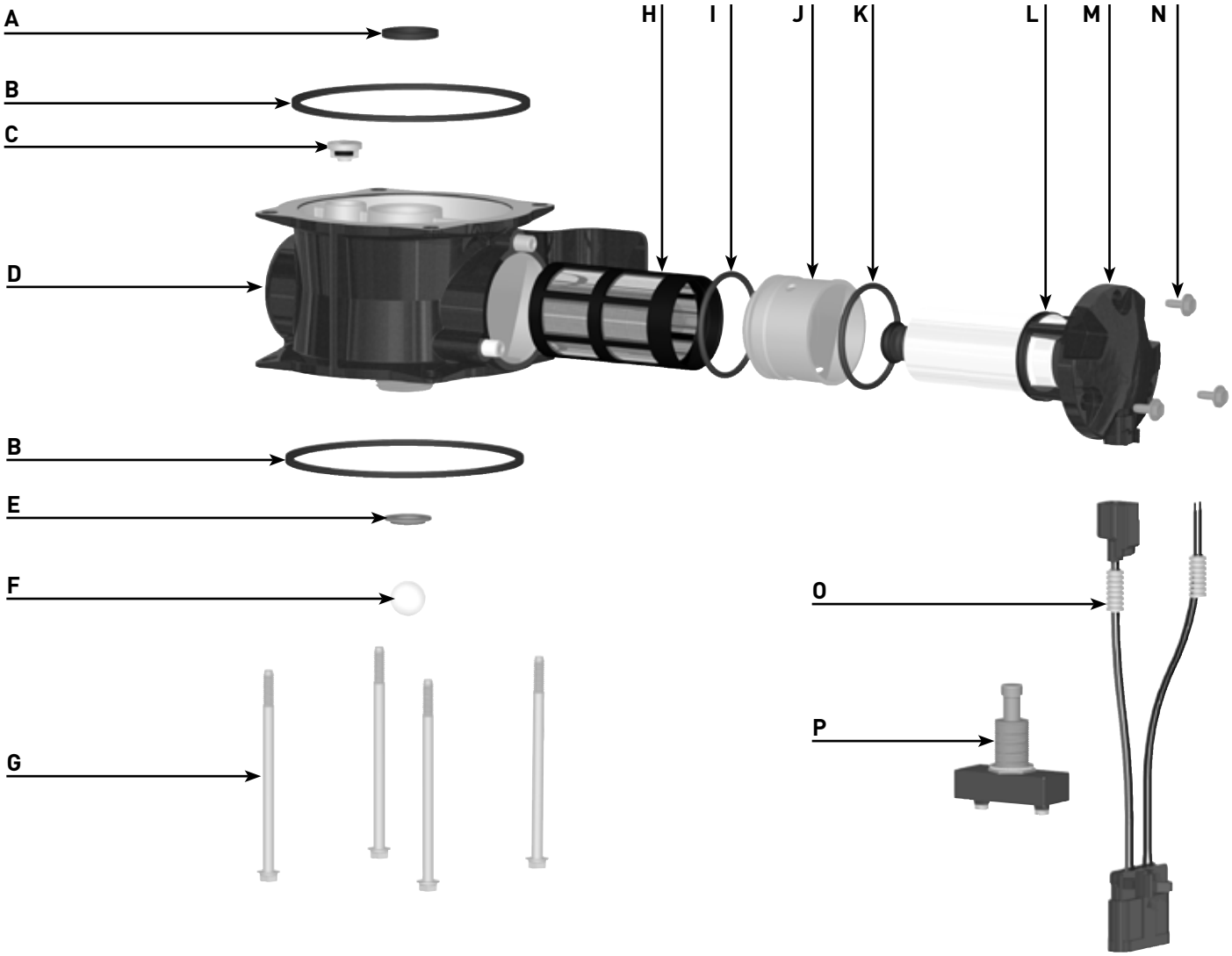

Filterpumps

RKP1924 Part Breakdown

	Description
A	Rubber Gasket
B	Housing O-ring (x2)
C	Check Valve - Primer Pump
D	Primer Pump Housing
E	Checkball - Gasket
F	Checkball
G	Mounting Screws (x4)
H	Prescreen Element

	Description
I	Adapter O-ring
J	Adapter
K	Pump O-ring
L	Body O-ring
M	24V Primer Pump
N	Pump/Head Screws (x3)
O	24V Connector Harness
P	Push Button Switch

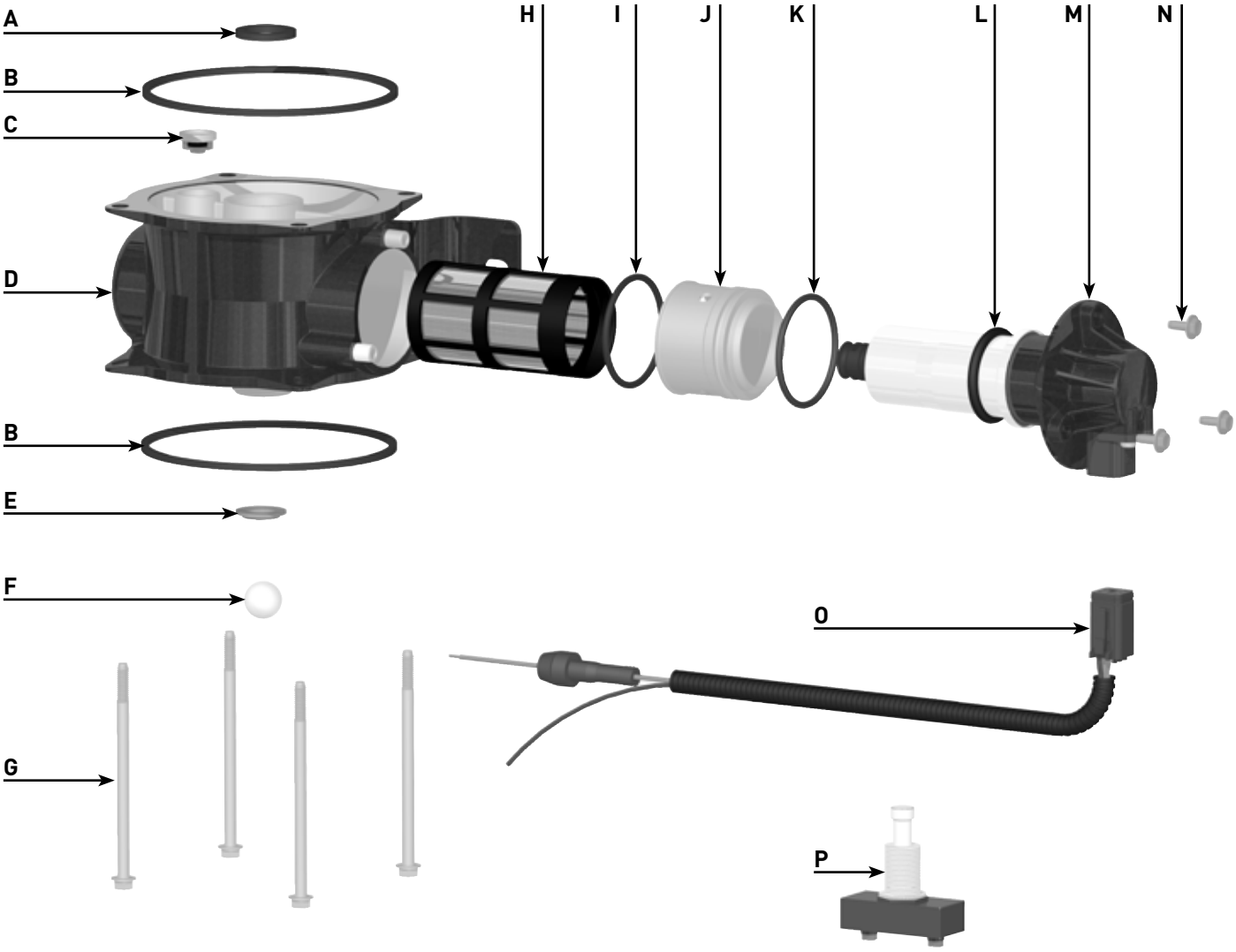

Questions? Contact Technical Support:
800 344 3286 or 209 521 7860 ext. 7555
e-mail: racortech@parker.com

Accessories

REF600LE

Solid State Electronic Flasher

Overview:

The REF600LE is suitable for today's longer rigs requiring more lamps, as well as many special need vehicles. These 12 volt power houses generate over 100 million flashes per flasher for optimum value. Proven reliable in years of field testing, each flasher features overload and short protection, 14-bulb capacity, no ground wire, and can be reset.

Product Features:

- **Overload and Short Protection**
- **Fallout History of Less Than One Tenth of One Percent**
- **14-Bulb Capacity**
- **Handles 30 Amps**
- **No Ground Wire**
- **Resettable**

Questions? Contact Technical Support:
800 344 3286 or 209 521 7860 ext. 7555
e-mail: racortech@parker.com

Parker Racor

Accessories

Specifications

	REF600LE
Power Supply	12 Volt
Power Handling	30 Amps
Maximum Bulb Capacity	14
Flash Count	>100,000,000
Depth (A)	1.5 in. (3.8 cm)
Diameter (B)	1.7 in. (4.3 cm)
Weight	0.3 lb (0.14 kg)

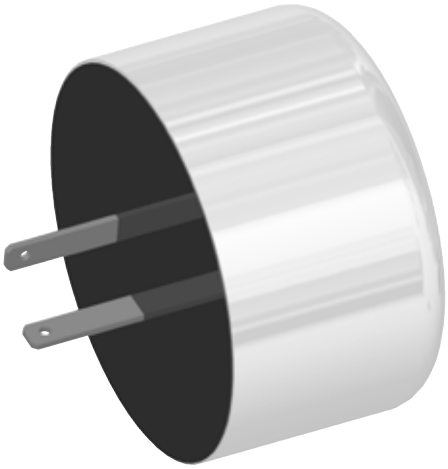

Dimensions

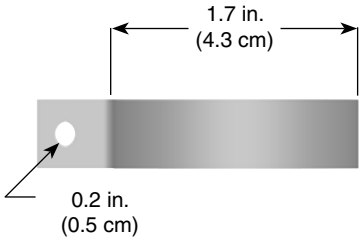

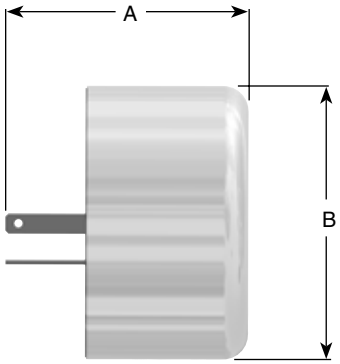

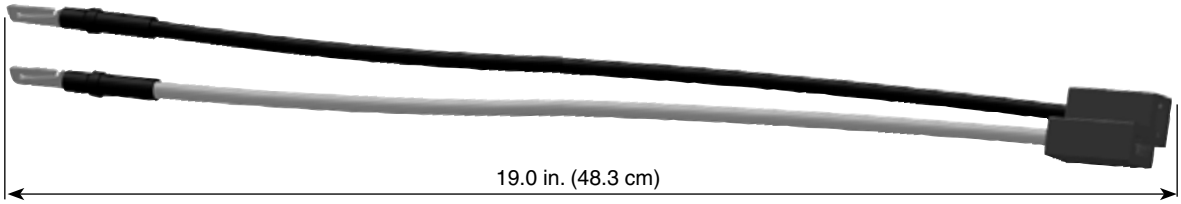

Questions? Contact Technical Support:
800 344 3286 or 209 521 7860 ext. 7555
e-mail: racortech@parker.com

Replacement Parts

	Part Number	Description
1.	REF600LE	Solid State Electronic Flasher (includes #'s 2 and 3)
2.	N/A	Mounting Clamp
3.	N/A	Wire Harness

Additional Parts (not shown)

14391	Installation Instructions

Accessories

RK22936 No Spill Filler Spout

These versatile filler spouts have unlimited uses. They fit many Racor products including additives bottles and the flexible design allows users to bend the spout for flow control. This kit includes 4 hanging strips with 12 pieces on each strip; that's a total of 48 pieces per kit.

RK 31605 Parker Super O-lube

Another great product that helps with the installation of our filter assemblies and ensures a correct seal. Parker Super O-lube has a silicone base and will not harm O-rings, seals and other gaskets. Available in a 2 oz. tube which gives you plenty to go around. One 2 oz. tube per kit.

RK 22628 Bowl Wrench

Racor offers a hand wrench to remove all metal and see-thru Spin-On bowls that feature external ribs. By simply fitting the wrench over the bowl ribs, the bowl can be removed from the replaceable Spin-On element, or filter housing with little effort. The wrench is made of a corrosion proof, high-impact, high-strength engineered polymer. One bowl wrench per kit.

Questions? Contact Technical Support:
800 344 3286 or 209 521 7860 ext. 7555
e-mail: racortech@parker.com

Accessories

Water Probe Kits

Racor offers a wide selection of water probes, each designed for use with particular models and installation requirements. These probes are available in various configurations to fit every Racor filter/separator. The water probe is only a component in the water detection system and will not work without a Racor electronic detection module (see next two pages).

The **RK30880** has the electronic detection module built-in to its design and has the simplest installation procedure. Multiplex units must use one probe for each collection bowl but only one water detection module is needed. Wiring instructions are supplied with each water detection module sold Use the guide below to find the correct probe for your application.

Specifications	RK 21069	RK 30964	RK 22371	RK 30880
Threads	½”-20 Threads	½”-20 Threads	9/16”-18 Threads	½”-20 Threads
Description	One piece design with two wires. Requires a detection module.	Includes detachable 2-wire connector. Requires a detection module.	Includes detachable 2-wire connector. Requires a detection module.	Includes detachable 3-wire connector, built-in detection electronics and under-dash warning light. Probe sends ground signal to light.
Voltage	12 or 24 vdc	12 or 24 vdc	12 or 24 vdc	12 or 24 vdc
Power Draw: **(12 volt)** **(24 volt)**	N/A	N/A	N/A	5 Milliamps 10 Milliamps
Maximum Load	N/A	N/A	N/A	1 Amp
Weight	0.03 lb (0.01 kg)	0.02 lb (0.01 kg)	0.1 lb (0.05 kg)	0.4 lb (0.2 kg)

Caution: Never wire a water probe directly to voltage or another brand of detection module.

Accessories

RK 21069 Replacement Part List

RK 21069 Water Probe
(one piece design)

RK 30964 Replacement Part List

1. **RK 30902** Water Probe
2. **30904** Connector

RK 22371 Replacement Part List

1. **RK 21145** Water Probe
2. **RK 21199** Connector

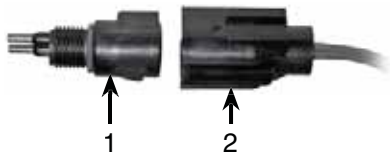

RK 30880 Replacement Part List

(individual components NOT sold separately)

1. Light Panel
2. 14GA Black Wire
3. Water Probe with Male Connector
4. Three Wire Female Connector

Questions? Contact Technical Support:
800 344 3286 or 209 521 7860 ext. 7555
e-mail: racortech@parker.com

Accessories

Water Detection Modules

Racor Water Detection Kits are available in a wide selection for various installation requirements. Under dash, in-dash and remote mount, these solid-state units may be used with any Racor fuel filter/water separator and water probe. They are manufactured using the highest quality materials and are all 100% electrically tested.

An electric detection module analyzes electrical resistance at the water probe and determines if water is present. If so, the detection module operates to indicate water, based on its features listed below. All units reset automatically after water is removed (unless specified). All water detection module kits include an RK21069 water probe.

Under Dash

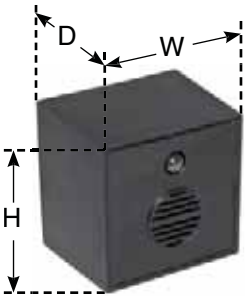

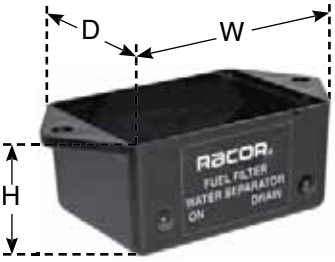

Specifications	RK 12870	RK 12871	RK 20725	RK 20725-24
Voltage	12 vdc	24 vdc	12 vdc	24 vdc
Features	Light and Buzzer	Light and Buzzer	Light Only	Light Only
Description	Lamp illuminates and buzzer sounds when water is detected. Water must be drained to reset light and stop buzzer.	Same as RK12870	Green ON lamp illuminates with power and red DRAIN lamp illuminates when water is detected. Includes initial power-up self diagnosis feature & circuit protection.	Same as RK20725
Dimensions	1.4” H x 1.25” D x 1.4” W	1.4” H x 1.25” D x 1.4” W	1.0” H x 1.5” D x 2.0 W	1.0” H x 1.5” D x 2.0 W
Power Draw	1 Milliamp	1 Milliamp	10 Milliamps	10 Milliamps
Max. Internal Load	30 Milliamps	30 Milliamps	30 Milliamps	30 Milliamps
Weight	0.2 lb (0.1 kg)	0.2 lb (0.1 kg)	0.4 lb (0.2 kg)	0.4 lb (0.2 kg)

Accessories

11-1048 Conversion Kit

Introduction

The 11-1048 conversion kit converts a RK12870 or RK12871 electronic water detection module from under-dash mounting to in-dash
see image below.

Description

1. **Mounting Bracket**
2. **Face Plate**
3. **(2) #6 x 3/8" Screws**

Installation

Slide metal bracket onto back of a electronic detection module. Verify bracket fits snugly between raised bracket guides on alarm's back cover.

Insert face plate onto 2 1/16" diameter hole. Align holes in face plate at top half of opening. Insert screws into face plate holes.

While holding face plate and screws in place, bring electronic detection module with attached metal bracket up behind opening. Align holes in metal bracket with screws.

Tighten screws with Phillips screw driver until assembly is snug—do not overtighten. (see 11-1049 Installation Instructions for more information).

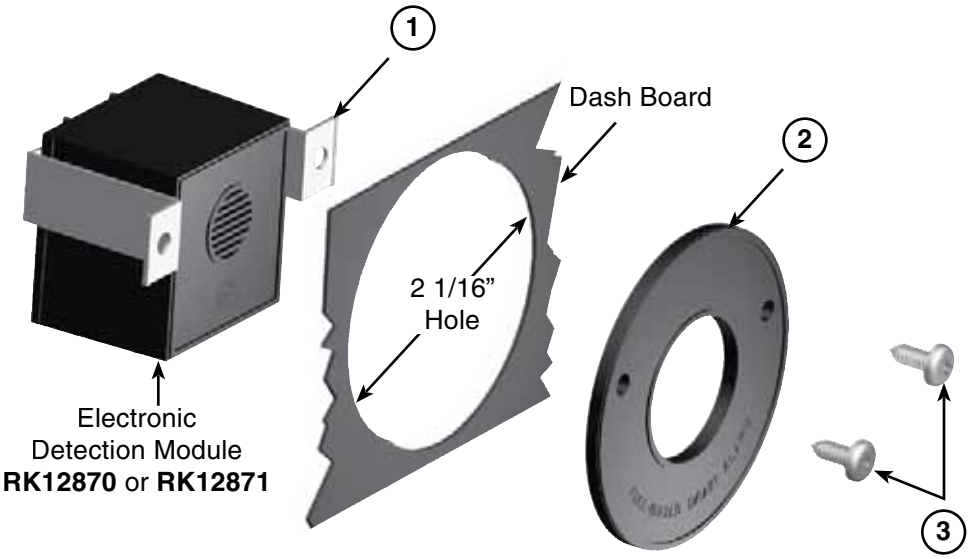

Questions? Contact Technical Support:
800 344 3286 or 209 521 7860 ext. 7555
e-mail: racortech@parker.com

Accessories

Water Detection Modules In Dash

Specifications	RK 20726	RK 11-1570
Voltage	12 or 24 vdc	12 or 24 vdc
Features	Light & Buzzer	Light & Buzzer
Description	Red DRAIN lamp illuminates continuously and buzzer sounds momentarily when water is detected. Power-up self diagnosis feature and circuit protection included.	Includes pre-set vacuum switch (12in.Hg.), connector and outlet adapter fitting. The red DRAIN or CHANGE FILTER lamps illuminate continuously and buzzer sounds momentarily when water is detected.
Dimensions[1]	2.2” Diameter x 3.2” Depth	2.2” Diameter x 2.0” Depth
Power Draw: **(12 volt)** **(24 volt)**	 3 Milliamps 13 Milliamps	 3 Milliamps 14 Milliamps
Max. Internal Load	30 Milliamps	30 Milliamps
Weight	0.4 lb (0.2 kg)	0.9 lb (0.4 kg)

[1] Cut 2.0” diameter hole to mount gauges in instrument panel.

Accessories

Remote-Mount Water Detection Modules

Specifications	RK14329	RK14321	14332
Voltage	12 vdc	24 vdc	12 vdc
Features	Sends Hot (+) Signal	Sends Hot (+) Signal	Sends Ground (-) Signal
Description	Receives a signal from a water probe or vacuum switch (not included) and then sends a signal to a horn or lamp. Must be used with a relay if power draw is over 1 amp.	Same as RK14329 but sends 24 vdc hot (+) signal.	Same as RK14329 but sends 12 vdc ground (-) signal
Dimensions	0.7” H x 2.5” D x 2.8” W	1.0” H x 1.5” D x 2.0 W	1.0” H x 1.5” D x 2.0 W
Power Draw	14 Milliamps	10 Milliamps	10 Milliamps
Max. Internal Load	30 Milliamps	30 Milliamps	30 Milliamps
Weight	0.3 lb (0.1 kg)	0.4 lb (0.2 kg)	0.4 lb (0.2 kg)

1606B Part List

1. **RK11233** Vacuum Gauge
2. **7232-4** Adapter Fitting (1/8” NPTM x #4 (1/4”) hose)
3. **7234-4** Adapter Fitting (1/4” swivel x #4 (1/4”) hose)

11-1115 Installation Instructions

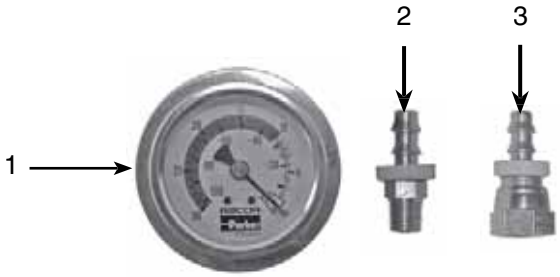

Questions? Contact Technical Support:
800 344 3286 or 209 521 7860 ext. 7555
e-mail: racortech@parker.com

Accessories

Vacuum Gauges

Vacuum gauges are available to monitor element condition and as the filter element slowly becomes clogged with contaminates the restriction (resistance to flow) increases. The fuel pump still tries to draw fuel (suction) but because of this restriction less fuel is delivered to the engine and instead more air is pulled from it (fuel de-gassing). These results can cause the engine to lose power and eventually stall.

By installing a vacuum gauge in your fuel system (at the outlet side of the Racor filter) visual monitoring of element condition is possible at a glance. At the first indication of decreased performance, note the dial reading or apply the 'red line' decal provided with most kits. This will assist in knowing when to change the filter at the next interval.

Specifications	RK 11233	1606B
Description	Silicone dampened, 0-30 inHg. Instrument panel installation.	Includes gauge and two fittings (see below). Instrument panel installation.
Threads	¼" NPT back bracket mount.	¼" NPT back bracket mount.
Dimensions	2.0" W x 1.9" D	2.0" W x 1.9" D
Dial	2 in.	2 in.
Weight	0.4 lb (0.2 kg)	0.4 lb (0.2 kg)

Special Notes: For severe vibration applications, mount the gauge on a stable, remote location and connect to the source using flexible tubing. After September 1999, Racor converted many liquid-filled gauges to new silicone dampened movement. This new (dry) technology provides a vibration resistant design that never leaks fluid or requires adjustments due to temperature or altitude variations.

Accessories

T-handle Vacuum Gauge

T-handle vacuum gauges are available to monitor element condition and as the filter element slowly becomes clogged with contaminates the restriction (resistance to flow) increases. The fuel pump still tries to draw fuel (suction) but because of this restriction less fuel is delivered to the engine and instead more air is pulled from it (fuel de-gassing). These results can cause the engine to lose power and eventually stall.

By installing a vacuum gauge in your fuel system (at the outlet side of the Racor filter) visual monitoring of element condition is possible at a glance. At the first indication of decreased performance, note the dial reading or apply the 'red line' decal provided with most kits. This will assist in knowing when to change the filter at the next interval.

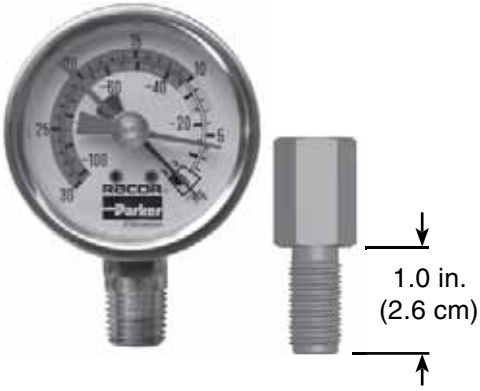

Specifications	RK11-1969	RK 11-1669
Description	**500FG units only.** T-handle vacuum gauge kit includes gauge & **11-1969** Fitting 9/16"-18 UNF	**For 900FH & 1000FH units only.** T-handle vacuum gauge kit includes gauge & **11-1668** Fitting, 9/16"-18 UNF
Threads	¼" NPT bottom boss mount.	¼" NPT bottom boss mount.
Dimensions	2.0" W x 1.1" D	2.0" W x 1.1" D
Dial	2 in.	2 in.
Weight	0.3 lb (0.1 kg)	0.3 lb (0.1 kg)

Special Notes: For severe vibration applications, mount the gauge on a stable, remote location and connect to the source using flexible tubing. After September 1999, Racor converted many liquid-filled gauges to new silicone dampened movement. This new (dry) technology provides a vibration resistant design that never leaks fluid or requires adjustments due to temperature or altitude variations.

Questions? Contact Technical Support:
800 344 3286 or 209 521 7860 ext. 7555
e-mail: racortech@parker.com

Accessories

Compound Gauge Kits

Compound gauges are recommended for applications where pressure is occasionally present. These conditions are typically a result of 'head' pressure which is present in overhead fuel tank installations. Whatever the reason, compound gauges should be used because damage may result if a straight vacuum only gauge is used. Liquid filled (glycerin) gauges are recommended for high-vibration and pulsation applications (not engine mounted).

Specifications	RK 19476
Description	0-25 inHg / 0-15 PSI.
Threads	¼"NPT bottom mount.
Dimensions	2.0" W x 1.1" D
Dial	2 in.
Weight	0.2 lb (0.1 kg)

Special Notes: For severe vibration applications, mount the gauge on a stable, remote location and connect to the source using flexible tubing.

Accessories

Vacuum Restriction Indicators

RK 32036 and RK32037

Vacuum restriction indicators monitor element condition as the filter slowly becomes clogged with contaminants. As the element gets dirty, restriction increases and less fuel is delivered to your engine causing the engine to lose power and eventually stall.

By installing a vacuum indicator in your fuel system, visual monitoring of element condition is possible at a glance, increasing fuel system troubleshooting efficiency, eliminating guess work, and lengthening element change intervals.

RK 32036
(3/8" SAE Threads)

RK32037
(1/8" NPT Threads)

CAUTION: Do not use with gasoline applications!

Questions? Contact Technical Support:
800 344 3286 or 209 521 7860 ext. 7555
e-mail: racortech@parker.com

Accessories

Filter "Block-Off" Caps

Specifications	22021	11548
Description	Ford Spin-On Cap Assembly (not a filter)	Cummins Spin-On Cap Assembly (not a filter)
Threads	1"-14	1"-14
Gasket Outside Diameter	3.60" x 0.25" thick	2.83" x 0.22" thick
Dimension	3.63" diameter, 3.5" long	3.63" diameter, 3.5" long
Weight	0.3 lb (0.1 kg)	0.3 lb (0.1 kg)

Mounting Bracket Kit

Specifications	RK 11-1518
Description	Frame Rail Mounting Bracket Kit. Features an adjustable powder coated 10 gauge steel design to fit frame rails up to 10" X 3 ¾ and $^{13}/_{16}$" thick. Includes mounting hardware.
Weight	6.0 lb (2.7 kg)

Accessories

OEM Kits

RK 31923

F540/550 Bracket, Hose and Fittings Kit: This kit is designed for use with 1999 and newer 2 wheel drive (2WD) and 4 wheel drive (4WD) vehicles. For this application the 645R30 model fuel filter/water separator (30 micron primary filter element) is suggested - order separately. For colder climate applications, the heated version is recommended: 645R1230 (this model includes a 12 vdc, 200 watt in-bowl heater - order relay kit number RK 11861 unless your vehicle can accommodate a 17 amp draw at startup).

RK32313

DMAX Primary Fuel Filter Kit: This primary fuel filter kit was designed specifically for General Motors pickups (extended cab and crew cab only) with 6.6L Duramax Diesel engines.

Kit Includes:

Qty	Part No.	Description
1	**11-1962**	Primary Filter Label
1	**RK 11861**	12v Heater Relay Kit
4	**11801**	3/8”-16 X 1.5 Capscrews
8	**11080**	3/8” SAE Flat Washers
4	**11901**	3/8”-16 Self-locking Hexnuts
12	**11114**	6 3/4” Plastic Wire Ties
2	**11-1220**	3/8” Ring Terminals
2	**12252**	Wire Splice Connectors
2	**911-N6-H8**	3/8” NPT X 1/2” Hose Fittings
2	**32280**	1/2” Hose X 1/2” Tube Fittings
4	**50016**	#10 Hose Clamps
1	**660R1210**	Fuel Filter/Water Separator
1	**32312**	#8 X 36” Rubber Hose
1	**32311**	Filter Bracket
1	**32314**	Water Sensor/Harness Kit

Illustration does not show all components.

Accessories

Electrical Heater relay Kits

The following relay kits may be necessary when installing Racor Heater Kits due to the power demand. Standard OE fuses, wiring and alternators may be unable to carry the load without overheating or potential shorting, creating a serious condition.

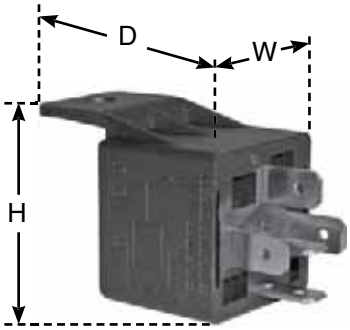

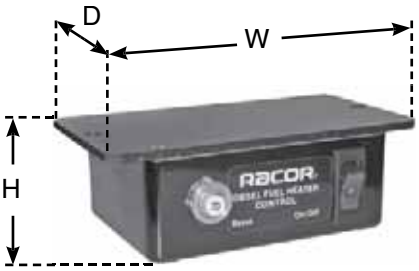

Specifications	RK 11861	RK 11862	RK 19490-12	RK 19490-24
Description	Heater Relay Kit, Includes fuse and holder.	Heater Relay Kit, Includes fuse and holder.	Heavy-Duty Relay Kit	Heavy-Duty Relay Kit
Voltage	12 vdc	24 vdc	12 vdc	24 vdc
Detection Module	Remote Mount	Remote Mount	Under Dash	Under Dash
Maximum Watts	300	360	600	900
Maximum Amps	25	15	50	37
Dimensions	1.3" H x 1.6" D x 1.1" W	1.3" H x 1.6" D x 1.1" W	1.7" H x 2.9" D x 5.1" W	1.7" H x 2.9" D x 5.1" W
Weight	0.3 lb (0.1 kg)	0.3 lb (0.1 kg)	1.6 lb (0.7 kg)	1.6 lb (0.7 kg)

Caution: If you are uncertain if your electrical system can provide the additional power draw, consult your equipment dealer or qualified electrician.

Accessories

12879

Aquabloc®II Demonstration Unit

The Racor Attache Aquabloc®II Demonstration Unit is a unique way of showing the exceptional water separation capabilities of our Aquabloc®II paper media. This demonstration will show that our Aquabloc®II paper media will easily separate a fuel/water mixture and allow fuel to pass through the element while water is blocked and held back.

This demonstration can be repeated many times with the same element and will prove that Racor Aquabloc®II elements are far superior than other elements on the market.

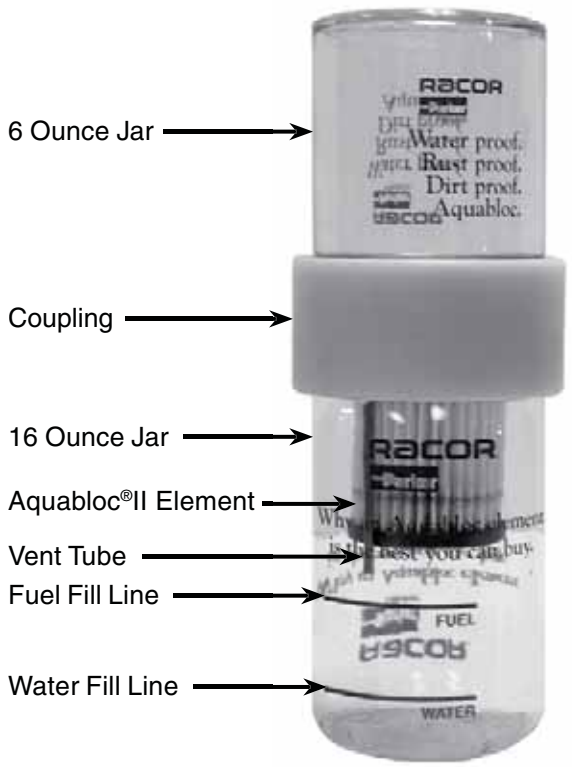

Before Demonstration

Completed Demonstration

Questions? Contact Technical Support:
800 344 3286 or 209 521 7860 ext. 7555
e-mail: racortech@parker.com

Accessories

FPM-050

Fuel Polishing Module

How it works, the advantages of daily fuel polishing

As diesel fuel warms through engine use or the daily heat of the sun, its natural capacity to absorb water increases, dissolving and dispersing a percentage of any water in the tank. When the fuel cools, this dissolved water desorbs into a bacteria harboring emulsified suspension. By flowing the fuel gently over many hours, the FPM maximizes your filter's ability to separate this difficult to remove emulsion and filter out particles.

Benefits:

- **Daily fule maintenance keeps fuel dry, promoting a bacteria-free environment & preventing contaminant build-up**
- **Reduces the need to use expensive fuel treatments and additives**
- **Patented solid state technology consumes only 150 mA, minimizing battery drain and enabling continuous fuel maintenance. Unit can be run off a small solar panel**
- **Breakthrough technology allows for fuel maintenance during engine down time and off-season storage**

Specifications	FPM-050
Filtration Rate	50 gallons per day (up to 350 gallons per week)
Power Requirements	less than 2 watt (less than 3A-hrs per day)
Internal Pressure Drop	less than 0.5 PSI
Voltage Requirements	10-16 VDC, 12 VDC nominal
Approximate Dimensions (Body) **Approximate Dimensions (with Bracket)**	3.8" L x 2.47" H x 2.14" D 3.87" L x 4.48" H x 2.14" D
Ports (Inlet & Outlet)	3/8" NPTF, Recirculation - 1/4" NPTF
Weight	less than 2 lbs.
Acceptable Fuels	diesel, biodiesel, kersone
Connections	includes 18 AWG leads

Note: Actual flow rate is system dependent
Note: Not compatible with gasoline or other flammable liquids

Questions? Contact Technical Support:
800 344 3286 or 209 521 7860 ext. 7555
e-mail: racortech@parker.com

Parker Racor

Accessories

FPM-PTC-12

Programmable Timer/Controller for FPM

Benefits:

- Easy to install enclosure can be flush - or surface - mounted
- Programmable timer can control common appliances to save energy and increase safety and security
- Customize to any schedule with up to 8 daily switching cycles
- Compatible with 12 VDC systems and appliances
- Enables unattended fuel polishing when used with a Parker Fuel Polishing Module
- Splash proof enclosure protects timer from harsh environments

Specifications	FPM-PTC-12
Switch Type	single pole/single throw
Switch Current Rating	10 A at 25˚C, 16 at 40˚C
Operating Voltage	12 VDC nominal
Connections	includes 18 AWG leads
Operating Range	14˚ **F (-10˚C) to 131˚F (55˚C)**
Overall Size	3.95" diameter x 1.68" deep (including cover)
Approximate Weight	0.75 lbs
Mounting	#4 screws recommended

Questions? Contact Technical Support:
800 344 3286 or 209 521 7860 ext. 7555
e-mail: racortech@parker.com

Accessories

800D-5REC-D

Heavy-Duty Filter/Recycler Buggy

Installation and Service Instructions

Instruction Part Number 14406 Rev -

This mobile unit can serve a variety of applications at various locations using minimal floor space. It is generally used in a truck service shop for filtering/recycling/transferring fuel from tank to tank. Used for this purpose they remove contaminants from fuel using the following legendary three stage process:

Stage 1 - Separation

As fuel enters the assembly, it moves through the centrifuge and spins off large solids and water droplets, which are heavier than fuel, and fall to the bottom of the collection bowl.

Stage 2 - Coalescing

Small water droplets bead-up on the surface of the conical baffle and cartridge filter. When heavy enough, they too fall to the bottom of the collection bowl.

Stage 3 - Filtration

Proprietary Aquabloc®II cartridge filters repel water and remove contaminants from fuel down to 2 micron (nominal).

Product Features:

- **Portable and easy to use**
- **Replacement filters available to 2 micron**
- **Easy to service**
- **Simple installation**
- **Heavy-duty construction**
- **Increased fuel efficiency**
- **Clear collection bowl**
- **Self-venting water drain**

Operating the Recycler

Place Fuel Tank Suction Line (15 ft max. length) so that fuel is drawn from bottom most portion of the tank. The Fuel Tank Return Line (15 ft max. length) is to return filtered fuel to the top of fuel tank (see Operation Diagram below).

Priming/Maintenance Instructions

1. **Switch pump off.**
2. **Open drain valves on bottom of filters. Drain all contaminants. Close drain valves.**
3. **Remove T-handles and lids from top of filter housings.**
4. **Fill filter housings with clean fuel.**
5. **Lubricate lid gaskets and T-handle O-rings with clean fuel or motor oil.**
6. **Replace lids and T-handles, tighten snugly by hand - do not use tools.**

Filter Replacement

1. **Switch pump off.**
2. **Remove T-handles and lids.**
3. **Remove filters by holding bail handles and slowly pulling upward with a twisting motion. Dispose of properly.**
4. **Install new filters.**
5. **Fill filter housings with clean fuel.**
6. **Lubricate lid gaskets and T-handle O-rings with clean fuel or motor oil.**
7. **Replace lids and T-handles, tighten snugly by hand - do not use tools.**

Questions? Contact Technical Support:
800 344 3286 or 209 521 7860 ext. 7555
e-mail: racortech@parker.com

Parker Racor

Accessories

Operation Diagram

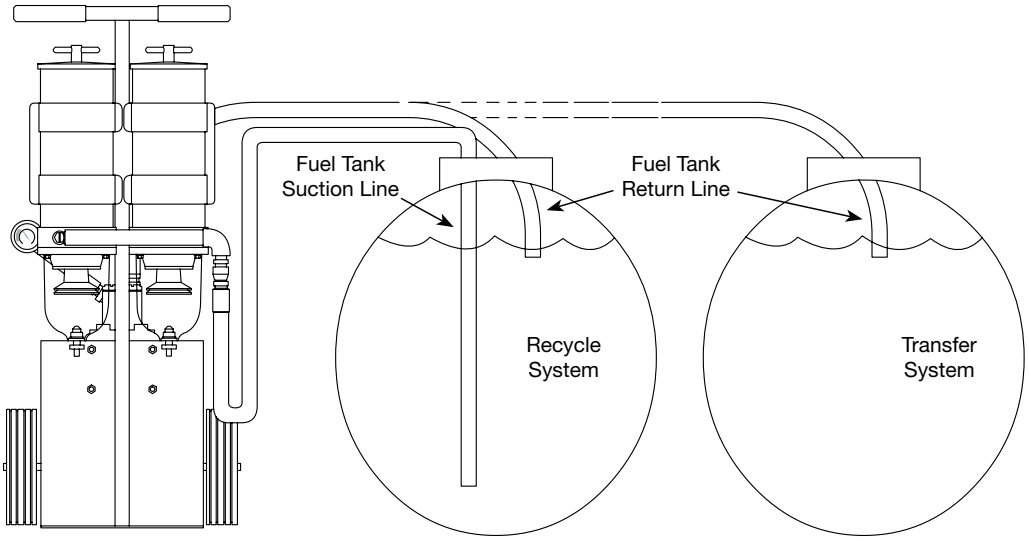

Troubleshooting

Mechanical Symptom	Solution
Unit will not prime.	Unit not filled with fuel. (see priming instructions)
	T-handle not tight. (tighten)
	Hose fittings are loose. (tighten)
	Drain valve open. (close valve)
No fuel flow or low flow, high vacuum restriction, or poor filter life.	Filters clogged. (replace filters)
	Hose restricted. (check hose length, may be a pinched or plugged hose.)
	Viscosity of fuel too high. (fuel must be heated.)

Electrical Symptom	Solution
Unit will not turn on.	Motor impellar is bound. (carefully turn motor fan in rear with a screwdriver.)
	Loose wiring. (tighten)
	Motor overheated and turned off. (turn power off allowing motor to cool.)
Caution: Turn off power when performing check list on motor.	

Questions? Contact Technical Support:
800 344 3286 or 209 521 7860 ext. 7555
e-mail: racortech@parker.com

Accessories

Replacement Parts

1000FH10

	Part No.	Description
1.	RK 11-1945	T-handle and O-ring Kit (includes A)
2.	RK 11-1927-01	Lid Kit (includes B)
3.	2020TM-OR	Replacement Filter (10 Micron) (includes A & B) Other filter options: 2020SM-OR (2 micron) 2020PM-OR (30 micron)
4.	RK 11815-103	Mounting Bracket Kit
5.	RK 11-1939	Conical Baffle and Turbine Centrifuge Kit (includes B, C, D, & E)
6.	RK 11-1938	See-thru Bowl with Drain and Plug Kit (includes B, F, & 10)
7.	RK 20126	Bowl Plug Kit
8.	RK 11037A	Bowl Ring (includes B & G)
G.	RK 11542	Cap Screw Kit

800D-5REC-D

	Part No.	Description
9.	**1000FH10**	Fuel Filter/Water Separator (X2)
10.	**RK 11815-103**	Mounting Bracket Kit
11.	**Contact Factory**	Compound Gauge Kit
12.	**Contact Factory**	STK Hose
13.	Contact Factory	Hose Assembly Pipe Inlet
14.	Contact Factory	Pump Motor 3GPM 110/220 Kit

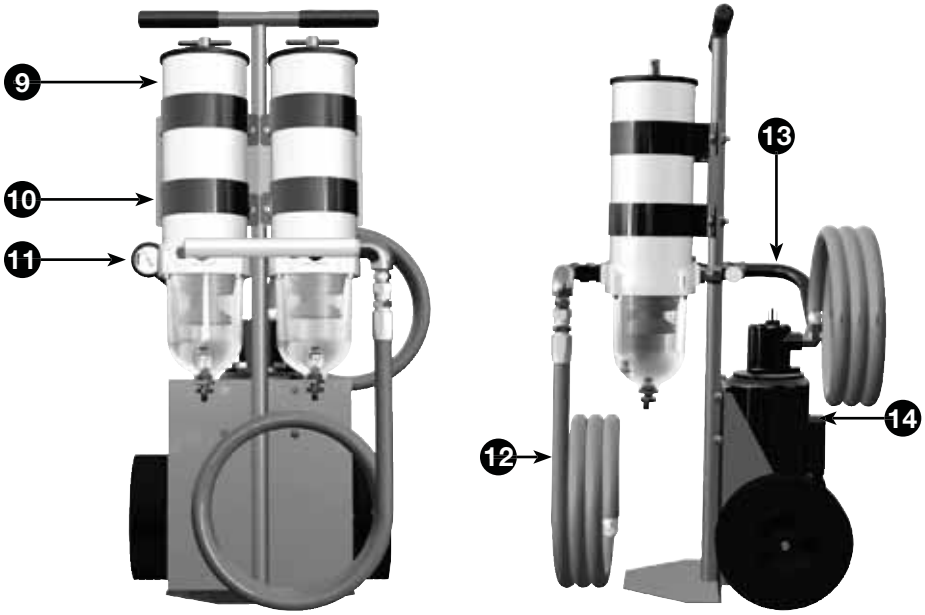

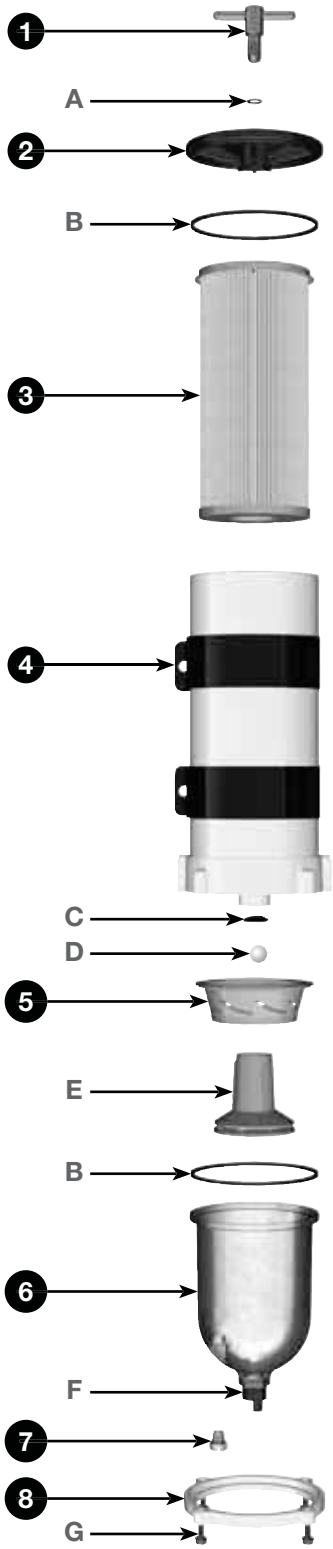

Part Number Index

0

PRODUCT	PAGE#
01SP-6S	A124, A125
025-MBL-02B	A2, A9
025-RAC-01	A2, A7, A15
025-RAC-02	A8, A15
025-RAC-05	A10, A15
025-RAC-09	A11, A15
025-RAC-10A	A2, A16
025-RAC-11	A3, A16
025-RAC-12	A3, A16
025-RAC-13	A3, A16
045-RAC-351	A21, A22

1

PRODUCT	PAGE#
10192	A35
10219	A31
11007	A150, A254, A254, A256, A256
11065	A265
11076	A267
11080	A310
11114	A310
11350	A252, A254, A256
11548	A309
11801	A310
11895	A269
11901	A310
12252	A310
12879	A312
14387	A19
14391	A297
15005	A252
15374	A252
16029	A132
16083	A132
18998	A267
19460	A269
19461	A269
1000FH	A249, A262, A265, A267, A269
1000FH10	A317
110A	A36
110A Fuel Filter/ Water Separator	A25
11-1048	A302
11-1220	A310
11-1626	A269
11-1632	A269
11-1761	A269
11-1962	A310
120A	A28, A36
120B Fuel Filter/ Water Separator	A29, A36
140R Fuel Filter/ Water Separator	A33, A36
1606B	A305
1I RK21057	A208

2

PRODUCT	PAGE#
20301	A206, A208, A210
20505	A132, A191
20707	A233
21381	A171, A187, A191
21410	A27
21501	A77
22021	A309
22029	A89
22099	A201
22209	A88
22231	A124, A125, A19
22249	A124, A125
22310	A177, A179
22311	A181, A193
22312	A65
22351	A68

22360	A43, A51
23013	A150
23082	A289
23084	A289
23179001	A212
2010PM-OR	A252
2010SM-OR	A252
2010TM-OR	A252
20151B	A220
2020PM-OR	A256
2020SM-OR	A256
2020TM-OR	A256, A317
2040PM-OR	A254
2040SM-OR	A254
2040TM-OR	A254
215R Fuel Filter/ Water Separator	A38, A41, A47
230R	A39, A41, A48
245R Fuel Filter/ Water Separator	A40, A41, A49

3

PRODUCT	PAGE#
30076	A191
300200	A152
30237	A77
30562	A169, A173, A175, A185
30563	A169, A171, A173, A175, A185, A187, A191
30604	A181, A193
30628	A164
30762	A65
30837	A164
30942	A68
30945	A164
30965	A193
31025	A218, A220
31749	A220
32280	A310
32282	A24
32311	A310
32312	A310
32314	A310
3150R	A56, A59, A68
31547-16	A181
3250R	A57, A59, A68
325R	A54, A59, A65
330R	A55, A59, A65
345RC	A70, A79
360RC	A71, A79
390RC	A72, A79

4

PRODUCT	PAGE#
40685	A132
4120R	A83
445R	A80
460R	A81
490R	A82

5

PRODUCT	PAGES
50016	A310
54039	A214
58066	A201
58132	A201, A280
58137	A201, A280
58179	A201, A280
58180	A201, A280
58181	A201, A280
500FG	A248, A249, A258
525B/V	A105

6

PRODUCT	PAGES
6400	A127
6401	A127
6707	A150
6120R	A121, A122
645R	A118, A122
660R	A119, A122
660R1210	A310
6706P	A150
6732P	A150
6732S	A150
6732T	A150
690R	A120, A122

7

PRODUCT	PAGE#
7125R	A283, A284
7125R10	A282
7125R1024	A282
7125R30	A137, A139, A282
7125R3024	A138, A139, A282
731000FH	A263
745R	A283
745R30	A133, A139, A282
75/B32009	A160, A163
75/B32016	A161, A163
751000FHX	A248, A250
75500FGX	A248, A250
75900FHX	A250
760R	A283
760R30	A134, A139, A282
771000FH	A248, A263
777R	A145
777R1230	A148
777R1230FH	A146, A148
790R	A283, A284
790R30	A135, A139, A153, A282
790R3024	A136, A139, A282
791000FHV	A263

8

PRODUCT	PAGE#
800D-5REC-D	A315, A317

9

PRODUCT	PAGE#
900FH	A248, A249, A260
911-N6-H8	A310
913-O10-H10	A132
913-O10-H12	A132
918-N8	A19

A

PRODUCT	PAGE#
ACV1350	A114
ACV4500	A108

B

PRODUCT	PAGES
B120	A166
B120P	A167, A194
B120S	A167, A194
B120T	A167, A194
B32001P	A194
B32001T	A194
B32002	A170, A171, A194
B32003	A172, A173, A194
B32004	A174
B32004P	A175, A194
B32004S	A175, A194
B32004T	A175, A194
B32007	A180
B32007P	A181
B32008P	A183, A194
B32009P	A185, A194
B32009S	A185
B32009T	A185
B32011	A195
B32012	A187, A195
B32016P	A189, A195
B32016S	A189, A195
B32016T	A189, A195
B32022	A195
B32025P	A195
B32025S	A195
B32025T	A195
B32026P	A195
B32026S	A195
B32026T	A195
B32030S	A195
B32030T	A195
B32038	A195
B32038P	A195
B32038T	A193
BK38100L	A93, A108, A110, A114

Questions? Contact Technical Support:
800 344 3286 or 209 521 7860 ext. 7555
e-mail: racortech@parker.com

C

PRODUCT	PAGE#
CH2.75	A114
CH3.5	A110
CH4.5	A114

F

PRODUCT	PAGE#
FPM-050	A313
FPM-PTC-12	A314
FS240	A197

I

PRODUCT	PAGE#
IN F19528	A213
IN F4595	A217
IN F830	A208
IN RK21057	A206, A210

P

PRODUCT	PAGE#
P3	A199, A278
P4	A199, A278
P5	A199, A278
PF F4604	A221
PF F829B	A205, A206
PF F831	A209, A210
PF101	A203
PF201	A203
PFF19528	A214
PFF32423	A215, A216
PFF32715	A238
PFF4595	A218
PFF4596	A219, A220
PFF4606	A222
PFF5500	A225
PFF5501	A226
PFF5502	A227
PFF5503	A228
PFF5504	A229
PFF5505	A230
PFF5509	A231
PFF5525	A232
PFF5527	A232, A233
PFF5550	A235
PFF5556	A236
PFF558095	A237
PFF830	A207
PFFDH12500	A212
PFFDW3525	A211, A211
PFFDW51125	A211
PFFG01	A239
PFFRK51216	A223
PFHH07500	A212
PFRK20567	A206, A208, A210
PS120 Strainer/ Pre-Filter	A17
PS120-01	A18
PS120-02	A18

R

PRODUCT	PAGES
R11S	A27
R11T	A27
R120P	A89, A167, A194
R120S	A89, A167, A194
R120T	A89, A167, A194
R125P	A140, A141
R125S	A140, A141
R125T	A140, A141
R12P	A31, A35
R12S	A31, A35
R12T	A31, A35
R13P	A31
R13S	A31
R13T	A31
R32281	A24
R45P	A77, A140
R45S	A77, A140
R45T	A77, A140
R58039-02	A280

R continued

PRODUCT	PAGE#
R58039-10	A280
R58039-30	A280
R58060-02	A280
R58060-10	A280
R58060-30	A280
R58095-02	A280
R58095-10	A280
R58095-30	A280
R60P	A77, A140
R60S	A77, A140
R60T	A77, A140
R90P	A77, A140, A141
R90S	A77, A140, A141
R90T	A77, A140, A141
REF600LE	A295, A296, A297
RK 10012	A31, A35, A77, A164
RK 1010	A31
RK 10109	A31, A164
RK 10110	A27, A43, A51, A88, A89
RK 10214	A31
RK 10215	A31, A164
RK 10216	A35
RK 10222	A35
RK 10503	A31, A35, A164, A216
RK 110037A	A256
RK 11028B	A254, A256
RK 11037A	A254, A317
RK 11073	A269
RK 11-1518	A309
RK 11-1570	A303
RK 11-1669	A306
RK 11-1679	A77, A252, A254, A256
RK 11-1777	A262
RK 11-1800-01	A254, A256
RK 11-1800-02	A254, A256
RK 11-1927-01	A254, A256, A317
RK 11-1938	A150 A254, A256, A317
RK 11-1939	A254, A256, A317
RK 11-1945	A252, A254, A256, A317
RK 11-1952	A254, A256
RK 11233	A305
RK 11340	A216
RK 11542	A150, A254, A256, A317
RK 11815-103	A256, A260, A262, A265, A267, A317
RK 11838	A252, A258
RK 11851-103	A254
RK 11861	A310, A311
RK 11862	A311
RK 11892	A265
RK 11911	A132
RK 12041	A43, A51
RK 12870	A301
RK 12871	A301
RK 15010B	A252
RK 15013D	A252
RK 15035	A252
RK 15078	A252
RK 15081	A252
RK 15211	A252
RK 15301	A252
RK 15329	A258
RK 15378	A252, A258
RK 15383-01	A252
RK 15383-02	A252
RK 15390	A258
RK 15391	A258
RK 16007	A132
RK 16070	A132
RK 16073	A132
RK 16076	A132
RK 16086	A132
RK 19473	A260, A262
RK 19475	A260, A262
RK 19476	A258, A260, A262, A307
RK 19486	A260
RK 19490-12	A311
RK 19506	A260, A262
RK 20011-01	A43
RK 20022	A27, A43, A51
RK 20126	A31, A43, A51, A65, A68, A88, A89, A124, A125, A150, A317
RK 20126	A164, A252, A254, A256

Questions? Contact Technical Support:
800 344 3286 or 209 521 7860 ext. 7555
e-mail: racortech@parker.com

RK 20163	A65
RK 20366	A65
RK 20725	A301
RK 20725-24	A301
RK 20726	A303
RK 20742	A43, A51
RK 21030	A65
RK 21067	A252, A254, A256
RK 21069	A201, A252, A299, A300
RK 21113-13-06	A77
RK 21113-13-11	A88, A124, A140, A141, A283, A284
RK 2113-313	A77
RK 21145	A77
RK 21156	A208, A210
RK 21199	A77
RK 21363	A27
RK 21364	A27
RK 21501	A140, A141, A283, A284
RK 22010	A65
RK 22061	A43, A51, A206
RK 22168	A89
RK 22244	A43, A51
RK 22266-01	A77
RK 22266-02	A77
RK 22266-03	A77
RK 22266-04	A77
RK 22323	A77, A88, A124
RK 22329	A77
RK 22333	A77, A88, A124
RK 22350-02	A43, A51
RK 22354-01	A43, A51
RK 22354-02	A43, A51
RK 22365-01	A77
RK 22368	A43, A51
RK 22371	A299, A300
RK 22423	A124, A125
RK 22425	A88
RK 22493	A77
RK 22610-01	A88
RK 22610-02	A88
RK 22616-01	A124
RK 22616-02	A124

RK 22724	A65
RK 22724-01	A65
RK 22798	A284, A88, A89, A140, A141, A283
RK 30051	A164
RK 30058	A125
RK 30063	A65, A68, A89, A125
RK 30076	A164
RK 30234	A77
RK 30467	A206
RK 30473	A164
RK 30476	A31, A35, A43, A51, A65, A68, A88, A89,
RK 30476	A124, A125, A140, A141, A150, A164, A201, A210, A283, A284
RK 30488	A216
RK 30765	A65
RK 30817	A27
RK 30876	A43, A51, A125
RK 30880	A299, A300
RK 30880E	A27
RK 30900	A68, A89, A125
RK 30902	A140, A283
RK 30925	A68, A89 A125
RK 30964	A31, A88, A89, A124, A125, A141, A143, A284, A299, A300
RK 30965	A68, A125
RK 31390-05-03	A13
RK 31391	A13
RK 31449	A218
RK 31547	A68
RK 31923	A310
RK 32036	A308
RK 32204	A150, A254, A256
RK 32313	A310
RK 51216	A19, A224
RK 51217	A19
RK 58075	A201
RK 58109	A201
RK_10012	A183, A189
RK_10503	A169, A173, A175, A177, A179, A183, A185, A189
RK_20126	A189
RK_30076	A169, A171, A173, A175, A185, A187

R continued

PRODUCT	PAGE#
RK_30476	A183
RK_30965	A177, A179, A181
RK012T-8-8	A150
RK10109	A183, A189
RK10215	A183
RK10215	A189
RK11-1969	A306
RK11-1970	A140, A141, A283, A284
RK11-1978	A254, A256
RK11-2009	A254
RK11-2010	A256
RK12963	A151
RK14321	A304
RK14329	A304
RK14332	A304
RK15405	A252
RK19490-24	A311
RK20011-01	A51
RK20025-01	A43, A51
RK20046-01	A43, A51
RK20049-01	A43, A51
RK20075-01	A43, A51
RK20505	A167, A171, A187
RK20717	A43, A51
RK21069	A280
RK21539	A167
RK21640	A177, A179, A181, A193
RK22350-02	A233
RK22098	A124, A125
RK22628	A298
RK22895	A140, A283, A286
RK22902	A140, A143, A283
RK22933	A140, A144, A154, A283, A286
RK22934	A140, A141, A144, A154, A283, A284, A286
RK22936	A298
RK22943	A140, A143, A283
RK22998	A88, A89, A124, A125
RK23007	A150
RK23017	A150
RK23018	A150
RK23019	A150
RK23045	A108, A110, A150
RK23046	A150
RK23080	A150
RK23085	A141, A284, A286
RK23087	A141, A144
RK23087	A284, A286
RK23088	A141, A143, A284
RK30051	A169, A171, A173, A175, A185, A187, A191
RK30063	A167, A177, A179, A181, A193
RK30287	A169, A173, A175, A179
RK30467	A208
RK30475	A169, A171, A173, A175, A185, A187, A191
RK30476	A187, A189, A191, A280
RK30480	A167, A177, A179, A181, A193
RK30745-01	A169, A171, A173, A175, A185, A187, A191
RK30880	A167, A169, A171, A173, A175, A177, A179, A181, A183, A185, A187, A189, A191, A193
RK30895	A169, A171, A173, A175, A185, A187, A191
RK30900	A167, A177, A179, A181, A193
RK30924	A169, A171, A173, A175, A185, A187, A191
RK30925	A167, A177, A179, A181, A193
RK30965	A167
RK31391	A5
RK31547	A193
RK31605	A298
RK32037	A308
RK32274	A24
RK58075	A280
RK58107	A201, A280
RK6733	A150
RKP1912	A292
RKP1924	A292
RKSV7008	A150
RKVFG80	A150

S

PRODUCT	PAGE#
S238P	A194
S2501	A5, A13
S2502	A5, A13
S3201	A168
S3201P	A169, A194
S3201S	A169, A194
S3201T	A169, A194
S3202	A171, A194
S3203	A173, A194
S3204P	A175, A194
S3204S	A175, A194
S3204T	A175, A194
S3205	A176, A177, A194
S3206	A178, A179, A194
S3207P	A68, A181, A194
S3207S	A68, A194
S3207T	A68, A194
S3208P	A183, A194
S3208S	A194
S3208T	A194
S3209P	A185, A194
S3209S	A185, A194
S3209T	A185, A194
S3211	A195
S3212	A187, A195
S3216P	A189, A195
S3216S	A189, A195
S3216T	A189, A195
S3222	A195
S3223	A195
S3225P	A65, A195
S3225S	A65, A195
S3225T	A65, A195
S3226P	A65, A195
S3226S	A65, A195
S3226T	A65, A195
S3229	A191, A195
S3230P	A195
S3230S	A195
S3230T	A195
S3238	A68, A193, A195
S3238P	A68, A195

W

PRODUCT	PAGE#
WFH424	A91
WFH4732	A93
WFH4736	A93
WFH4738	A93
WFH5038X	A105
WFH525	A98, A103, A112
WFH525/ACV	A99, A103 A112
WFH525EHA	A100, A103
WFH5726B	A105, A108, A110
WFH5726X	A93, A114
WFH5730P	A93, A105, A108, A110
WFH5730X	A114
WFH5731B	A114
WFH5731C	A93, A114
WFH5731K	A93, A105, A108, A110
WFH5731P	A108
WFH5732	A105, A108, A110, A114
WFH5732/30	A105, A108, A110, A114
WFH5736	A105, A108, A110
WFH5736R	A114
WFH5736S	A108, A114
WFH5738VX	A110
WFH5738X	A108, A114
WFH5742	A93, A105, A108, A114
WFH5742UX	A110
WFH5750K	A105, A108, A110
WFH5750K/30	A105, A108, A110
WFH5760	A105, A108, A110, A93
WFH5760X	A114
WFH750K	A93
WHF500	A97, A103

Questions? Contact Technical Support:
800 344 3286 or 209 521 7860 ext. 7555
e-mail: racortech@parker.com

Section: B
Marine Fuel Filtration

aerospace
climate control
electromechanical
filtration
fluid & gas handling
hydraulics
pneumatics
process control
sealing & shielding

Parker Racor

ENGINEERING YOUR SUCCESS.

Table of Contents

Fuel Standards B1
Inline Gasoline Series B3
OEM Gasoline Series B9
Parfit Products B15
Gasoline Spin-On Series B16
120R MAM Spin-On Fuel Filter/Water Separator B29
200 Series Spin-On Fuel Filter/Water Separator B33
400 Series Priming Spin-On Fuel Filter/Water Separator B38
Marine 800 Series High Flow Fuel Filter/Water Separator B42
Marine FBO Refueling Filter System B51
Marine Turbine Series B56
Fuel/Air Separators B83
RFF Fuel Filter Funnels B90
Marine Fittings B91
Marine Accessories B97
- No-spill Filler Spout B97
- Bowl Wrench B97
- Parker Super O-lube B97
- Hose/Fittings B98
- Water Probe Kits B100
- Water Sensor B101
- Vacuum Gauges B103
- 2-Cycle Synthetic Engine Oil B105
- Fuel Polishing B106

Part Number Index B108

Fuel Standards

Don't be caught in the water without a quality Racor Marine Accessory. Whether it's hoses, gauges, or electronic water detection systems, Racor offers it all. All accessory parts are engineered to precisely fit and enhance your Racor product. Experienced sailors trust their engines, their livelihood and even their lives to Racor. Shouldn't you?

American Bureau of Shipping (ABS), Product Type Approval (Certification #00-SF37508-X)

Diesel Fuel Filter/Water Separators: 500MA, 900MA, 1000MA, 731000MA, 75500MAX, 75900MAX, 751000MAX, 771000MA and 791000MAV.

American Boat and Yacht Council (ABYC), Inc., Individual Standard, H-33 (diesel fuel systems) and H-24 (gasoline fuel systems).

American Society for Testing and Materials (ASTM), ASTMF-1201.

National Marine Manufacturing Association (NMMA), member.

Bureau Veritas Marine, Product Type Approval (05634/BXBV)

Racor Fuel Filter/Water Separators: 500MA, 900MA, 1000MA, 731000MA, 75500MAX, 75900MAX, 751000MAX, 771000MA, 791000MAV, 812, 75812 and 79812.

UL Recognized Component

Marine Electrical and Fuel Systems

Diesel fuel filter cartridges:
B32001M to B32012M, S3201UL to S3212UL and S3234UL.

Gasoline fuel filter cartridges:
S3201UL, S3204UL, S3220UL, S3221TUL, S3228TUL, S3232UL, B32020MAM and B32021MAM .

Diesel/Gasoline filter cartridges:
R12SUL, S3201UL, S3204UL, R24SUL, R26SUL, R15TUL, R20TUL and R25TUL.

USCG
US Coast Guard Approved

United States Coast Guard accepted for use aboard inspected vessels per 33 CFR (Code of Federal Regulations).

500MA, 900MA, 900MAM, 1000MA, 1000MAM, 731000MA, 731000MAM and 771000MA.

MARINE UL LISTED

See next page.

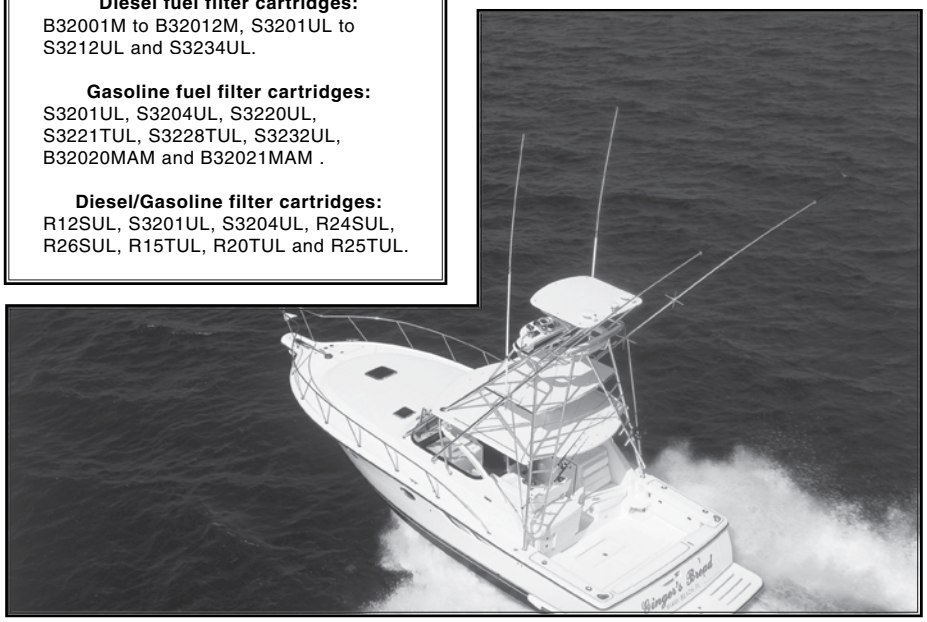

The identities above are part of a Type Approval System and may be applicable to many Racor products. Marine certifications that are specific to certain Racor models are listed below their respective logo and certification number (or program).

Fuel Standards

FBO-14-MA

Underwriters Laboratories (UL), Inc. UL classified for CE systems.
In accordance with ISO 11088.

Diesel fuel filters/water separators:

110, 110A, 120RMAM, 220CMAM, 220RMAM, 225CMAM, 225RMAM, 445MAM, 460MAM, 490MAM, 4120MAM, 500MA, 500MAM, 900MA, 900MAM, 1000MA, 1000MAM, 75900MA, 75900MAM, 75900MAV, 731000MA, 731000MAM, 751000MA, 751000MAM, 751000/MAV, 751000MAVM, 771000MA, 771000MAM, 791000MA, 791000MAM, 791000MAV, 800D-12, 850, 320R-MAM-01, 320R-MAM-04, 75500MAX, 75500MAXM, 75900MAX, 75900MAXM, 751000MAX, 751000MAXM, 215RMAM, 230RMAM and 245RMAM.

Diesel fuel filters/water separators additionally classified in accordance with ISO 10088:

110, 110A, 120RMAM, 220CMAM, 220RMAM, 225CMAM, 225RMAM, 445MAM, 460MAM, 75900MA, 75900MAM, 75900MAV, 731000MA, 731000MAM, 751000MA, 751000MAM, 751000/MAV, 751000MAVM, 751000MAX, 751000MAXM, 771000MA, 771000MAM, 791000MA, 791000MAM, 791000MAV, 800D-12, 850, 320R-MAM-01, 320R-MAM-04, 75500MAX, 75500MAXM, 75900MAX, 75900MAXM, 500MA, 500MAM, 900MA, 900MAM, 1000MA and 1000MAM.

Gasoline fuel filters/water separators:

110, 110A, 120RMAM, 220MAMG, 225MAMG, 500MAM, 900MAM, 1000MAM, 731000MAM, 75900MAM, 751000MAM, 751000MAVM, 771000MAM, 791000MAM, 791000MAVM, 32ORMAM-01, 32ORMAM-04, 320R-RAC-02, 660RRAC02, 75500MAXM, 75900MAXM, 751000MAXM, 3120R-RAC-32 and 120R-RAC-02.
Gasoline fuel filters/water separators additionally classified in accordance with ISO 10088:

110, 110A, 120RMAM, 220MAMG, 225MAMG, 500MAM, 900MAM, 1000MAM, 731000MAM, 75900MAM, 751000MAM, 751000MAVM, 771000MAM, 791000MAM, 32ORMAM-01, 32ORMAM-04, 320R-RAC-02, 660RRAC02, 75500MAXM, 75900MA, 75900MAXM, 751000MAXM and 791000MAVM.

025-RAC

The 025-RAC In-line Gasoline Filter Series keeps your fuel clean and dry, because having grime and water in your fuel spells disaster. More than ever, today's high performance gasoline engines require clean, dry fuel. Standard fuel filters simply succumb from normal usage, and don't offer the improved features, durability and peace-of-mind that comes with Racor fuel filters. Experienced sailors trust their engines, their livelihood, and even their lives to Racor's high quality marine products. Shouldn't you?

Features and Benefits

- **Installs quickly.**
- **Filters gasoline or gasoline/oil blended fuels.**
- **Separates water (025-RAC-02 model only).**
- **Compact design.**
- **Heavy duty construction.**
- **Easy to service.**

Applications

- **Small outboard engines.**
- **Personal watercraft.**
- **Small gensets.**
- **Snow machines.**
- **Lawn mowers.**
- **Any small gasoline engine.**

025-RAC-01 **025-RAC-02** **025-RAC-05**

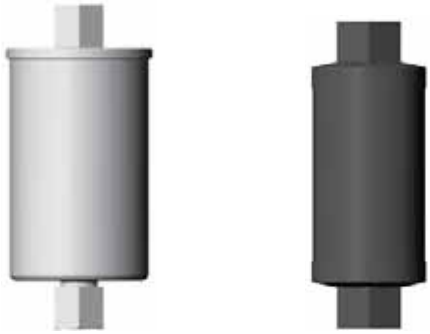

025-RAC-09 **025-RAC-10A**

025-RAC-11 **025-RAC-12** **025-RAC-13**

MEMBER ABYC Setting Standards for Safer Boating®

NMMA TYPE ACCEPTED

Questions? Contact Technical Support:
800 344 3286 or 209 521 7860 ext. 7555
e-mail: racortech@parker.com

Parker Racor

In-Line Gasoline Series

In-Line Gasoline Series Overview

Specifications	025-RAC-01	025-RAC-02	025-RAC-05	025-RAC-09
Maximum Flow Rate	25 GPH (95 LPH)	25 GPH (95 LPH)	25 GPH (95 LPH)	35 GPH (132 LPH)
Application	Outboard	Outboard	Inboard	Inboard
Port Size	1/4”-18 NPT	1/4”-18 NPT	5/16” Hose Bead	3/8” NPT
Housing Material	[1]Anodized diecast aluminum head with clear, reusable plastic bowl.	[1]Anodized diecast aluminum head with clear, reusable plastic bowl. Separates water.	All steel with black “E” coating for corrosion resistance.	All stainless steel.
Replacement Element	S2501 (straining element)	S2502 (Aquabloc®II element)	N/A	N/A
Micron Rating	250	10	10	116
Min. Service Clearance	3.0 in. (7.6 cm)	3.0 in. (7.6 cm)	1.0 in. (2.5 cm)	1.0 in. (2.5 cm)
Height	4.3 in. (10.9 cm)	4.3 in. (10.9 cm)	4.8 in. (12.1 cm)	4.5 in. (11.4)
Diameter	2.1 in. (5.3 cm)	2.1 in. (5.3 cm)	2.3 in. (5.7 cm)	2.2 in. (5.6 cm)
Weight (dry)	0.3 lb (0.14 kg)	0.3 lb (0.14 kg)	0.3 lb (0.14 kg)	0.3 lb (0.14 kg)
Max. Working Pressure[2]	100 PSI (690 kPa)	100 PSI (690 kPa)	30 PSI (207 kPa)	30 PSI (207 kPa)
H_2O Removal Efficiency	N/A	99%	N/A	N/A
Case Quantity	6	6	12	6
Ambient Fuel Temperature	-10° to +180°F (-23° to +82°C)			

Special Notes: [1]Anodizing is a chemical process that provides corrosion resistance.
[2]Pressure installations acceptable up to maximum amount shown - vacuum installations recommended.

Questions? Contact Technical Support:
800 344 3286 or 209 521 7860 ext. 7555
e-mail: racortech@parker.com

In-Line Gasoline Series Overview

Specifications	025-RAC-10A	025-RAC-11	025-RAC-12	025-RAC-13
Maximum Flow Rate	35 GPH (132 LPH)	12 GPH (45 LPH)	12 GPH (45 LPH)	12 GPH (45 LPH)
Application	Inboard	Outboard	Outboard	Outboard
Port Size	½” NPT	¼” Hose Bead	5/16” Hose Bead	3/8” Hose Bead
Housing Material	All steel, painted black.	Plastic	Plastic	Plastic
Replacement Element	N/A	N/A	N/A	N/A
Micron Rating	104	12	12	12
Min. Service Clearance	1.0 in. (2.5 cm)	1.0 in. (2.5 cm)	1.0 in. (2.5 cm)	1.0 in. (2.5 cm)
Height	4.2 in. (10.7 cm)	3.5 in. (8.9 cm)	3.5 in. (8.9 cm)	3.5 in. (8.9 cm)
Diameter	1.9 in. (4.8 cm)	2.1 in. (5.3 cm)	2.1 in. (5.3 cm)	2.1 in. (5.3 cm)
Weight (dry)	0.6 lb (0.27 kg)	0.1 lb (0.05 kg)	0.1 lb (0.05 kg)	0.1 lb (0.05 kg)
Max. Working Pressure[1]	100 PSI (690 kPa)	10 PSI (69 kPa)	10 PSI (69 kPa)	10 lb (69 kPa)
H_2O Removal Efficiency	N/A	N/A	N/A	N/A
Case Quantity	6	1	1	1
Ambient Fuel Temperature	-10° to +180°F (-23° to +82°C)			

Special Notes: [2]Pressure installations acceptable up to maximum amount shown - vacuum installations recommended.

In-Line Gasoline Series

How to Order

(The example below illustrates how a part number is constructed).

(Basic Model Number)	Specify a Micron Rating: (for 250 micron) or (for 10 micron)
Warning! For outboard engines, personal watercraft and other applications, do not use this filter with inboard engines or stern drive boats; use Racor U.L. listed marine filters.	

Mounting Information

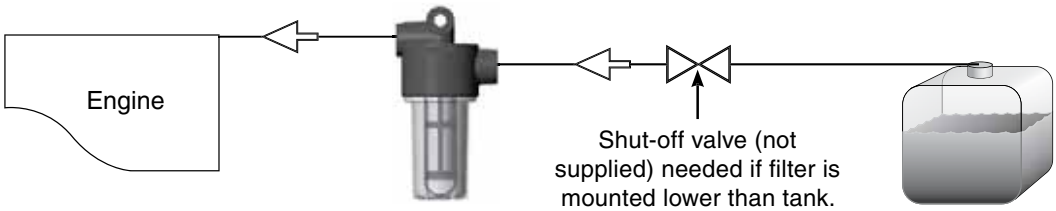

Mounting Bolt Pattern

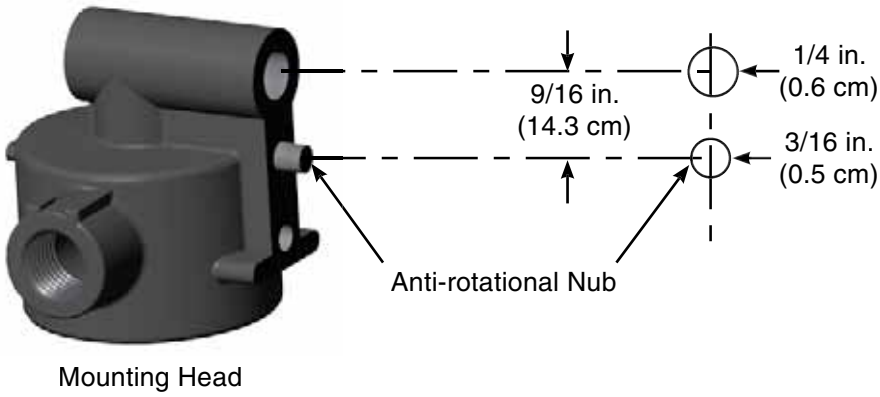

Questions? Contact Technical Support:
800 344 3286 or 209 521 7860 ext. 7555
e-mail: racortech@parker.com

Replacement Parts

025-RAC-01 and 025-RAC-02

	Part Number	Description
1.	**RK 31390-05-03**	Mounting Head Kit (¼”-18 NPT Ports) (includes #4)

Replacement Elements (includes #4)

2.	**S2501**	250 micron (for 025-RAC-01)
3.	**S2502**	10 micron (for 025-RAC-02)
4.	**N/A**	Bowl O-ring
5.	**RK 31391**	Clear Bowl Kit (includes #4)

Note:
025-RAC-05, **025-RAC-09**, **025-RAC-10A**
025-RAC-11, **025-RAC-12, and 025-RAC-13**

No replacement parts available. Order complete assembly for replacement.

In-Line Gasoline Series

Test Data

Test data not available for all assemblies.

SEA J1839 Water Separation

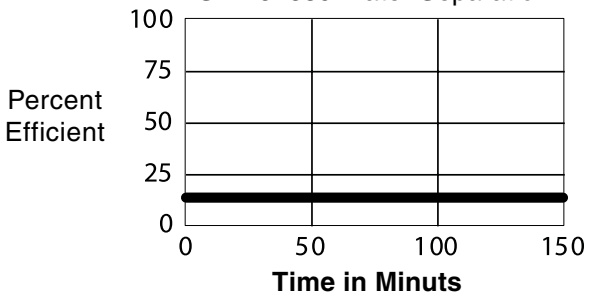

SEA J905 Fuel Flow Restriction

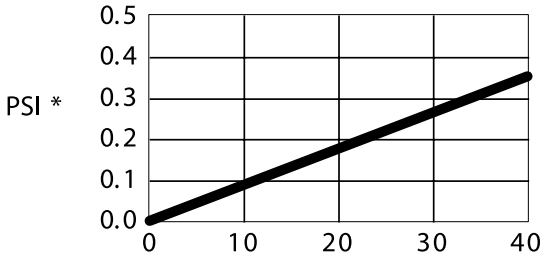

025-RAC-02 only

SEA J1839 Water Separation

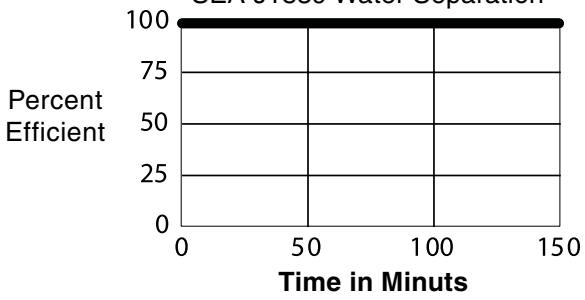

SEA J905 Fuel Flow Restriction

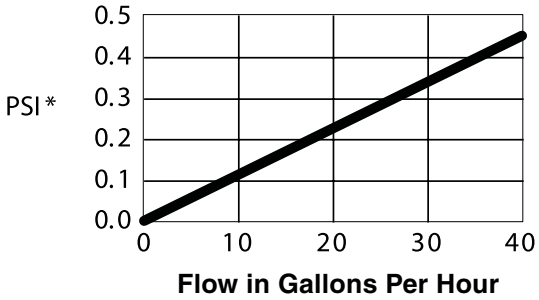

SEA J905 Solids Capacity
(using fine test dust @ 25 GPH)

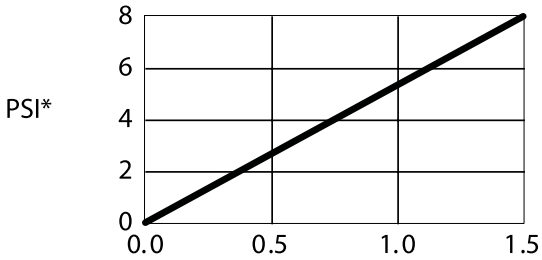

(PSI X 2.036 = inHg) (PSI X 6.895 = kPa)

Test results are from controlled laboratory testing. Field results may vary.

OEM Gasoline Series

Now, owners of inboard or outboard engines can get smoother operation and longer life - all in one easy spin onto their existing engine filter heads. There's a choice of rugged, reusable clear bowl with a self-venting drain or a metal bowl with drain plug for inboard applications. Metal bowls are UL-listed and USCG accepted, clear bowls are for outboard applications only. These filters also feature high capacity Aquabloc®II elements that remove 99% of free water, and sediment down to 10 micron.

These OEM Spin-On gasoline filters were designed to fit most Quicksilver, MerCruiser and OMC applications. See Specification chart on next page for more information.

- **Inboard gasoline engines must use filters equipped with metal bowls (MAM models).**
- **Outboard gasoline engines use either clear or metal bowls.**

B32013

B32014

B32020MAM

B32021MAM

Questions? Contact Technical Support:
800 344 3286 or 209 521 7860 ext. 7555
e-mail: racortech@parker.com

OEM Gasoline Series

OEM Gasoline Series Overview

Underwriter's Laboratories Recognized Component

Underwriter's Laboratories Recognized Component

Specifications	B32013	B32014	B32020MAM	B32021MAM
Typical Application	Quicksilver	OMC	MerCruiser	OMC
Engine Type	Outboard (only)	Outboard (only)	Inboard/Outboard	Inboard/Outboard
UL Recognized Component	No	No	Yes	Yes
Maximum Flow Rate	60 GPH (227 LPH)	60 GPH (227 LPH)	60 GPH (227 LPH)	60 GPH (227 LPH)
Replacement Element	S3213	S3214	S3220UL	S3221TUL
Center Threads	11/16”-16	1”-12	11/16”-16	1”-12
Height	7.2 in. (18.2 cm)	7.2 in. (18.2 cm)	6.5 in. (16.7 cm)	6.5 in. (16.7 cm)
Diameter	3.8 in. (9.5 cm)	3.8 in. (9.5 cm)	3.8 in. (9.5 cm)	3.8 in. (9.5 cm)
Weight (dry)	1.2 lb (0.5 kg)	1.2 lb (0.5 kg)	1.6 lb (0.7 kg)	1.6 lb (0.7 kg)
Clean Pressure Drop	0.6 PSI (4.32 kPa)	0.6 PSI (4.32 kPa)	0.6 PSI (4.32 kPa)	0.6 PSI (4.32 kPa)
Under Bowl Clearance	1.0 in. (2.5 cm)	1.0 in. (2.5 cm)	1.0 in. (2.5 cm)	1.0 in. (2.5 cm)
Bowl Type	Clear	Clear	Metal	Metal
Water Removal Efficiency	99%	99%	99%	99%
Case Quantity	12	12	12	12
Ambient Fuel Temperature	-40° to +250°F (-40° to +121°C)			

Questions? Contact Technical Support:
800 344 3286 or 209 521 7860 ext. 7555
e-mail: racortech@parker.com

B32013 Cross-Reference

Aquapower	Baldwin	Fram	Quicksilver	OMC	Sierra	Wix	Yamaha
6001	BF791	PS3808	35-805269-1 35-807172	-	18-7845	33225	ABA-FUEL-FLTR

B32014 Cross-Reference

Aquapower	Baldwin	Fram	Quicksilver	OMC	Sierra	Wix	Yamaha
6040	-	-	-	502905	-	-	-

OEM Gasoline Series

Replacement Parts

B32013 and B32014

	Part Number	Description
1.	**30768**	Square Cut Gasket
2.	Replacement Elements (includes #'s 1 and 3)	
	S3213	For B32013 (10 micron)
	S3214	For B32014 (10 micron)
3.	**RK 30076**	Bowl O-ring
4.	**RK 30475**	Clear Bowl Kit (includes #'s 3 and 5)
5.	**RK 30476**	Self-venting Drain Kit

Additional Parts (not shown)

22099	Drain Gasket
22313	O-ring/Gasket Pack (includes #'s 1 and 3)

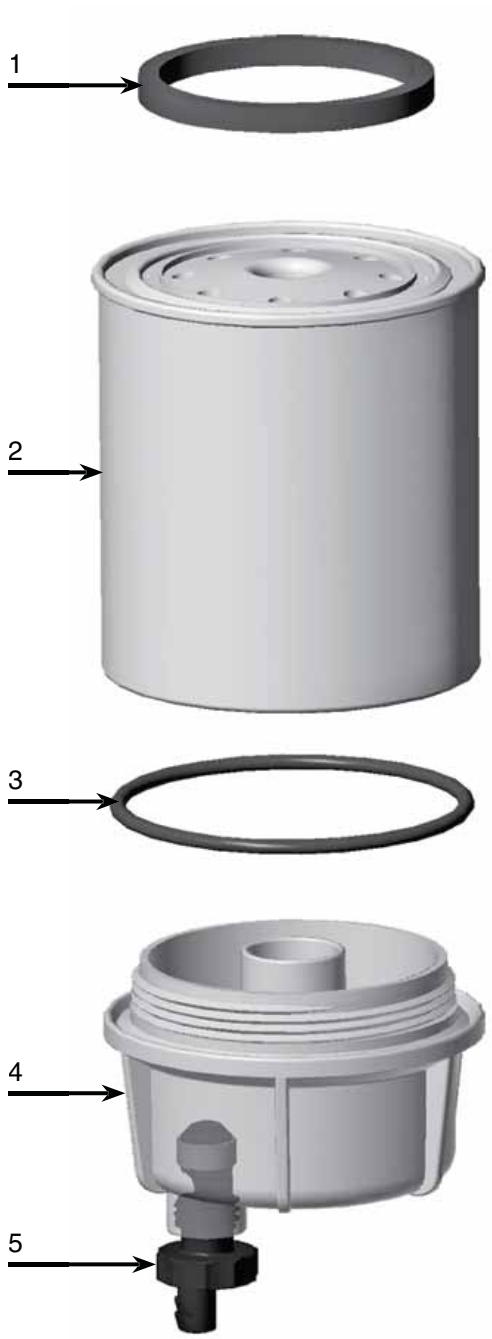

Questions? Contact Technical Support:
800 344 3286 or 209 521 7860 ext. 7555
e-mail: racortech@parker.com

B32020MAM Cross-Reference

Aquapower	Baldwin	Fram	Quicksilver	OMC	Sierra	Volvo	Wix
6031	BF791	PS3808	35-807172 35-60494-1	-	1807850	855686-0/-2	33225
Yamaha: MAR-23452-00-00 (S3220UL - no bowl)							

B32021MAM Cross-Reference

Aquapower	Baldwin	Fram	Quicksilver	OMC	Sierra	Volvo	Wix
6040	-	-	-	174144	-	-	-

Underwriter's Laboratories
Recognized Component

OEM Gasoline Series

Replacement Parts

B32020MAM and **B32021MAM**

	Part Number	Description
1.	**30768**	Square Cut Gasket
2.	Replacement Elements (includes #'s 1 and 3)	
	S3220UL	For B32020MAM (10 micron)
	S3221TUL	For B32021MAM (10 micron)
3.	**RK 30076**	Bowl O-ring
4.	**RK 30473-02**	Metal Bowl Kit (includes #'s 3 and 5)
5.	**918-N6**	Metal Plug (3/8" NPT)

Additional Parts (not shown)

22313	O-ring/Gasket Pack (includes #'s 1 and 3)

Underwriter's Laboratories Recognized Component

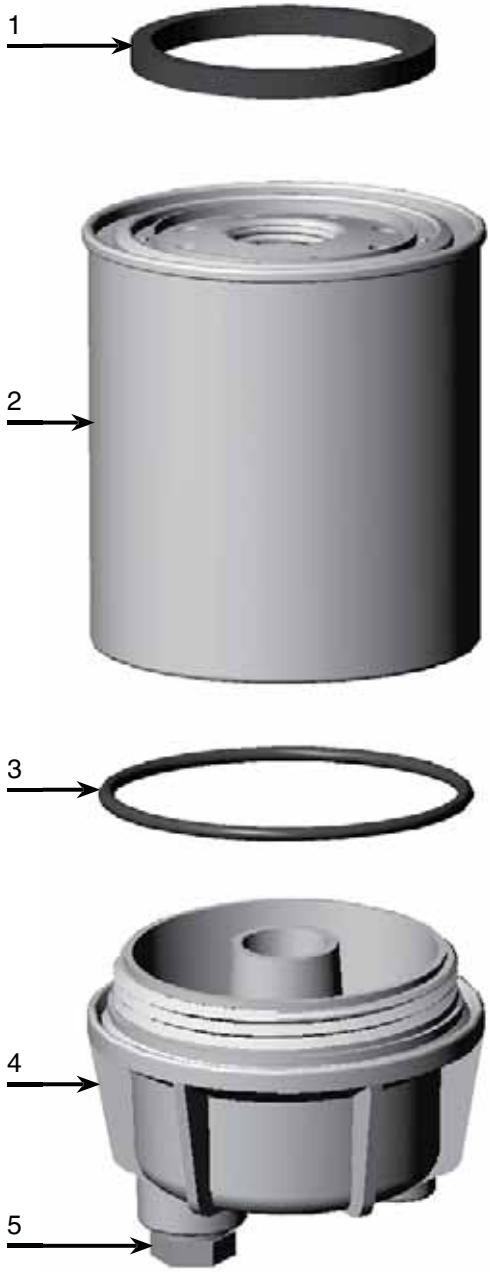

Questions? Contact Technical Support:
800 344 3286 or 209 521 7860 ext. 7555
e-mail: racortech@parker.com

PFF5510

The PFF5510 gasoline fuel filter/water separator replaces standard fuel filters found on most Mercury, Mercruiser, Yamaha, Suzuki, Honda and Tohatsu marine gasoline applications. It fits these popular engine applications with it's 11/16"-16 center threads and features 10 micron Aquabloc™II media to outperform other gasoline fuel filters in inboard or outboard, two or four cycle applications. In fact, the PFF5510 performance exceeds all OEM requirements, and is suitable for all low or high pressure injection systems.

Developed by Racor engineers, the PFF5510 provides a durable, high performance filter element that is treated inside and out with a highly corrosion resistant coating to eliminate rust-through. Just by installing Racor filters, you know you're doing everything you can to protect your equipment, extend its life cycle and effectiveness, and improve your bottom line.

Specifications	PFF5510
Micron Rating	10
Center Threads	11/16"-16
Height	4.2 in (10.7 cm)
Diameter	3.6 in. (9.1 cm)
Weight (dry)	0.9 lb (0.4 kg)
H_2O Removal Efficiency	99%
Ambient Fuel Temperature	-40° to +250°F (-40° to +121°C)
Max Fuel Temperature	190°F (32°C)

SAE J1985 Particle Removal Efficiency

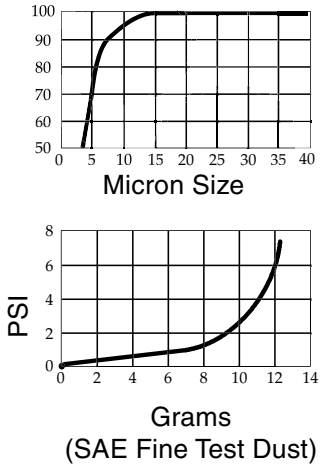

Cross Reference Information					
Fleet Guard	Wix	Luber Finer	Baldwin	Donaldson	Fram
PF5059	33225	LFF3808	BF791	P550677	PS3808

Gasoline Spin-On Series

Gasoline Spin-On Series

Don't be caught in the water without one of these Racor gasoline Spin-On series filters. These filters are designed for high performance applications, and with flow rates between 30 and 120 GPH your engine will perform better than ever with clean, water-free fuel. These filters are coated with a durable electrostatically applied powder coating for superior corrosion resistance. That's the quality you've learned to expect and get only from Racor.

This series features a high capacity Aquabloc®II filter element that removes sediment down to 10 micron and 99% of water. This Spin-On filter design is simple to replace and the reusable clear plastic or metal contaminant collection bowls feature a self-venting drain, or metal plug, for removing unwanted muck and water.

120R-RAC-01

120R-RAC-02

320R-RAC-01

320R-RAC-02

490R-RAC-01

660R-RAC-01

660R-RAC-02

3120R-RAC-32

ASTM INTERNATIONAL

NMMA™ TYPE ACCEPTED

MEMBER ABYC Setting Standards for Safer Boating®

Questions? Contact Technical Support:
800 344 3286 or 209 521 7860 ext. 7555
e-mail: racortech@parker.com

Gasoline Spin-On Series Overview

Applies to
all models.

Specifications	120R-RAC-01	120R-RAC-02	320R-RAC-01	320R-RAC-02
Application:				
Inboard	No	Yes	No	Yes
Outboard	Yes	Yes	Yes	Yes
Max. Flow Rate	30 GPH (114 LPH)	30 GPH (114 LPH)	60 GPH (227 LPH)	60 GPH (227 LPH)
Center Threads	M18 x 1.5	M18 x 1.5	1”-14	1”-14
Port Size	¼”-18 NPTF	¼”-18 NPTF	¼”-18 NPTF	¼”-18 NPTF
Number of Ports:				
Inlets	2	2	2	2
Outlets	2	2	1	1
Height	6.5 in. (16.5 cm)	6.0 in. (15.2 cm)	9.3 in. (23.6 cm)	9.0 in. (22.8 cm)
Width	3.2 in. (8.1 cm)	3.2 in. (8.1 cm)	4.0 in. (10.2 cm)	4.0 in. (10.2 cm)
Depth	3.2 in. (8.1 cm)	3.2 in. (8.1 cm)	4.0 in. (10.2cm)	4.0 in. (10.2cm)
Weight (dry)	1.1 lb (0.5 kg)	1.1 lb (0.5 kg)	2.0 lb (0.90 kg)	2.0 lb (0.90 kg)
Clean Pressure Drop	0.15 PSI (1.03 kPa)	0.15 PSI (1.03 kPa)	0.61 PSI (4.23 kPa)	0.61 PSI (4.23 kPa)
Max. Pressure	7 PSI (0.5 bar)	7 PSI (0.5 bar)	7 PSI (0.5 bar)	7 PSI (0.5 bar)
Underbowl Clearance	1.0 in. (2.5 cm)	1.0 in. (2.5 cm)	1.0 in. (2.5 cm)	1.0 in. (2.5 cm)
H_2O Removal Efficiency	99%	99%	99%	99%
Ambient Fuel Temperature	-40° to +250°F (-40° to +121°C)			
Max. Fuel Temperature	190°F (32°C)			

Gasoline Spin-On Series

Gasoline Spin-On Series Overview

Applies to all models.

Specifications	490R-RAC-01	660R-RAC-01	660R-RAC-02	3120R-RAC-32
Application: ***Inboard*** ***Outboard***	 No Yes	 No Yes	 Yes Yes	 Yes Yes
Max. Flow Rate	90 GPH (340 LPH)	90 GPH (340 LPH)	90 GPH (340 LPH)	120 GPH (454 LPH)
Center Threads	1”-14	1”-14	1”-14	1”-14
Port Size	3/8”-18 NPTF	3/8”-18 NPTF	3/8”-18 NPTF	½”-14 NPTF
Number of Ports: ***Inlets*** ***Outlets***	 2 2	 2 2	 2 2	 1 1
Height	9.9 in. (25.1 cm)	11.0 in. (27.9 cm)	10.5 in. (26.7 cm)	10.4 in. (26.4 cm)
Width	4.5 in. (11.4 cm)	4.2 in. (10.7 cm)	4.2 in. (10.7 cm)	4.0 in. (10.2 cm)
Depth	4.8 in. (12.1 cm)	4.5 in. (11.4 cm)	4.5 in. (11.4 cm)	5.0 in. (12.7 cm)
Weight (dry)	2.6 lb (1.2 kg)	3.0 lb (1.4 kg)	3.0 lb (1.4 kg)	2.0 lb (0.90 kg)
Clean Pressure Drop	0.95 PSI (6.5 kPa)	0.61 PSI (4.23 kPa)	0.61 PSI (4.23 kPa)	0.15 PSI (1.03 kPa)
Max. Pressure	7 PSI (0.5 bar)	7 PSI (0.5 bar)	7 PSI (0.5 bar)	7 PSI (0.5 bar)
Underbowl Clearance	1.0 in. (2.5 cm)	1.0 in. (2.5 cm)	1.0 in. (2.5 cm)	1.0 in. (2.5 cm)
H_2O Removal Efficiency	99%	99%	99%	99%
Ambient Fuel Temperature	-40° to +250°F (-40° to +121°C)			
Max. Fuel Temperature	190°F (32°C)			

Questions? Contact Technical Support:
800 344 3286 or 209 521 7860 ext. 7555
e-mail: racortech@parker.com

How to Order

(The example below illustrates how a part number is constructed).

120R-RAC	-01
Basic Model Number	**-01** (for clear bowl) **-02** (for metal bowl)

Mounting Information

Top View

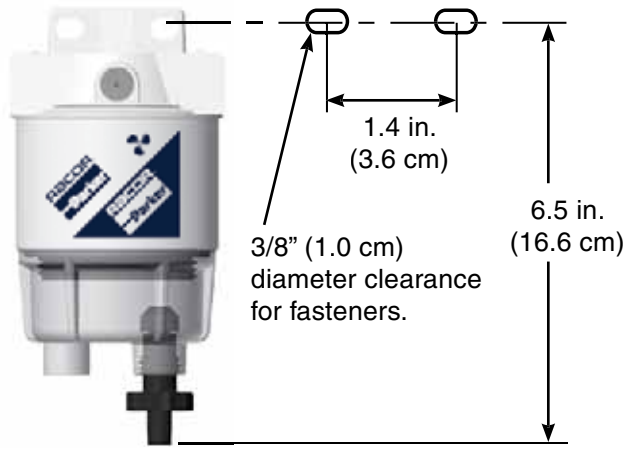

Test Data

(Test results are from controlled laboratory testing. Field results may vary.)

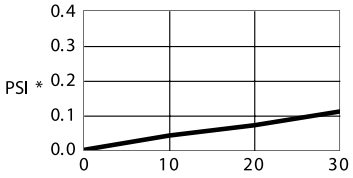

Flow (GPH)
SAE J905 Flow Restriction

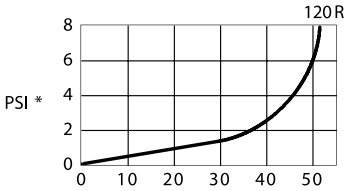

Grams
SAE J905 Solid Capacity Test
(using SOFTC-2A; S3240 Element)

PSI x 2.036 = inHg. (PSI x 6.895 = kPa)

Gasoline Spin-On Series

Replacement Parts

120R-RAC-01 and 120R-RAC-02

	Part Number	Description
1.	**RK 10214-01**	Head Kit (includes #2)
	10224	3/8" SAE Plug
2.	**RK 10503**	Gasket Kit
3.	Replacement Element (includes #2)	
	S3240	10 micron
4.	**RK 10012**	Bowl O-ring Kit
5.	**RK 10222**	Clear Bowl Kit (includes #'s 4 and 6)
6.	**RK 30476**	Self-venting Drain Kit
7.	R**K10553**	Metal Bowl (includes #'s 4, 6 and 7)
8.	**20022**	Drain Port Plug
9.	**01SP-2S**	Probe Port Plug

Additional Parts (not shown)

10223	Installation Instructions

Metal Bowl Kit

Questions? Contact Technical Support:
800 344 3286 or 209 521 7860 ext. 7555
e-mail: racortech@parker.com

How to Order

(The example below illustrates how a part number is constructed).

320R-RAC	-01
Basic Model Number	**-01** (for clear bowl) **-02** (for metal bowl)

Mounting Information

Top View

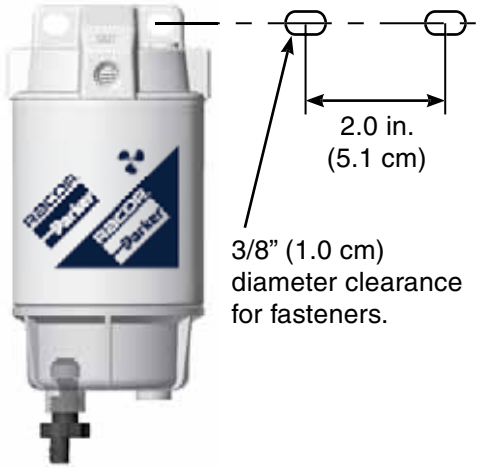

Test Data

(Test results are from controlled laboratory testing. Field results may vary.)

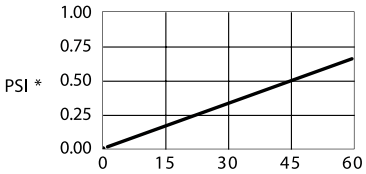

Flow (GPH)
SAE J905 Flow Restriction

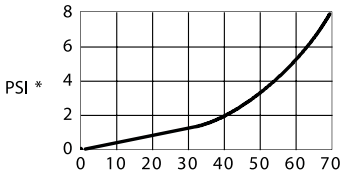

Grams
Racor Gasoline Solid Capacity Test
(using SOFTC-2A; 10 mic. Element)

PSI x 2.036 = inHg. (PSI x 6.895 = kPa)

Gasoline Spin-On Series

Replacement Parts

320R-RAC-01 and 320R-RAC-02

	Part Noumber	Description
1.	**RK 20180**	Mounting Head Kit
2.	**20707**	Gasket Kit
3.	Replacement Elements	
	S3227	10 Micron
	S3228TUL	10 Micron (UL Marine)
4.	**RK 22244**	Bowl O-ring Kit
5.	**RK 30475**	Clear Bowl Kit
6.	**RK 30476**	Self-venting Drain Kit
7.	**RK 30473-02**	Metal Bowl Kit
8.	**918-N6**	Steel Port Plug

Additional Parts (not shown)

22237	Installation Instructions

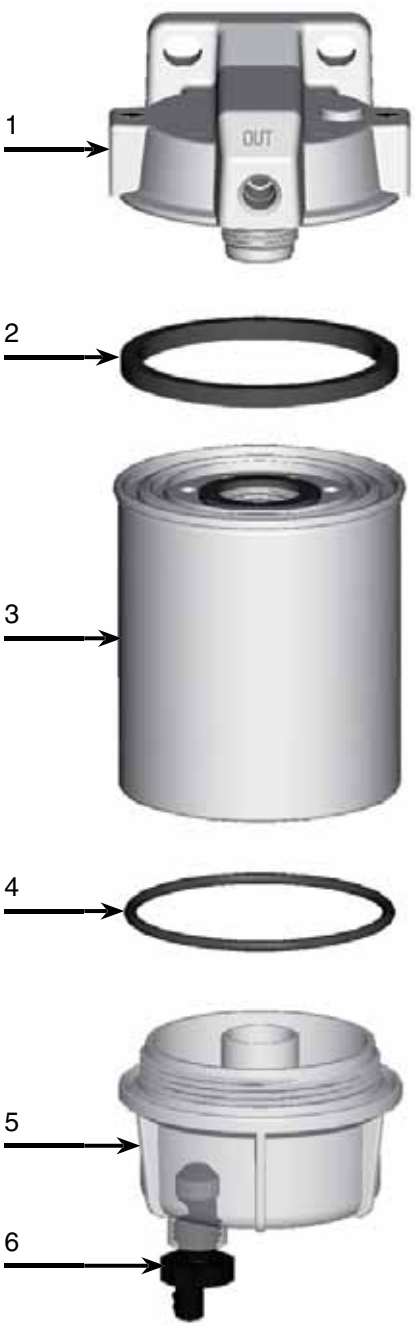

Metal Bowl Kit

Questions? Contact Technical Support:
800 344 3286 or 209 521 7860 ext. 7555
e-mail: racortech@parker.com

How to Order

(The example below illustrates how a part number is constructed).

490R-RAC	-01
Basic Model Number	**-01** (for clear bowl)

Mounting Information

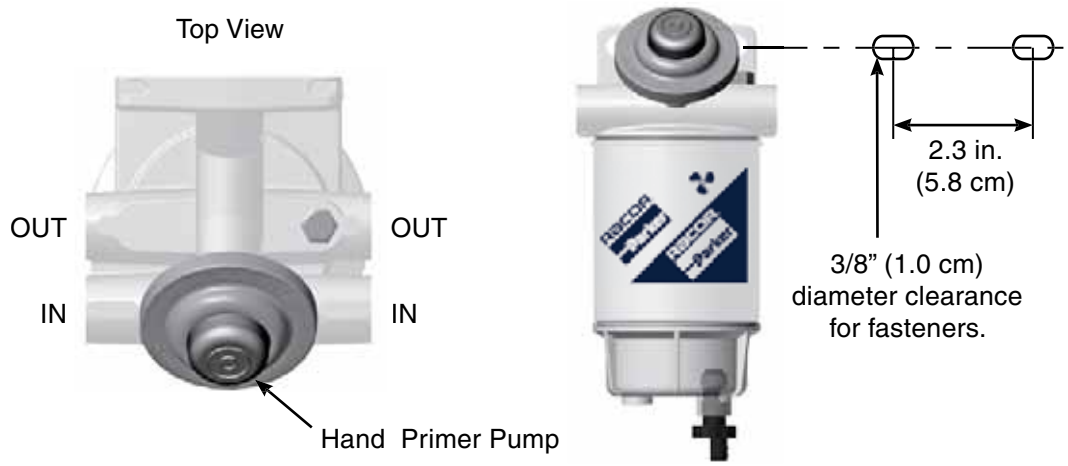

Test Data

(Test results are from controlled laboratory testing. Field results may vary.)

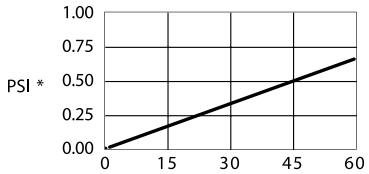

Flow (GPH)
SAE J905 Flow Restriction

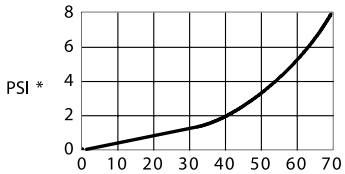

Grams
Racor Gasoline Solid Capacity Test
(using SOFTC-2A; 10 mic. Element)

PSI x 2.036 = inHg. (PSI x 6.895 = kPa)

Gasoline Spin-On Series

Replacement Parts

490R-RAC-01

	Part No.	Description
1.	**10110**	Vent Plug (3/8" SAE)
2.	**24000**	Mounting Head Kit (3/8"-18 NPTF ports) (includes #'s 1-3)
3.	**20505**	Gasket Kit
4.	Replacement Elements (includes #'s 3-5)	
	S3227	10 Micron
5.	**30076**	Bowl O-ring Kit
6.	**RK 30475**	Clear Bowl Kit (includes #'s 5-7)
7.	**RK 30476**	Self-venting Drain Kit

Additional Parts (not shown)

14345	Installation Instructions

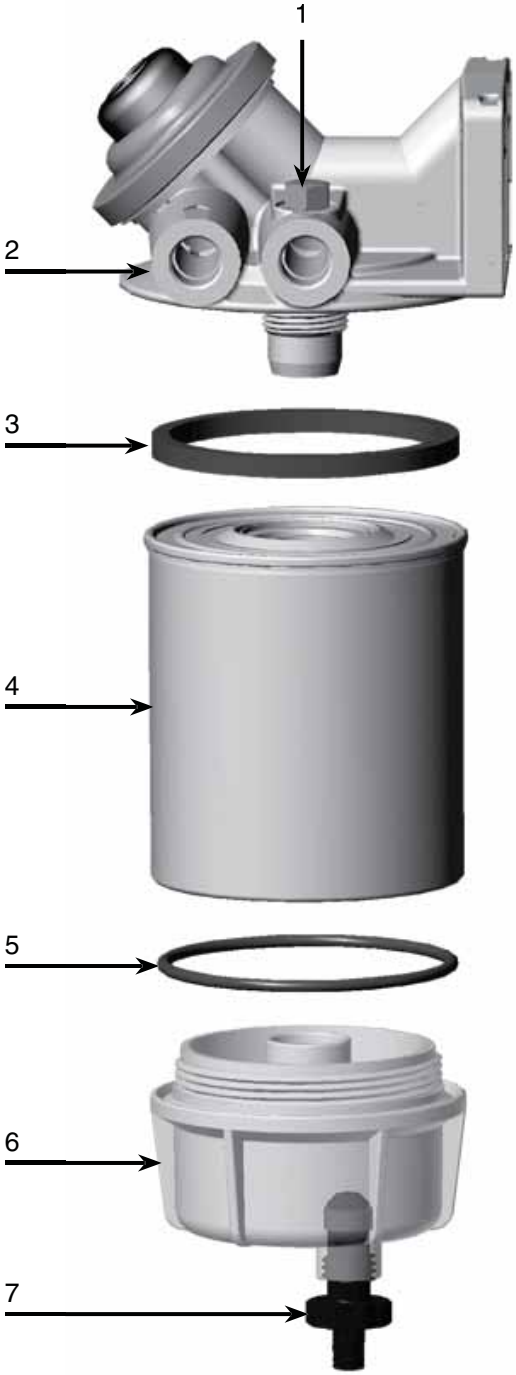

Questions? Contact Technical Support:
800 344 3286 or 209 521 7860 ext. 7555
e-mail: racortech@parker.com

How to Order

(The example below illustrates how a part number is constructed).

660R-RAC	-01
Basic Model Number	**-01** (For Clear Bowl) **-02** (For Metal Bowl)

Mounting Information

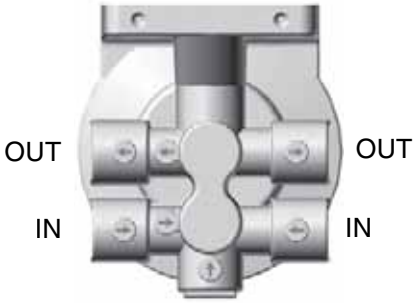

Top View

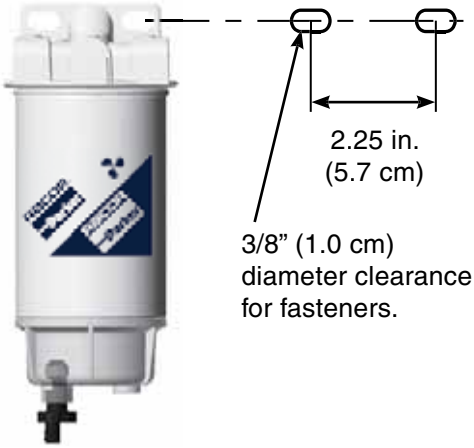

Test Data

(Test results are from controlled laboratory testing. Field results may vary.)

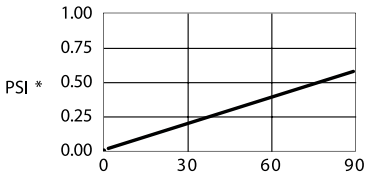

Flow (GPH)
SAE J905 Flow Restriction

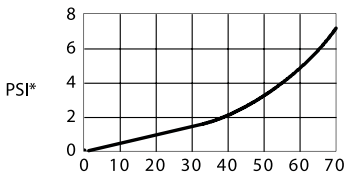

Grams
Racor Gasoline Solid Capacity Test
(using SOFTC-2A; 10 mic. Element)

PSI x 2.036 = inHg. (PSI x 6.895 = kPa)

Gasoline Spin-On Series

Replacement Parts

660R-RAC-01 and **660R-RAC-02**

	Part Number	Description
1.	**RK 21411**	Mounting Head Kit
2.	**20707**	Gasket Kit
3.	Replacement Elements	
	S3232	10 Micron
	S3232UL	10 Micron (02)
4.	**RK 22244**	Bowl O-ring Kit
5.	**RK 30475**	Clear Bowl Kit
	RK 30473-02	Metal Bowl Kit (02)
6.	**RK 30476**	Self-venting Drain Kit
	918-N6	Steel Port Plug (02)

Metal Bowl Kit

Questions? Contact Technical Support:
800 344 3286 or 209 521 7860 ext. 7555
e-mail: racortech@parker.com

How to Order

(The example below illustrates how a part number is constructed).

3120R-RAC	-32
Basic Model Number	120 GPH (454 LPH)

Mounting Information

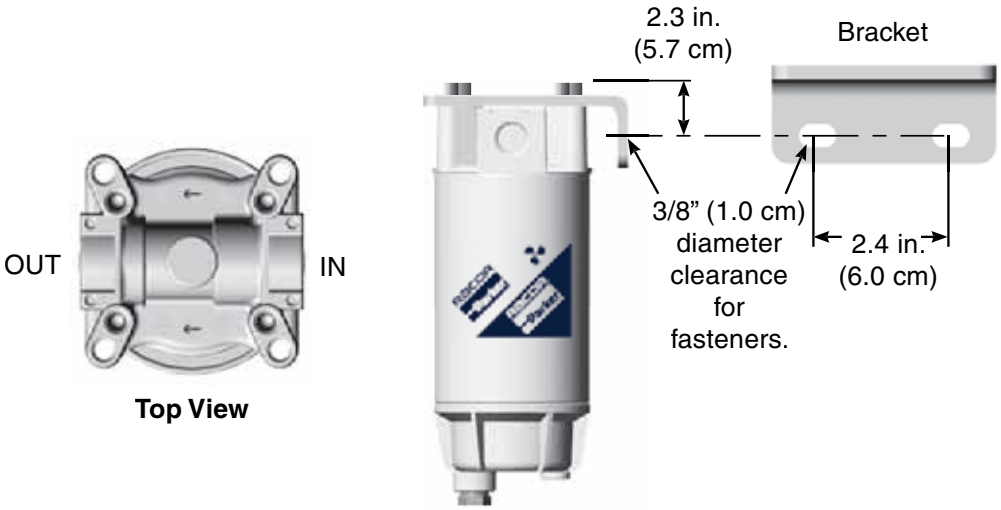

Test Data

(Test results are from controlled laboratory testing. Field results may vary.)

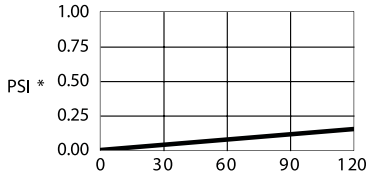

Flow (GPH)
SAE J905 Flow Restriction

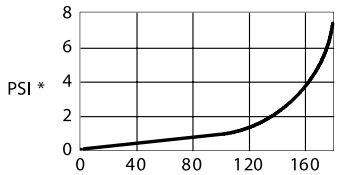

Grams
SAE J905 Solid Capacity
(using SOFTC-2A; 3232UL Element)

PSI x 2.036 = inHg. (PSI x 6.895 = kPa)

Gasoline Spin-On Series

Replacement Parts

3120R-RAC-32

	Part Number	Description
1.	**30288-01**	Mounting Bracket Kit (includes (4) 3/8”-16x1 fasteners)
2.	**30308-01**	Mounting Head Kit (includes #3)
3.	**30768**	Gasket Kit
4.	Replacement Element (includes #3 and 5) **S3232UL**	10 Micron
5.	**RK 30076**	Bowl O-ring Kit
6.	**RK 30473-02**	Metal Bowl Kit (includes #’s 5 and 7)
7.	**21430**	Steel Plug, 38” NPT

Additional Parts (not shown)
30941 Installation Instructions

MARINE UL LISTED

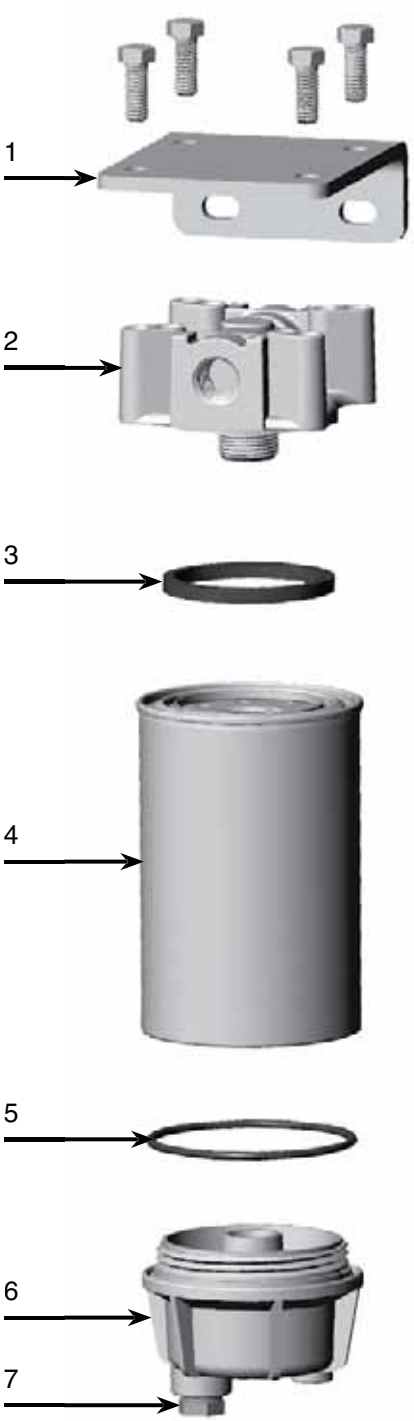

Questions? Contact Technical Support:
800 344 3286 or 209 521 7860 ext. 7555
e-mail: racortech@parker.com

120 RMAM

The 120RMAM fuel filter/water separator features 1/4”-18 NPTF inlet and outlet fuel ports and a unitized mounting bracket for mounting versatility. It also features an Aquabloc®II replacement element that repels water and removes solid contamination down to 2 micron. This rugged, compact filter assembly fits a variety of engine applications and comes with the peace-of-mind you’ve learned to expect from Racor filters. Experienced sailors trust their engines, their livelihood, and even their lives to Racor. Shouldn’t you?

An optional UL Recognized petcock drain valve is also available to aid in the removal of water and contaminants. See Marine Accessories section.

120RMAM

How to Order

(The example below illustrates how a part number is constructed.)

120RMAM	2
Basic Model	Specify a micron rating: **2** (for 2 micron) **30** (for 30 micron)

120 RMAM

Specifications	120RMAM
Maximum Flow Rate:	15 GPH (57 LPH)
Port Size (SAE J476)	¼”-18 NPTF
Number of Ports: **Inlets** **Outlets**	 2 2
Replacement Element: **2 Micron** **30 Micron**	 R12SUL R12PUL
Center Threads	M18 x 1.5
Height	5.7 in. (14.5 cm)
Width	3.2 in. (8.1 cm)
Depth	3.2 in. (8.1 cm)
Weight	1.4 lb (0.6 kg)
Clean Pressure Drop	0.15 PSI (1.08 kPa)
Maximum Operating Pressure	7 PSI (48 kPa)
Bowl Capacity	1.8 oz (52 ml)
H_2O Removal Efficiency	99%
Ambient Fuel Temperature	-40° to +250°F (-40° to +121°C)
Max. Fuel Temperature	190°F (32°C)

MARINE UL LISTED

Test Data

(Test results are from controlled laboratory testing. Field results may vary.)

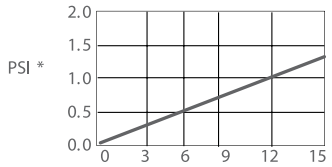

Flow (GPH)

SAE J905 Fuel Flow Restriction

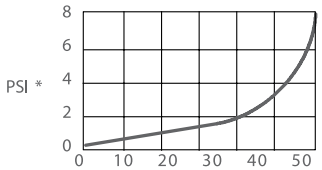

Grams

SAE J905 Solids Capacity
(using SOFTC-2A; R12T Element)

*PSI X 2.036 = inHg. / PSI X 6.895 = kPa

Questions? Contact Technical Support:
800 344 3286 or 209 521 7860 ext. 7555
e-mail: racortech@parker.com

Installation Diagram

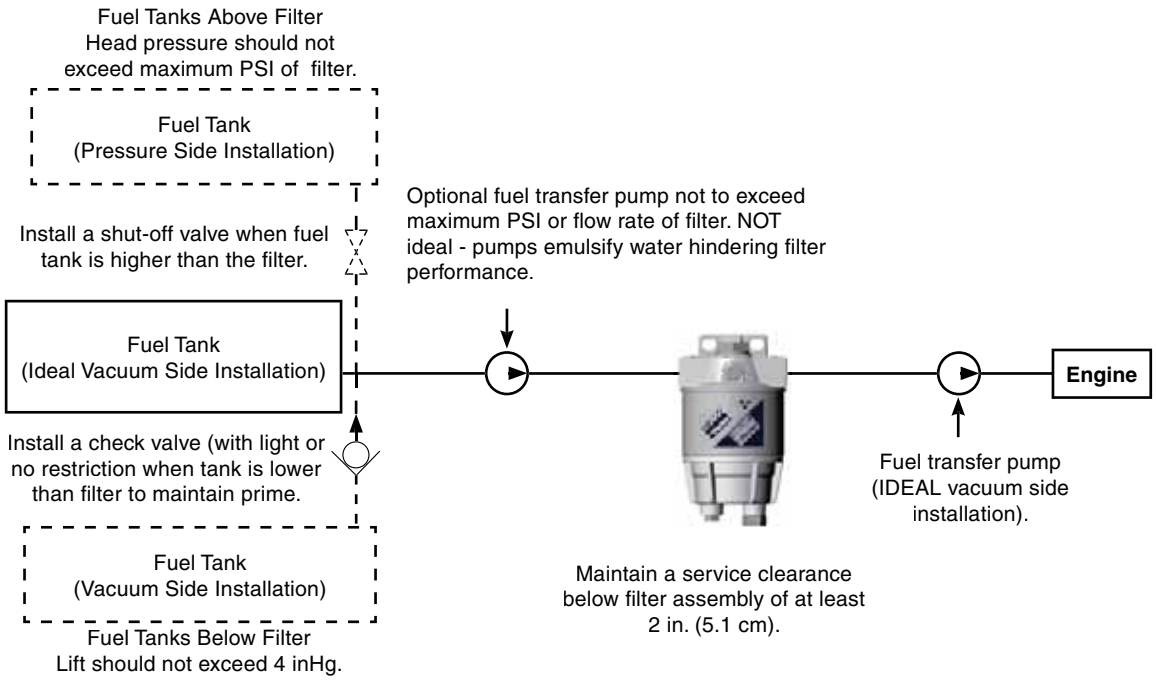

Racor offers hose and fittings to complete an installation. See Marine Accessories.

Mounting Information

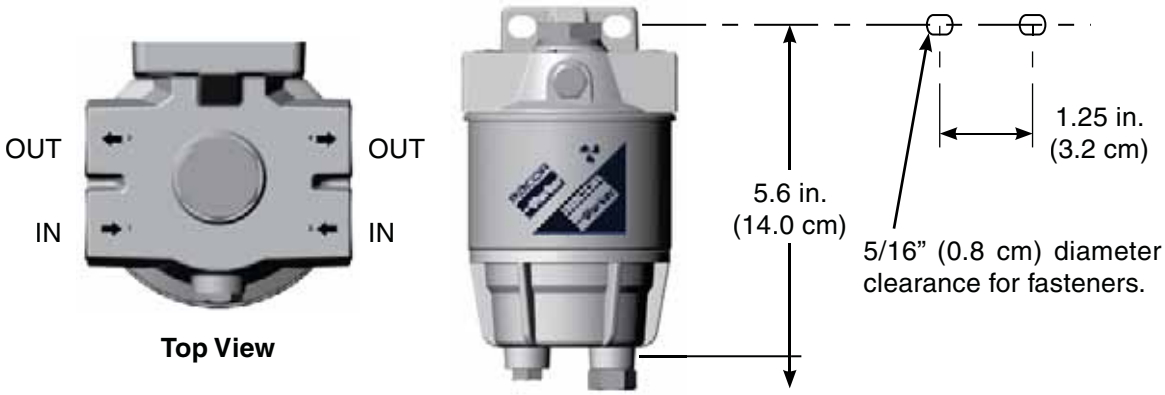

120 RMAM

Replacement Parts

120RMAM

	Part Number	Description
1.	**RK 10006**	Head Bolt Assembly Kit (includes washer and o-rings)
2.	**RK 10117**	Head Kit (1/4”-18 NPTF Ports) (includes #’s 3 and 4)
3.	**RK 10110**	Metal Vent Plug Kit (3/8”-24 UNF)
4.	**RK 10503**	Element Gasket Kit
5.	Replacement Element (includes #’s 4 and 6)	
	R12SUL	(2 Micron) UL Recognized
	R12PUL	(30 Micron) UL Recognized
6.	**RK 10012**	Bowl O-ring Kit
7.	**RK10226**	Metal Bowl Kit (includes #’s 6, 8 and 9)
8.	**RK 20022**	Metal Plug Kit (1/2”-20 UNF)
9.	**01SP-2S**	Steel Drain Plug (1/8” NPT)

Additional Parts (not shown)

RK 10063	Gasket and O-ring Kit
10210	Installation Instructions

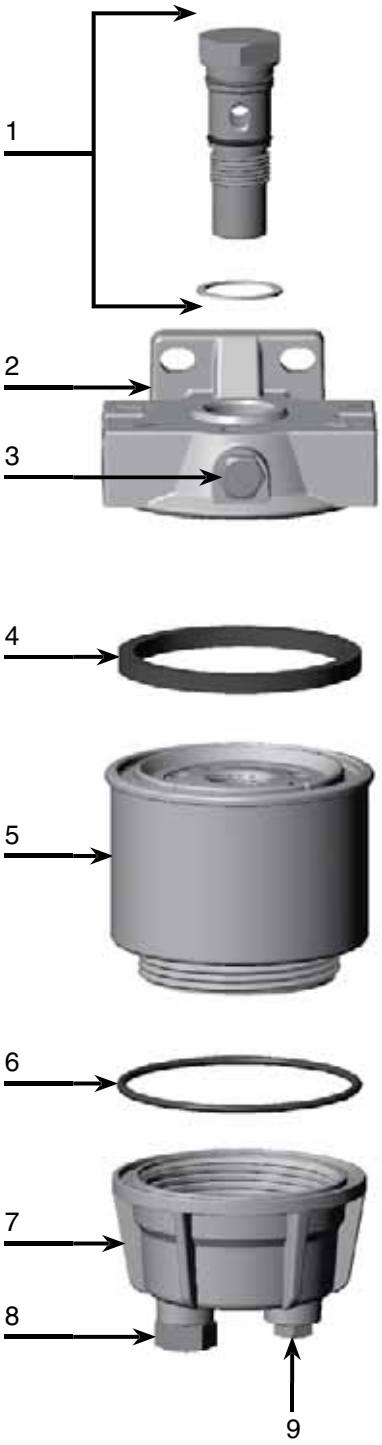

MARINE UL LISTED

Questions? Contact Technical Support:
800 344 3286 or 209 521 7860 ext. 7555
e-mail: racortech@parker.com

200 Series

Racor's Marine Spin-On 200 Series fuel filter/water separators are available in three sizes to fit any engine compartment. All three assemblies feature 1/4"-18 NPTF inlet and outlet fuel ports, a unitized mounting bracket for mounting versatility, an in-head primer pump for quick fuel system priming, a metal sediment and water collection bowl (safe for inboard use), a vent plug to easily evacuate trapped air, and a 10 micron Aquabloc II filter element which repels nearly 100% of all free water found in fuel.

If quality is what you want and filtration is what you need, than a Racor 200 Series fuel filter/water separator is the answer. Experienced sailors trust their engines, their livelihood and even their lives to Racor. Shouldn't you?

215RMAM

230RMAM

245RMAM

ASTM INTERNATIONAL

MARINE UL LISTED

MEMBER ABYC Setting Standards for Safer Boating®

NMMA™ TYPE ACCEPTED

200 Series

200 Series Overview

Specifications	215RMAM	230RMAM	245RMAM
Maximum Flow Rate	15 GPH (57 LPH)	30 GPH (114 LPH)	45 GPH (170 LPH)
Port Size	¼”-18 NPTF	¼”-18 NPTF	¼”-18 NPTF
Number of Ports:			
Inlets	1	1	1
Outlets	2	2	2
Replacement Element	R15TUL	R20TUL	R25TUL
Center Threads	1”-14	1”-14	1”-14
Height	8.3 in. (21.1 cm)	9.0 in. (22.9 cm)	10.5 in. (26.7 cm)
Width	4.0 in. (10.2 cm)	4.0 in. (10.2 cm)	4.0 in. (10.2 cm)
Depth	4.0 in. (10.2 cm)	4.0 in. (10.2 cm)	4.0 in. (10.2 cm)
Weight	1.8 lb (0.8 kg)	2.0 lb (0.9 kg)	2.2 lb (1.0 kg)
Clean Pressure Drop	0.12 PSI (0.83 kPa)	0.31 PSI (2.14 kPa)	0.61 PSI (4.21 kPa)
Maximum Operating Pressure	30 PSI (207 kPa)	30 PSI (207 kPa)	30 PSI (207 kPa)
Bowl Capacity	2.0 oz (58 ml)	2.0 oz (58 ml)	2.0 oz (58 ml)
Water Removal Efficiency	99%	99%	99%
Ambient Fuel Temperature	-40° to +250°F (-40° to +121°C)		
Max. Fuel Temperature	190°F (32°C)		

Test Data

(Test results are from controlled laboratory testing. Field results may vary.)

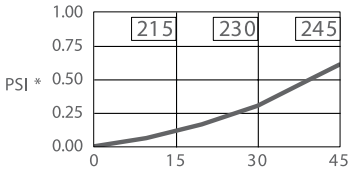

Flow (GPH)
SAE J905 Fuel Flow Restriction

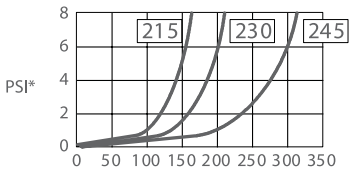

Grams
SAE J905 Solids Capacity
(using SOFTC-2A; 10 mic. Element)

*PSI X 2.036 = inHg. / PSI X 6.895 = kPa

Questions? Contact Technical Support:
800 344 3286 or 209 521 7860 ext. 7555
e-mail: racortech@parker.com

Installation Diagram

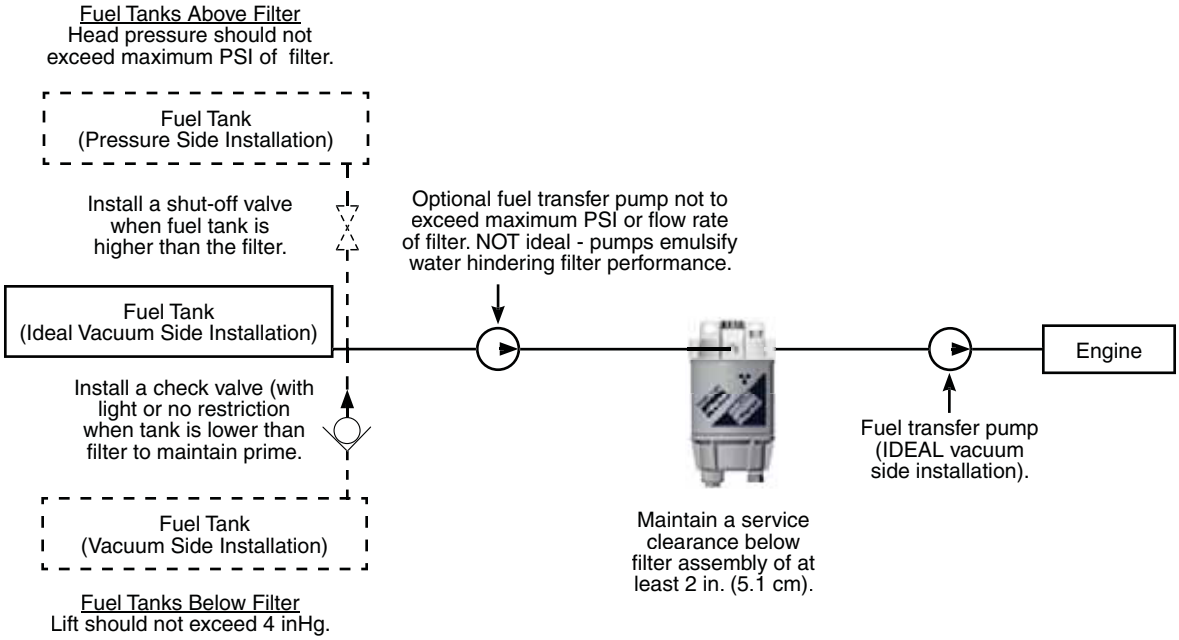

Installation diagram applies to all 200 Series filters. Model 215RMAM shown above. Racor offers hose and fittings to complete this installation. See Marine Accessories.

Mounting Information

200 Series

Replacement Parts

215RMAM, 230RMAM and 245RMAM

	Part No.	Description
1.	**RK20025-01**	Primer Pump Kit
2.	**RK20011-01**	Checkball Kit with Plastic Cap
	RK 20742	Metal Cap Kit
3.	**RK20046-01**	Head Kit (1/4" NPTF Ports) (includes #'s 1-4)
4.	**RK 22061**	Gasket Kit
5.	Replacement Elements (includes #'s 4 and 6)	
	R15TUL	10 Micron (UL Recognized)
	R20TUL	10 Micron (UL Recognized)
	R25TUL	10 Micron (UL Recognized)
6.	**RK 22244**	Bowl O-ring Kit
7.	**RK 22368**	Metal Bowl Kit (includes #'s 6, 8 and 9) (3/8" NPT drain Plug) (1/2"-20 probe port)
8.	**918-N6**	Steel Plug (3/8" NPT)
9.	**RK 20022**	Metal Plug Kit (1/2"-20 UNF)
10.	**RK 10110**	Metal Vent Plug Kit (3/8"-16 UNF)

Additional Parts (not shown)

RK20075-01	Complete Seal Service Kit
RK 12041	Port Plug Kit (1/4" NPT)
22360	Installation Instructions

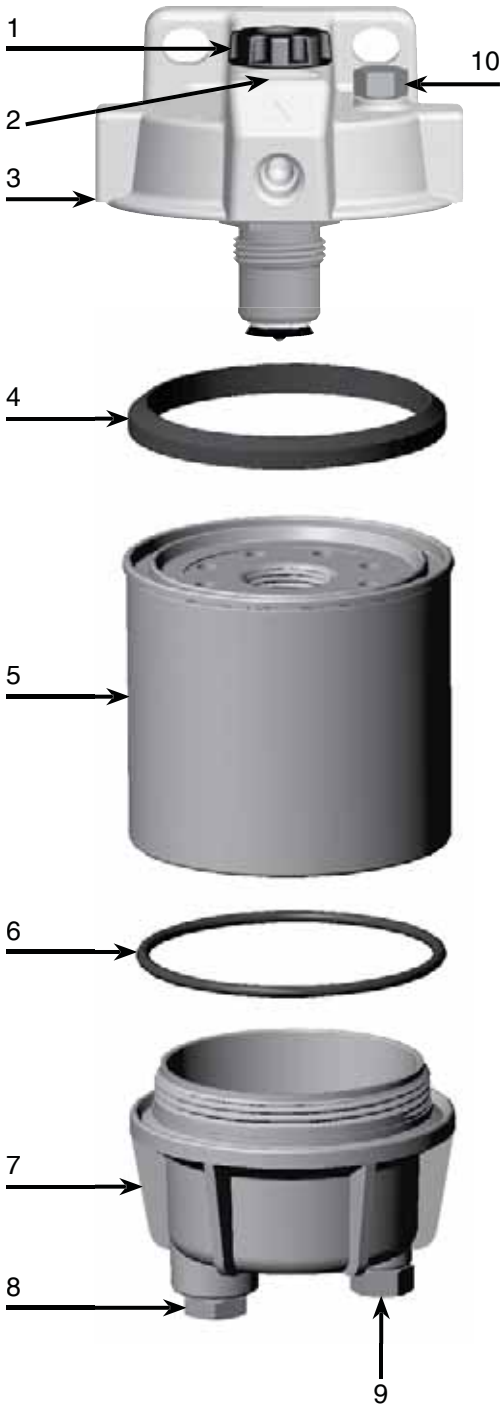

MARINE UL LISTED

Questions? Contact Technical Support:
800 344 3286 or 209 521 7860 ext. 7555
e-mail: racortech@parker.com

Hand Primer Pump Upgrade

Old Head Kit RK 20046
Old Primer Pump Kit# RK 20025

New Head Kit RK20046-01
New Primer Pump Kit# RK20025-01

Benefits

- **Up to 37% increase in volume of fuel pumped per stroke**
- **Improved strength and alignment**
- **Improved ease of operation**
- **Reduced restriction in fuel flow**
- **Changeable in the field**

This enhancement is possible by increasing the stroke length, by about 1/2″, on the pump shaft and the element threaded adapter. Additionally, the knob and support ring have been redesigned to be more robust.

This change also affects replacement kits for the primer pump and head assemblies. The new style primer pump requires an additional 0.5 inch of space above the assembly (2 inches total) to utilize the added length of stoke; however, the primer pump will perform as always without any mounting modifications.

The new easy-grasp pump knob is larger than current knobs and the color will be changed from white to black to make a clear visual change between current pumps and newer versions.

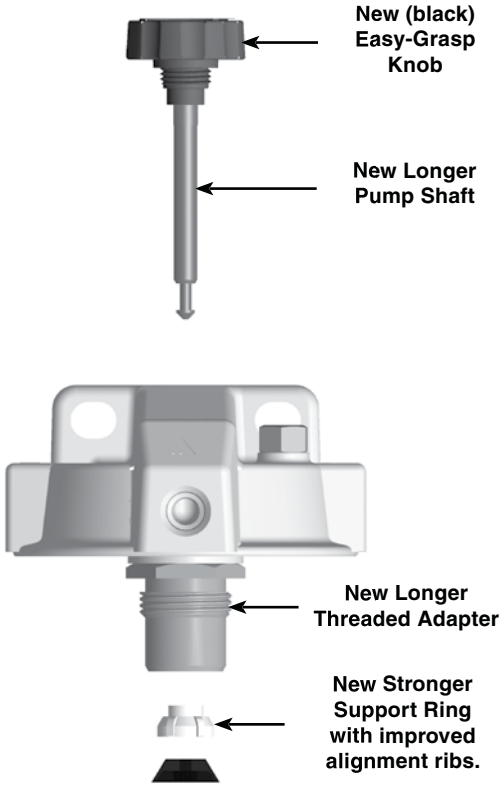

New Primer Pump Assembly Exploded View

400 Series

400 Series

Marine 400 Series Spin-On fuel filter/ water separators are available in 4 sizes to fit any engine compartment. 400 Series mounting heads feature 4 ports (2 inlets and 2 outlets), a unitized mounting bracket for mounting versatility and a built-in, hand operated fuel priming pump to simplify servicing and repriming procedures.

Also featured on these assemblies are Aquabloc®II water repelling elements that remove sediment down to 10 micron, a vent plug to remove trapped air and a metal water and sediment collection bowl. Experienced sailors trust their engines, their livelihood, and even their lives to Racor. Shouldn't you?

445MAM10

460MAM10

4120MAM10

490MAM10

ASTM INTERNATIONAL

MARINE UL LISTED

MEMBER ABYC Setting Standards for Safer Boating®

NMMA™ TYPE ACCEPTED

Questions? Contact Technical Support:
800 344 3286 or 209 521 7860 ext. 7555
e-mail: racortech@parker.com

400 Series Overview

Specifications	445MAM10	460MAM10	490MAM10	4120MAM10
Maximum Flow Rate	45 GPH (170 LPH)	60 GPH (227 LPH)	90 GPH (341 LPH)	120 GPH (454 LPH)
Port Size	3/8" NPTF	3/8" NPTF	3/8" NPTF	¾" UNF
Number of Ports:				
Inlet	2	2	2	2
Outlet	2	2	2	2
Replacement Element	S3204TUL	S3211TUL	S3201TUL	S3201TUL
Center Threads	1"-14	1"-14	1"-14	1"-14
Height	9.4 in. (23.9 cm)	10.8 in. (27.4 cm)	12.8 in. (32.5 cm)	12.8 in. (32.5 cm)
Width	4.5 in. (11.4 cm)	4.5 in. (11.4 cm)	4.5 in. (11.4 cm)	4.5 in. (11.4 cm)
Depth	4.8 in. (12.2 cm)	4.8 in. (12.2 cm)	4.8 in. (12.2 cm)	4.8 in. (12.2 cm)
Weight	2.9 lb (1.3 kg)	3.1 lb (1.4 kg)	3.3 lb (1.5 kg)	3.3 lb (1.5 kg)
Clean Pressure Drop	0.2 PSI (1.2 kPa)	0.3 PSI (2.1 kPa)	0.4 PSI(2.4 kPa)	0.5 PSI (3.1 kPa)
Max. Operating Pressure	15 PSI (103 kPa)	15 PSI (103 kPa)	15 PSI (103 kPa)	15 PSI (103 kPa)
H_2O Removal Efficiency	99%	99%	99%	99%
Bowl Capacity	2.0 oz (58 ml)	2.0 oz (58 ml)	2.0 oz (58 ml)	2.0 oz (58 ml)
Ambient Fuel Temperature	-40° to +250°F (-40° to +121°C)			
Max. Fuel Temperature	190°F (32°C)			

Test Data

(Test results are from controlled laboratory testing. Field results may vary.)

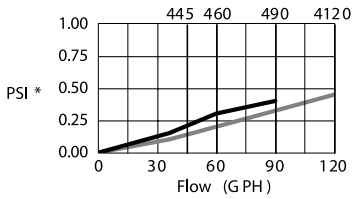

SAE J905 Fuel Flow Restriction

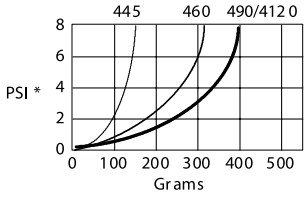

SAE J905 Solids Capacity
(using SOFTC-2A; 10 mic. element)

*PSI x 2.036 = inHg. / PSI x 6.895 = kPa

400 Series

Installation Diagram

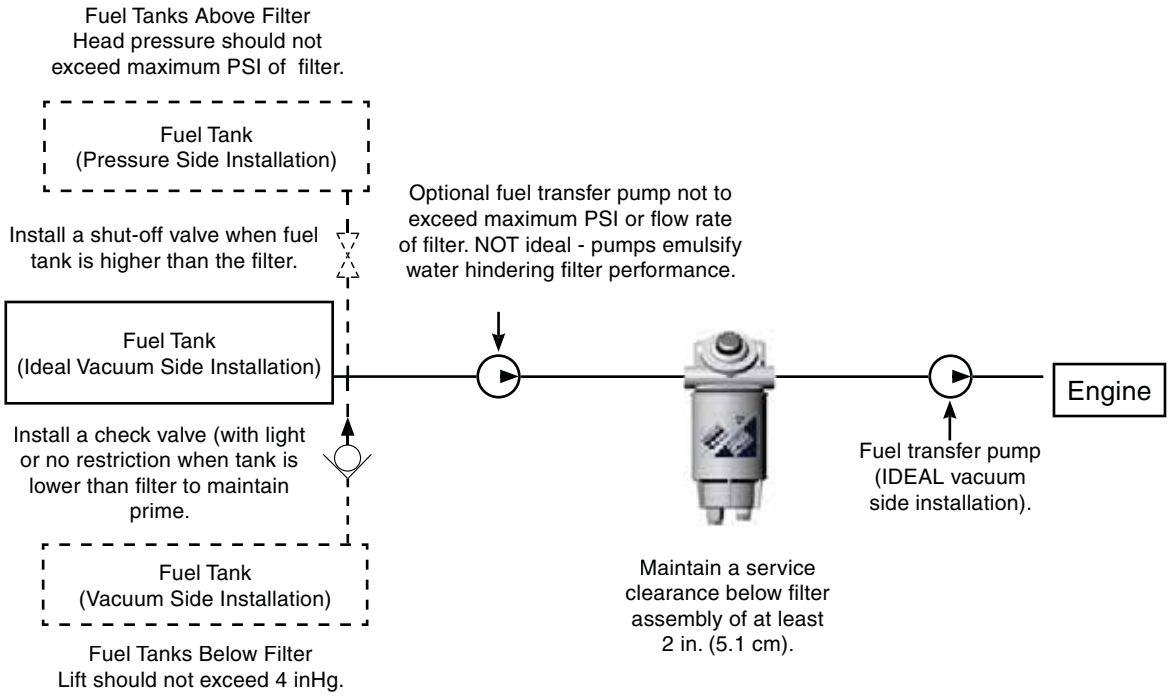

Installation diagram applies to all 400 Series filters. Model 445MAM10 shown above. Racor offers hose and fittings to complete this installation. See Marine Accessories.

Mounting Information

Top View

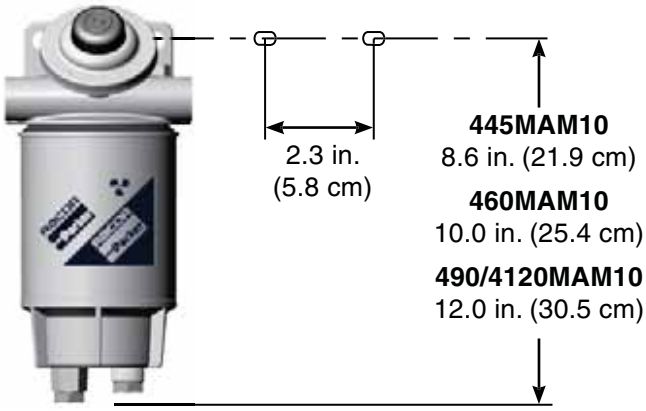

Replacement Parts

445MAM10, 460MAM10, 490MAM10 and 4120MAM10

	Part Number	Description
1.	**RK 10110**	Metal Vent Plug Kit
2.	Mounting Head Kits (includes primer pump & #'s 1 & 3)	
	RK 22425	with (3/8" NPTF ports) for 445MAM10, 460MAM10, 490MAM10
	RK 22270	4120MAM (¾" UNF ports)
3.	**RK 22061**	Element Gasket Kit
4.	Replacement Elements 10 micron (includes #'s 3 and 5)	
	S3204TUL	For 445MAM10
	S3211TUL	For 460MAM10
	S3201TUL	For 490MAM10
	S3201TUL	For 4120MAM10
5.	**RK 30076**	Bowl O-ring Kit
6.	**RK 30495**	Metal Bowl Kit (includes #'s 5-8)
7.	**918-N4**	Steel Plug (1/4" NPT)
8.	**RK 20022**	Metal Plug Kit (1/2"-20 UNF)

Additional Parts (not shown)

01SP-6S	Metal Plug (3/8" NPT)

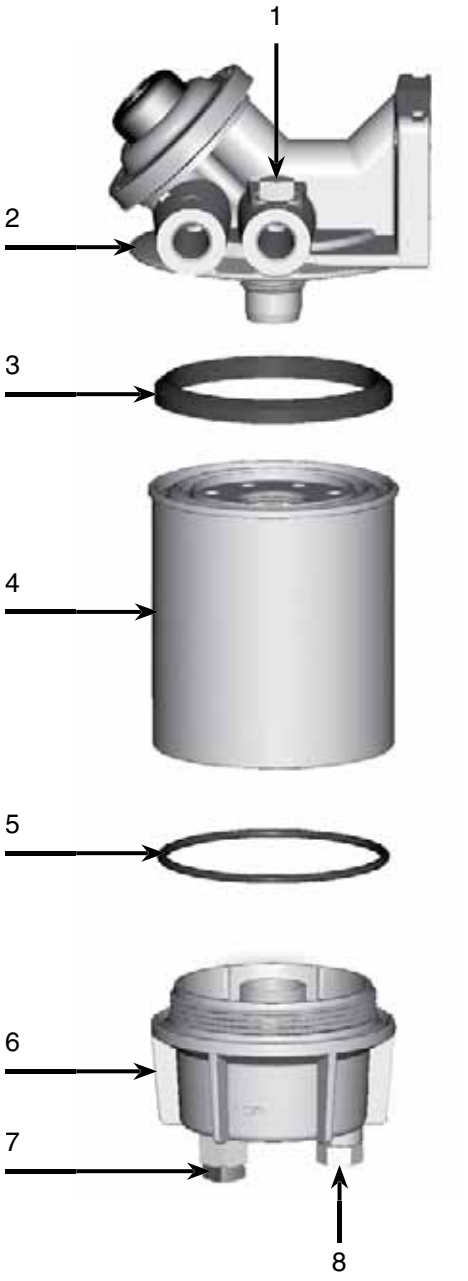

Applies to all models.

MARINE UL LISTED

Marine 800 Series

Marine 800 Series

Racor Marine 800 Series recyclers offer large diesel engine operators both ease of maintenance and continuous engine operation. Continuous operations include filter change-outs and the draining of accumulated water from the handy drain valve. Manifold systems have sufficient fuel flow for prime or standby power operations, commercial marine engines, or other large engine applications.

This recycling series includes the 812MA, the dual manifolded 75812MA and the triple manifolded 79812MA. The Marine 800 Series is designed to filter water and solid contaminants from diesel fuel.

These assemblies utilize proven Racor technology with Aquabloc®II filtration, which filters down to 40 micron, to purify diesel fuel before OEM engine filters are used. Protecting high tolerance injection components keeps engines running at peak performance and lowers maintenance costs. Large inlet and outlet ports allow for improved flow and less fuel flow restriction.

Features and options may include clear contaminant collection bowls; but not marine units, water sight glasses, manual drains and vacuum or compound gauges the marine units are powder coated white.

Determine the fuel flow rate

Selection should be made by considering the primary use for the unit. Recycling/filtering the fuel in storage tanks cleans the fuel while removing particulates and sediment accumulations. The fuel may be recycled numerous times, depending on the severity of contamination. Filter/recycling clock times can be reduced by selecting a larger capacity unit. Severely contaminated tanks may require more than one "cycle" to clean them properly.

For example, the 812MA filters up to 720 gallons per hour or 12 gallons per minute. It would take about 8.5 minutes to filter 100 gallons. To cycle the tank 3 times would take about 26 minutes. One cycle of 100 gallons of fuel with a 75812MA would take approximately 4 minutes.

812MA

75812MA

79812MA

Marine 800 Series Overview

Specifications	812MA	75812MA	79812MA
Maximum Flow Rate ***(one unit online)*** ***(two units online)*** ***(three units online)***	720 GPH (2725 LPH) N/A N/A	720 GPH (2725 LPH) 1440 GPH (5450 LPH) N/A	720 GPH (2725 LPH) 1440 GPH (5450 LPH) 2160 GPH (8175 LPH)
Port Size	1” NPT	1” NPT	1” NPT
Replacement Elements	RK22610	RK22610[1]	RK22610[1]
Micron Rating nominal): ***(upper element)*** ***(lower element)***	40 Coalescer	40 Coalescer	40 Coalescer
Height	33.2 in. (84.3 cm)	33.2 in. (84.3 cm)	33.2 in. (84.3 cm)
Width	6.6 in. (16.8 cm)	21.8 in. (55.4 cm)	33.3 in. (84.6 cm)
Depth	8.8 in. (22.4 cm)	16.0 in. (40.6 cm)	16.0 in. (40.6 cm)
Weight (dry)	36.0 lb (16.3 kg)	89.0 lb (40.4 kg)	133.0 lb (60.4 kg)
Min. Service Clearance: ***(above assembly)*** ***(below assembly)***	12.0 in. (30.5 cm) 4.0 in. (10.2 cm)	12.0 in. (30.5 cm) 4.0 in. (10.2 cm)	12.0 in. (30.5 cm) 4.0 in. (10.2 cm)
Max. Working Pressure	30 PSI (2.07 bar)	30 PSI (2.07 bar)	30 PSI (2.07 bar)
Differential Pressure	3.2 PSI (0.22 bar)	3.3 PSI (0.23 bar)	6.0 PSI (0.41 bar)
H_2O Removal Efficiency	99%	99%	99%
Operating Temperature	-10° to +180°F (-23° to +80°C)		

[1] **75812MA** assemblies require two **RK22610** element kits and the **79812MA** requires three.

Marine 800 Series

Installation Instructions

Before installing the filter assembly:

- Obtain good ventilation and lighting.
- Maintain a safe working environment.
- The engine must be off for installation.
- DO NOT smoke or allow open flames near the installation.

When positioning the filter assembly:

- Filter assemblies should be installed on vacuum side of fuel transfer pump for optimum water separating efficiency. See Installation Diagram.
- Keep fuel line restrictions to a minimum. Locate filter assembly between horizontal planes of bottom of fuel tank and inlet of fuel pump, if possible. If filter assembly is installed in an application where fuel tank is higher than filter, a shut-off valve must be installed between tank and filter assembly INLET. This will be used when servicing replacement elements.

Installing the filter assembly:

- Install the unit in a location which provides accessibility and protection from heat, flames, oraccidental impacts. Always adhere to applicable local piping regulations or codes. Use the maximum line size possible and avoid reducers and elbows in order to keep restriction values as low as possible.
- Apply thread sealant (do not use thread tapes) to inlet and outlet fittings prior to installing onto filter assembly.
- When routing hose, avoid surfaces that move, have sharp edges, or get hot (such as exhaust piping).

Mounting Information

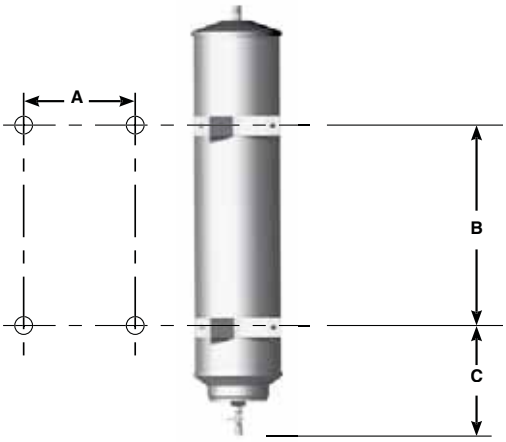

A:	B:	C:
812MA: 5.5 in. (13.8 cm)	812MA: 15.5 in. (39.2 cm)	812MA: 8.3 in. (21.0 cm)
75812MA: 20.3 in. (51.4 cm)	75812MA: 15.5 in. (39.2 cm)	75812MA: 8.6 in. (21.8 cm)
79812MA: 31.8 in. (80.8 cm)	79812MA: 16.0 in. (40.6 cm)	79812MA: 8.1 in. (20.6 cm)

Questions? Contact Technical Support:
800 344 3286 or 209 521 7860 ext. 7555
e-mail: racortech@parker.com

Priming Instructions

1. **Close inlet fuel valve, if applicable.**
2. **Remove T-handle(s) and lid(s) from top of filter assembly.**
3. **Fill filter assembly with clean fuel.**
4. **Lubricate lid gasket(s) and T-handle O-ring(s) with clean fuel or motor oil.**
5. **Replace lid(s) and T-handle(s) and tighten snugly by hand only - do not use tools.**
6. **Open inlet fuel valve, if applicable.**
7. **Start engine and check for leaks. Correct as necessary with engine off.**

Draining Water

Drain water and contaminants by opening the self-venting drain. If more than 1.4 oz (40 ml) of fluid is drained, follow priming instructions above. Otherwise, start engine and allow air to purge from system prior to operating equipment at normal loads.

Element Replacement

Frequency of element replacement is determined by the contamination level in fuel. Recommended service intervals are as follows: every 10,000 miles, 500 hours, every other oil change, annually, or at the first indication of power loss, whichever comes first.

Foul smelling fuel is an indication of microbiological contamination. A change of fuel source and Racor fuel additives are recommended. Always carry extra replacement elements as one tankful of excessively dirty fuel can plug a filter quickly.

1. **Close inlet fuel valve, if applicable, and completely drain filter assembly.**
2. **Remove T-handle(s), lid(s) and lid gasket(s).**
3. **Remove elements from inside housing(s) and dispose properly.**
4. **Lubricate new element(s) seals with clean fuel or motor oil and insert coalescer element(s) first, then the 40 micron paper element(s).**

Insert new elements SLOWLY with a slight twisting motion. Inserting them too quickly may dislodge element seals.

5. **Install new lid gasket(s), supplied with new elements, into lid groove.**
6. **Follow priming instructions above.**

Recycling Filtering

Recycling or filtering fuel in storage tanks cleans the fuel while removing particulates and sediment accumulations. Fuel should be recycled numerous times, depending on the severity of contamination. Filter/recycling clock times can be reduced by selecting a larger capacity unit.

Severely contaminated fuel may require several cleaning cycles to clean the fuel properly. Cycle time (the amount of time it takes to clean an entire tank of fuel one time) can be reduced by installing a duplex (75812MA) or triplex (79812MA) recycling system. For example, the 812MA recycler filters up to 720 gallons per hour (GPH) or 12 gallons per minute. The cycle time for a 100 gallon tank of fuel would be about 8.3 minutes. Depending of the contamination level of the fuel, one cycle may be enough to clean the fuel properly. If the fuel requires additional cleaning (more cycles), cleaning the fuel can become time consuming, especially if your filtering tanks larger than 100 gallons. By installing a 75812MA (maximum flow rate is 1440 GPH), the same 100 gallons of fuel can be clean in a little over 4 minutes (one cycle); a 79812MA would cut the cycle time down to around 3 minutes. If time is the issue, installing a duplex or triplex recycling system is the answer.

Marine 800 Series

Installation Diagram for 812MA

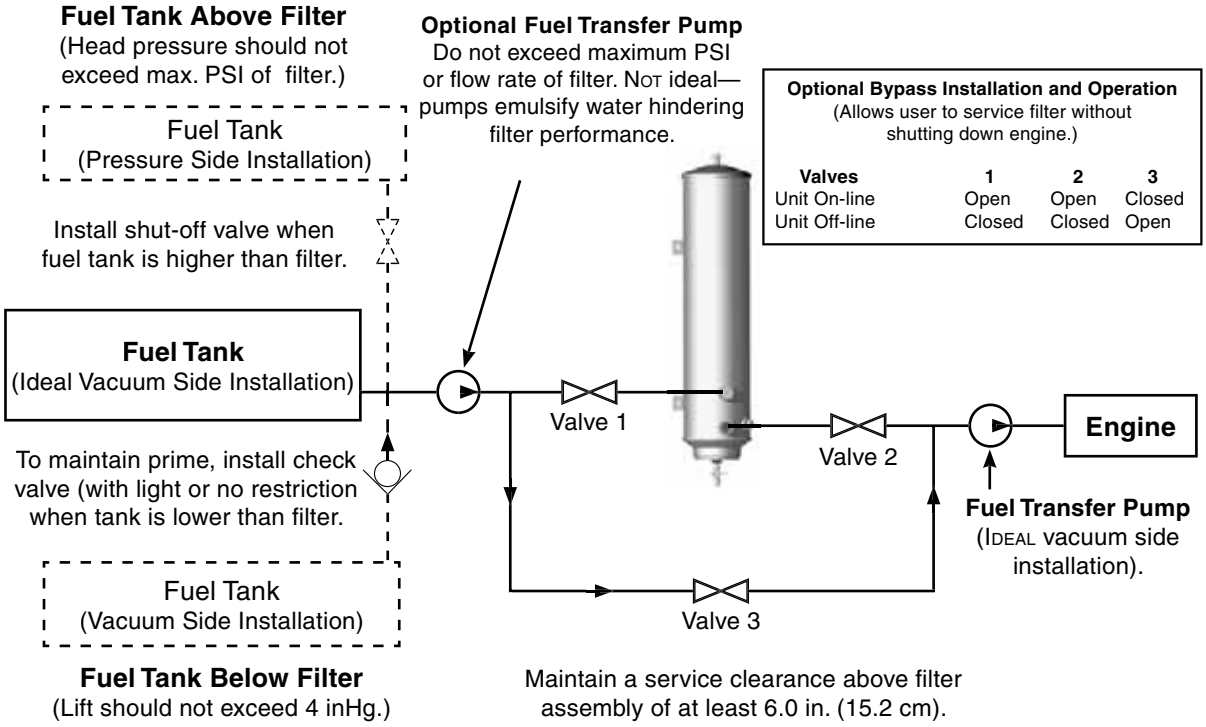

Optional Bypass Installation and Operation
(Allows user to service filter without shutting down engine.)

Valves	1	2	3
Unit On-line	Open	Open	Closed
Unit Off-line	Closed	Closed	Open

Questions? Contact Technical Support:
800 344 3286 or 209 521 7860 ext. 7555
e-mail: racortech@parker.com

Installation Diagram for 75812MA and 79812MA

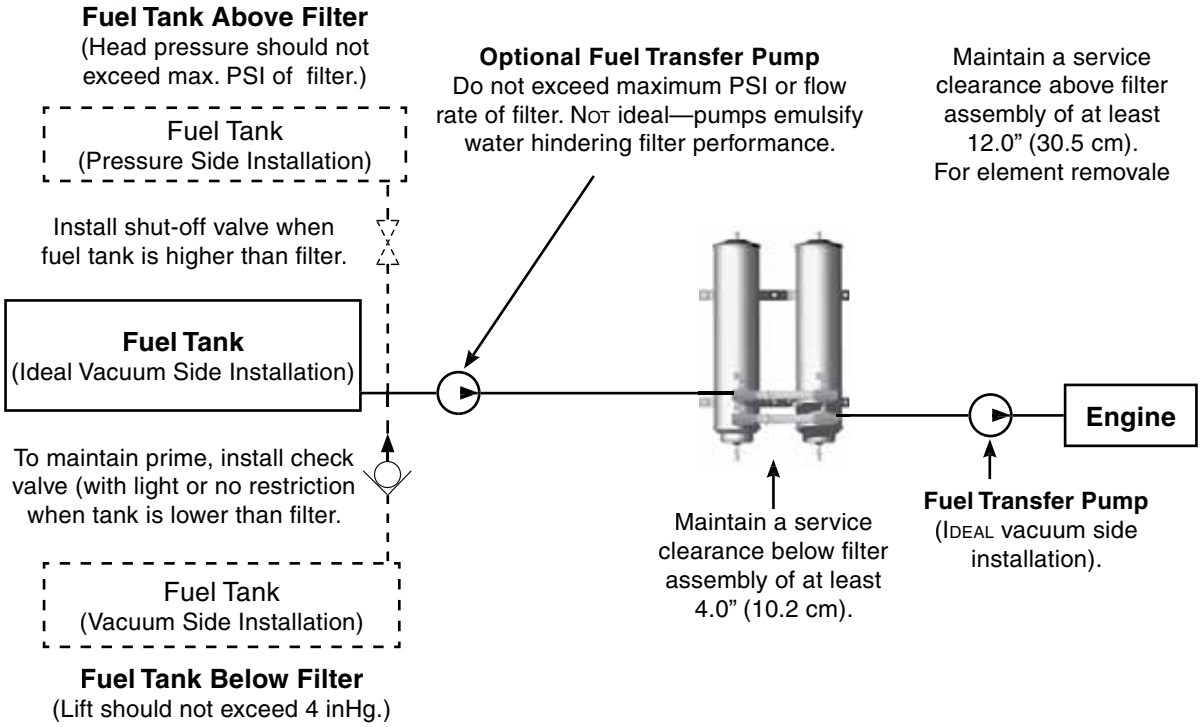

Marine 800 Series

Replacement Parts

812MA

	Part Number	Description
1.	**N/A**	T-handle Kit
	11350	T-handle O-ring
2.	**RK 22682**	Lid Kit
3.	**RK 22609**	Lid Seal Kit
4.	**RK 22610**	812MA Element Kit (these kits include one 40 micron element, one coalescer element and #3)
5.	**22675-B**	Metal Collection Cap
6.	**RK 19492**	Valve Kit

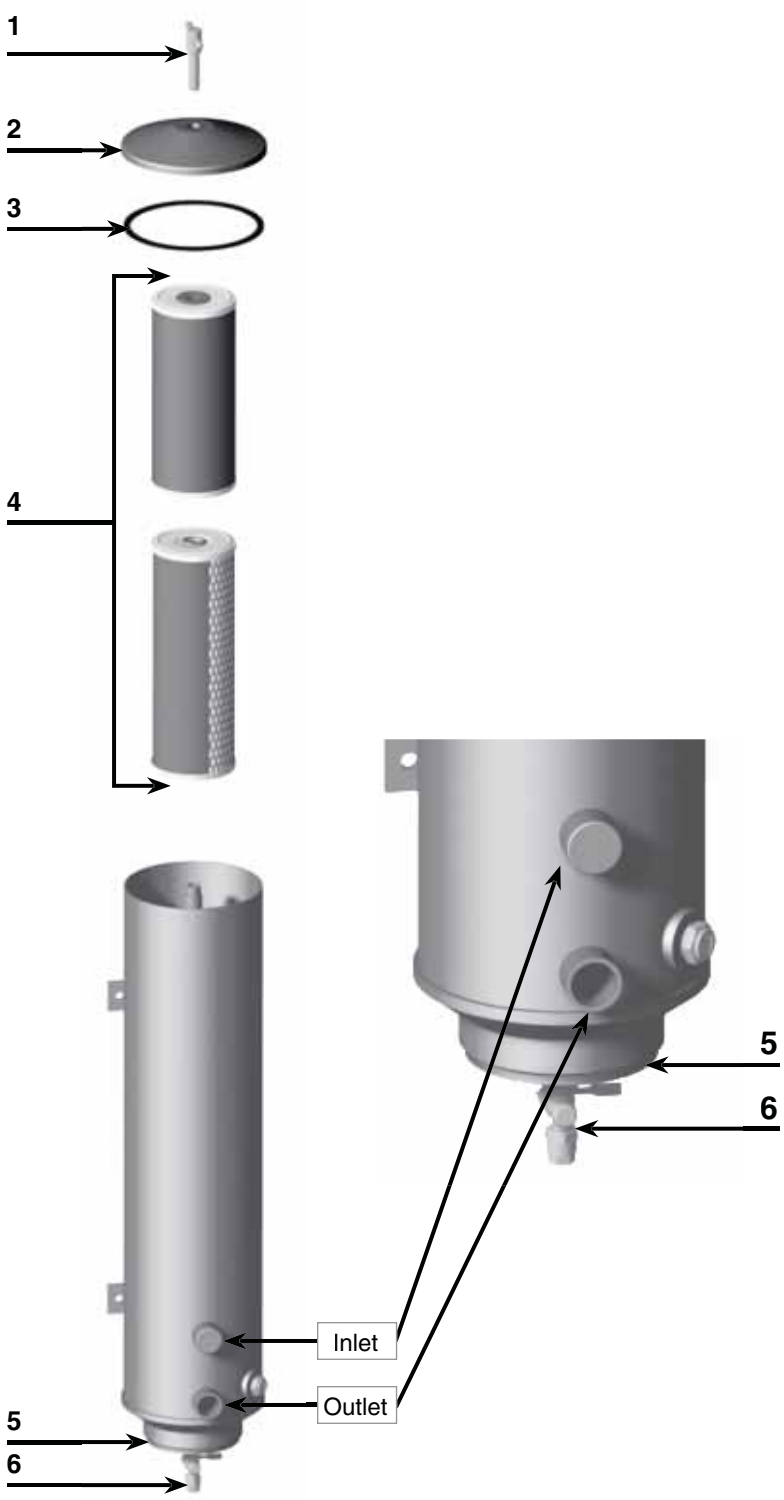

Replacement Parts

75812MA and 79812MA

	Part Number	Description
1.	**812MA**	(See 812MA Replacement Part List)
2.	N/A	Mounting Bracket (call Racor)
3.	**RK22898**	Ball Valve Kit (includes one 1” NPTF ball valve and one 1” NPTF straight pipe adapter)
4.	**RK22897**	Hose and Fitting Kit (includes one 1” NPTF straight pipe adapter, one hose assembly and one 1” NPTF pipe tee)

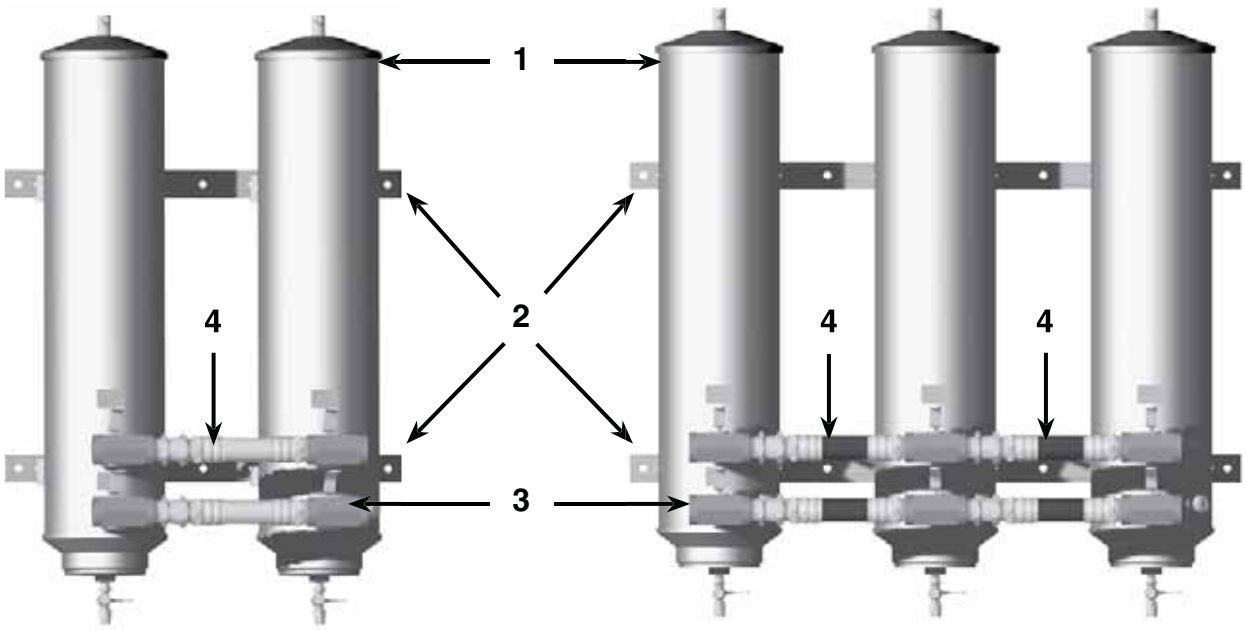

75812MA **79812MA**

Marine 800 Series

812MA Test Data

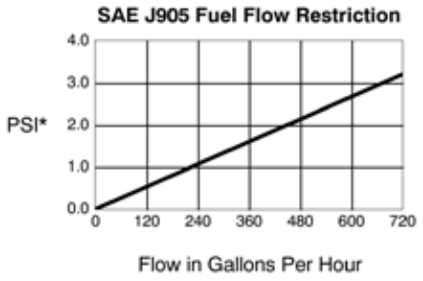

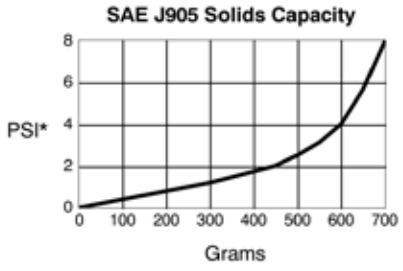

75812MA Test Data

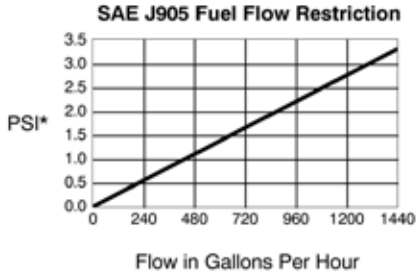

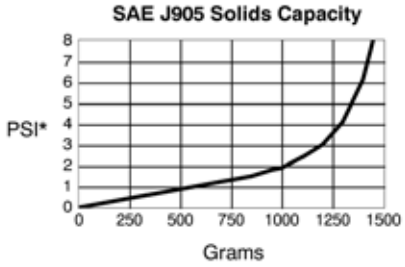

79812MA Test Data

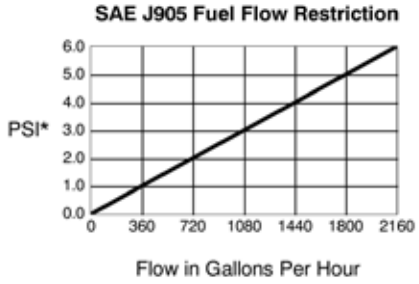

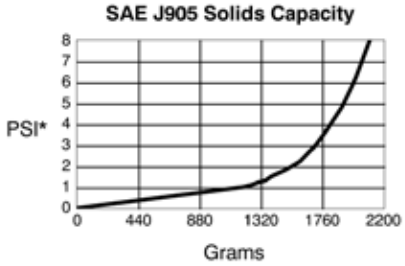

PSI X 2.036 = inHg (PSI X 6.895 = kPa)

Test results are from controlled laboratory testing. Field results may vary by application.

Questions? Contact Technical Support:
800 344 3286 or 209 521 7860 ext. 7555
e-mail: racortech@parker.com

Marine FBO

The Racor Marine FBO assembly is specifically designed to meet the filtration requirements of today's high pressure common rail diesel injection systems. The unit is used for fuel dispensing pumps or as a primary fuel filter/water separator on large diesel engine applications.

Racor's new FBO-10-MA and FBO-14-MA filter assemblies were designed to meet the toughest conditions and offer ease of filter changeouts. The FBO assembly can flow from 10 GPM (38 LPM) to 75 GPM (284 LPM), depending on which model, the element, and the type of fuel to be filtered.

The assembly features a "locking ring collar", which attaches the filter housing to the aluminum die cast filter head with four bolts. The slotted "locking ring collar" allows maintenance personnel to hand loosen the four collar bolts, rotate, and lower the bowl assembly for element changeouts. With a new element installed, simply raise the bowl and rotate into position on the locking ring and hand tighten evenly (evenly torquing the 4 closure bolts to 100 lb-in is highly recommended).

The closure hardware consists of stainless steel nuts, bolts, and washers with metal hand knobs for ease of maintenance. No wrenches or other special tools are required, allowing one person to easily change the filter element (no V-band clamps are used).

Features:

- **Standard Differential Pressure Gauge**
- **Optional Water Sight Glass with Bowl**
- **Standard Mounting Bracket**
- **Viton seals and O-Rings**
- **Optional Water Sensor Available**

MARINE UL LISTED

FBOMA-10

FBOMA-14

Marine FBO

Specifications	Maximum Flow Rates			Clean	Change
FBO-10-MA	**Diesel**	**Gasoline**	**Kerosene**	**Delta P**	**Delta P**
Microfilter	18 GPM (38 LPM)	52.5 GPM (199 LPM)	35 GPM (132 PM)	< 2 PSID	15 PSID
Filter Separator	10 GPM (38 LPM)	31.5 GPM (119 LPM)	21 GPM (79 LPM)	< 2 PSID	15 PSID
Absorber	10 GPM (38 LPM)	31.5 GPM (119 LPM)	21 GPM (79 LPM)	< 2 PSID	15 PSID
FBO-14-MA	**Diesel**	**Gasoline**	**Kerosene**	**Delta P**	**Delta P**
Microfilter	25 GPM (95 LPM)	75 GPM (284 LPM)	50 GPM (189 PM)	< 2 PSID	15 PSID
Filter Separator	15 GPM (57 LPM)	45 GPM (170 LPM)	30 GPM (114 PM)	< 2 PSID	15 PSID
Absorber	15 GPM (57 LPM)	45 GPM (170 LPM)	30 GPM (114 PM)	< 2 PSID	15 PSID

Element Chart	Micron Rating	FBO-10-MA (6 X 10 Element)	FBO-14-MA (6 X 14 Element)
Filter Separator	1	FBO 60327	FBO 60336
	5	FBO 60328	FBO 60337
	10	FBO 60353	FBO 60356
	25	FBO 60329	FBO 60338
Microfilter	1	FBO 60330	FBO 60339
	5	FBO 60331	FBO 60340
	10	FBO 60356	FBO 60357
	25	FBO 60332	FBO 60341
Absorptive Filter	1	FBO 60333	FBO 60342
	5	FBO 60334	FBO 60343
	10	FBO 60355	FBO 60358
	25	FBO 60335	FBO 60344

Questions? Contact Technical Support:
800 344 3286 or 209 521 7860 ext. 7555
e-mail: racortech@parker.com

How to Order

FBO - 10 - MA

- **FBO**: Fixed Based Operation
- **10**: Flow Rates
  - 10 = 5-40 GPM (22-181 LPM)
  - 14 = 10-60 GPM (45-272 LPM)
- **MA**:
  - None =
  - DP = Deferential Gauge
  - DPL = Delta P Gauge with Liquid Sight Glass
  - MA = Marine Unit Assembly
  - 25M = Unit with 25 Micron Element

FBO	-10	-14	-MA
Basic Unit 1.5” NPT Inlet & Outlet Ports	add -10 For a 6x10 in. element and flow rate of 10-52 GPM	add -14 for a 6x14 in. element and flow rate of 15-75 GPM	add -MA for marine Assembly

Installation Diagram

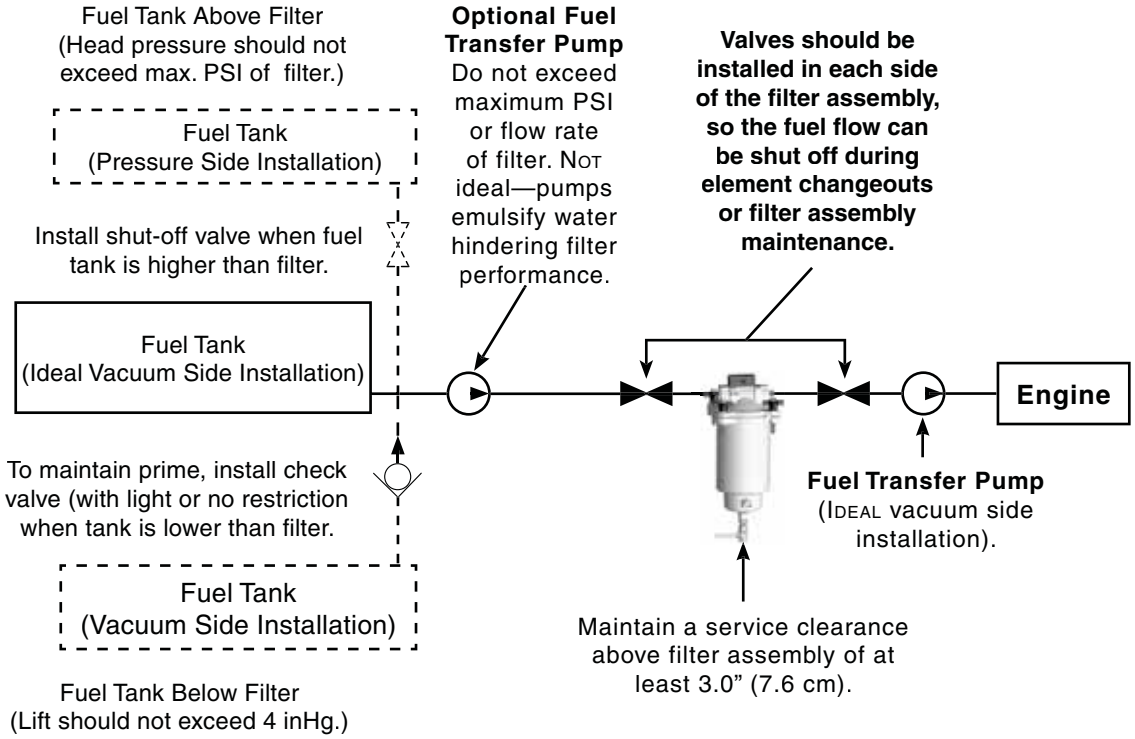

Marine FBO

Mounting Information

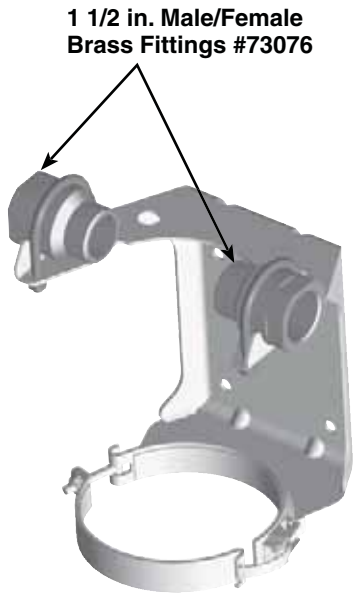

Mounting Bracket View
#73167

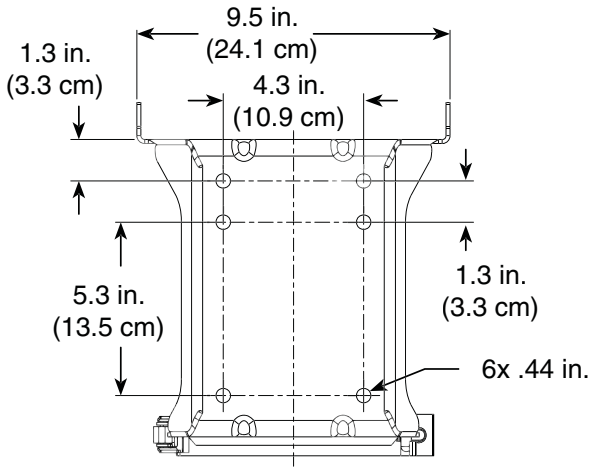

Front View

Top View

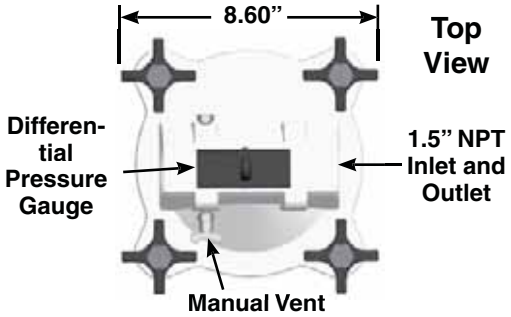

Replacement Parts

FBO-10-MA & FBO-14-MA

	Part Number	Description
1.	**72712**	Bolt Kit with Nobs
2.	**72695**	Pet Cock Assembly
3.	**73152**	Head Kit (1 1/2” NPT Ports)
4.	**72368**	Spring
5.	**72896**	Seal Kit (Viton)
6.	**Replacement Elements (see element chart)**	
	FBO-10-MA	Use a (6”x10”) Element
	FBO-14-MA	Use a (6”x14”) Element
7.	**73160**	FBO-10-MA Housing Assembly
	73161	FBO-14-MA Housing Assembly
8.	**72710**	Sight Glass Assembly (1/2” NPT)
9.	**RK 21069**	Water Sensor
10.	**71943-.25**	Brass Ball Valve

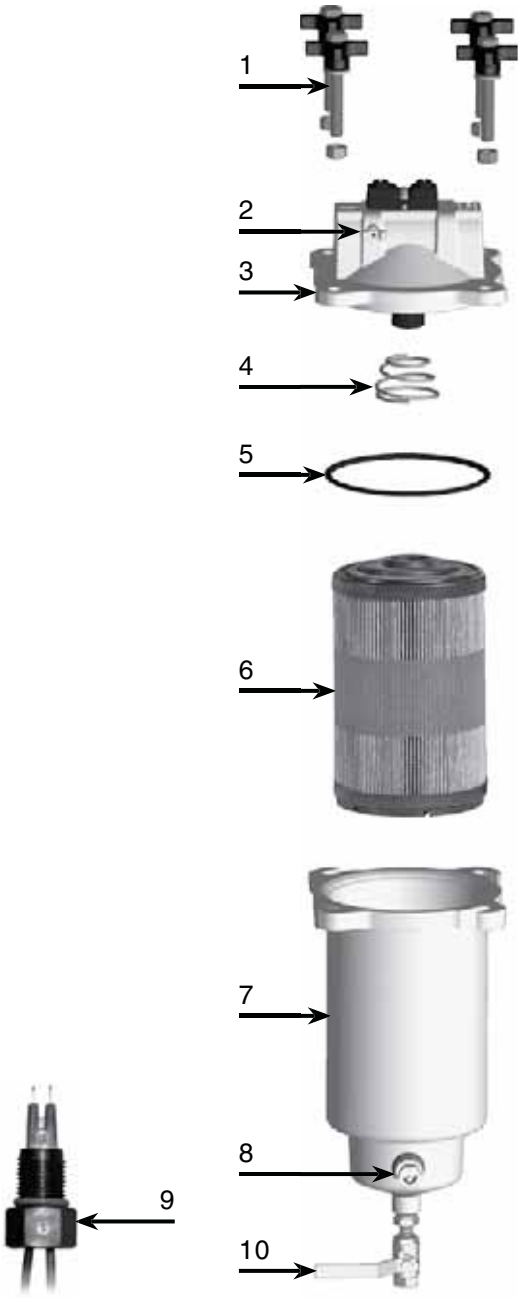

Marine Turbine Series

Marine Turbine Series

1000MA

All Racor filter materials and seals are compatible with ultra-low sulphur diesel (ULSD) fuel and B2 to B20 Biodiesel. See Racor bulletin 7679.

Water-in-fuel sensor and indicator.

The complete Primer Pump Kit makes installation quick and easy.

12V DC or 24V DC Motor.

MA units have shielded see-thru bowls; MAM bowls are all-metal.

100 micron pre-screen.

Unitized assembly only 3.3" tall.

UL-listed drain valve and water sensor probe options are available.

A rugged rollercell pump. 60 gph flow rate while in priming mode.

75900MAX

75500MAX

791000MAV

And more…

Turbine Series Electric Primer Pump

The Turbine Series Electric Primer Pump Kits can be retrofitted to many of the Racor 900 or 1000 series fuel filters already in service. The Filter Pump is an innovative and proprietary system consisting of a pre-screen filter, a flow bypass circuit and a roller cell pump powered by a DC motor. When the switch is activated the fuel is drawn into the pre-screen and then pumped through the housing, refilling the unit with fuel. When not in use the Filter Pump system is bypassed and the Racor fuel filter/water separator functions normally.

The RKP1912, 12V DC Kit, contains a traditional brushed motor design. The RKP1924, 24V DC Kit, contains innovative brushless motor technology.

The use of this primer pump kit allows the operator to easily re-prime the Racor Filter/Separator directly from the fuel storage tank with no mess

Marine Turbine Series filter assemblies are designed to be installed on the vacuum side of the fuel transfer pump for best efficiency and protect precision engine components from dirt, rust, algae, asphaltines, varnishes, and especially water, which is prevalent in engine fuels. They remove contaminates from fuel using the following legendary three stage process:

Stage One: Separation

As fuel enters the filter assembly, it moves through the centrifuge and spins off large solids and water droplets which fall to the bottom of the collection bowl.

Stage Two: Coalescing

Small water droplets bead-up on the surface of the conical baffle and cartridge element. When heavy enough, they too fall to the bottom of the bowl.

Stage Three: Filtration

Proprietary Aquabloc™II cartridge elements repel water and remove contaminants from fuel down to 2 micron (nominal). They are waterproof and effective longer then water absorbing elements.

Questions? Contact Technical Support:
800 344 3286 or 209 521 7860 ext. 7555
e-mail: racortech@parker.com

500 Series Overview

Applies to all models.

Specifications	500MA[1]	500MAM	503MA	75500MAX	75500MAXM
Maximum Flow Rate ***One Filter On-line*** ***Two Filters On-line***	60 GPH (227 LPH) N/A	60 GPH (227 LPH) N/A	60 GPH (227 LPH) N/A	60 GPH (227 LPH) 120 GPH (454 LPH)	60 GPH (227 LPH) 120 GPH (454 LPH)
Application	Diesel	Gasoline or Diesel	Diesel	Diesel	Gasoline or Diesel
Port Size	3/4”-16 (SAE J1926)	3/4”-16 (SAE J1926)	3/8” NPTF	3/4”-16 (SAE J1926)	3/4”-16 (SAE J1926)
Height	11.5 in. (29.2 cm)	11.0 in. (27.9 cm)	11.5 in. (29.2 cm)	11.5 in. (29.2 cm)	11.0 in. (27.9 cm)
Width	5.8 in. (14.7 cm)	5.8 in. (14.7 cm)	5.8 in. (14.7 cm)	14.5 in. (36.8 cm)	14.5 in. (36.8 cm)
Depth	4.8 in. (12.2 cm)	4.8 in. (12.2 cm)	4.8 in. (12.2 cm)	9.5 in. (24.1 cm)	9.5 in. (24.1 cm)
Weight	4.0 lb (1.7 kg)	5.0 lb (2.2 kg)	4.0 lb (1.7 kg)	17 lb (7.7 kg)	18 lb (8.2 kg)
Clean Pressure Drop	0.3 PSI (1.7 kPa)	0.3 PSI (1.7 kPa)	0.3 PSI (1.7 kPa)	0.7 PSI (4.8 kPa)	0.7 PSI (4.8 kPa)
Maximum Pressure	25 PSI (1.0 bar)	25 PSI (1.0 bar)	25 PSI (1.0 bar)	25 PSI (1.0 bar)	25 PSI (1.0 bar)
Water Capacity	3.7 oz (110 ml)	3.7 oz (110 ml)	3.7 oz (110 ml)	7.4 oz (220 ml)	7.4 oz (220 ml)
Overhead Clearance	4.0 in. (10.2 cm)	4.0 in. (10.2 cm)	4.0 in. (10.2 cm)	4.0 in. (10.2 cm)	4.0 in. (10.2 cm)
Water Removal Efficiency	99%	99%	99%	99%	99%
Ambient Fuel Temperature	-40° to +250°F[2] (-40° to +121°C)				
Max. Fuel Temperature	190°F (32°C)				

[1] Add * for optional 16MM ports. Example (*500MA30).
[2] With maximum fuel temperature 190°F (32°C).

Marine Turbine Series

900 Series Overview

Applies to all models.

Specifications	900MA	900MAM	903MA	75900MAX	75900MAXM
Maximum Flow Rate:One Filter On-line *Two Filter On-line*	90 GPH (341 LPH) N/A	90 GPH (341 LPH) N/A	90 GPH (341 LPH) N/A	90 GPH (341 LPH) 180 GPH (681 LPH)	90 GPH (341 LPH) 180 GPH (681 LPH)
Application	Diesel	Gasoline or Diesel	Diesel	Diesel	Gasoline or Diesel
Port Size	7/8”-14 (SAE J1926)	7/8”-14 (SAE J1926)	1/2”-14 NPT	7/8”-14 (SAE J514)	7/8”-14 (SAE J514)
Height	17.0 in. (43.2 cm)	16.5 in. (41.9 cm)	17.0 in. (43.2 cm)	17.0 in. (43.2 cm)	16.5 in. (41.9 cm)
Width	6.0 in. (15.2 cm)	6.0 in. (15.2 cm)	6.0 in. (15.2 cm)	18.8 in. (47.6 cm)	18.8 in. (47.6 cm)
Depth	7.0 in. (17.8 cm)	7.0 in. (17.8 cm)	7.0 in. (17.8 cm)	11.0 in. (27.9 cm)	11.0 in. (27.9 cm)
Weight	6.0 lb (2.7 kg)	7.0 lb (3.2 kg)	6.0 lb (2.7 kg)	23 lb (10.4 kg)	24 lb (10.9 kg)
Clean Pressure Drop	0.34 PSI (2.4 kPa)	0.34 PSI (2.4 kPa)	0.34 PSI (2.4 kPa)	1.7 PSI (11.7 kPa)	1.7 PSI (11.7 kPa)
Maximum Pressure	25 PSI (1.0 bar)	25 PSI (1.0 bar)	25 PSI (1.0 bar)	25 PSI (1.0 bar)	25 PSI (1.0 bar)
Water Capacity	10.3 oz (305 ml)	10.3 oz (305 ml)	10.3 oz (305 ml)	20.6 oz (610 ml)	20.6 oz (610 ml)
Overhead Clearance	5.0 in. (12.7 cm)	5.0 in. (12.7 cm)	5.0 in. (12.7 cm)	5.0 in. (12.7 cm)	5.0 in. (12.7 cm)
Water Removal Efficiency	99%	99%	99%	99%	99%
Ambient Fuel Temperature	-40° to +250°F[1] (-40° to +121°C)				
Max. Fuel Temperature	190°F (32°C)				

[1] With maximum fuel temperature 190°F (32°C).

Questions? Contact Technical Support:
800 344 3286 or 209 521 7860 ext. 7555
e-mail: racortech@parker.com

1000 Series Overview

Applies to all models.

Specifications	1000MA	1000MAM	1003MA	731000MA	731000MAM
Maximum Flow Rate: One Filter On-line	180 GPH (681 LPH)	180 GPH (681 LPH)	180 GPH (681 LPH)	N/A	N/A
Two Filters On-line	N/A	N/A	N/A	360 GPH (1363 LPH)	360 GPH (1363 LPH)
Application	Diesel	Gasoline or Diesel	Diesel	Diesel	Gasoline or Diesel
Port Size	7/8”-14 (SAE J1926)	7/8”-14 (SAE J1926)	1/2”-14 NPT	3/4”-14 (SAE J476)	3/4”-14 (SAE J476)
Height	22.0 in. (55.9 cm)	21.5 in. (54.5 cm)	22.0 in. (55.9 cm)	22.0 in. (55.9 cm)	21.5 in. (54.5 cm)
Width	6.0 in. (15.2 cm)	6.0 in. (15.2 cm)	6.0 in. (15.2 cm)	16.5 in. (41.9 cm)	16.5 in. (41.9 cm)
Depth	7.0 in. (17.8 cm)	7.0 in. (17.8 cm)	7.0 in. (17.8 cm)	12.0 in. (30.5 cm)	12.0 in. (30.5 cm)
Weight	10 lb (4.5 kg)	11 lb (5.0 kg)	10 lb (4.5 kg)	26 lb (11.8 kg)	27 lb (12.2 kg)
Clean Pressure Drop	0.5 PSI (3.4 kPa)	0.5 PSI (3.4 kPa)	0.5 PSI (3.4 kPa)	1.7 PSI (11.7kPa)	1.7 PSI (11.7 kPa)
Maximum Pressure	25 PSI (1.0 bar)	25 PSI (1.0 bar)	25 PSI (1.0 bar)	25 PSI (1.0 bar)	25 PSI (1.0 bar)
Water Capacity	10.3 oz (305 ml)	10.3 oz (305 ml)	10.3 oz (305 ml)	20.6 oz (610 ml)	20.6 oz (610 ml)
Overhead Clearance	10.0 in. (25.4 cm)	10.0 in. (25.4 cm)	10.0 in. (25.4 cm)	10.0 in. (25.4 cm)	10.0 in. (25.4 cm)
Water Removal Efficiency	99%	99%	99%	99%	99%
Ambient Fuel Temperature	-40° to +250°F (-40° to +121°C)				
Max Fuel Temperature	190oF (32oC)				

Marine Turbine Series

1000 Series Overview

Applies to all models.

Specifications	751000MAX	751000MAXM	771000MA	791000MAV
Maximum Flow Rate:One Filter On-line *Two Filters On-line* *Three Filters On-line*	180 GPH (681 LPH) 360 GPH (1363 LPH) N/A	180 GPH (681 LPH) 360 GPH (1363 LPH) N/A	N/A N/A 540 GPH (2044 LPH)	180 GPH (681 LPH) 360 GPH (1363 LPH 540 GPH (2044 LPH)
Application	Diesel	Gasoline or Diesel	Diesel	Diesel
Port Size	7/8”-14 (SAE J514)	7/8”-14 (SAE J514)	1”-11.5 (SAE J476)	3/4”-14 (SAE J476)
Height	22.0 in. (55.9 cm)	21.5 in. (54.6 cm)	22.0 in. (55.9 cm)	22.0 in. (55.9 cm)
Width	18.8 in. (47.6 cm)	18.8 in. (47.6 cm)	21.5 in. (54.6 cm)	21.5 in. (54.6 cm)
Depth	11.0 in. (27.9 cm)	11.0 in. (27.9 cm)	12.0 in. (30.5 cm)	11.8 in. (30.0 cm)
Weight	30 lb (13.6 kg)	31 lb (14.1 kg)	39 lb (17.7 kg)	52 lb (23.6 kg)
Clean Pressure Drop	3.7 PSI (25.5 kPa)	3.7 PSI (25.5 kPa)	1.7 PSI (11.7 kPa)	2.5 PSI (17.2 kPa)
Maximum Pressure	25 PSI (1.0 bar)	25 PSI (1.0 bar)	25 PSI (1.0 bar)	25 PSI (1.0 bar)
Bowl Capacity	20.6 oz (610 ml)	20.6 oz (610 ml)	30.9 oz (915 ml)	30.9 oz (915 ml)
Overhead Clearance	10.0 in. (25.4 cm)	10.0 in. (25.4 cm)	10.0 in. (25.4 cm)	10.0 in. (25.4 cm)
Water Removal Efficiency	99%	99%	99%	99%
Ambient Fuel Temperature	-40° to +250°F[1] (-40° to +121°C)			
Max. Fuel Temperature	190oF (32oC)			

Questions? Contact Technical Support:
800 344 3286 or 209 521 7860 ext. 7555
e-mail: racortech@parker.com

How to Order

(The example below illustrates how the part numbers are constructed).

*	500MA	M	10
Add * for optional 16MM ports	Basic Model Use model **503MA** for 3/8" NPTF Pipe Thread	Add **M** for metal bowl.	Specify: **2** (for 2 micron) **10** (for 10 micron) **30** (for 30 micron)

Replacement Element (seals included)		
2010SM-OR	2 micron	Final
2010TM-OR	10 micron	Secondary
2010PM-OR	30 micron	Primary[1]
[1] A secondary or final filter is required downstream.		

All 2010 Series filters are 2.7" tall by 3.1" in diameter.

Not all configurations are available - contact Technical Support for more information.

Mounting Information

500MA
Certifications

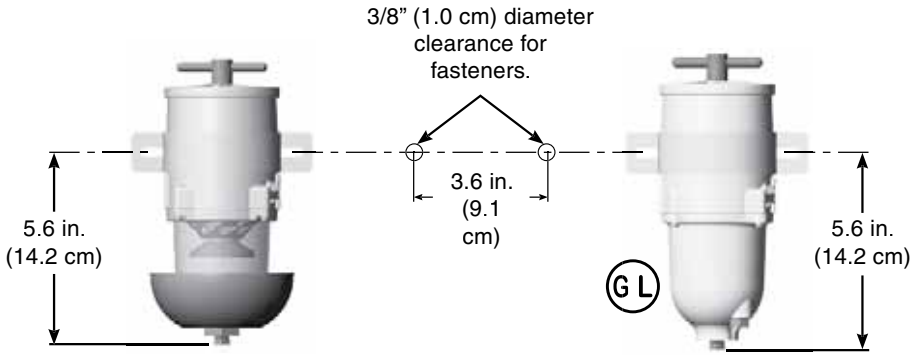

Marine Turbine Series

Replacement Parts

500MA and 503MA

	Part Number	Description
1.	**RK 11888**	T-handle Kit (includes o-ring)
2.	**RK15078-02**	MA Lid Kit (white) (includes #3)
3.	**15005**	Lid Gasket
4.	Replacement Elements (includes #3)	
	2010SM-OR	2 Micron
	2010TM-OR	10 Micron
	2010PM-OR	30 Micron
5.	**RK 15090**	Mounting Bracket Kit
6.	**15418-09**	500MA Body (3/4”-16 UNF Ports)
	15418-08	500MA Body (16MM ports)
	15418-10	503MA Body (3/8” NPTF Ports)
7.	**RK 15010B**	Checkball Kit (includes seal)
8.	**RK 15013D**	Turbine/Centrifuge Kit
9.	**15374**	Bowl Gasket
10.	**RK 15279-01**	Clear Bowl Kit (includes #9)
	RK 15301-01	Metal Bowl Kit (includes #9)
11.	**RK 20022**	Probe Port Plug Kit
12.	**RK 15035-01**	Bowl Ring (includes # 9)
13.	**RK 15081**	Capscrew Kit (10-24 x 7/8”) (includes 4 capscrews)
14.	**RK 11340**	Drain Fitting O-ring Kit
15.	**RK 15104**[1]	Heat Deflector Shield Kit (includes #’s 14 & 16)
16.	**RK 11-1910**	Drain Fitting Kit (includes # 14)

Additional Parts (not shown)

RK 11341	Drain Washer
RK 19492	Marine Shut-off Valve Kit
RK 21069[2]	Water Probe Kit
RK 15211	Complete Seal Service Kit
15335	Installation Instructions

[1]For replacement only. The Coast Guard does not accept ‘FH’ units converted to ‘MA’ configurations.

[2]For diesel service only. Must be used with a water Detection Kit.

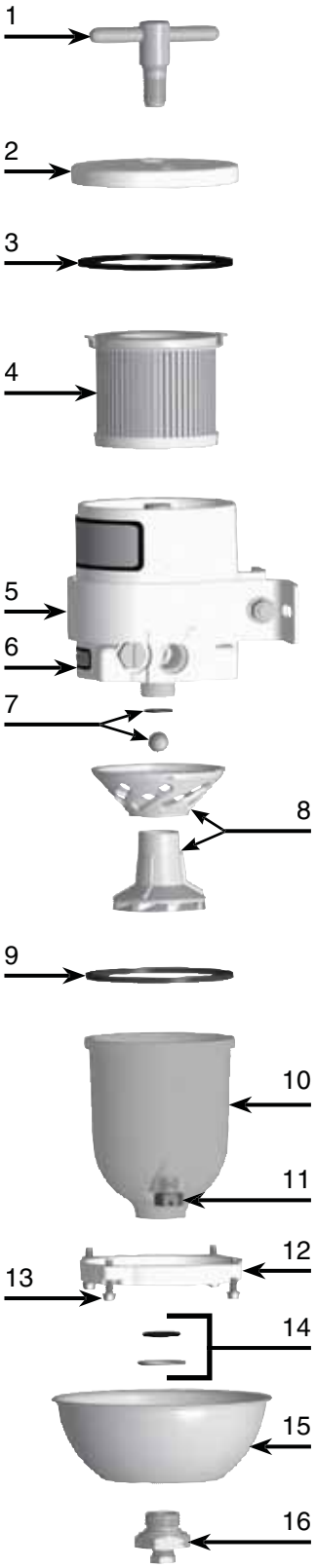

Questions? Contact Technical Support:
800 344 3286 or 209 521 7860 ext. 7555
e-mail: racortech@parker.com

How to Order

(The example below illustrates how the part numbers are constructed).

900MA	M	10
Basic Model Number Use model **903MA** for 22x1.5 mm metric thread	Add **M** for metal bowl.	Specify: **2** (for 2 micron) **10** (for 10 micron) **30** (for 30 micron)

Replacement Element (seals included)		
2040SM-OR	2 micron	Final
2040TM-OR	10 micron	Secondary
2040PM-OR	30 micron	Primary[1]

[1] A secondary or final filter is required downstream.

All 2040 Series filters are 4.6" tall by 4.7" in diameter.

Not all configurations are available - contact Technical Support for more information.

Mounting Information

900MA
Certifications

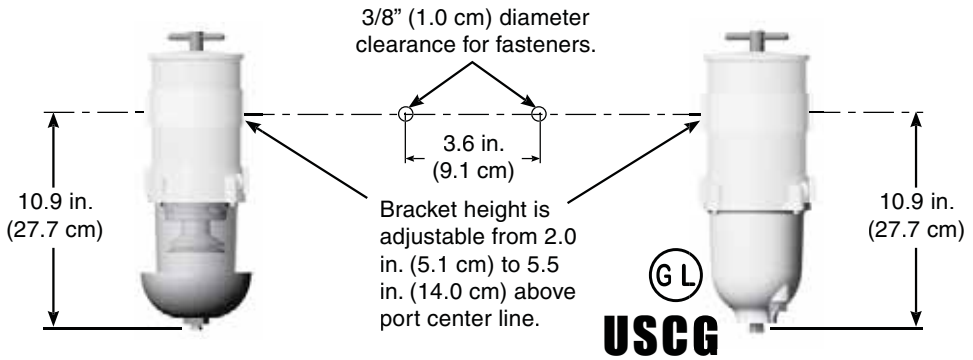

Marine Turbine Series

Replacement Parts

900MA and 903MA

	Part Number	Description
1.	**RK 11888**	T-handle Kit (includes o-ring)
2.	**RK 11-1933-04**	Lid Kit (includes #3)
3.	**11007**	Lid O-ring
4.	Replacement Element (includes #3)	
	2040SM-OR	2 Micron Element
	2040TM-OR	10 Micron Element
	2040PM-OR	30 Micron Element
5.	R**K 11815-102**	Body Clamp Bracket Kit
6.	**RK 19002-02**	Outer Cylinder Kit (includes # 9)
7.	**RK 11028B**	Checkball and Seal Kit
8.	**RK 11026D**	Turbine/Centrifuge Kit
9.	**11007**	Bowl O-ring
10.	**RK 11-1606-1**	Clear Bowl Kit (includes # 9)
	RK 11734	Metal Bowl Kit
	RK 11734-01	Metal Bowl Kit (1/4"NPT)
11.	**RK 11037A**	Bowl Ring Kit
12.	**RK 11542**	Capscrew Kit (1/4"-20 x 1") (includes 4 capscrews)
13.	**RK 11341**	Bowl Drain Gasket Kit
	11041	Bowl Drain Washer
14.	**RK 11868**[1]	Heat Deflector Shield
15.	**RK 11-1910**	Drain Fitting Kit
	RK 11340	Drain O-ring Kit
16.	**RK 20022**	Probe Port Plug Kit

Additional Parts (not shown)

RK 19492	Marine Shut-off Valve Kit
RK 21069	Water Probe Kit
RK 11-1679	Plastic Body Plug Kit
RK 11-1404	Complete Seal Service Kit
19526	Installation Instructions
N/A	Base with 22x1.5 mm ports

[1]For replacement only. The Coast Guard does not accept 'FH' units converted to 'MA' configurations.

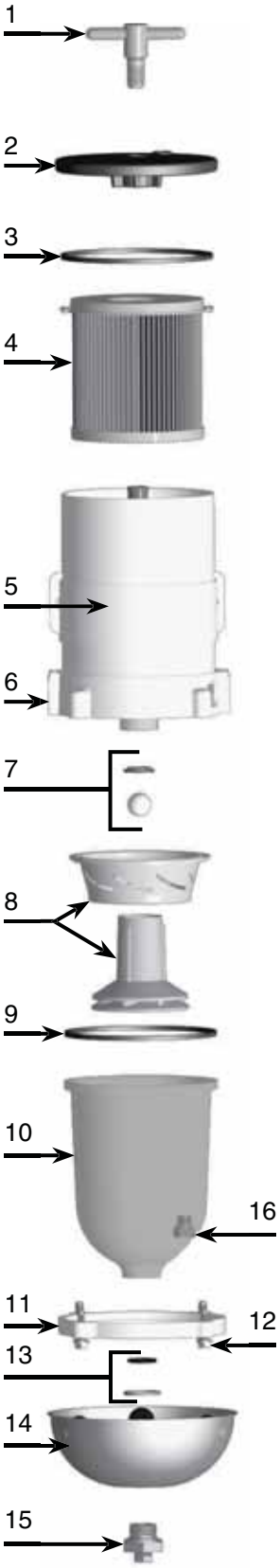

Questions? Contact Technical Support:
800 344 3286 or 209 521 7860 ext. 7555
e-mail: racortech@parker.com

How to Order

(The example below illustrates how the part numbers are constructed).

1000MA	M	10
Basic Model Use model **1003MA** for 22x1.5 mm metric thread	Add **M** for metal bowl.	Add: **2** (for 2 micron) **10** (for 10 micron) **30** (for 30 micron)

Replacement Element (seals included)		
2020SM-OR	2 micron	Final
2020TM-OR	10 micron	Secondary
2020PM-OR	30 micron	Primary[1]

[1] A secondary or final filter is required downstream.

All 2020 Series filters are 9.6" tall by 4.7" in diameter.

Not all configurations are available - contact Technical Support for more information.

Mounting Information

1000MA
Certifications

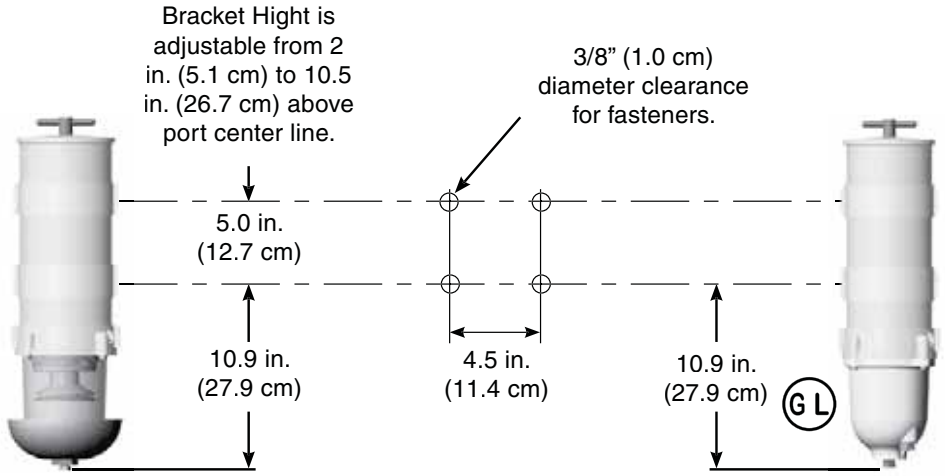

Marine Turbine Series

Replacement Parts

1000MA and 1003MA

	Part Number	Description
1.	**RK 11888**	T-handle Kit (includes o-ring)
2.	**RK 11-1933-04**	Lid Kit (includes #3)
3.	**11007**	Lid Gasket
4.	Replacement Element (includes #3)	
	2020SMOR	2 Micron Element
	2020TMOR	10 Micron Element
	2020PMOR	30 Micron Element
5.	**RK 11815-102**	Turbine Body Bracket Kit
6.	**RK 11-1776-05**	1000MA Base (include # 9)
	11-1835-01	1003MA Base (with 1/2"-14 BSPT ports)
	RK 11021-02	Outer Cylinder Kit (include # 9)
7.	**RK 11028B**	Checkball and Seal Kit
8.	**RK 11026D**	Turbine/Centrifuge Kit (includes # 7, 8 & 9)
9.	**11007**	Bowl O-ring
10.	**RK 11-1606-1**	Clear Bowl Kit (includes # 9 & 13)
	RK 11734	Metal Bowl Kit (includes #'s 9, 12 & 15)
	RK 11734-01	Metal Bowl (1/4"NPT) (includes #'s 9, 12, 15 & probe port plug)
11.	**RK 11037A**	Bowl Ring Kit (includes #12)
12.	**RK 11542**	Capscrew Kit (4 screws) (1/4"-20 x 1")
13.	**RK 11341**	Bowl Drain Gasket Kit
	RK 11340	Drain Fitting O-ring
14.	**RK 11868**[1]	Heat Deflector Kit (includes #'s 13-15)
15.	**918-N4**	Bowl Plug (1/4" NPT)
	RK 11-1910	Bowl Drain Fitting Kit
Additional Parts (not shown)		
	RK 20022	Probe Port Plug Kit
	RK 19492	Shut-off Drain Valve Kit
	RK 21069[2]	Water Probe Kit (MA Bowls)
	RK 11-1679	Plastic Plug Kit
	RK 11-1404	Complete Service Kit
	19526	Installation Instructions

[1]For replacement only. The Coast Guard does not accept 'FH' units converted to 'MA' configurations.

[2]For diesel service only. Must be used with a Water Detection Kit.

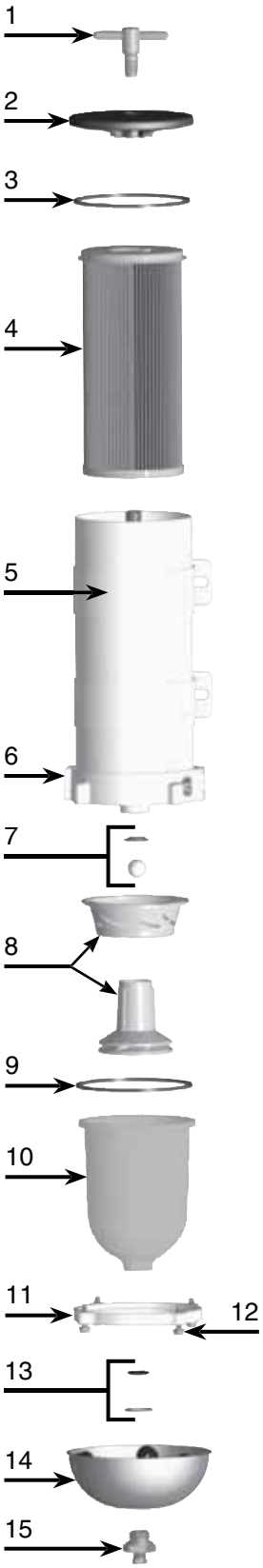

Questions? Contact Technical Support:
800 344 3286 or 209 521 7860 ext. 7555
e-mail: racortech@parker.com

How to Order

(The example below illustrates how the part numbers are constructed).

731000MA	M	10
Basic Model	Add **M** for metal bowl	Specify: **2** (for 2 micron) **10** (for 10 micron) **30** (for 30 micron)

Replacement Element (seals included)		
2020SM-OR	2 micron	Final
2020TM-OR	10 micron	Secondary
2020PM-OR	30 micron	Primary[1]

[1] A secondary or final filter is required downstream.

Not all configurations are available - contact Technical Support for more information.

Mounting Information

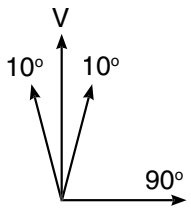

Note:
1. Mount filter assembly as close to vertical (V) as possible. For best efficiency, do not exceed 10° from V.
2. Do not remove valve fittings as they are integral components to the valve body.

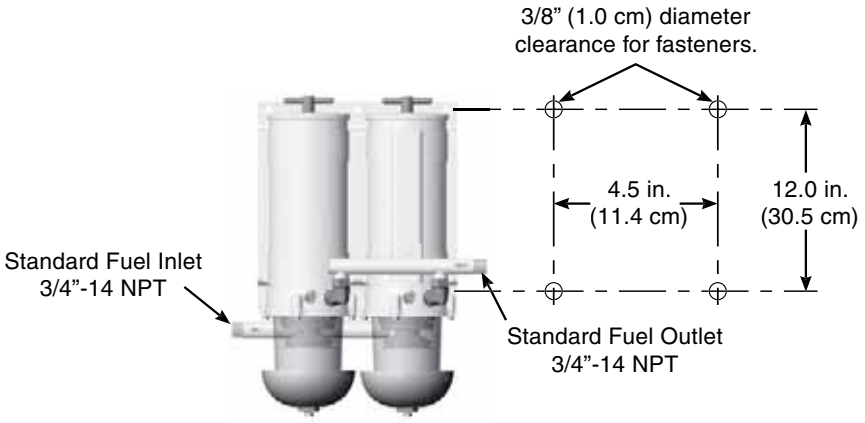

Marine Turbine Series

Replacement Parts

731000MA

	Part Number	Description
1.	**1000MA**	Refer to model 1000MA for a complete part breakdown.
2.	**11-1629-01**	Dual unit Bracket
	11895-02	Clamp Bracket Assembly
3.	**11923**	Outlet Manifold
4.	**11072**	Elbow Fitting (Parker #2507-10-8)
5.	**11892**	Inlet Manifold

Additional Parts (not shown)

RK 19492	UL Listed Brass Marine Valve Kit (use two for use with this unit)
19531	Installation Instructions

For water detection kits see the marine Accessories.

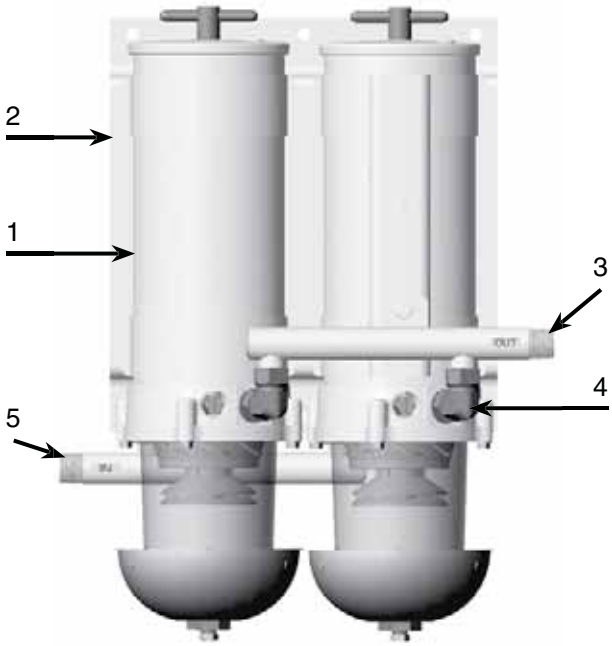

731000MA
Certifications

Questions? Contact Technical Support:
800 344 3286 or 209 521 7860 ext. 7555
e-mail: racortech@parker.com

How to Order

(The example below illustrates how the part numbers are constructed).

75500MAX	M	10
Basic Model	Add **M** for metal bowl	Add: **2** (for 2 micron) **10** (for 10 micron) **30** (for 30 micron)

Replacement Element (seals included)		
2010SM-OR	2 micron	Final/Secondary
2010TM-OR	10 micron	Primary/Secondary
2010PM-OR	30 micron	Primary[1]

[1] A secondary/final filter is required downstream.

Not all configurations are available - contact Technical Support for more information.

Mounting Information

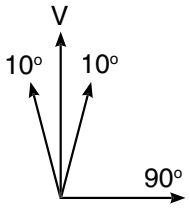

Note:
1. Mount filter assembly as close to vertical (V) as possible. For best efficiency, do not exceed 10° from V.
2. Do not remove valve fittings as they are integral components to the valve body.

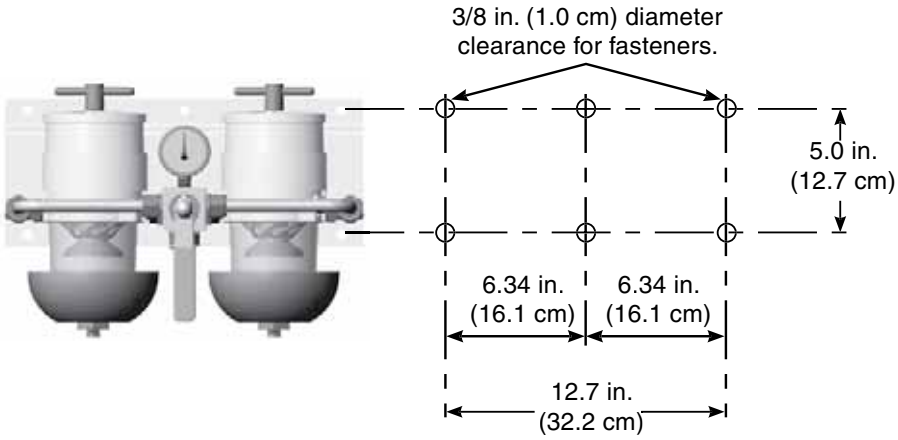

Marine Turbine Series

Replacement Parts

75500MAX

	Part Number	Description
1.	**500MA**	Refer to model 500MA for a complete part breakdown
2.	**RK 15390**	6 Port Valve Kit
3.	**RK 15391**	Rigid Tubing Kit
4.	**RK 15378**	Body Clamp Bracket Kit (One-Piece)
	RK 15300	Body Clamp Bracket Kit (Three-Piece)
5.	**RK 15329**	Mounting Bracket Kit
6.	**RK 19476**	Gauge Kit

Additional Parts (not shown)

RK 19492	UL Listed Brass Marine Drain Kit (two for use with this unit)
15349	Installation Instructions

75500MAX
Certifications

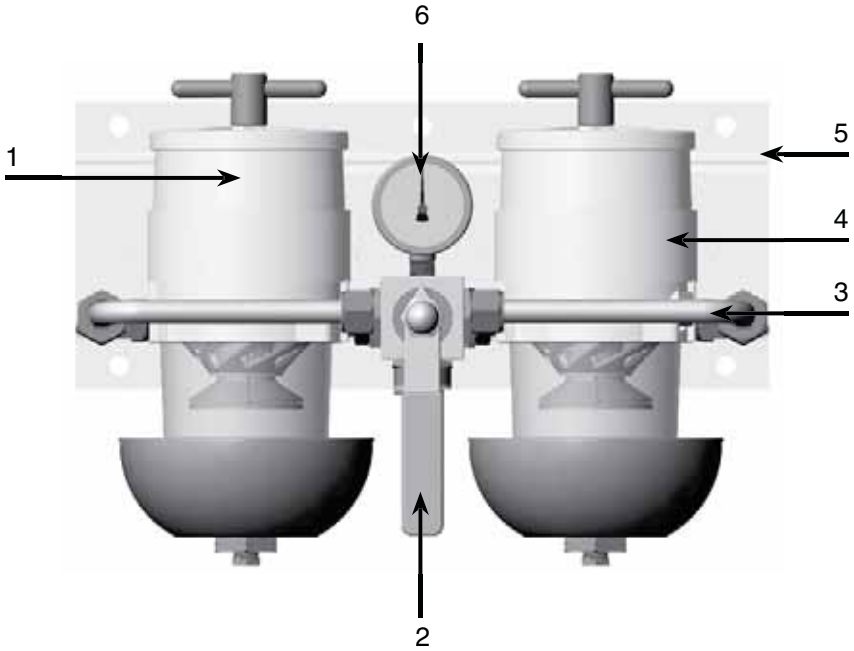

Questions? Contact Technical Support:
800 344 3286 or 209 521 7860 ext. 7555
e-mail: racortech@parker.com

How to Order

(The example below illustrates how the part numbers are constructed).

75900MAX	M	10
Basic Model	Add **M** for metal bowl	Add: **2** (for 2 micron) **10** (for 10 micron) **30** (for 30 micron)

Replacement Element (seals included)		
2040SM-OR	2 micron	Final
2040TM-OR	10 micron	Secondary
2040PM-OR	30 micron	Primary[1]

[1] A secondary or final filter is required downstream.

Not all configurations are available - contact Technical Support for more information.

Mounting Information

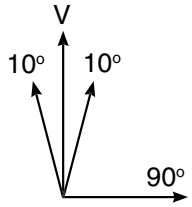

Note:
1. Mount filter assembly as close to vertical (V) as possible. For best efficiency, do not exceed 10° from V.
2. Do not remove valve fittings as they are integral components to the valve body.

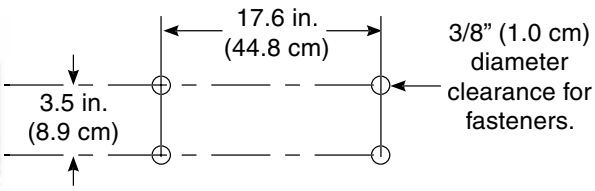

NOTE: The Inlet / Outlet Port Male Fittings are 7/8"-14 UNF threads with 37° Flare (JIC); SAEJ514. These permanent fittings must not be removed. Damage to the valve may result. See fittings selection chart in Accessories Section to adapt to your fuel system piping requirements.

Marine Turbine Series

Replacement Parts

75900MAX

	Part Number	Description
1.	**900MA**	Refer to model 900MA for a complete part breakdown.
2.	**RK 19473**	6 Port Valve Kit
	RK 19506	Valve Service Kit
3.	**RK 19475**	Rigid Tubing Kit
4.	**RK 19486**	Dual unit Bracket Kit
5.	**RK 19476**	Gauge Assembly Kit

Additional Parts (not shown)

RK 19492	UL Listed Brass Marine Valve Kit (two for use with this unit)
19519	Installation Instructions

75900MAX
Certifications

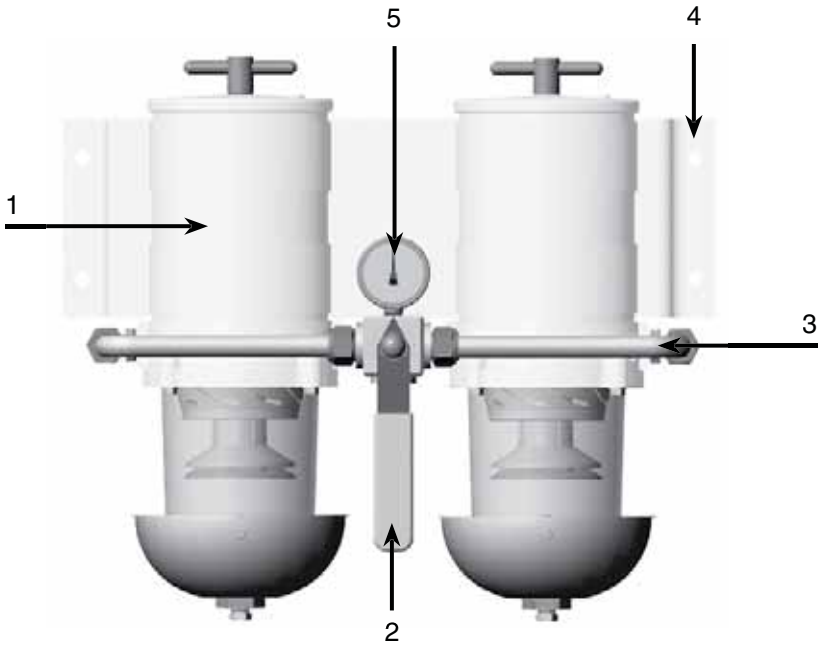

Questions? Contact Technical Support:
800 344 3286 or 209 521 7860 ext. 7555
e-mail: racortech@parker.com

How to Order

(The example below illustrates how the part numbers are constructed).

751000MAX	M	10
Basic Model	Add **M** for metal bowl.	Add: **2** (for 2 micron) **10** (for 10 micron) **30** (for 30 micron)

Replacement Element (seals included)		
2020SM-OR	2 micron	Final/Secondary
2020TM-OR	10 micron	Primary/Secondary
2020PM-OR	30 micron	Primary[1]

[1] A secondary or final filter is required downstream.

Not all configurations are available - contact Technical Support for more information.

Mounting Information

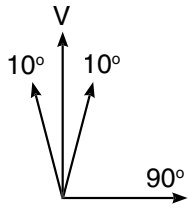

Note:
1. Mount filter assembly as close to vertical (V) as possible. For best efficiency, do not exceed 10° from V.
2. Do not remove valve fittings as they are integral components to the valve body.

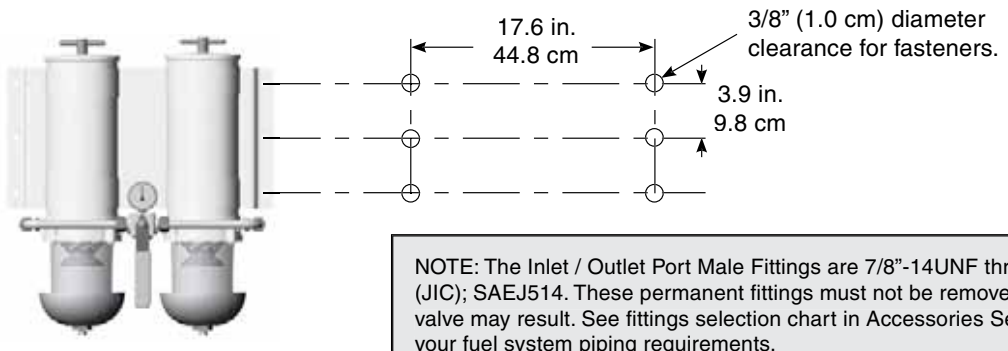

NOTE: The Inlet / Outlet Port Male Fittings are 7/8"-14UNF threads with 37° Flare (JIC); SAEJ514. These permanent fittings must not be removed. Damage to the valve may result. See fittings selection chart in Accessories Section to adapt to your fuel system piping requirements.

Marine Turbine Series

Replacement Parts

751000MAX

	Part Number	Description
1.	**1000MA**	Refer to model 1000MA for a complete part breakdown.
2.	**RK 19473**	6 Port Valve Assembly Kit
	RK 19506	Stem Service Kit
3.	**RK 19475**	Rigid Tubing Assembly Kit
4.	**RK 11-1777**	Dual unit Bracket Kit
5.	**RK 19476**	Gauge Assembly Kit

Additional Parts (not shown)

RK 19492	UL Listed Brass Marine Drain Valve Kit (two for use with this unit)
19519	Installation Instructions

751000MAX
Certifications

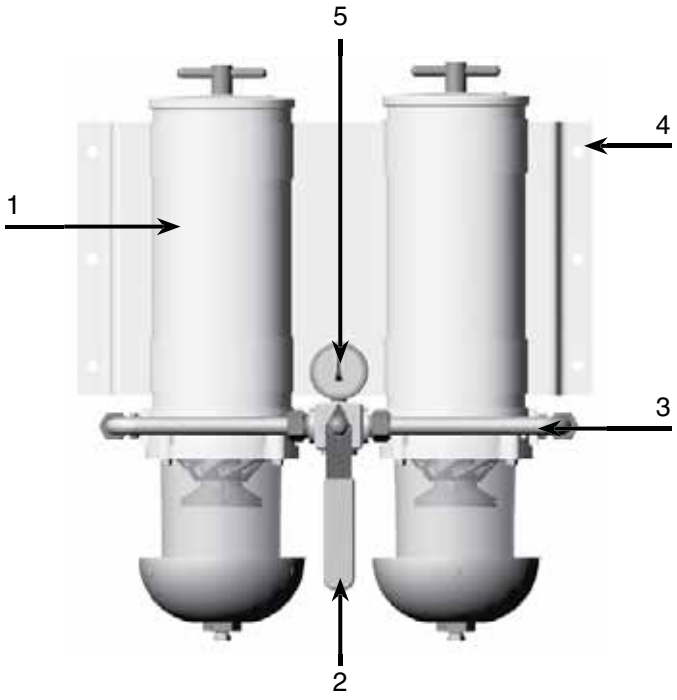

Questions? Contact Technical Support:
800 344 3286 or 209 521 7860 ext. 7555
e-mail: racortech@parker.com

How to Order

(The example below illustrates how the part numbers are constructed).

771000MA	M	10
Basic Model	Add **M** for metal bowl.	Add: **2** (for 2 micron) **10** (for 10 micron) **30** (for 30 micron)

Replacement Element (seals included)		
2020SM-OR	2 micron	Final/Secondary
2020TM-OR	10 micron	Primary/Secondary
2020PM-OR	30 micron	Primary[1]

[1] A secondary or final filter is required downstream.

Not all configurations are available - contact Technical Support for more information.

Mounting Information

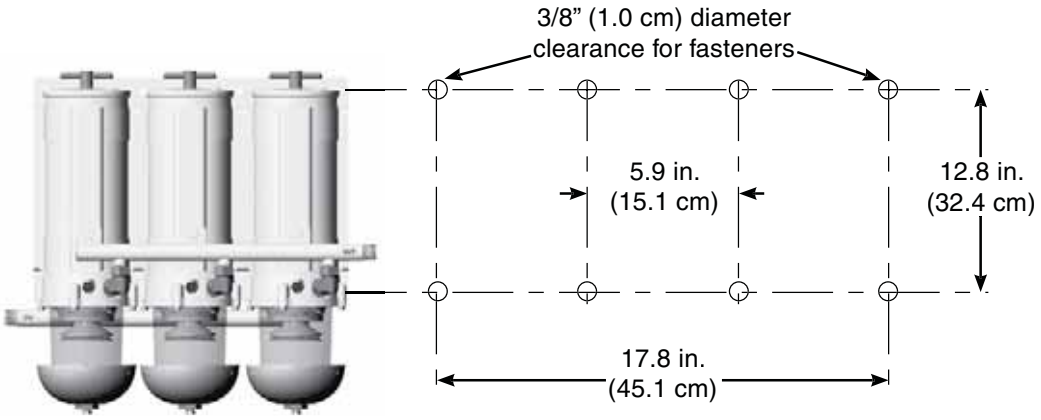

Marine Turbine Series

Replacement Parts

771000MA

	Part Number	Description
1.	**1000MA**	Refer to model 1000MA for a complete part breakdown.
2.	**11895-02**	Clamp Bracket Kit
	11-1632-01	Triple unit Bracket
	11895	Clamp Bracket Assembly
3.	**11893**	Inlet Manifold
4.	**11072**	Elbow Fitting (Parker #2507-10-8)
5.	**11902**	Outlet Manifold

Additional Parts (not shown)

RK 19492	UL Listed Brass Marine Drain Valve Kit (three for use with this unit)
19531	Installation Instructions

For Water Detection Kits and Manifold Conversion Kits, see the Accessories Section.

771000MA
Certifications

How to Order

(The example below illustrates how the part numbers are constructed).

791000MAV	M	10
Basic Model	Add **M** for metal bowl.	Add: **2** (for 2 micron) **10** (for 10 micron) **30** (for 30 micron)

Replacement Element (seals included)		
2020SM-OR	2 micron	Final
2020TM-OR	10 micron	Secondary
2020PM-OR	30 micron	Primary[1]

[1] A secondary or final filter is required downstream.

Not all configurations are available - contact Technical Support for more information.

Mounting Information

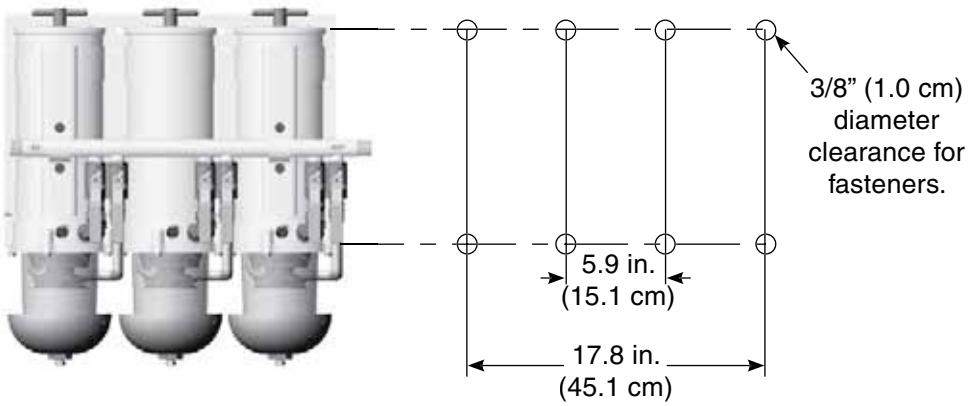

Marine Turbine Series

Replacement Parts

791000MAV

	Part Number	Description
1	**1000MA**	Refer to model 1000MA for a complete part breakdown.
2	**11-1632**	Triple unit Bracket
3	**19460**	Inlet Manifold
4	**11895-02**	Clamp Bracket
	11-1761	'U' Bracket
5	**19461**	Outlet Manifold
6	**RK 11073**	1/2" Ball Valve Kit
7	**11-1626**	Formed Tubing Assembly

Additional Parts (not shown)

	RK 19492	UL Listed Brass Marine Drain Valve Kit (three for use with this unit)
	19523	Installation Instructions
8	**RK11-1978**	Checkball and spring kit for turbines

For water detection kits and manifold conversion kits - see the marine accessories section.

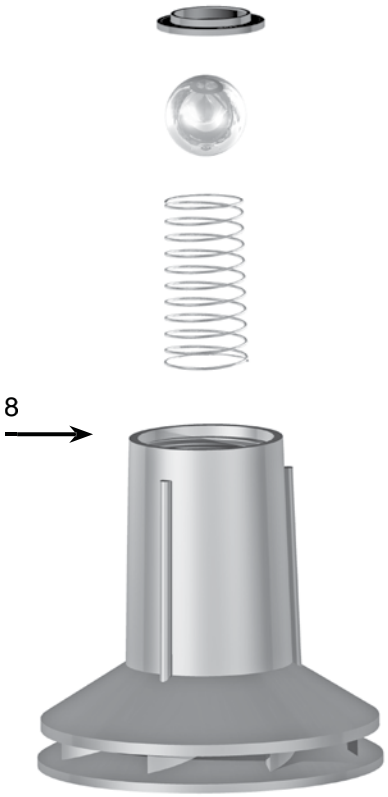

791000MAV
Certifications

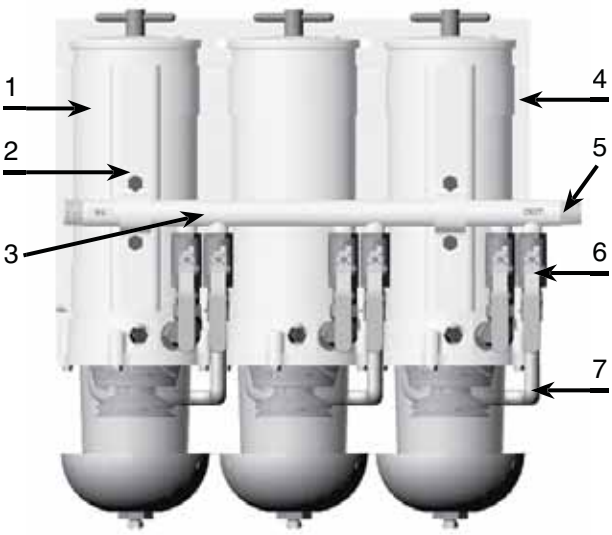

Questions? Contact Technical Support:
800 344 3286 or 209 521 7860 ext. 7555
e-mail: racortech@parker.com

How to Order

(Test results are from controlled laboratory testing, field results may vary.)

500MA 500MAM

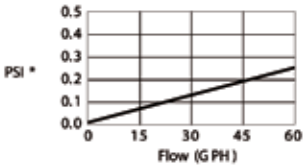

SAE J905 Fuel Flow Restriction

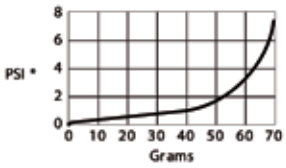

SAE J 905 Solids Capacity
(using SOFT C–2A; 2010TM Element)

900MA 900MAM

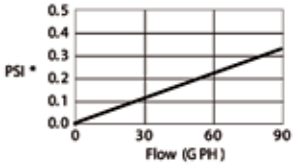

SAE J 905 Fuel Flow Restriction

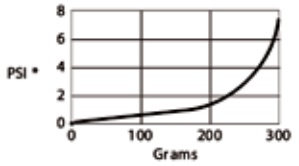

SAE J 905 Solids Capacity
(using SOFT C–2A; 2040TM Element)

1000MA 1000MAM

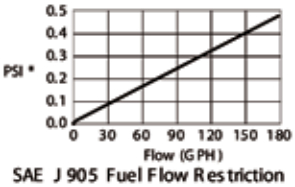

SAE J 905 Fuel Flow Restriction

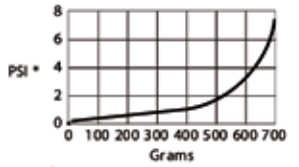

SAE J 905 Solids Capacity
(using SOFT C–2A; 2020TM Element)

731000MA

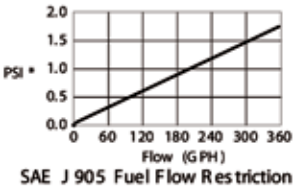

SAE J 905 Fuel Flow Restriction

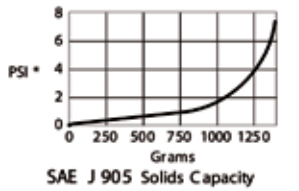

SAE J 905 Solids Capacity
(using SOFT C–2A; 2020TM Element)

*PSI X 2.036 = inHg. / PSI X 6.895 = kPa

Marine Turbine Series

How to Order

(Test results are from controlled laboratory testing, field results may vary.)

75500MAX

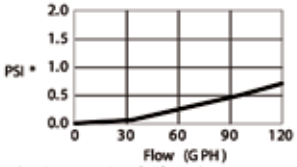

SAE J 905 Fuel Flow Restriction

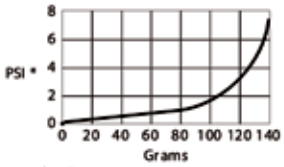

SAE J 905 Solids Capacity
(using SOFT C-2A; 2010TM Element)

75900MAX

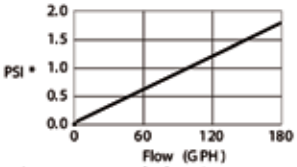

SAE J 905 Fuel Flow Restriction

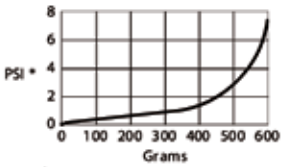

SAE J 905 Solids Capacity
(using SOFT C-2A; 2040TM Element)

751000MAX

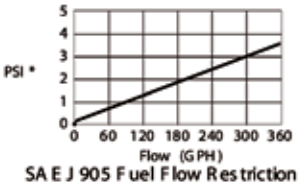

SAE J 905 Fuel Flow Restriction

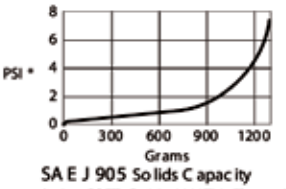

SAE J 905 Solids Capacity
(using SOFT C-2A; 2020TM Element)

771000MA

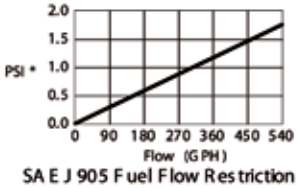

SAE J 905 Fuel Flow Restriction

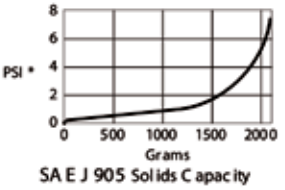

SAE J 905 Solids Capacity
(using SOFT C-2A; 2020TM Element)

791000MAV

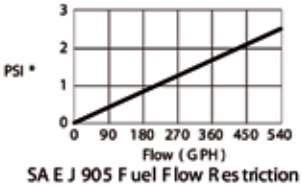

SAE J 905 Fuel Flow Restriction

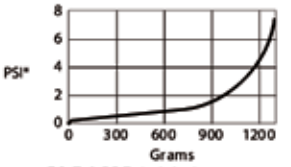

SAE J 905 Solids Capacity
(using SOFT C-2A; 2020TM Element)

*PSI X 2.036 = inHg. / PSI X 6.895 = kPa

Questions? Contact Technical Support:
800 344 3286 or 209 521 7860 ext. 7555
e-mail: racortech@parker.com

Installation Instructions

New filter installations must be filled with fuel and the fuel system must be adequately primed following the engine manufacturer's recommendations. Existing installation difficulties are usually associated with improper priming procedures or damage to the unit or fuel system. The result is either internal air suction or external fuel leakage. Diagnose with the following steps:

1. **Check fuel tank level and verify fuel delivery valves are open.**
2. **Verify T-handle, bowl fasteners and fuel fittings are tight and bowl drain is closed.**
3. **If element is new, check potential restriction at fuel tank draw tube. An in-tank strainer may be plugged.**
4. **Review other troubleshooting instructions to uncover other solutions.**

Correct external fuel leaks immediately! These conditions result in reduced engine performance such as: hard starting, stalling, reduced power and fire hazards.

Correct Application

It is very important that Turbine Series filter assemblies are not 'under specified' for the application. The maximum fuel flow rating of the filter assembly must not be exceeded; doing so will reduce efficiency and de-gas (pull air from) the fuel.

Filter Elements

Replacement elements are available in 2, 10 and 30 micron ratings (nominal). Filtration needs are based on application, fuel quality, maintenance schedules and operating climates. A simple rule to remember is... the finer the filtration, the more frequent the filter change interval.

Always carry extra replacement elements with your equipment as one tankful of excessively contaminated fuel can plug an element quickly. When clogged to maximum capacity, elements will have a brown to black color or tar like contaminants may be present - this is normal. An appearance of a multi-colored slime (which may have a foul odor) is an indication of microbiological contamination. This condition must be treated immediately. Racor offers a wide variety of gasoline and diesel additives to prevent and treat these problems; see 'Additives' section of this catalog. Severe conditions must be corrected by a repair facility.

Never operate a filter assembly without the element in place.

The element safety valve on the fuel return tube will not expose the outlet hole if the element is removed. Instead, punch the emergency tab on the top of the element and leave in place.

Warning! Puncturing the emergency tab will bypass all filtration and send unfiltered fuel to your engine. Service the element as soon as possible to avoid harmful contaminants flowing downstream to the engine.

Water Sensors

This feature alerts the operator of a high-water condition. The bowl must be drained of water at the earliest convenience.

A Racor water detection module is needed to work with the in-bowl sensor.

The unit should activate when the water reaches the sensor tips (and when they measure below 47,000 or 100,000 ohms of resistance, depending on the detection module used). If not, the tips may be fouled with a coating. Remove the sensor and clean the tips with a cloth. Run a jumper wire between the tips with the ignition ON to test the system. Difficulties usually lie in the wire connections, power source, or an independent ground.

Marine Turbine Series

All Marine Turbine Series filters are 100% tested to ensure a leak-proof, quality product.

Apply Parker Super O-lube (part number RK31605) or equivalent to all seals at major attachment points to maintain integrity, seal elasticity, to fill small voids and provide protection from degradation.

Perform the following checks with the engine OFF (and applicable valves closed). For replacement parts, refer to the appropriate 'Replacement Parts' section of this catalog.

Damaged, worn, or dirty seals will allow air ingestion. Inspect and replace all seals as needed. Lube all seals with Parker Super O-lube. Clean sealing surfaces of dirt or debris every time element is replaced.

Hand tighten T-handle; do not use tools!

If element is changed or assembly drained for any reason, repriming assembly (filling with fuel) may be necessary. Fill to just above top of element before replacing lid.

Do not overtighten carriage bolt as this may distort cylinder roundness.

Do not overtighten self-tapping screws; this may strip the treads. After disassembly, start screws by hand prior to using tools. Specification: 55 to 65 in. lbs.

The hollow aluminum check-ball floats up against the seal when the fuel is stopped thus preventing fuel bleed-back. If your unit looses prime, inspect upstream hose connections first, otherwise, disassemble the unit and inspect the seal and ball.

Drain water before it reaches this level.

Air bubbles or fuel leakage appearing from drain may indicate that drain is closed completely or that seal has been clogged with contaminants. Tighten drain and inspect: If self-venting drain will not work when opened, it may be clogged. Cycle drain (open-close) or attach a hose and briefly apply air (<2-3 PSI with T-handle and lid removed) to dislodge contaminants.

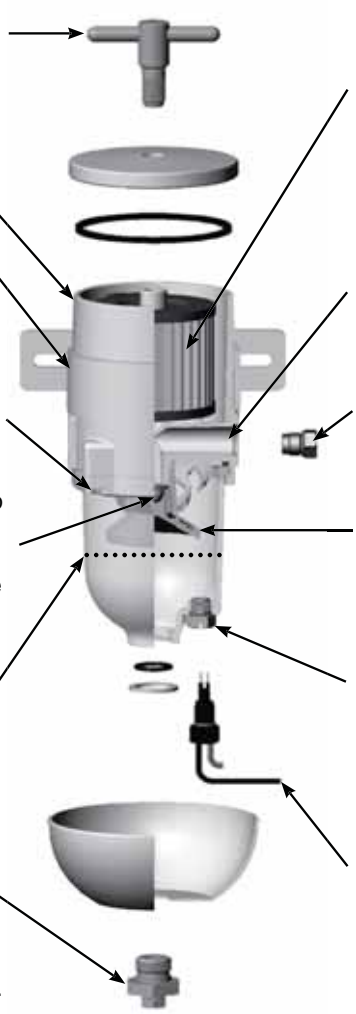

Element should be replaced every 10,000 miles every 500 hours, every other oil change, annually or at first indication of power loss, whichever occurs first. Construction and agricultural equipment should change element every 300 hours.

SAE O-ring ports should have a smooth angled seat for sealing. Do not scratch this surface. Check O-ring for damage. Replace if necessary.

Heater feed-thru O-ring must not be damaged or swollen. Tighten snugly. Specification: 15 to 20 in. lbs.

Air bubbles appearing from turbine are an indication of an upstream leak between Racor inlet and fuel tank pick-up tube.

A water sensor plug is standard equipment on new assemblies. Water sensor kits are available as accessories; see the 'Accessories' section of this catalog. Tighten plug or water sensor snugly. Specification: 15 to 20 in. lbs.

Water sensors activate when water contacts the sensor tips. Air bubbles or fuel leakage appearing from sensor area may indicate that it is loose or O-ring is damaged. Tighten or diassemble and inspect. Specification: 15 to 20 in. lbs.

Questions? Contact Technical Support:
800 344 3286 or 209 521 7860 ext. 7555
e-mail: racortech@parker.com

LG Series

Eliminate Fuel Vent Line Overflow During Refueling!

Next time you fill up, watch your fuel vent line. A typical refueling will send up to a half a gallon of fuel spilling overboard. Fuel spillage is not only expensive, it's absolutely deadly to fragile lakes, rivers and waterways. Also, USCG and other regulations prohibit the discharge of oils and violators could face civil and criminal penalties.

Installed in the fuel tank vent line, the Racor Fuel/Air Separator efficiently separates air from fuel forced into the line. Air is vented, and fuel is returned to the tank. The Fuel/Air Separator captures fuel normally discharged due to agitation and thermal expansion (up to 2.4 PSI). It also eliminates damage to expensive striping and labels and protects finishes from fuel stains.

Applies to all models.

MARINE UL LISTED

MEMBER ABYC

Specifications	LG50	LG100
Application:		
Gasoline	Yes	Yes
Diesel	No	Yes
Maximum Air Flow Rate[1]	12 CFPM (5.6 LPS)	17 CFPM (8.0 LPS)
Hose Barb Size	5/8"	5/8"
Thermal Expansion	2.4 PSI (0.17 bar)	2.4 PSI (0.17 bar)
Height	6.0 in. (15.2 cm)	9.75 in. (24.8 cm)
Diameter	1.75 in. (4.5 cm)	4.0 in. (10.2 cm)
Weight (dry)	1.2 lb (0.5 kg)	1.6 lb (0.7 kg)
Case Quantity	12	12
Operating Temperature	-40° to +255°F (-40° to +121°C)	

Notes: [1]Flow rates are in cubic feet per minute (CFPM) and liters per second (LPS).

Fuel/Air Separators

LG50

How it Works

Stage One

Venting tank fuel is diffused by the flow diverter and air is allowed to bypass the diverter. Fuel is directed back to the tank.

Stage Two

Vapor collects on the interior surfaces and coalesces. The fuel returns downward by gravity and air continues up and out of the unit.

The safety relief valve includes a floating check ball which will not permit a large in-rush of fuel to bypass. In the event of internal pressure reaching 2.4 PSI (0.17 bar), the spring will compress and open the safety seat.

Troubleshooting

Inspect the fuel system components and overboard vent annually. In the event of severe fuel tank biological or environmental contamination, the unit may be fouled and require inspection or cleaning. Also, flying insects are known to build nest in vent ports which may obstruct the escaping vapors. These situations may be evident by loss of power while underway or premature tripping of the fuel nozzle automatic shut-off during refueling.

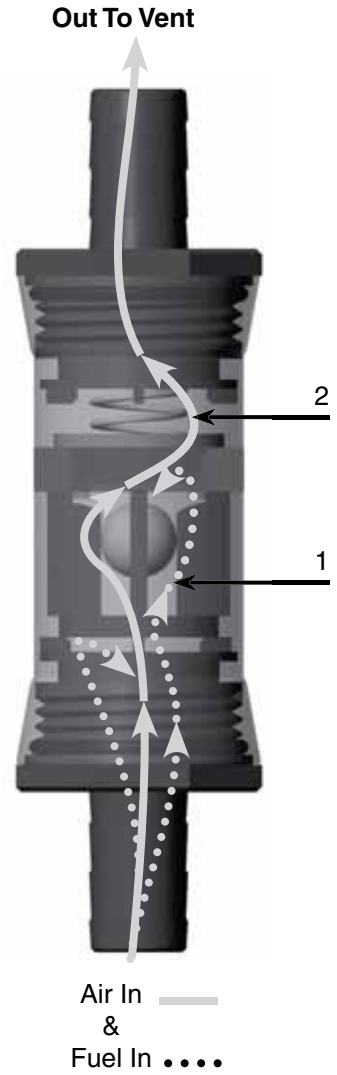

LG100

How it Works

Stage One

Venting tank fuel is deflected by the flow diverter and fuel is directed down to the drain ports. Air is allowed to bypass and continues to travel up and out.

Stage Two

Fuel defoams through a fine wire mesh screen which filters out large contaminants. Under the screen, the fuel collects temporarily until it can flow back down to the fuel tank.

Stage Three

Vapor collects on the interior surfaces and coalesces. The fuel returns downward by gravity and air continues up and out of the unit.

The safety relief valve includes a floating check ball which will not permit a large in-rush of fuel to bypass. In the event of internal pressure reaching 2.4 PSI (0.17 bar), the spring will compress and open the safety seat.

Troubleshooting

Inspect the fuel system components and overboard vent annually. In the event of servere fuel tank biological or environmental contamination, the unit may be fouled and require inspection or cleaning. Also, flying insects are known to build nest in vent ports which may obstruct the escaping vapors. These situations may be evident by loss of power while underway or premature tripping of the fuel nozzle automatic shut-off during refueling.

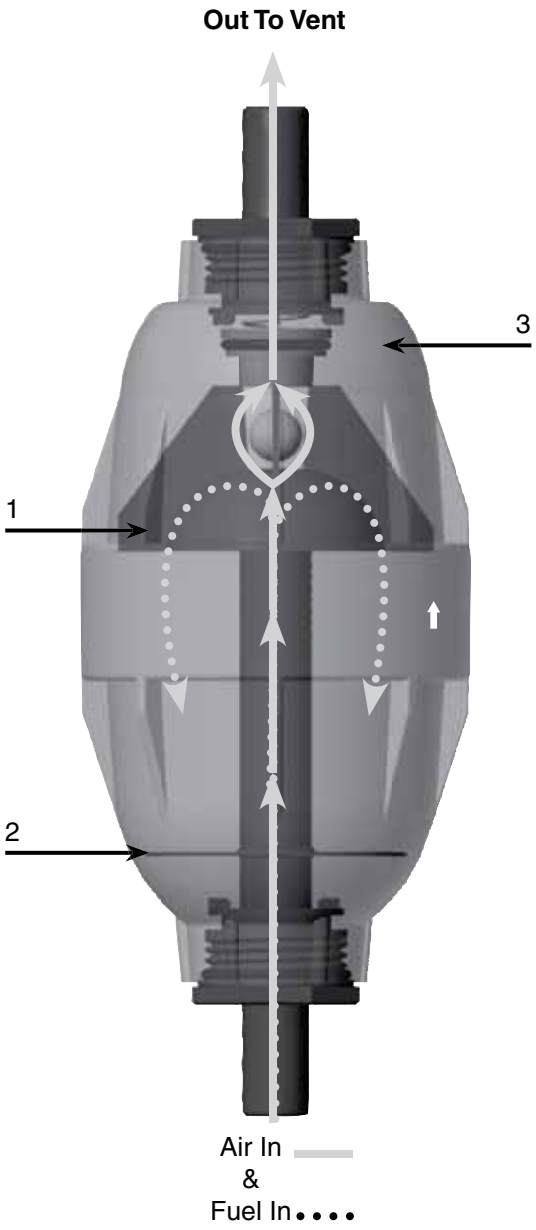

Fuel/Air Separators

LG50 Installation

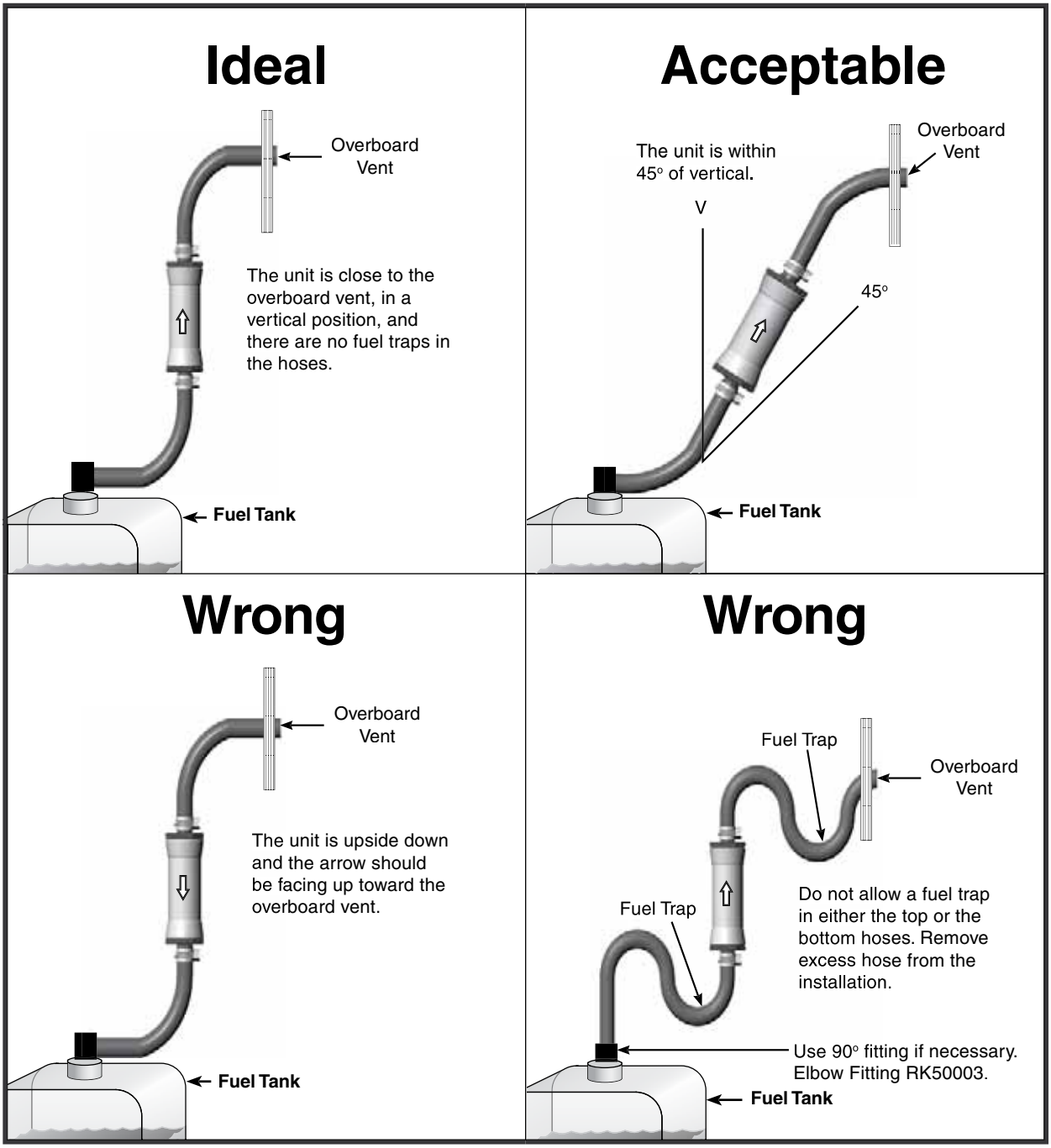

Questions? Contact Technical Support:
800 344 3286 or 209 521 7860 ext. 7555
e-mail: racortech@parker.com

LG100 Installation

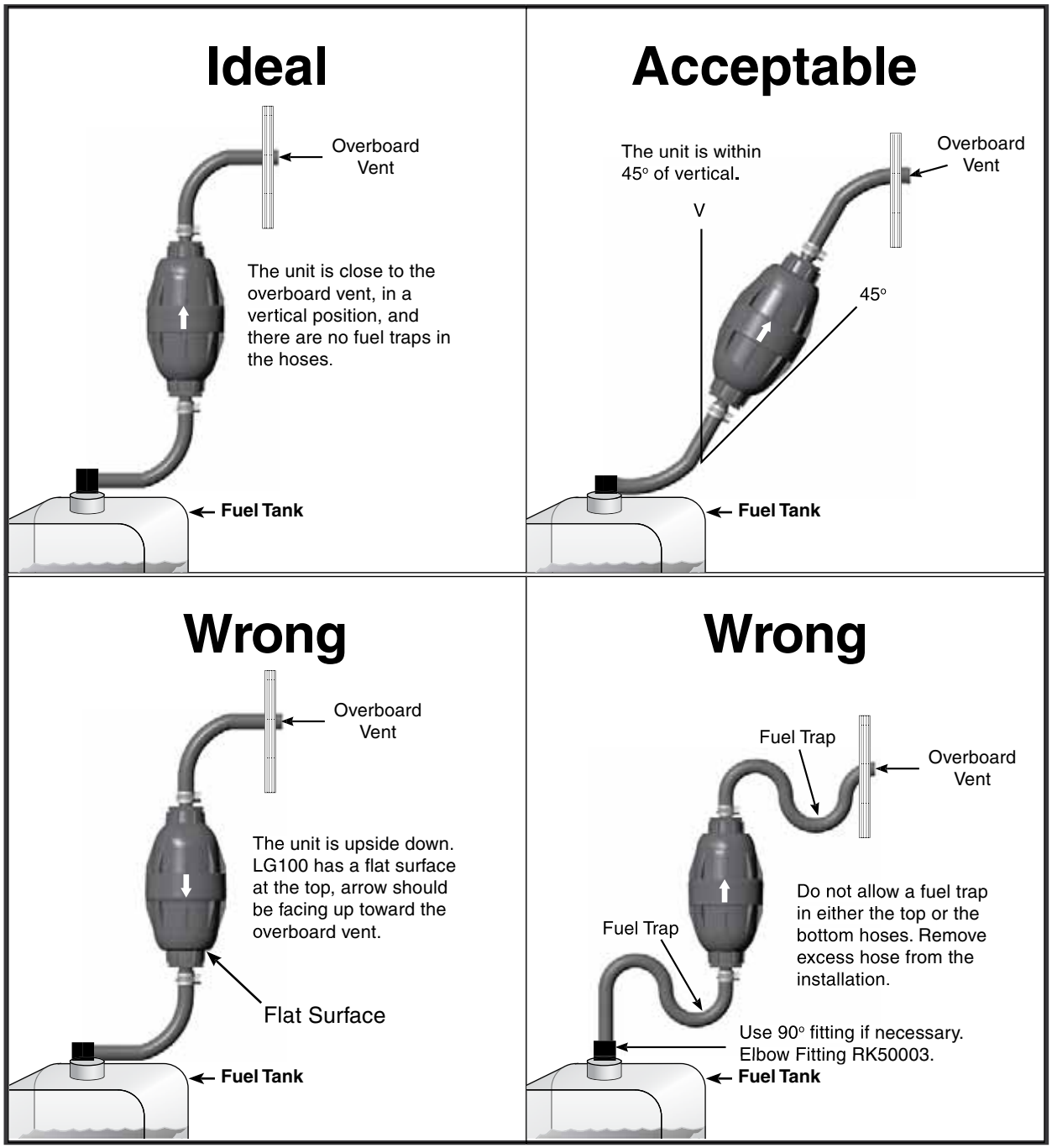

Fuel/Air Separators

Replacement Parts

LG50

	Part Number	Description
1.	**RK50007**	Spring Kit
2.	**RK50021**	Check Valve Kit
3.	**RK50009**	Check Ball Kit
4.	**RK50031**	Housing Kit
5.	**RK50052**	Flow Diverter Kit
6.	**RK50002**	Straight Hose Fitting Kit (5/8” hose barb)
7.	**RK50016**	Hose Clamp Kit
8.	**RK50033**	Straight Fitting Kit (female 1/2” NPT threads)
9.	**RK50003**	Elbow Fitting Kit (5/8” hose barb)

Additional Parts (not shown)

50017	Installation Instructions

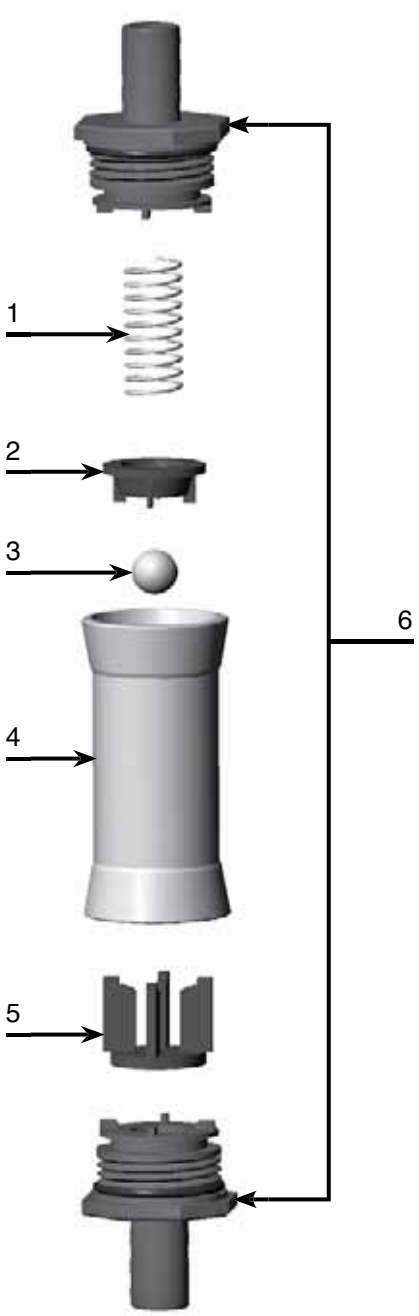

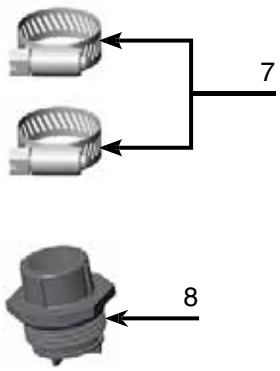

Questions? Contact Technical Support:
800 344 3286 or 209 521 7860 ext. 7555
e-mail: racortech@parker.com

Replacement Parts

LG100

	Part Number	Description
1.	**RK50007**	Spring
2.	**RK50021**	Check Valve Kit
3.	**RK50000**	Top Housing Kit (includes #8)
4.	**RK50009**	Check Ball Kit
5.	**RK50004**	Flow Diverter Kit
6.	**RK50006**	Inlet Riser Assembly Kit
7.	**RK50008**	Screen Kit
8.	**RK50014**	Square Cut Gasket
9.	**RK50001**	Bottom Housing Kit (includes #8)
10.	**RK50002**	Straight Hose Fitting Kit (5/8” hose barb)
11.	**RK50016**	Hose Clamp Kit
12.	**RK50033**	Straight Fitting Kit (female 1/2” NPT threads)
13.	**RK50003**	Elbow Fitting Kit (5/8” hose barb)

Additional Parts (not shown)

50017	Installation Instructions

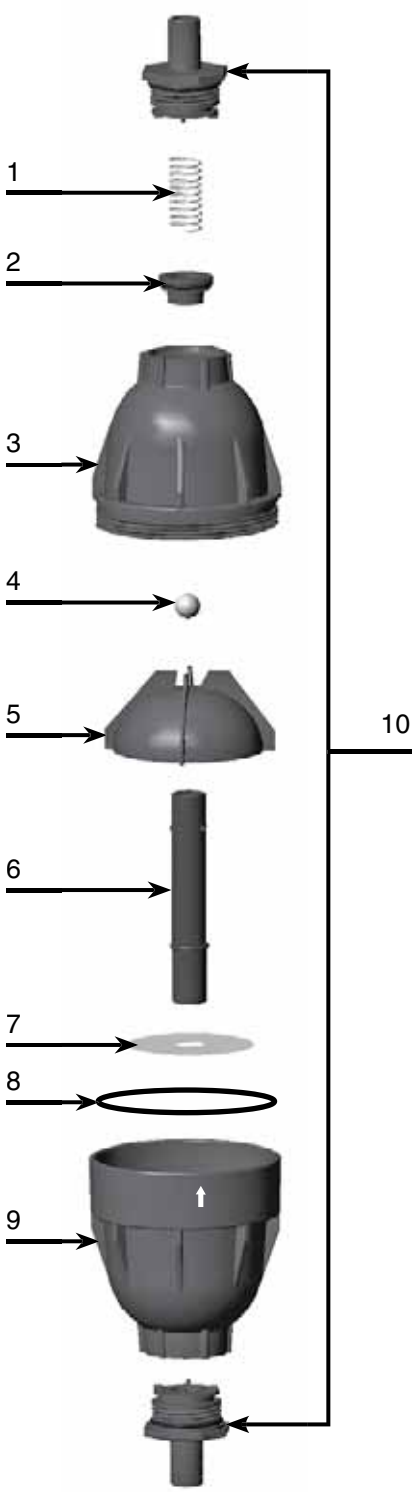

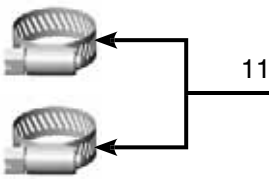

RFF Filter Funnels

RFF Filter Funnels

Racor RFF funnels include stainless steel filters that are permanently attached and designed to work with hydrocarbon fuels only. Other liquids may compromise the effectiveness of the filter. The purpose of this product is to remove solid contamination down to 0.005 inch and free water.

Free water is the collection of water molecules in the bottom of gas cans, tanks, or drums formed when fuel is stored for even short periods of time. The free water formation is due to condensation in the air and/or the separation of water molecules from fuel. Water may be present in hydrocarbon fuels as free water or as an emulsion, small droplets of water suspended in the fuel. Water may be emulsified in fuel by vibration or by emulsifying additives such as alcohol, or detergents. The RFF filter will not remove emulsified water. Install Racor fuel filter/water separators to remove emulsified water from your engine's fuel system. Always dispose of water, contaminates, or dirty fuel in a proper manner.

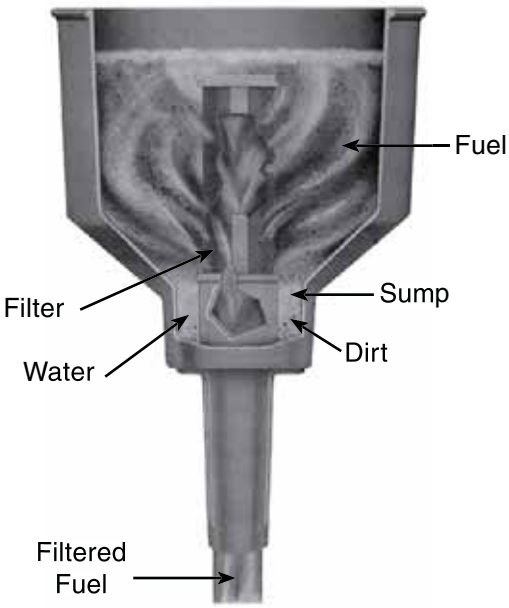

Specifications	RFF1C	RFF3C	RFF8C	RFF15C
Max. Flow Rate	2.7 GPM (10 LPM)	3.9 GPM (14 LPM)	5 GPM (19 LPM)	15 GPM (56 LPM)
Micron Rating	127 micron	127 micron	127 micron	76 micron
Height	6.0 in. (15.2 cm)	9.0 in. (22.9 cm)	10.0 in. (25.4 cm)	10.0 in. (25.4 cm)
Diameter	3.5 in. (8.9 cm)	5.5 in. (14.0 cm)	8.5 in. (21.6 cm)	8.5 in. (21.6 cm)
Weight	0.2 lb (0.09 kg)	0.3 lb (0.1 kg)	0.6 lb (0.3 kg)	1.0 lb (0.5)

Questions? Contact Technical Support:
800 344 3286 or 209 521 7860 ext. 7555
e-mail: racortech@parker.com

How to Order

(Test results are from controlled laboratory testing, field results may vary.)

T1 T2

911–O10–J10

T1 thread

T2 thread

FAMILY:
9 = Fittings

MATERIAL:
1 = Steel
3 = Stainless Steel
5 = Brass
7 = Aluminum
9 = Polymer

STYLE:
(Suction/Low Pressure use)
1 = Straight
2 = 45 degree
3 = 90 degree
4 = Banjo Bolt/Union

(Low/Medium Pressure use)
5 = Hose Straight
6 = Hose 45 degree
7 = Hose 90 degree
8 = Plug

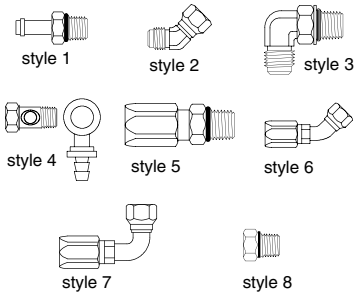

T2 FEATURE:
This end adapts to a fitting, hose or tube:
D = Drilled/Tapped NPT
H = Hose barb, male (hose I.D.)
F = NPT, female (tapered pipe thread)
N = NPT, male (tapered pipe thread)
J = J.I.C. 37o male straight thread
S = SAE 45o male straight thread
T = Tube, CPI female (Tube O.D.)

Size	J,S	D,F,N	T,H(R4)	H(R5)
4	7/16-20	1/4-18	1/4	3/16
5	1/2-20	N/A	5/16	1/4
6	9/16-18	3/8-18	3/8	5/16
8	3/4-16	1/2-14	1/2	13/32
10	7/8-14	N/A	5/8	1/2
12	1 1/16-12	3/4-14	3/4	5/8
16	1 5/16-12	1-11 1/2	1	7/8

T1 THREAD:
This is always the thread that attaches to the Racor product port fitting:
B = BSPT (British Standard Pipe Thread)
N = NPT, or NPTF (tapered pipe)
M = Metric (straight)
O = SAE O-ring (straight)
W = Swivel with JIC 37o female threads (exception for T1).

Size	O,W	B,N*	M
3	3/8-24	N/A	N/A
4	7/16-20	1/4-18	N/A
5	1/2-20	N/A	N/A
6	9/16-18	3/8-18	N/A
8	3/4-16	1/2-14	N/A
10	7/8-14	N/A	M10x1.5
12	1 1/16-12	3/4-14	N/A
14	N/A	N/A	M14x1.5
16	1 5/16-12	1-11 1/2	N/A

NOTES:
* NPT/BSPT Threads for simplicity, these similar threads are shown in the same column, but differ in the angle of the thread from (i.e. NPT= 60o BSP= 55o) and are not interchangeable

N/A = Not currently available from Racor.

Marine Fittings

Racor fittings are available in various materials, styles and sizes to fit every filter we make and most installation requirements. The previous page is a helpful guide which outlines how part numbers are structured using the new Racor Part Numbering System.

Materials: Racor fittings are made of either brass (CA360 or CA345), or plated steel (C12L14 with zinc di-chomate). When the part number is listed using the part numbering system, the second digit indicates the material, such as 91X = steel, 93X = stainless steel, and 95X = brass.

Styles: Racor products feature several porting styles to external plumbing however the most common are SAE J1926 Straight Thread O-ring & SAE J476 National Pipe Thread (see next two pages for more info).

SAE J1926 & SAE J2244 Straight Thread O-ring

These designs utilize straight threads for holding power and an O-ring for superior sealing capability. Straight thread ports permit exact positioning of elbow fittings, provide a leak free joint, eliminate distortion and cracking of boss due to over tightening and are easier to maintain. The standard Parker O-ring material is compound No. N552-90, 90 durometer Buna-Nitrile (NBR). Apply a light coating of clean fuel or Parker Super O-lube (RK31605) to the O-ring prior to installation.

SAE J476 National Pipe Thread

Many Racor fuel ports feature the National Pipe Tapered for Fuels (NPTF - also known as DrySeal Piping Thread) design for best sealing efficiency in smaller filters. The crests of the threads flatten upon tightening and allow the flanks to make contact thus sealing the joint. Use of a thread sealant, such as Parker's Unipar, is recommended to ensure a leak-proof seal. To avoid system contamination, do not apply sealant onto the first few threads.

Questions? Contact Technical Support:
800 344 3286 or 209 521 7860 ext. 7555
e-mail: racortech@parker.com

Introduction

Today many different types of connectors are being used around the world. Most of these have come about through historical use and local preference for a certain design concept. Some connections of North American origin such as SAE straight thread and 37o flare, have found some degree of acceptance and use in Europe and Japan as a result of exports of U.S. machinery to these regions after World War II. However, a large majority of usage is made up of a variety of indigenous port and fitting connections. A quick review of the commonly used connections around the world reveals eight different port configurations.

Fortunately, the International Standards Organization (ISO) Technical Committee 131 (ISO/TC131) has developed standards for the most widely used ports and connectors to limit proliferation. The result is five port designs and Racor offers the four most popular, listed below:

Standard Fuel Ports

Racor's standard port configuration is the SAE J1926 (ISO 11926-1) design for straight thread with O-ring seal. This design sandwiches and compresses an O-ring between the angular sealing surface of the female port and the shoulder of the male end.

Also available is SAE J476, Dryseal American standard taper pipe thread. Racor provides this port in the NPTF (dryseal) configuration. In this design, the male/female thread crest and roots contact and then flatten allowing the flanks to make full contact. Thread sealants are recommended with this design.

Metric Fuel Ports

Available for a European or export market is the new 'world standard' ISO6149 (SAE J2244, DIN 3852-3) metric straight thread O-ring port, which is similar in the seal design to the SAE J1926 version above.
For Germany and other applications, the ISO 9974 (DIN 3852-1) configuration is available for sealing on the port surface or 'spot-face.' In this design, a captive seal is compressed against a smooth flat radial surface on the mating part.

Parker/Racor Connector Fittings

Racor primarily offers the JIC 37o flared fitting design because it can be used to connect to inch tubing, metric tubing and hose assemblies. This versatility offers customers a greater international acceptance as compared to other fitting styles.

The standard rubber seals and O-rings used in Parker fittings are 90 durometer hard, low-swell buna-nitrile (NBR), which meets or exceeds Parker specification #N0552. This compound is suitable for use with all grades of diesel, gasoline, synthetic or petroleum based engine oils, and natural gas (CNG) applications. Typical temperature range is -30o to 225oF (-34o to 107oC). Note: not recommended for use with phosphate ester base hydraulic fluids, automotive brake fluids, strong acids, ozone, freons, ketones, halogenated hydrocarbons, and methanol.

The ports shown on the next page are the thread styles that Racor produces. The most common threads are from top-left to bottom-right.

Marine Fittings

Port & Thread Information

	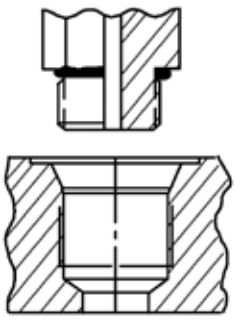	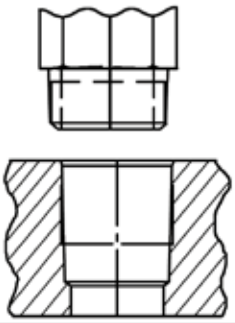	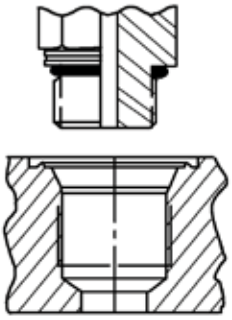
Port Description	**SAE Straight Thread O-ring Port**	**NPTF - Dryseal American Standard Taper Pipe**	**Metric Straight Thread O-ring Port**
Thread Type	ISO 263 ANSI B1.1, Unified	ANSI B1.20.3	ISO 261 Metric Fine
ISO Number	11926	N/A	6149
SAE Number	J1926	J476	J2244
DIN Number	N/A	N/A	3852-3 Form "W"
Current Use	Widely used in North America. Limited use in rest of the world.	Mainly used in North America with some use in the rest of the world.	Gaining use in U.S. and western Europe. Widely used in former Soviet block countries.

	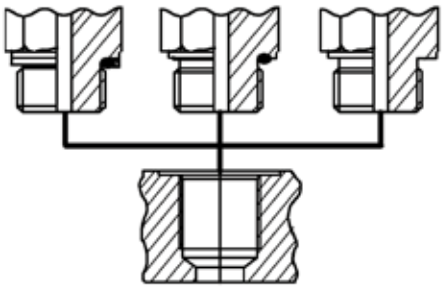	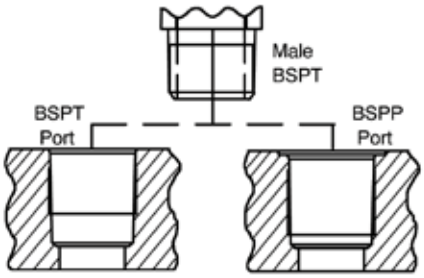
Port Description	**Metric Straight Thread Flat Face Port**	**BSPT/JIS British Standard Taper Pipe**
Thread Type	ISO 261 Metric Fine	ISO 7 BS 21 JIS B203
ISO Number	9974	N/A
SAE Number	N/A	N/A
DIN Number	3852-1 Form X or Y	Similar to: 3852-2 Form Z
Current Use	Moderate use in Europe, mainly used in Germany.	Mainly used in Japan and parts of western Europe.

Torque Specifications

SAE J1926 & J2244 Fitting Torque Specs			
SAE Dash Size	Thread Size (UN/UNF)	Assembly Torque	
		in. lbs.	ft. lbs.
3	3/8 - 24	155	13
4	7/16 - 20	205	17
5	1/2 - 20	250	21
6	9/16 - 18	300	25
8	3/4 - 16	540	45
10	7/8 - 14	N/A	85

SAE J476 National Pipe Thread	
Assembly Turns From Finger Tight (T.F.F.T.) Values for Steel and Brass Fittings	
Pipe Thread Size NPTF	T.F.F.T.
1/4 - 18	2 - 2
3/8 - 18	2 - 3
1/2 - 14	2 - 3
3/4 - 14	2 - 3
1 - 11 1/2	1.5 - 2.5

SAE / JIC 37° Male Flare Torque Specs			
SAE Dash Size	Thread Size (UN/UNF	Assembly Torque	
		in. lbs.	in. lbs.
4	7/16 - 20	N/A	N/A
6	9/16 - 18	N/A	N/A
8	3/4 - 16	550 ± 50	1
10	7/8 -14	650 ± 50	1

Marine Fittings

Marine Plugs & Fittings

Part Number	Material	T1	T2	Image
918-N4	Yellow Zinc Di-chromate	1/4”-18 NPTF	N/A	
918-N6	Yellow Zinc Di-chromate	3/8”-18 NPTF	N/A	
913-N6-H6	Plated Steel	3/8”-18 (male)	3/8” (hose barb)	
913-N4-H6	Plated Steel	1/4”-18 (male)	3/8” (hose bead)	
911-N4-H6	Plated Steel	1/4”-18 (male)	3/8” (hose barb)	
911-N6-H6	Plated Steel	3/8”-18 (male)	3/8” (hose barb)	
911-N6-H8	Plated Steel	3/8”-18 (male)	1/2” (hose barb)	

Diesel Marine Shut-off Valve Kit

Specifications	RK19492
Material	Brass
Thread: T1 T2	 1/4”-18 NPT (male) 1/4”-18 NPT (female)1
Quantity per Kit	1
1 T2 port includes 1/4”-18 NPT plug. Plug must be in valve unless servicing.	

Questions? Contact Technical Support:
800 344 3286 or 209 521 7860 ext. 7555
e-mail: racortech@parker.com

RK22936 No Spill Filler Spout

These versatile filler spouts have unlimited uses. They fit many Racor products including additives bottles and the flexible design allows users to bend the spout for flow control. This kit includes 4 hanging strips with 12 pieces on each strip; that's a total of 48 pieces per kit.

RK22628 Bowl Wrench

Racor offers a hand wrench to remove all metal and see-thru Spin-On bowls that feature external ribs. By simply fitting the wrench over the bowl ribs, the bowl can be removed from the replaceable Spin-On element, or filter housing with little effort. The wrench is made of a corrosion proof, high-impact, high-strength engineered polymer. One bowl wrench per kit.

RK31605 Parker Super O-lube

Another great product that helps with the installation of our filter assemblies and ensures a correct seal. Parker Super O-lube has a silicone base and will not harm O-rings, seals and other gaskets. Available in a 2 oz. tube which gives you plenty to go around. One 2 oz. tube per kit.

Marine Accessories

Hose Information

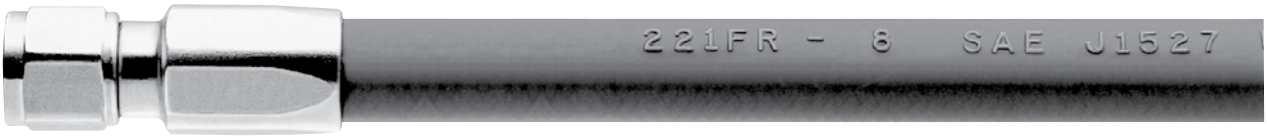

Specifications		CGH-5	CGH-6	CGH-8	CGH-10	CGH-12	CGH-16
Hose I.D.		1/4 in. (6.3 mm)	5/16 in. (8 mm)	13/32 in. (10 mm)	1/2 in. (12.5 mm)	5/8 in. (16 mm)	7/8 in. (22 mm)
Hose O.D.		0.58 in. (15 mm)	0.68 in. (17 mm)	0.77 in. (20 mm)	0.92 in. (23 mm)	1.08 in. (27 mm)	1.23 in. (31 mm)
Working Pressure		500 PSI (34.4 bar)	500 PSI (34.4 bar)	500 PSI (34.4 bar)	500 PSI (34.4 bar)	500 PSI (34.4 bar)	500 PSI (34.4 bar)
Burst Pressure		2000 PSI (137.8 bar)	2000 PSI (137.8 bar)	2000 PSI (137.8 bar)	2000 PSI (137.8 bar)	2000 PSI (137.8 bar)	2000 PSI (137.8 bar)
Minimum Bend Radius		1 in. (2.5 cm)	1 ¼ in. (3.0 cm)	1 ¾ in. (4.5 cm)	2 ¼ in. (5.5 cm)	2 ¾ in. (7.0 cm)	3 ½ in. (9.0 cm)
Weight per foot	kg	0.19 lb (0.09 kg)	0.23 lb (0.10 kg)	0.28 lb (0.13 kg)	0.39 lb (0.18 kg)	0.47 lb (0.21 kg)	0.41 lb (0.19 kg)
Inches of Mercury	InHg	20 InHg (68 kPa)	20 InHg (68 kPa)	20 InHg (68 kPa)	20 InHg (68 kPa)	20 InHg (68 kPa)	20 InHg (68 kPa)

Racor marine hose for fuel, oil, and hydraulic fluids is fire resistant and meets SAE J1527 Type A class and SAE J1942 standards. This hose delivers test-proven performance in a wide operating temperature range, constant working pressure in popular sizes, long-lasting reinforced construction, kink and cut resistance, and compatibility with a variety of standard 100R5 fittings.

Questions? Contact Technical Support:
800 344 3286 or 209 521 7860 ext. 7555
e-mail: racortech@parker.com

How to Order

CGH	-5		-50
Basic Part Number	Number	I.D. Size	Standard roll is 350 feet. (add **-50** for a 50 foot roll.)
	-5	1/4”	
	-6	5/16”	
	-8	13/32”	
	-10	1/2”	
	-12	5/8”	
	-16	7/8”	

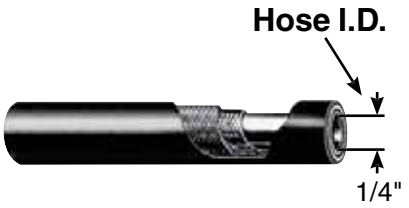

Construction:

Fuel and oil-resistant synthetic rubber tube with one braid of high-tensile steel wire, and a weather and fire resistant synthetic blue rubber cover. The layline is embossed for permanent identification.

No Skive:

1. **Assembly of No-Skive hose and fittings does not require removal of outer cover of hose. This eliminates premature hose failure caused by skiving too long or short and protects vulnerable wire wrap during fitting assembly.**
2. **Cushion grip increases hose life-supporting cushion of compressed rubber between gripping threads on fitting reduces wire movement, minimizing stress.**
3. **Corrosion protection-steel wire braid of No-Skive hose is never exposed because outer rubber cover is not removed before assembling fitting.**
4. **No-Skive fittings are designed to allow socket threads to penetrate outer cover of hose and grip the wire braid of the hose.**
5. **Simple two step assembly-attached socket to hose, thread nipple to socket.**

Hose Fittings

Part Number	Hose Size
915-W5-R5	SAE-5
915-W6-R6	SAE-6
915-W8-R8	SAE-8
915-W10-R10	SAE-10

Application and Temperature Range:

Low pressure service hose for use with gasoline, ethanol blends, diesel fuels, petroleum-base hydraulic fluids and lubricating oils within a temperature range of -4oF to 212oF (-20oC to 100oC). Water, water/glycol and water/oil emulsion hydraulic fluids up to 185oF (85oC). Meets Class 1 permeation requirements with gasoline and gasoline/ethanol blends, and passed a 2 ½ minute fire test. USCG accepted for commercial and recreational vessel applications.

Marine Accessories

Water Probe Kits

Underwriter's Laboratories Recognized Component

Specifications	RK21069	RK30880
Threads	½”-20 Threads	½”-20 Threads
Description	One piece design with two wires. Requires a detection module.	Built-in Detection Electronics. Sends a ground signal to the under-dash warning light kit (included - see below).
Voltage	12 or 24 vdc	12 or 24 vdc
Power Draw: ***(12 volt)*** ***(24 volt)***	N/A	 5 Milliamps 10 Milliamps
Maximum Load	N/A	1 Amp
Weight	0.03 lb (0.01 kg)	0.4 lb (0.2 kg)

Caution: Never wire a water probe directly to voltage or another brand of detection module.

RK30880 Part List

(individual components NOT sold separately)

1. Light Panel
2. 14GA Black Wire
3. Water Probe with Male Connector
4. Three Wire Female Connector

Questions? Contact Technical Support:
800 344 3286 or 209 521 7860 ext. 7555
e-mail: racortech@parker.com

Water Sensor Diagram

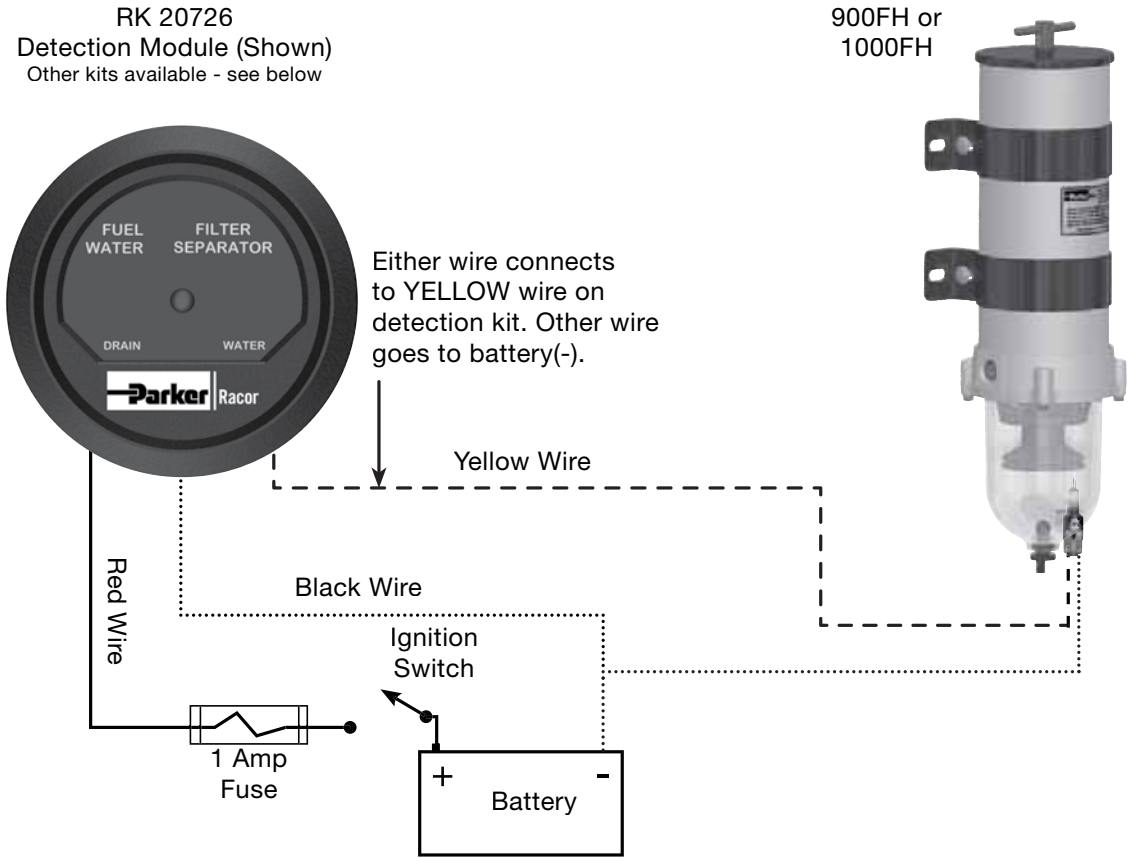

Part Number	Description	Voltage	Picture
RK 12870	Under-dash mount. Light and audio. Illuminates and sounds when water is detected. Plastic enclosure measures 1.4" square by 1.25" deep. Power draw is 1 milliamp. Probe included.	12 vdc	
RK 12871	Same as above.	24 vdc	
RK 20726	In-dash mount. Light and audio. Red 'DRAIN' lamp illuminates continuously and horn sounds momentarily when water is detected. Initial power-up self diagnosis feature and circuit protection included. Plastic 2" gauge. Power draw is 3 milliamps for 12 vdc and 13 milliamps for 24 vdc. Probe included.	12 or 24 vdc	
RK 20725	Under-dash mount. Light only. Green 'ON' lamp illuminates with power and red 'DRAIN' lamp illuminates when water is detected. Initial power-up self diagnosis feature and circuit protection included. Plastic enclosure measures 2.75" by 1.0" by 1.5". Power draw is 10 milliamps. Probe included.	12 vdc	
RK 20725-24	Same as above.	24 vdc	

Note: Detailed installation instructions supplied with each kit.

Marine Accessories

Water Detection Modules

Under-dash

Specifications	RK20725
Voltage	12 vdc
Features	Light Only
Description	Green ON lamp illuminates with power and red DRAIN lamp illuminates when water is detected. Includes initial power-up self diagnosis feature & circuit protection.
Dimensions	1.0” H x 1.5” D x 2.0 W
Power Draw	10 Milliamps
Max. Internal Load	30 Milliamps
Weight	0.4 lb (0.2 kg)

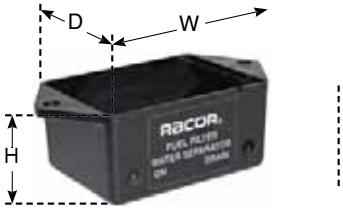

In-dash

Specifications	RK20726
Voltage	12 or 24 vdc
Features	Light & Buzzer
Description	Red DRAIN lamp illuminates continuously and buzzer sounds momentarily when water is detected. Power-up self diagnosis feature and circuit protection included.
Dimensions1	2.2” Diameter x 3.2” Depth
Power Draw: ***(12 volt)*** ***(24 volt)***	 3 Milliamps 13 Milliamps
Max. Internal Load	30 Milliamps
Weight	0.4 lb (0.2 kg)
1 Cut 2.0” diameter hole to mount gauges in instrument panel.	

Questions? Contact Technical Support:
800 344 3286 or 209 521 7860 ext. 7555
e-mail: racortech@parker.com

Vacuum Gauges

Vacuum gauges are available to monitor element condition and as the filter element slowly becomes clogged with contaminates the restriction (resistance to flow) increases. The fuel pump still tries to draw fuel (suction) but because of this restriction less fuel is delivered to the engine and instead more air is pulled from it (fuel de-gassing). These results can cause the engine to lose power and eventually stall.

By installing a vacuum gauge in your fuel system (at the outlet side of the Racor filter) visual monitoring of element condition is possible at a glance. At the first indication of decreased performance, note the dial reading or apply the 'red line' decal provided with most kits. This will assist in knowing when to change the filter at the next interval.

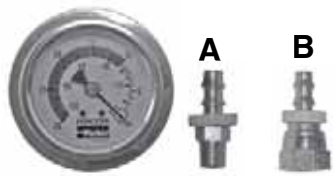

Specifications	RK11233	1606B	RK11-1676
Description	Silicone dampened, 0-30 inHg. Instrument panel installation.	**Includes gauge and two fittings (see below).** **RK11233** Vacuum Gauge. **A. 7232-4** Adapter Fitting ⅛" NPTM x #4 (¼") hose. **B. 7234-4** Adapter Fitting ¼" swivel x #4 (¼") hose. **11-1115** Instructions.	Silicone dampened, 0-30 inHg.
Threads	¼" NPT back bracket mount.	¼" NPT back bracket mount.	¼" NPT bottom boss mount.
Dimensions	2.0" W x 1.9" D	2.0" W x 1.9" D	2.0" W x 1.1" D
Dial	2 in.	2 in.	2 in.
Weight	0.4 lb (0.2 kg)	0.4 lb (0.2 kg)	0.3 lb (0.1 kg)
Special Notes: For severe vibration applications, mount the gauge on a stable, remote location and connect to the source using flexible tubing. After September 1999, Racor converted many liquid-filled gauges to new silicone dampened movement. This new (dry) technology provides a vibration resistant design that never leaks fluid or requires adjustments due to temperature or altitude variations.			

Marine Accessories

T-handle Vacuum Gauge

T-handle vacuum gauges are available to monitor element condition and as the filter element slowly becomes clogged with contaminates the restriction (resistance to flow) increases. The fuel pump still tries to draw fuel (suction) but because of this restriction less fuel is delivered to the engine and instead more air is pulled from it (fuel de-gassing). These results can cause the engine to lose power and eventually stall.

By installing a vacuum gauge in your fuel system (at the outlet side of the Racor filter) visual monitoring of element condition is possible at a glance. At the first indication of decreased performance, note the dial reading or apply the 'red line' decal provided with most kits. This will assist in knowing when to change the filter at the next interval.

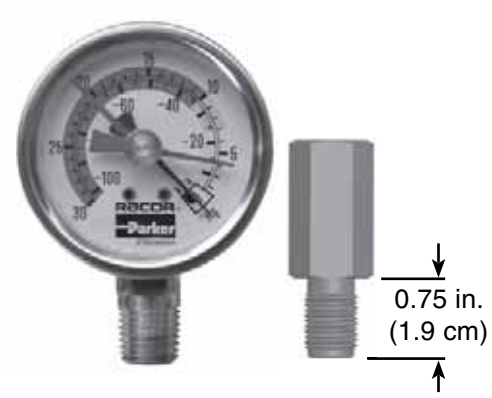

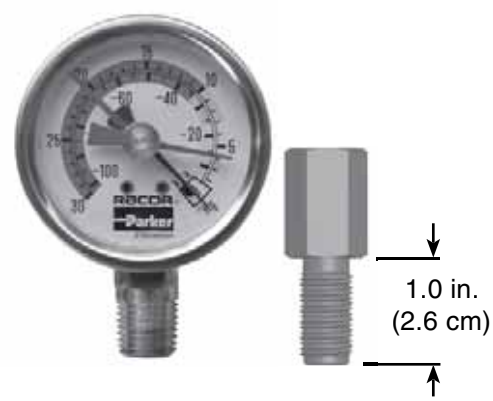

Specifications	RK11-1969	RK11-1669
Description	**500 Turbine Series*** T-handle vacuum gauge kit includes gauge & **11-1969** Fitting 9/16"-18 UNF	**900 & 1000 Turbine Series*** T-handle vacuum gauge kit includes gauge & **11-1668** Fitting, 9/16"-18 UNF
Threads	¼" NPT bottom boss mount	¼" NPT bottom boss mount
Dimensions	2.0" W x 1.1" D	2.0" W x 1.1" D
Dial	2 in. (5.1 cm)	2 in. (5.1 cm)
Weight	0.3 lb (0.1 kg)	0.3 lb (0.1 kg)

Special Notes: For severe vibration applications, mount the gauge on a stable, remote location and connect to the source using flexible tubing. After September 1999, Racor converted many liquid-filled gauges to new silicone dampened movement. This new (dry) technology provides a vibration resistant design that never leaks fluid or requires adjustments due to temperature or altitude variations.

* Not for use on 'MA' applications that are used on commercial Vessels.

Questions? Contact Technical Support:
800 344 3286 or 209 521 7860 ext. 7555
e-mail: racortech@parker.com

2-Cycle Synthetic Engine Oil

Applications

Recommended for use in outboard marine engines, motorcycles, chain saws, lawn mowers, string trimmer, and applications that require nmma and tcw3 certified 2 cycle oils.

About the Product

This superior fully synthetic 2 cycle oil has been designed to meet the strict requirements associated with 2 cycle engines. The racor superior synthetic 2 cycle oil dramatically improves engine performance by reducing friction and wear, improve fuel economy and protection against high temperature extremes associated with 2 cycle engines.

Features and Benefits

- **Protects against piston deposits and scuffing– additive components prevent the damaging buildup of these power stealing deposits.**
- **Protects against wear and corrosion– the superior synthetic formulation protects vital engine components with a tough lubricating film.**
- **Keeps spark plugs and exhaust ports clean– by using quality synthetic blends this optimizes fuel efficiency, also reducing exhaust emissions.**
- **Provides high temperature protection– formulated to provide excellent lubrication under extreme work environments.**
- **Nmma certification– meets and exceeds the lubrication performance requirements set forth by tc-w3®**

Gal. (L) of Gasoline	oz. (ml) of Oil to be Added				
	16:1	32:1	40:1	50:1	100:1
1 (3.79)	8 (237)	4 (118)	3 (95)	3 (76)	2 (38)
2 (7.57)	16(473)	8 (237)	6 (189)	5 (151)	3 (76)
3 (11.36)	24 (710)	12 (355)	10 (284)	8 (237)	4 (114)
4 (15.14)	32 (946)	16 (473)	13 (379)	11 (303)	6 (151)
5 (18.93)	40 (1183)	20 (591)	16 (473)	13 (379)	7 (189)
6 (22.71)	18 (1419)	24 (710)	19(568)	16 (454)	8 (227)

Marine Accessories

FPM-PTC-12

Programmable Timer/Controller for FPM

Benefits:

- **Easy to install enclosure can be flush - or surface - mounted**
- **Programmable timer can control common appliances to save energy and increase safety and security**
- **Customize to any schedule with up to 8 daily switching cycles**
- **Compatible with 12 VDC systems and appliances**
- **Enables unattended fuel polishing when used with a Parker Fuel Polishing Module**
- **Splash proof enclosure protects timer from harsh environments**

Specifications	FPM-PTC-12
Switch Type	single pole/single throw
Switch Current Rating	10 A at 25˚C, 16 at 40˚C
Operating Voltage	12 VDC nominal
Connections	includes 18 AWG leads
Operating Range	14˚ **F (-10˚C) to 131˚F (55˚C)**
Overall Size	3.95" diameter x 1.68" deep (including cover)
Approximate Weight	0.75 lbs
Mounting	#4 screws recommended

Questions? Contact Technical Support:
800 344 3286 or 209 521 7860 ext. 7555
e-mail: racortech@parker.com

FPM-050

Fuel Polishing Module

How it works, the advantages of daily fuel polishing

As diesel fuel warms through engine use or the daily heat of the sun, its natural capacity to absorb water increases, dissolving and dispersing a percentage of any water in the tank. When the fuel cools, this dissolved water desorbs into a bacteria harboring emulsified suspension. By flowing the fuel gently over many hours, the FPM maximizes your filter's ability to separate this difficult to remove emulsion and filter out particles.

Benefits:

- **Daily fule maintenance keeps fuel dry, promoting a bacteria-free environment & preventing contaminant build-up**
- **Reduces the need to use expensive fuel treatments and additives**
- **Patented solid state technology consumes only 150 mA, minimizing battery drain and enabling continuous fuel maintenance. Unit can be run off a small solar panel**
- **Breakthrough technology allows for fuel maintenance during engine down time and off-season storage**

Specifications	FPM-050
Filtration Rate	50 gallons per day (up to 350 gallons per week)
Power Requirements	less than 2 watt (less than 3A-hrs per day)
Internal Pressure Drop	less than 0.5 PSI
Voltage Requirements	10-16 VDC, 12 VDC nominal
Approximate Dimensions (Body) ***Approximate Dimensions (with Bracket)***	3.8" L x 2.47" H x 2.14" D 3.87" L x 4.48" H x 2.14" D
Ports (Inlet & Outlet)	$^3/_8$" NPTF, Recirculation - $^1/_4$" NPTF
Weight	less than 2 lbs.
Acceptable Fuels	diesel, biodiesel, kersone
Connections	includes 18 AWG leads

Note: Actual flow rate is system dependent
Note: Not compatible with gasoline or other flammable liquids

Questions? Contact Technical Support:
800 344 3286 or 209 521 7860 ext. 7555
e-mail: racortech@parker.com

Parker Racor

Part Number Index

0

PRODUCT	PAGE#
01SP-2S	B32
01SP-6F	B41
025-RAC	B3
025-RAC-01	B4
025-RAC-02	B4
025-RAC-05	B4
025-RAC-09	B4
025-RAC-10A	B5
025-RAC-11	B5
025-RAC-12	B5
025-RAC-13	B5

1

PRODUCT	PAGE#
10110	B24
10210	B32
10223	B20
10224	B20
11007	B64, B66
11041	B64
11072	B68, B76
11350	B48
11892	B68
11893	B76
11895	B76
11902	B76
11923	B68
14345	B24
15005	B62
15335	B62
15349	B70
15374	B62
19460	B78
19461	B78
19519	B72, B74
19523	B78
19526	B64, B66
19531	B68, B76
110007	B64
1000MA	B56, B59, B68, B74, B76, B78
1000MAM	B59
1003MA	B59
10SP-2S	B20
11-1626	B78
11-1629-01	B68
11-1632	B78
11-1632-01	B76
11-1761	B78
11-1835-01	B66
11895-02	B68, B76, B78
120-RMAM	B29, B30
120R-RAC-01	B16, B17
120R-RAC-02	B16, B17
15418-08	B62
15418-09	B62
15418-10	B62
1606B	B103

2

PRODUCT	PAGE#
20022	B20
20505	B24
20707	B22, B26
21430	B28
22099	B12
22237	B22
22313	B12, B14
22360	B36
24000	B24
2010PM-OR	B62
2010SM-OR	B62
2010TM-OR	B62

2020PMOR	B66
2020SMOR	B66
2020TMOR	B66
2040PM-OR	B64
2040SM-OR	B64
2040TM-OR	B64
215RMAM	B33, B34
22675-B	B48
230RMAM	B33, B34
245RMAM	B33, B34

3

PRODUCT	PAGE#
30076	B24
30768	B12, B14, B28
30941	B28
30288-01	B28
30308-01	B28
3120R-RAC-32	B16, B18
320R-RAC-01	B16, B17
320R-RAC-02	B16, B17

4

PRODUCT	PAGE#
4120MAM10	B38, B39
445MAM10	B38, B39
460MAM10	B38, B39
490MAM10	B38, B39
490R-RAC-01	B16, B18

5

PRODUCT	PAGE#
50017	B88, B89
500MA	B57, B61, B70
500MAM	B57
503MA	B57

6

PRODUCT	PAGE#
660R-RAC-01	B16, B18
660R-RAC-02	B16, B18

7

PRODUCT	PAGE#
72368	B55
72695	B55
72710	B55
72712	B55
72896	B55
73152	B55
73160	B55
73161	B55
71943-.25	B55
731000MA	B59, B67
731000MAM	B59
7500MAXM	B57
751000MAX	B60, B73
751000MAXM	B60
75500MAX	B56, B57, B69
75812MA	B42, B43
75900MAX	B56, B58, B71
75900MAXM	B58
771000MA	B60, B75
791000MAV	B56, B60, B77
79812MA	B42, B43

8

PRODUCT	PAGE#
812MA	B42, B43, B49

9

PRODUCT	PAGE#
900MA	B58, B63, B72
900MAM	B58
903MA	B58
911-N4-H6	B96
911-N6-H6	B96
911-N6-H8	B96
913-N4-H6	B96
913-N6-H6	B96
915-W10-R10	B99
915W5-R5	B99

9 continued

PRODUCT	PAGE#
915-W6-R6	B99
915-W8-R8	B99
918-N4	B41, B66, B96
918-N6	B14, B22, B36, B96
91-N6	B26

B

PRODUCT	PAGE#
B32013	B10
B32014	B10
B32020MAM	B10
B32021MAM	B10

C

PRODUCT	PAGE#
CGH-10	B98
CGH-12	B98
CGH-16	B98
CGH-5	B98
CGH-6	B98
CGH-8	B98

F

PRODUCT	PAGE#
FBO-10-MA	B51, B52, B55
FBO-14-MA	B51, B52, B55
FPM-050	B107
FPM-PTC-12	B106

L

PRODUCT	PAGE#
LG100	B83
LG50	B83

P

PRODUCT	PAGE#
PFF5510	B15

R

PRODUCT	PAGE#
R12PUL	B32
R12SUL	B32
R15TUL	B36
R20TUL	B36
R25TUL	B36
RFF15C	B90
RFF1C	B90
RFF3C	B90
RFF8C	B90
RK 10006	B32
RK 10012	B20, B32
RK 10063	B32
RK 10110	B32, B36, B41
RK 10117	B32
RK 10214-01	B20
RK 10222	B20
RK 10226	B32
RK 10503	B20, B32
RK 11021-02	B66
RK 11026D	B64, B66
RK 11028B	B64, B66
RK 11037A	B64, B66
RK 11073	B78
RK 11-1404	B64, B66
RK 11-1606-1	B64, B66
RK 11-1679	B64, B66
RK 11-1776-05	B66
RK 11-1777	B74
RK 11-1910	B62, B64, B66
RK 11-1933-04	B64, B66
RK 11340	B62, B64, B66
RK 11341	B62, B64, B66
RK 11542	B64, B66
RK 11734	B64, B66
RK 11734-01	B64, B66
RK 11815-102	B64, B66
RK 11868	B64, B66
RK 11888	B62, B64, B66
RK 12041	B36

RK 12870	B101
RK 12871	B101
RK 15010B	B62
RK 15013D	B62
RK 15035-01	B62
RK 15078-02	B62
RK 15081	B62
RK 15090	B62
RK 15104	B62
RK 15211	B62
RK 15279-01	B62
RK 15300	B70
RK 15301-01	B62
RK 15329	B70
RK 15378	B70
RK 15390	B70
RK 15391	B70
RK 19002-02	B64
RK 19473	B72, B74
RK 19475	B72, B74
RK 19476	B70, B72, B74
RK 19486	B72
RK 19492	B48, B62, B64, B66, B68, B70, B72, B74, B76, B78
RK 19506	B72, B74
RK 20011	B36
RK 20022	B32, B36, B41, B62, B64, B66
RK 20075	B36
RK 20180	B22
RK 20725-24	B101
RK 20742	B36
RK 21069	B55, B62, B64, B66
RK 21411	B26
RK 22061	B36, B41
RK 22244	B22, B26, B36
RK 22270	B41
RK 22368	B36
RK 22425	B41
RK 22609	B48
RK 22610	B48
RK 22682	B48
RK 30076	B14

RK 30076	B28 B41
RK 30467	B20
RK 30473-02	B14, B22, B26, B28
RK 30475	B22, B24, B26
RK 30476	B22, B24, B26
RK 30495	B41
RK 31390-05-03	B7
RK 31391	B7
RK10553	B20
RK11-1669	B104
RK11-1676	B103
RK11-1969	B104
RK11-1978	B78
RK11233	B103
RK19492	B96
RK20025-01	B36, B37
RK20046-01	B36, B37
RK20725	B101
RK20726	B101
RK21069	B100
RK22628	B97
RK22897	B49
RK22898	B49
RK22936	B97
RK30076	B12
RK30475	B12
RK30476	B12
RK30880	B100
RK31605	B97
RK50000	B89
RK50001	B89
RK50002	B88, B89
RK50003	B88, B89
RK50004	B89
RK50006	B89
RK50007	B88, B89
RK50008	B89
RK50009	B88, B89
RK50014	B89
RK50016	B88, B89
RK50021	B88, B89

R continued

PRODUCT	PAGE#
RK50031	B88
RK50033	B88, B89
RK50052	B88

S

PRODUCT	PAGE#
S2501	B7
S2502	B7
S3201TUL	B41
S3204TUL	B41
S3211TUL	B41
S3213	B12
S3214	B12
S3220UL	B14
S3221TUL	B14
S3227	B22, B24
S3228TUL	B22
S3232	B26
S3232UL	B26, B28
S3240	B20

Questions? Contact Technical Support:
800 344 3286 or 209 521 7860 ext. 7555
e-mail: racortech@parker.com

Section: C
Village Marine Tec

aerospace
climate control
electromechanical
filtration
fluid & gas handling
hydraulics
pneumatics
process control
sealing & shielding

Parker Racor

ENGINEERING YOUR SUCCESS.

Table of Contents

PW Series Commercial Water Makers C1
Part Number Index C5

Commercial PW Series

For Commercial Marine Applications

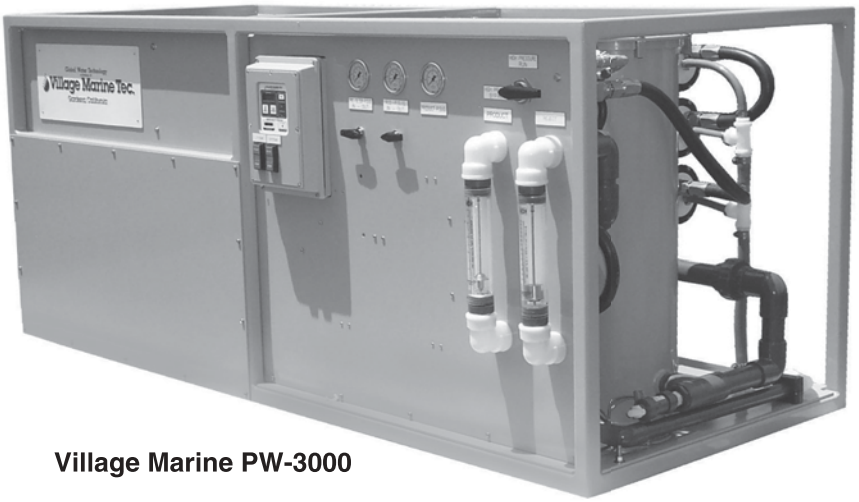

Village Marine PW-3000

The Pw Series reverse osmosis desalination systems are the preferred choice of fresh water generating equipment for the most discriminating marine operators (such as major oil companies, the United States Navy, the United States Coast Guard and the Cousteau Society). Thousands of installations have proven this series to be the most reliable on the market. They are designed to provide performance and longevity under the most rugged conditions.

Key Feature

At the core of each PW Series watermaker is the Aqua Pro® 3 or 5 plunger high pressure pump:

- **Titanium head for maximum corrosion resistance**
- **Balanced drive for lowest noise and pulsation**
- **Ceramic Plungers and nylon valves for long service life**

Aqua Pro® Pump-3P20

PW-16000 Modular

Optional modular configuration allows freedom to install components where space permits, and the modules are small enough to fit through hatchways for installation.

PW Series

Commercial Pure Water Series

Standard Features:

- Stainless Steel 316 pre-filtration housings deliver 200 sq. ft. of filtering area
- Boost pump provides up to 50 psi of boost pressure to the filtration system
- Stainless steel, glycerin filled pressure gauges accurately read pressure at filters, pump and product
- Easy to operate 316 SS high pressure bypass valve controls the operating mode from cleaning/ rinse to water production. Allows high pressure bypass for start-up and low pressure flushing without readjustment of regulating valve
- Automatic diversion valve diverts water to discharge if water quality drops below acceptable standards
- Digital water quality monitor displays ppm TDS of product water output. Also displays temperature and total hours for accurate service logs
- Simple to use freshwater flush system extends life of membranes without use of preservatives
- Optional multi-media filter for operations in turbid seas

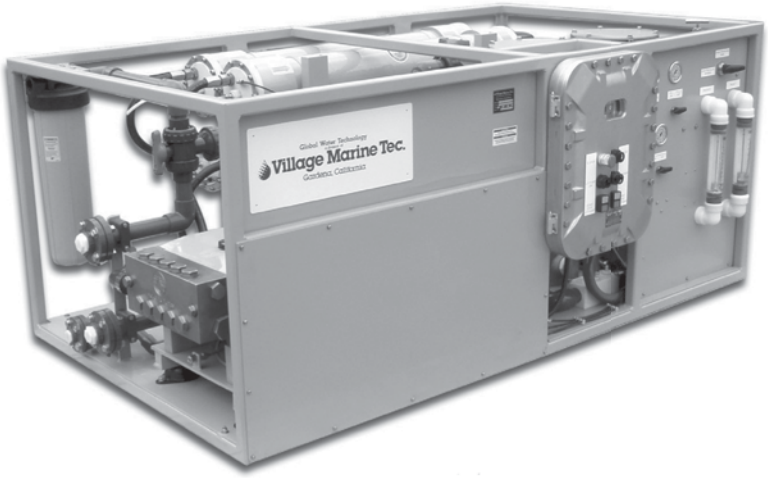

Village Marine PW-3000 Explosion Proof

Also available in explosion proof configuration for installation on oil and gas rigs. NEC rating, Class I, Division I, Group D

Model	Capacity GPH-m³/D	Power HP	Dimensions WxDxH inch (mm)	Weight lbs./kg
PW3000	125 - 11	12	84(2134)x34(864)x35(889)	800/364
PW4000	167 - 15	12	84(2134)x34(864)x35(889)	900/409
PW5000	208 - 19	17	84(2134)x34(864)x35(889)	1000/455
PW6000	250 - 23	17	84(2134)x44(1117)x35(889)	1050/477
PW7000	292 - 27	17	84(2134)x48(1219)x35(889)	1500/682
PW8000	333 - 30	22	84(2134)x48(1219)x35(889)	1600/727
PW10000	417 - 38	22	84(2134)x48(1219)x35(889)	1800/818
PW12000	500 - 45	27	88(2235)x52(1321)x35(889)	1900/864
PW16000	667 - 61	27	88(2235)x52(1321)x43(1092)	2200/1000
PW18000	750 - 68	32	88(2235)x52(1321)x43(1092)	2250/1022

Questions? Contact Technical Support:
800 344 3286 or 209 521 7860 ext. 7555
e-mail: racortech@parker.com

Pure Water Series

For Commercial Applications and Seaside Properties

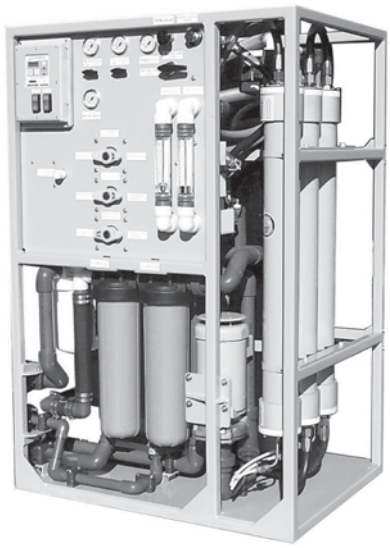

Village Marine PWV-3000-4000

The Pure Water (PW) Series is designed to provide installation flexibility, superior performance, and extended service life in the most rugged conditions. Typically used in 24/7, continuous-duty applications, the PW Series is fully operational from an optional remote control.

Standard Features:

- **Monel mesh strainer and dual sediment prefilters.**
- **Maintenance-free Air/Oil Separator allows operation while underway.**
- **3 or 5 plunger titanium pump for low vibration and noise with unsurpassed corrosion resistance. Lifetime guarantee on pump head to original owner.**
- **Magnetic drive low pressure pump provides up to 10 psi of boost pressure to the filtration system. Never requires seal replacement.**
- **316SS, Glycerin filled pressure gauges.**
- **Freshwater flush system included. Optional automation of the flush system is available.**
- **Lifetime guaranteed FRP pressure vessels, to original owner.**
- **Adjustable 316 SS pressure regulating valve allows us in fresh, brackish or seawater.**
- **Easy to operate 316 SS high pressure bypass valve controls the operating mode from cleaning/ rinse to R.O. allows high pressure bypass for start-up and low pressure flushing without readjustment of regulating valve.**
- **Automatic diversion valve diverts water to discharge if water quality drops below acceptable standards.**
- **Digital water quality monitor displays purity of product water output. Also displays temperature and total hours for accurate service log.**
- **Cleaning valve for easy cleaning or sterilization of the system including membranes.**

PW Series

Sea Water Series

For Offshore Rigs, Work Camps, Seaside Properties and Cruise Ships

The Sea Water (SW) Series reverse osmosis desalination systems are designed to provide potable water in demanding environments. Its rugged, efficient design allows high through-put of water with minimum electric power use. The Sea Water Series systems are quiet because the mounting of the motors and Aqua Pro pumps isolates and minimizes vibration transfer to the vessel's hull or the RO system enclosure. The VMT-SW32 Model is installed on a single skid with two complete, independent RO systems. The two trains can run together or can be operated on a duty/stand by basis. Top quality components, manufactured by Village Marine, provide maximum corrosion resistance. Straight-forward, easy to understand controls, result in reliable operation.

HP Pump
Approx: 8' x 2' x 2' LWH

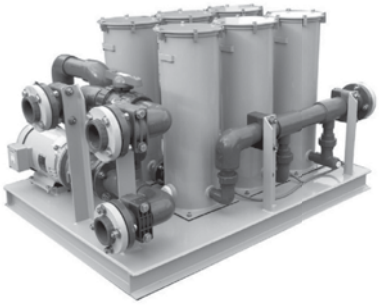

Prefilter Skid
Approx: 5' x4' x 3' LWH

Optional Media Prefiltration
Approx: 8' x4' x 8' LWH

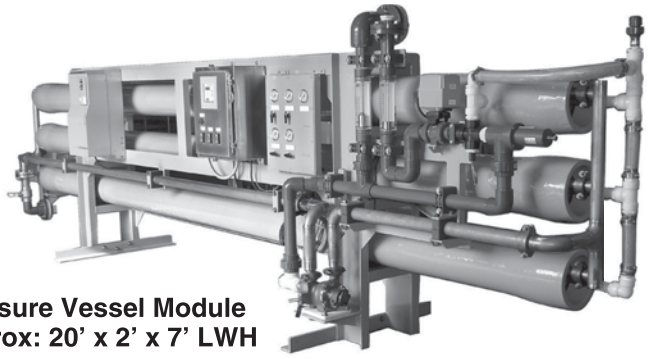

Pressure Vessel Module
Approx: 20' x 2' x 7' LWH

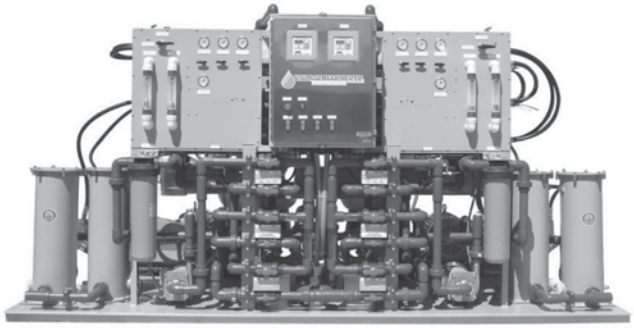

Village Marine SW-32

Questions? Contact Technical Support:
800 344 3286 or 209 521 7860 ext. 7555
e-mail: racortech@parker.com

Part Number Index

P

PRODUCT	PAG#
PUMP-3P20	C1
PW-3000	C1
PW10000	C2
PW12000	C2
PW16000	C2
PW-16000 Modular	C1
PW18000	C2
PW3000	C2
PW4000	C2
PW5000	C2
PW6000	C2
PW7000	C2
PW8000	C2
PWV-3000-4000	C3

S

PRODUCT	PAG#
SW-32	C4

Section: D
Alternative Fuel

aerospace
climate control
electromechanical
filtration
fluid & gas handling
hydraulics
pneumatics
process control
sealing & shielding

Parker Racor

ENGINEERING YOUR SUCCESS.

Table of Contents

FFC Series Alternative Fuel Filters D1
Part Number Index D13

FFC Series

FFC-110-06

FFC-110L-10

FFC-112

FFC-113-NF-01

FFC-114

FFC-116N

These assemblies are designed and tested for today's new alternative fuels: Compressed Natural Gas (CNG), Liquid Natural Gas (LNG) and Liquid Propane Gas (LPG). CNG, LNG and LPG have the same problems that plague diesel and gasoline, particulate contamination collects during handling, water condenses in tanks, and compressors leak oil into the fuel stream.

The precision components necessary for the efficient operation of an alternative fuel system demand superior filtration. Racor anticipated the need for ultra-fine filtration at the pressures required by compressed natural gas. The answer is the industry's first, most complete and most efficient line of alternative fuel filters/coalescers.

FFC series filters are designed to protect critical engine components in CNG, LNG, and LPG powered vehicles. Contaminants can be introduced into a vehicle's fuel tank when being fueled or may come from compressors and/or storage facilities. A grade 6 coalescing filter is specifically designed to remove oil, water, and solid contamination from compressed natural gas. The patented coalescing filter removes 99.97% of all aerosols in the 0.3 to 0.6 micron range.

These fuel filter/coalescer elements are produced by a patented process of arranging micro-glass fibers into a tubular form. During operation, fuel is forced through the coalescing media from the inside of a cartridge through a tubular wall to the outside, where large droplets fall to the bottom of the housing. Oily water emulsion accumulates until drained while dirt particles remain trapped and collect on surfaces of fibers.

FFC Series

FFC Series Overview

Specifications	FFC-110-06	FFC-110L-10	FFC-112	FFC-112-SAE
Fuels Used	CNG, LPG	CNG, LNG, LPG	CNG	CNG
Filter Type	Coalescer	Coalescer	Coalescer	Coalescer
Maximum Pressure	500 PSI (3,447 kPa)	500 PSI (3,447 kPa)	3,600 PSI (24,800 kPa)	3,600 PSI (24,800 kPa)
Max Flow Rate	25 SCFM (708 lpm)	50 SCFM (1,416 lpm)	15 SCFM (425 lpm)	15 SCFM (425 lpm)
Port Size	1/4” NPT	1/2” NPT	1/4” NPT	9/16”-8 SAE
Filter Element	CLS110-06	CLS110L-10	CLS112-10	CLS112-10
Length	7.9 in. (18.3 cm)	10.4 in. (26.4 cm)	4.8 in. (12.2 cm)	4.8 in. (12.2 cm)
Diameter	3.1 in. (7.9 cm)	3.1 in. (7.9 cm)	2.3 in. (5.8 cm)	2.3 in. (5.8 cm)
Weight	1.5 lbs (0.7 kgs)	1.8 lbs (0.8 kgs)	1.5 lbs (0.7 kgs)	1.5 lbs (0.7 kgs)
Clean Pressure Drop	1.0 PSI (6.9 kPa)	1.0 PSI (6.9 kPa)	3.0 PSI (20.7 kPa)	3.0 PSI (20.7 kPa)
Sump Capacity	5.0 oz. (148 cc’s)	7.0 oz. (207 cc’s)	0.5 oz. (15 cc’s)	0.5 oz. (15 cc’s)
Temperature	-40°/+225° F (-40°/+107° C)			

Notes: 1. For accurate flow rates and pressures, consult your engine manual, engine manufactures agent, or the vehicle manufacturer.
2. Some specifications are the result of tests conducted at the optimum flow rate.
3. Allow 3.0 in. (7.6 cm) of clearance below assembly for draining and maintenance of element.

Questions? Contact Technical Support:
800 344 3286 or 209 521 7860 ext. 7555
e-mail: racortech@parker.com

FFC Series Overview

Specifications	FFC-113-NF-01	FFC-114	FFC-116N
Fuels Used	CNG, LNG	CNG, LPG	CNG
Filter Type	Coalescer	Coalescer	Coalescer
Maximum Pressure	3,600 PSI (24,800 kPa)	3,600 PSI (24,800 kPa)	3,600 PSI (24,800 kPa)
Max Flow Rate	50 SCFM (1,416 lpm)	50 SCFM (1,416 lpm)	8.4 SCFM (238 lpm)
Port Size	3/4” SAE	1/2” NPT	1/4” NPT (SAE J4760)
Filter Element	CLS47133-01	CLS47133-02	CLS116-10
Length	8.0 in. (20.3 cm)	7.0 in. (17.8 cm)	3.9 in. (9.9 cm)
Diameter	3.0 in. (7.6 cm)	3.0 in. (7.6 cm)	1.8 in. (4.6 cm)
Weight	5.5 lbs (2.5 kgs)	5.3 lbs (2.3 kgs)	1.8 lbs (0.8 kgs)
Clean Pressure Drop	1.7 PSI (11.7 kPa)	1.7 PSI (11.7 kPa)	1.3 PSI (8.6 kPa)
Sump Capacity	5.0 oz. (148 cc’s)	3.0 oz. (88.0 cc’s)	0.3 oz. (7.4 cc’s)
Temperature	-40° /+225° F (-40° /+107° C)		-40° to +350°F (-40° to +177°C)

Notes: 1. For accurate flow rates and pressures, consult your engine manual, engine manufactures agent, or the vehicle manufacturer.
2. Some specifications are the result of tests conducted at the optimum flow rate.
3. Allow 3.0 in. (7.6 cm) of clearance below assembly for draining and maintenance of element.

FFC Series

Replacement Element

FFC-110-06
Basic Unit 25 SCFM (500 PSI)

Height
2.5 in.
(6.4 cm)

Diameter
1.5 in.
(3.8 cm)

CLS110-06

Mounting Information

Typical Installation Layout

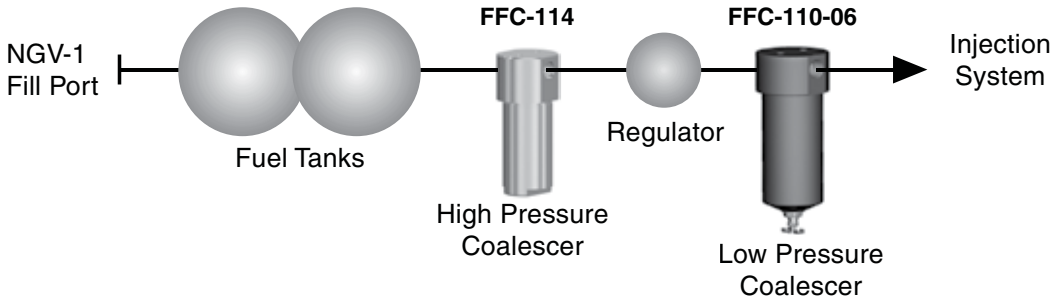

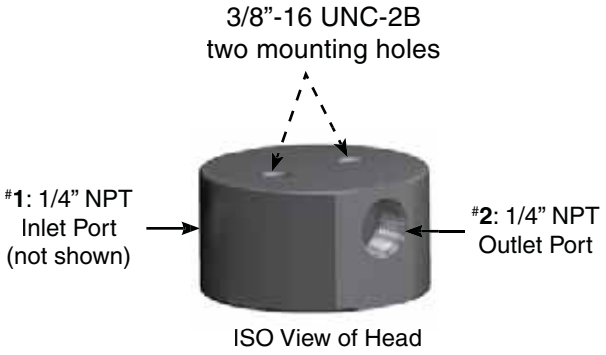

Replacement Element

FFC-110L-10
Basic Unit 25 SCFM (500 PSI)

Height
5.0 in.
(12.7 cm)

Diameter
1.5 in.
(3.8 cm)

CLS110L-10

Mounting Information

Typical Installation Layout

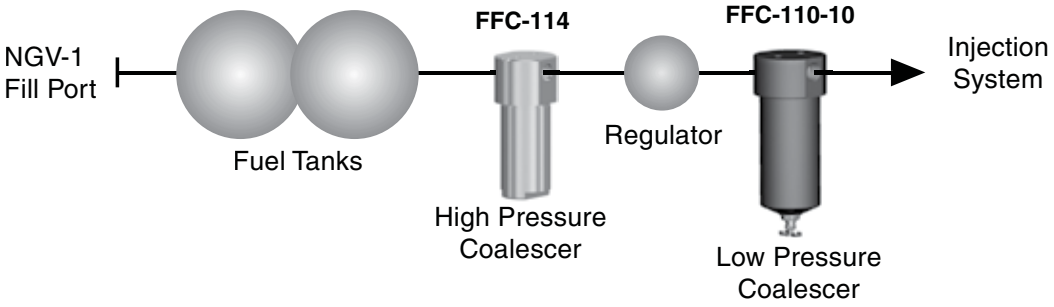

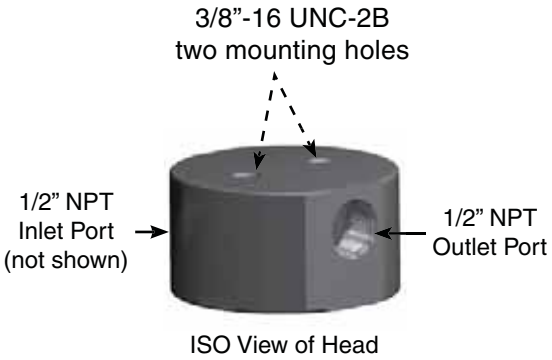

FFC Series

Customer Interface Drawing

REVISIONS					
LTR	DESCRIPTION	E. N.	DATE	DRN	CHK
-	ISSUED DRAWING	8243	012595	DG	DG
A	REMOVED THE 2X 1/4-20 SAE THREAD CALLOUT. ADDED 4X CORED FOR 10-24 X.5 THREAD CALLOUT.	9893	042297	DG	DG
B	REVISED DELINEATION TO SHOW NEW HEAD DESIGN. REVISED DIMENSIONS ACCORDINGLY. THREAD CALLOUT WAS 4X CORED FOR 10-24 X .5. MAT'L IN NOTE 5 WAS 380 DIE CAST HEAD. REDRAWN IN PRO-E FORMAT.	17145	052301	PO	DG

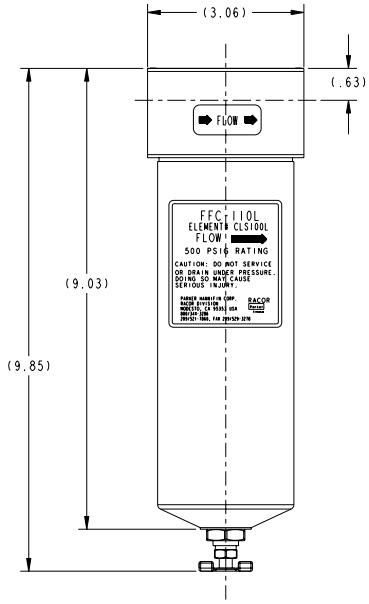

NOTES: UNLESS OTHERWISE SPECIFIED -

1. PORT SIZE: 1/2"-14 NPTF.
2. MAXIMUM PRESSURE: 500 PSI
3. RATED FLOW: 50 SCFM @ 100 PSIG
4. SUMP CAPACITY: 7.0 OZ (207 CC)
5. MATERIALS: ALUMINUM 6061 MACHINED HEAD
   ALUMINUM 6061 DRAWN BOWL
6. COATINGS: CHROMATED HEAD AND BOWL
   BLACK POWDER PAINTED EXTERIOR
7. ELEMENT GRADE AVAILABLE: 10 MICRON.

CUSTOMER INTERFACE DRAWING

QUANTITY REQD	PART NUMBER	DESCRIPTION	ITEM NO.

PARTS LIST

REVISE ONLY ON ProE SYSTEM

THIS PRINT SUPERSEDES ANY EARLIER DATE; DESTROY SAME

THIS PRINT AND ALL INFORMATION THEREIN IS OUR PROPERTY, IS CONFIDENTIAL AND MUST NOT BE MADE PUBLIC OR COPIED UNLESS AUTHORIZED BY US. THIS PRINT IS SUBJECT TO RETURN ON DEMAND.

MATERIAL: ---

FINISH: ---

		DATE
DRAWN	D. GIVA	012595
CHECK	D. GIVA	012595
DESIGN	D. GIVA	012595

UNLESS OTHERWISE SPECIFIED: DIMENSIONS ARE IN INCHES

TOLERANCES

DECIMAL .XX= ± .XXX= ±

ANGULAR ±

FRACTIONAL ±

DO NOT SCALE DRAWING

RACOR®

PARKER HANNIFIN CORPORATION
RACOR DIVISION
P.O. BOX 3208
MODESTO, CA 95353

TITLE: CNG FUEL FILTER/COALESCER

SIZE	CODE IDENT NO.	DWG. NO.	REV
C	55752	FFC-110L-CID	B

SCALE .750 RELEASE DATE 012595 SHEET 1 OF 1

FFC-110L | NEXT ASSY | FIRST USED ON | APPLICATION

Rev C | Ver 4 | Lev WIP

Questions? Contact Technical Support:
800 344 3286 or 209 521 7860 ext. 7555
e-mail: racortech@parker.com

Replacement Element

FFC-112	-SAE
Basic unit with 1/4”-18 NPTF ports. 15 SCFM (425 lpm)	Add **SAE** for 9/16”-18 SAE o-ring ports. 15 SCFM (425 lpm)

Height
3.0 in.
(7.6 cm)

Diameter
0.8 in.
(2.0 cm)

CLS112-10

Mounting Information

Typical Installation Layout

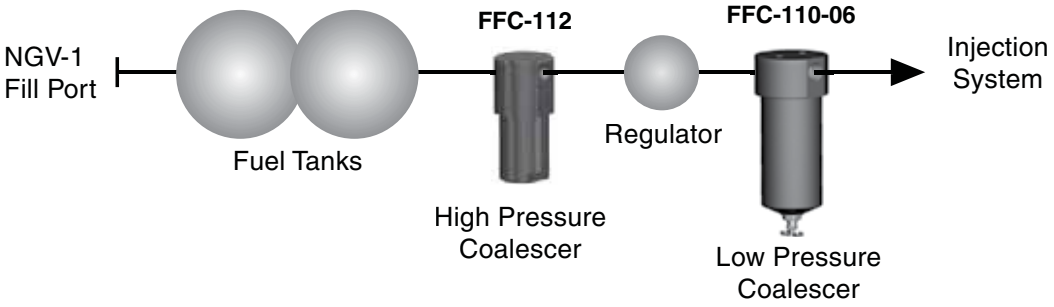

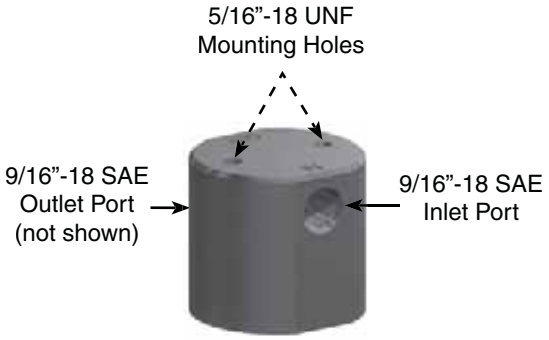

ISO View of Head

FFC Series

Customer Interface Drawing

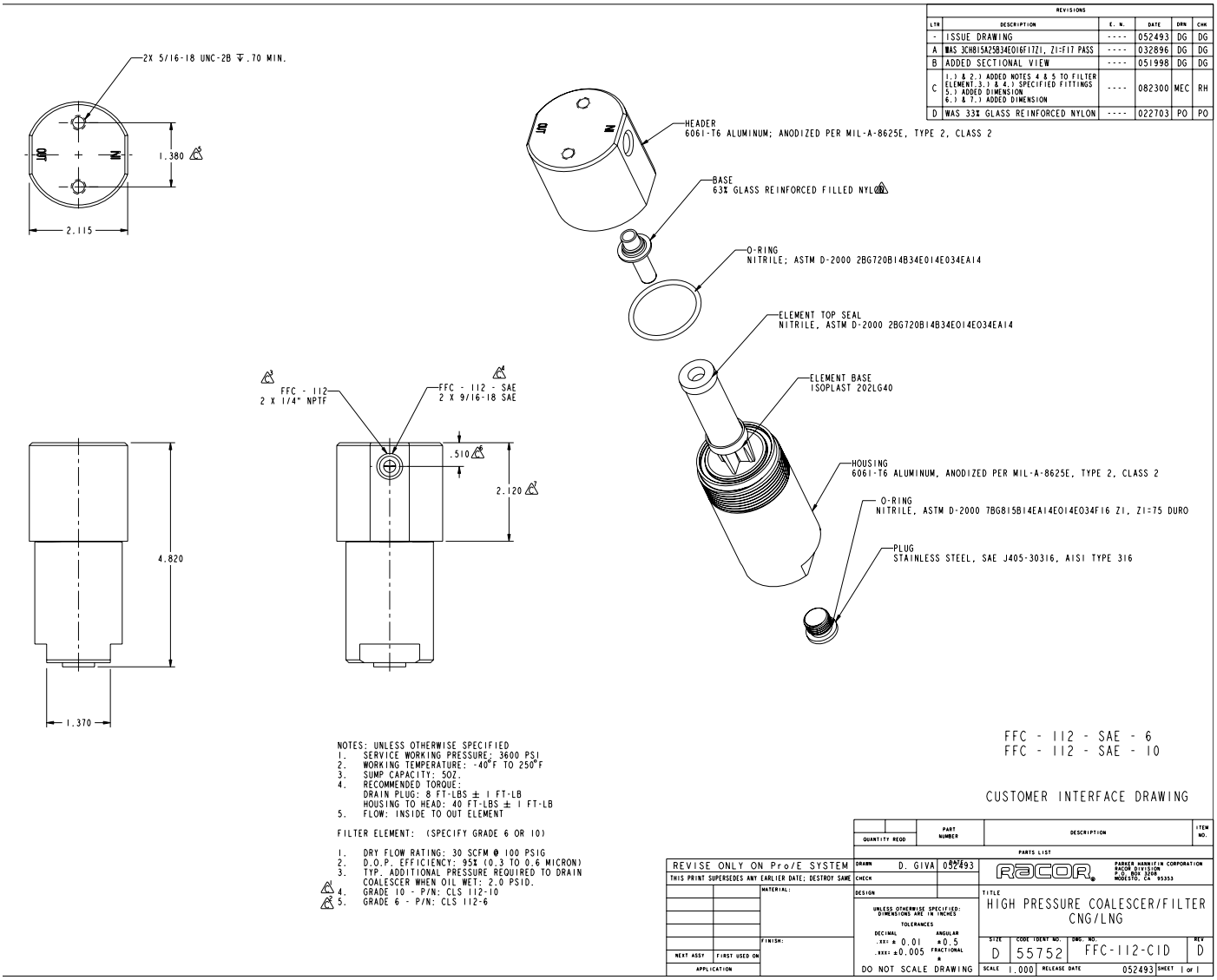

Replacement Element

FFC-113-NF-01
Basic Unit 50 SCFM (1,416 lpm)

Height
5.0 in.
(12.7 cm)

Diameter
1.5 in.
(3.8 cm)

RK47133-01

Mounting Information

Typical Installation Layout

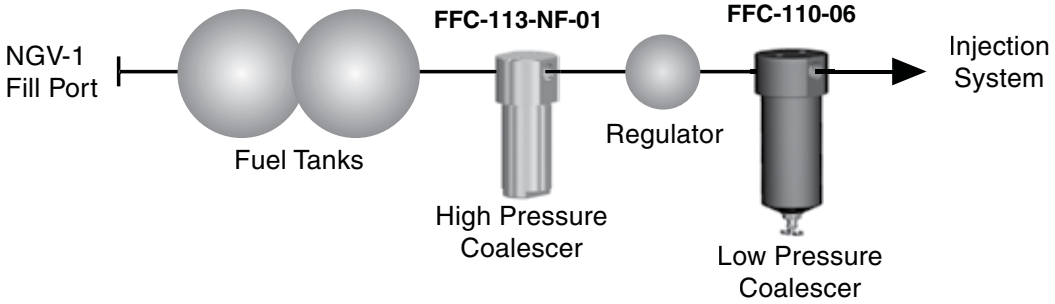

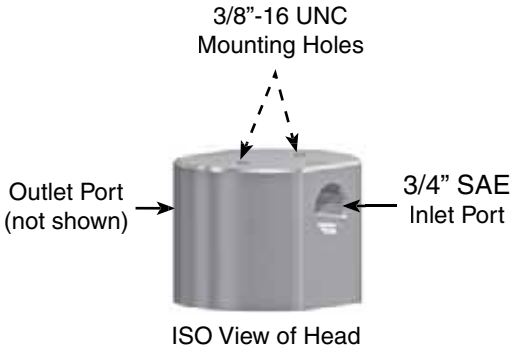

FFC Series

Replacement Element

FFC-114
Basic Unit 50 SCFM (1,416 lpm)

Height
5.0 in.
(12.7 cm)

Diameter
1.5 in.
(3.8 cm)

RK47133-02

Mounting Information

Typical Installation Layout

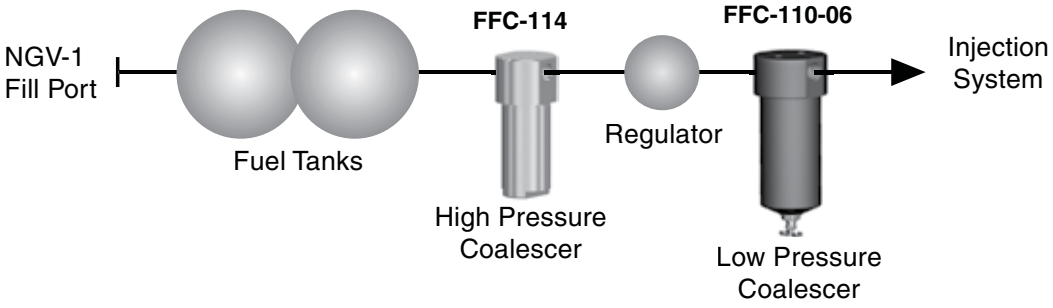

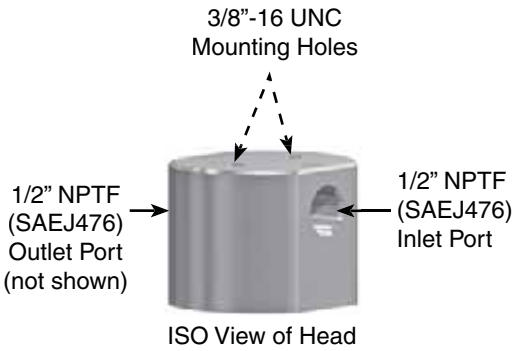

Questions? Contact Technical Support:
800 344 3286 or 209 521 7860 ext. 7555
e-mail: racortech@parker.com

Customer Interface Drawing

REVISIONS					
LTR	DESCRIPTION	E. N.	DATE	DRN	CHK
-	ISSUE DRAWING		100494	JG	WH
A	MODIFIED NOTES		101894	JG	DG
B	ADDED DIMENSION AND NOTE 8		102094	JG	DG
C	ADDED NOTE 9		102194	JG	DG
D	REFERENCE DIMENSIONS		100297	DG	DG
E	1)X-SECTIONED VIEW. 2)NOTE 8 REPL. ELEMENT WAS CLS-113. NOTE 9 CLEARANCE WAS 3" MIN. DELETED NOTE 10.	-----	100303	SPK	RH

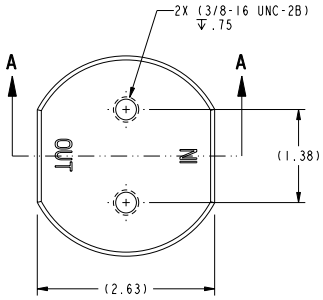

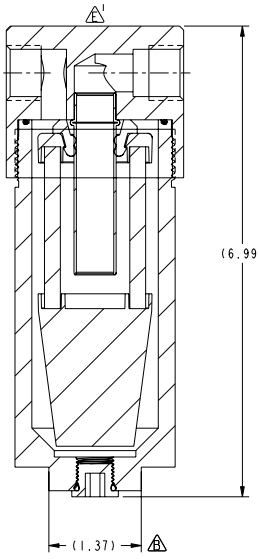

SECTION **A-A**

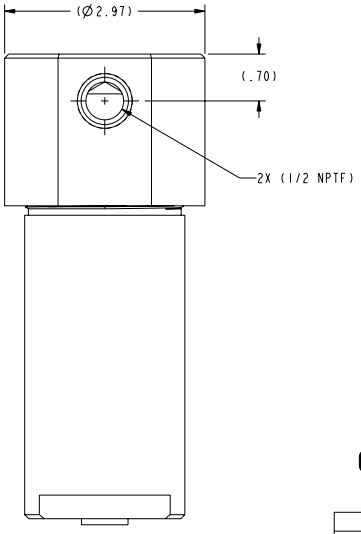

NOTES; UNLESS OTHERWISE SPECIFIED-

1. DIMENSION IN PARENTHESIS ARE FOR REFERENCE ONLY.
2. MATERIAL: 303 STAINLESS STEEL.
3. SERVICE WORKING PRESSURE: 3,600 PSI
4. WORKING TEMPERATURE: -40°F TO 250°F.
5. SUMP CAPACITY: 3OZ.
6. RECOMMENDED TORQUE:
   DRAIN PLUG: 8FT-LBS ± 1FT-LB
   BODY TO HEAD: 30FT-LBS ± 1FT-LB
7. FLOW: INSIDE TO OUTSIDE ELEMENT.
8. REPLACEMENT ELEMENT: CLS47133-02
9. ELEMENT REMOVAL CLEARANCE: 5" MIN. (E2)
10. DELETED

CUSTOMER INTERFACE DRAWING

QUANTITY REQD	PART NUMBER	DESCRIPTION	ITEM NO.

PARTS LIST

REVISE ONLY ON ProE SYSTEM

THIS PRINT SUPERSEDES ANY EARLIER DATE; DESTROY SAME

THIS PRINT AND ALL INFORMATION THEREIN IS OUR PROPERTY, IS CONFIDENTIAL AND MUST NOT BE MADE PUBLIC OR COPIED UNLESS AUTHORIZED BY US. THIS PRINT IS SUBJECT TO RETURN ON DEMAND.

		DATE
DRAWN	GULDENPFENNIG	100494
CHECK	D.GIVA	100494
DESIGN		

MATERIAL:

FINISH:

NEXT ASSY | FIRST USED ON

APPLICATION

UNLESS OTHERWISE SPECIFIED: DIMENSIONS ARE IN INCHES

TOLERANCES

DECIMAL .XX= ± .XXX= ±

ANGULAR ±

FRACTIONAL ±

DO NOT SCALE DRAWING

RACOR®

PARKER HANNIFIN CORPORATION
RACOR DIVISION
P.O. BOX 3208
MODESTO, CA 95353

TITLE

FUEL FILTER/COALESCER DDC HIGH PRESSURE

SIZE	CODE IDENT NO.	DWG. NO.	REV
C	55752	FFC-114_CID	E

SCALE 1.000 | RELEASE DATE 100494 | SHEET 1 of 1

Rev E | Ver 0 | Lev WIP

FFC Series

Replacement Element

FFC-116N
Basic Unit 8.4 SCFM (238 lpm)

Height
2.3 in.
(5.8 cm)

Diameter
0.8 in.
(2.0 cm)

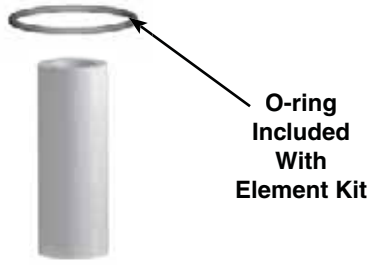

CLS116-10

Mounting Information

Typical Installation Layout

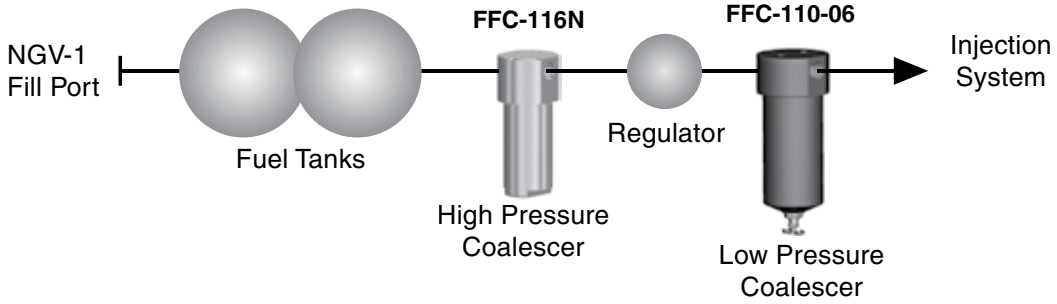

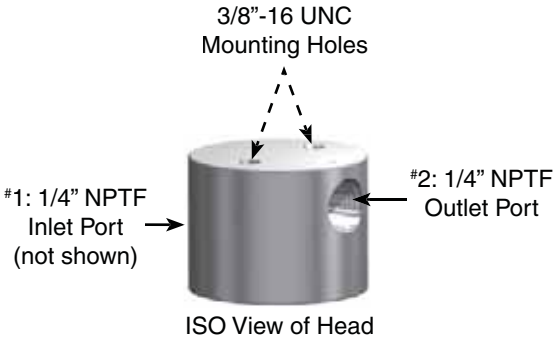

Questions? Contact Technical Support:
800 344 3286 or 209 521 7860 ext. 7555
e-mail: racortech@parker.com

Part Number Index

F

PRODUCT	PAGE#
FFC-110-06	D1, D2, D4
FFC-110L-10	D1, D2, D5
FFC-112	D1, D2, D7
FFC-112-SAE	D2
FFC-113-NF-01	D1, D3, D9
FFC-114	D1, D3, D10,
FFC-116N	D1, D3, D12

Section: E
Hydrocarbon Filtration

aerospace
climate control
electromechanical
filtration
fluid & gas handling
hydraulics
pneumatics
process control
sealing & shielding

Parker | Racor

ENGINEERING YOUR SUCCESS.

Table of Contents

FBO Assemblies Refueling Filtration E1
RHFM Series High Flow Horizontal Fuel Monitor Vessels E7
RHFS Series High Flow Horizontal Coalescer/Separator Vessels E10
RVCT Series High Flow Vertical Vessels with Clay Media E12
RVFS Series High Flow Vertical Vessels for high volume fuel delivery E15
RVMF Series High Flow Vertical Vessels with Microfilter Cartridges E29
RMO Series High Flow Elements (Monitors) E31
RST & RSS Series Separator Elements (API/IP Qualified) E33
RMI Series Monitor Elements (In to Out) E35
RAC Series Coalescer Elements (API Qualified) E37
Part Number Index E41

FBO Filter Assembly

FBO-10

FBO-14

FBO-14-HTR

Racors FBO-10 and FBO-14 filter assemblies are designed to meet the toughest hydrocarbon refueling conditions and provide for ease of filter change outs. The FBO Assembly can flow 25 gpm (95 lpm) or up to 75 gpm (230 lpm) depending on the model, the elements installed and fuel being filtered. The FBO assembly can be used on mobile refuelers or installed in refueling cabinets. The unit can also be used for diesel fuel dispensing pumps or as a primary fuel filter/water separator for large diesel engines. The assembly features a locking ring collar, which attaches the filter housing to the aluminum die-cast filter head with four bolts. The slotted locking ring collar allows maintenance personnel to hand-loosen the four collar bolts, rotate and lower the bowl assembly for element change outs. With new element installed, simply raise the bowl and rotate into position on the locking ring and hand tighten evenly. The closure hardware consists of stainless steel nuts, bolts and washers with metal hand knobs for ease of maintenance – one person can easily change the filter element. No wrenches or other special tools are required.

Applications:

- **Jet fuel, aviation gas, diesel fuel, gasoline, kerosene, JP4, JP5 and JP8.**
- **Aviation fuel trucks.**
- **Aviation fueling cabinets.**
- **Diesel fuel dispensing system.**
- **Marine fuel docks.**
- **Fuel systems on large diesel engines.**

FBO Assemblies

How to Order

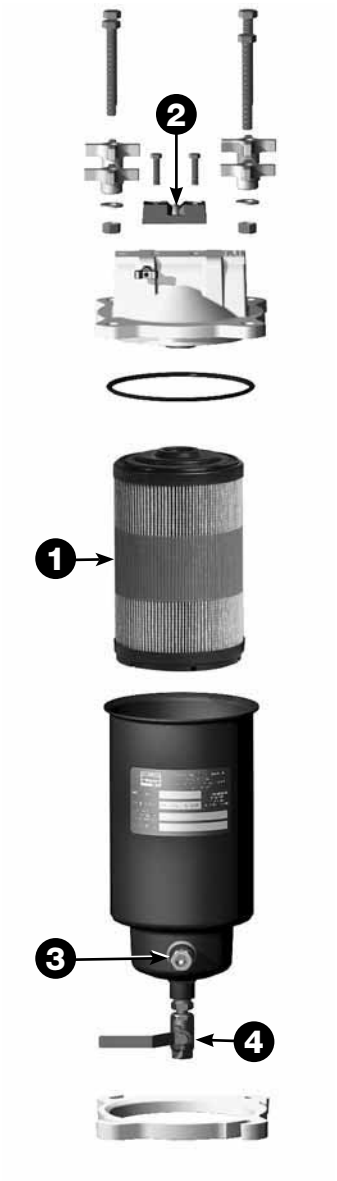

Below is a guide to help customers order the right FBO assembly with the accessories you need.

	1	2	3	4
Assembly	**Element**	**Delta P Gauge**	**Sight Glass**	**Drain Valve**
FBO-10	Order Separately			X
FBO-10-DP	Order Separately	X		X
FBO-10-DPL	Order Separately	X	X	X
FBO-10-25M	FBO-60332	X	X	X
FBO-14	Order Separately			X
FBO-14-DP	Order Separately	X		X
FBO-14-DPL	Order Separately	X	X	X
FBO-14-25M	FBO-60341	X	X	X
FBO-14-HTR	Order Separately	X	X	X

Questions? Contact Technical Support:
800 344 3286 or 209 521 7860 ext. 7555
e-mail: racortech@parker.com

FBO Assemblies

How to Order

FBO - 10 - DP

- **FBO**: Fixed Based Operation
- **10**: Flow Rates
  - 10 = 5-40 GPM (22-181 LPM)
  - 14 = 10-60 GPM (45-272 LPM)
- **DP**:
  - None =
  - DP = Deferential Gauge
  - DPL = Delta P Gauge with Liquid Sight Glass
  - MA = Marine Unit Assembly
  - 25M = Unit with 25 Micron Element
  - HTR = Unit with 120 volt Cartridge Heater

Performance

FBO-10	Flow Range	Maximum Flow Rates Diesel	Jet Fuel	Gasoline	Clean Dry Delta P	Change Delta P
Prefilter	5-40 GPM (18.9-151.4 LPM)	20 GPM (75.7 LPM)	40 GPM (151.4 LPM)	50 GPM (189.3 LPM)	Varies w/fluid and flow rate.	20 PSID
Filter Sep	5-35 GPM (18.9-132.5 LPM)	18 GPM (68.1 LPM)	35 GPM (132.5 LPM)	45 GPM (170.3 LPM)	Varies w/fluid and flow rate.	15 PSID
Absorber	5-25 GPM (18.9-94.6 LPM)	18 GPM (68.1 LPM)	35 GPM (132.5 LPM)	45 GPM (170.3 LPM)	Varies w/fluid and flow rate.	30 PSID
FBO-14	Flow Range	Diesel	Jet Fuel	Gasoline	Delta P	Delta P
Prefilter	10-60 GPM (37.9-227.1 LPM)	30 GPM (113.6 LPM)	60 GPM (227.1 LPM)	75 GPM (283.9 LPM)	Varies w/fluid and flow rate.	20 PSID
Filter Sep	10-50 GPM (37.9-189.3 LPM)	25 GPM (94.6 LPM)	50 GPM (189.3 LPM)	65 GPM (246.1 LPM)	Varies w/fluid and flow rate.	15 PSID
Absorber	10-37 GPM (37.9-140.1 LPM)	26 GPM (98.4 LPM)	55 GPM (208.2 LPM)	70 GPM (265.0 LPM)	Varies w/fluid and flow rate.	30 PSID

FBO Assemblies

FBO-10 (6x10 in. Elements)

Coalescer Separator Kit	FBO 10654C	FBO 10658C	FBO-60328-V	FBO 10668C	FBO 10678C
Weight	4.0 lbs (1.8 kg)	4.0 lbs (1.8 kg)	4.0 lbs (1.8 kg)	4.0 lbs (1.8 kg)	4.0 lbs (1.8 kg)
Micron Rating	1	5	N/A	10	25

Prefilter Kits	FBO 10602FP	FBO 10604FP	FBO 10605FP	FBO 10607FP
Weight	4.0 lbs (1.8 kg)	4.0 lbs (1.8 kg)	4.0 lbs (1.8 kg)	4.0 lbs (1.8 kg)
Micron Rating	1	5	10	25

Monitor Kits	FBO 10601FW	FBO 10605FW	FBO 10610FW	FBO 10625FW
Weight	4.0 lbs (1.8 kg)	4.0 lbs (1.8 kg)	4.0 lbs (1.8 kg)	4.0 lbs (1.8 kg)
Micron Rating	1	5	10	25

FBO-14 (6x14 in. Elements)

Coalescer Separator Kits	FBO 14654C	FBO 14658C	FBO 14668C	FBO 14678C
Weight	5.0 lbs (2.3 kg)	5.0 lbs (2.3 kg)	5.0 lbs (2.3 kg)	5.0 lbs (2.3 kg)
Micron Rating	1	5	10	25

Prefilter Kits	FBO 14501FP	FBO 14604FP	FBO 14605FP	FBO 14607FP
Weight	5.0 lbs (2.3 kg)	5.0 lbs (2.3 kg)	5.0 lbs (2.3 kg)	5.0 lbs (2.3 kg)
Micron Rating	1	5	10	25

Monitor Kits	FBO 14601FW	FBO 14605FW	FBO 1410FW	FBO 14625FW
Weight	5.0 lbs (2.3 kg)	5.0 lbs (2.3 kg)	5.0 lbs (2.3 kg)	5.0 lbs (2.3 kg)
Micron Rating	1	5	10	25

Mounting Information

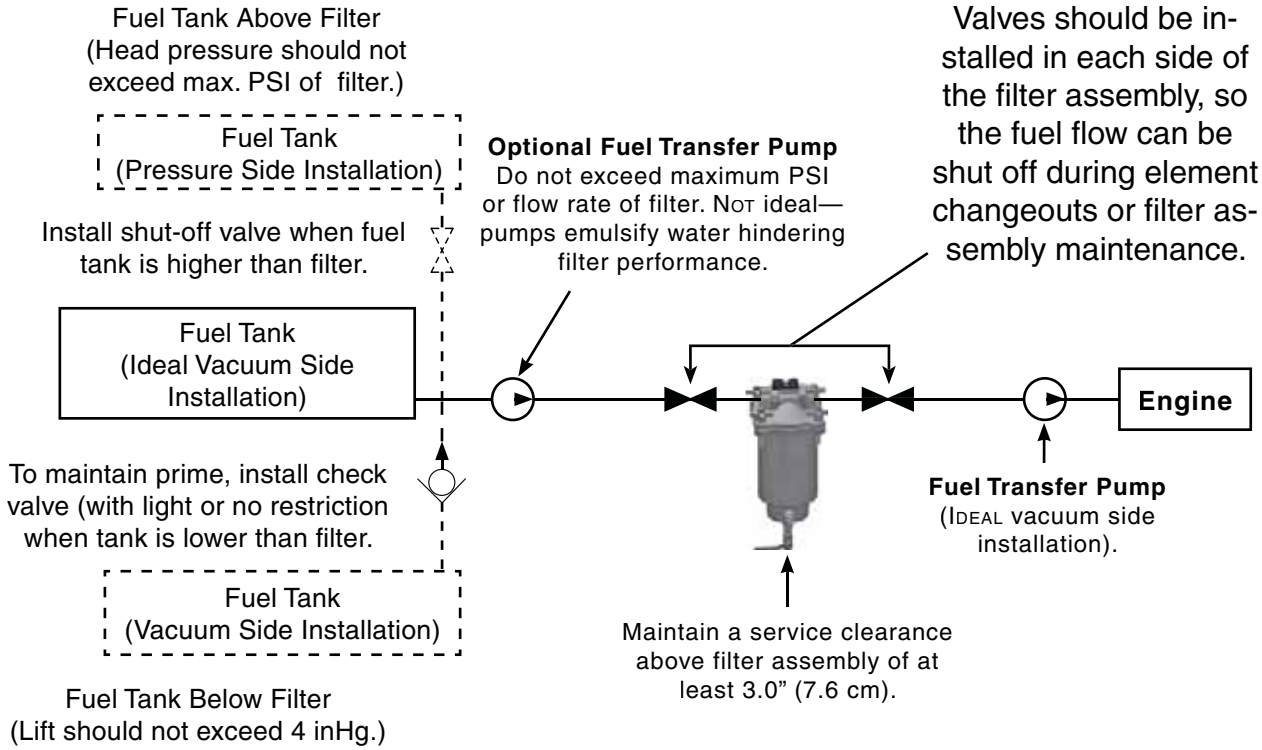

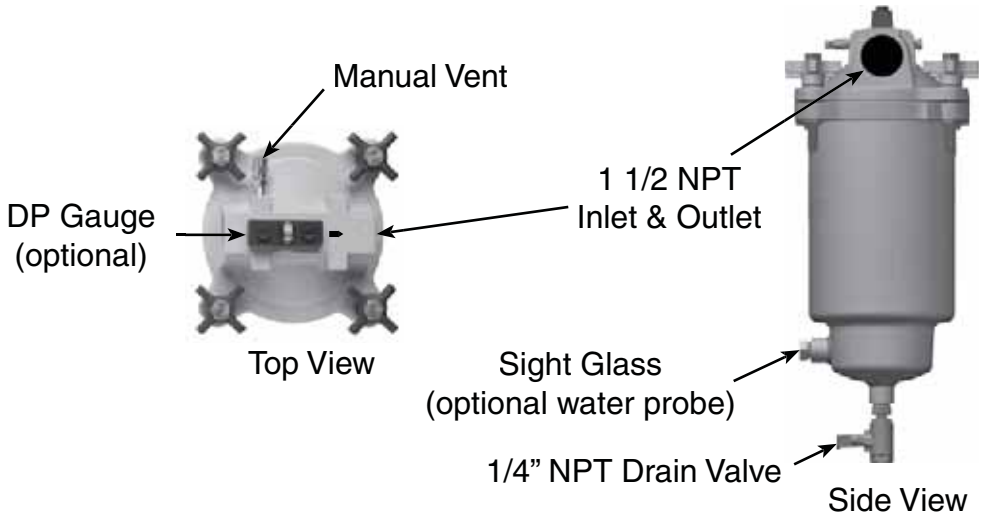

FBO Assemblies

Replacement Parts

FBO-10 and FBO-14

	Part Number	Description
1.	**72712**	Handle Assembly
2.	**Differential Pressure Gauge (DP Gauge)**	
	72694	15 PSI Gauge Kit
	72783	30 PSI Gauge Kit
3.	**FBO Head Kits**	
	72531	Head Kit with DP Gauge
4.	**72699**	O-ring
5.	**72806**	FBO-10 Housing Assembly (includes #'s 5 & 8)
	73166	FBO-14 Housing Assembly (includes #'s 5 & 8)
6.	**72710**	1/2 " NPT Sight Glass
7.	**71943-.25**	1/4 " NPT Ball Valve
8.	**72532**	Flange
	7581	Installation Instructions

Optional Parts (not shown)

73231	1/2" DIA. 120 volt Cartridge Heater

(optional) WIF Probe
RK 30880

FBO Head

Questions? Contact Technical Support:
800 344 3286 or 209 521 7860 ext. 7555
e-mail: racortech@parker.com

RHFM Series

Fuel Monitor Vessels

The RHFM Series Horizontal Fuel Monitor Vessels, equipped with the FMI or FM Series Fuel Monitor cartridges, check the entire flow of fuel, collecting solids, absorbing water and ensuring only clean and dry fuel for delivery. Racor Hydrocarbon FMI 2 Inch Series Monitor Cartridges are qualified to the latest edition of API/IP Specifications 1583 Qualification Procedures. The vessels can also be equipped with FM 2 Inch Series cartridges that are qualified to MIL-M-81380. The FMI and FM 2 Inch Series Monitor Cartridges are designed to flow from the outside to inside at a rate of one gallon (3.79 liters) per inch of length. In addition, they are not disarmed when surfactants and fuel additives are present.

Applications:

- **Jet A, Jet A1**
- **JP4, JP5, JP8**
- **Diesel Fuel**
- **Kerosene**
- **Gasoline**

Optional Accessories:

- **Automatic air eliminator**
- **Pressure relief valve**
- **Differential pressure gauge**
- **Sampling probes**
- **Manual drain valve**
- **Cover inter-lock safety device**

Connections

- **Inlet and Outlet: 150# RF (ANSI) flanged**
- **Main Drain: 3/4 inch NPT**
- **Vent and pressure relief connection: 3/4 inch NPT**
- **Differential pressure gauge connection: 1/4 inch NPT**
- **Sampling connection: 1/4 inch NPT**

Features:

- **Carbon steel construction; other material available**
- **150 psi ASME Code, Section VIII construction, stamped and certified**
- **Yellow zinc plated bolted closures**
- **Buna-N o-ring cover seal**
- **Cartridge spider assembly**
- **220 psid deckplate hydrotest**
- **Interior: epoxy-coated MIL-C-4556 E**
- **Exterior: prime coated**
- **Mult-position inlet connection and mounting saddles**
- **Patent Pending design**

RHFM-A-200

Note: Nor recommended for use in aviation fuels with FSII.

RHFM Series

How to Order

RHFM-A	-200
Basic Model	add **-200** for 200 GPM (757 LPM)

Specifications

Specifications	Flow Rate	Qty.	Element	Liquid Valume	Dry Weight
RHFM-A-200	200 GPM (757 LPM)	10	FMI-20203	7.5 gal (28 ltr)	324 lbs (147 kg)
RHFM-A-300	300 GPM (1136 LPM)	10	FMI-30203	10 gal (38 ltr)	362 lbs (164 kg)
RHFM-A-600	600 GPM (2271 LPM)	20	FMI-30203	20 gal (76 ltr)	395 lbs (179 kg)
RHFM-A-900	900 GPM (3407 LPM)	30	FMI-30203	30 gal (114 ltr)	470 lbs (213 kg)
RHFM-A-1200	1200 GPM (4542 LPM)	40	FMI-30203	40 gal (151 ltr)	503 lbs (228 kg)

Dimensions

Dimensions	A	B	C	D
RHFM-A-200	8.6 in. (21.8 cm)	39.0 in. (99.1 cm)	6.0 in. (15.2 cm)	8.0 in. (20.3 cm)
RHFM-A-300	8.6 in. (21.8 cm)	49.0 in. (124.5 cm)	6.0 in. (15.2 cm)	8.0 in. (20.3 cm)
RHFM-A-600	12.8 in. (32.5 cm)	51.0 in. (129.5 cm)	7.0 in. (17.8 cm)	10.0 in. (25.4 cm)
RHFM-A-900	14.0 in. (35.6 cm)	53.0 in. (134.6 cm)	7.0 in. (17.8 cm)	11.0 in. (27.9 cm)
RHFM-A-1200	16.0 in. (40.6 cm)	54.0 in. (137.2 cm)	7.0 in. (17.8 cm)	11.0 in (27.9 cm)

Questions? Contact Technical Support:
800 344 3286 or 209 521 7860 ext. 7555
e-mail: racortech@parker.com

Dimensions

Dimensions	E	F	G	Inlet/Outlet
RHFM-A-200	7.5 in. (19.1 cm)	13.0 in. (33.0 cm)	19.0 in. (48.3 cm)	3.0 in. (7.6 cm)
RHFM-A-300	7.5 in. (19.1 cm)	13.0 in. (33.0 cm)	29.0 in. (73.7 cm)	3.0 in. (7.6 cm)
RHFM-A-600	10.0 in. (25.4 cm)	14.0 in. (35.6 cm)	28.0 in. (71.1 cm)	4.0 in. (10.2 cm)
RHFM-A-900	10.0 in. (25.4 cm)	15.0 in. (38.1 cm)	26.0 in. (66.0 cm)	6.0 in. (15.2 cm)
RHFM-A-1200	11.0 in. (27.9 cm)	15.0 in. (38.1 cm)	26.0 in. (66.0 cm)	6.0 in. (15.2 cm)

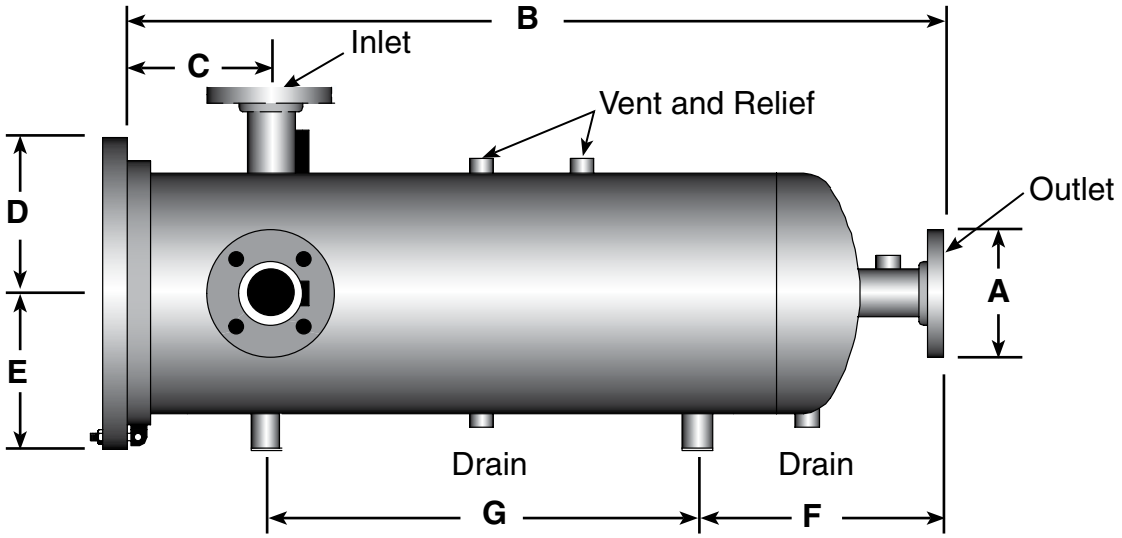

RHFS Series

API/EI (IP) 5th Edition

Horizontal Coalescer Separator Vessel

The RVFS/5 Series Filter Water Separator Vessels are for use with Racor Hydrocarbon ACP and RAC Series Coalescers and SS, ST, RSS and RST Series Separator Cartridges. Racor hydrocarbon RVFS/5 Series two-stage vertical and horizontal coalescer/separator housings are designed to filter solids and separate free water from jet fuel. Using the correct combination of Racor hydrocarbon coalescer cartridges and second stage separator cartridges will provide the highest degree of water and solids removal.

Applications

- **Jet A, Jet A1**
- **JP4, JP5, JP8**
- **Kerosene**

Installations

- **Refineries**
- **Terminals**
- **Loading racks**
- **Hydrant carts and refuelers**

Connections

- **Inlet and Outlet: 150# RF (ANSI) flanged**
- **Main Drain: NPT**
- **Vent and pressure relief connection: NPT**
- **Differential pressure gauge/sample ports: NPT**

Optional Accessories

- **Automatic air eliminator**
- **Pressure relief valve**
- **Differential pressure gauge**
- **Sampling probes**
- **Manual or automatic water drain valves**
- **Sump drain line heaters**
- **Liquid level sight glass**
- **Water slug control valve**
- **Pilot control valve**
- **Rate of flow control valve**

Questions? Contact Technical Support:
800 344 3286 or 209 521 7860 ext. 7555
e-mail: racortech@parker.com

RHFS Series

Features

- Carbon steel construction; other materials available
- ASME Code, Section VIII construction, stamped and certified
- Zinc-plated swing bolt closure
- Buna-N o-ring cover seal
- Hydraulic jack cover lift
- Inlet and outlet permanently marked
- Interior: epoxy-coated MIL-C-4556E
- Exterior: prime coated
- Knife-edge cartridge mounting seals

Specifications	Flow Rate
RHFS-5-100	100 GPM (378 LPM)
RHFS-5-200	200 GPM (757 LPM)
RHFS-5-300	300 GPM (1135 LPM)
RHFS-5-400	400 GPH (1514 LPM)
RHFS-5-600	600 GPM (2271 LPM)
RHFS-5-800	800 GPM (3028 LPM)
RHFS-5-1000	1000 GPM (3785 LPM)
RHFS-5-1200	1200 GPM (4542 LPM)
RVFS-D-50	50 GPM (189 LPM)

RVCT Series

RVCT Series

The RVCT Series Vertical Vessels are used with Racor hydrocarbon clay elements to remove additives and surfactants from jet fuel, gasoline, kerosene and diesel. Carbon elements are used for deoiling industrial water, deodorization and decolorization of hydrocarbon solvents and the removal of chlorine.

Applications:

- Jet A, Jet A1
- Diesel Fuel
- Kerosene
- Gasoline

Optional Accessories:

- Automatic air eliminator
- Pressure relief valve
- Differential pressure gauge
- Sampling probes
- Manual drain valves
- Removable bundle assembly

Connections:

- Inlet and Outlet: 150RF (ANSI) flanged
- Main Drain: 2 inch NPT
- Side Drain: 1-1/2 inch NPT
- Vent and pressure relief connections: 3/4 inch NPT
- Differential Pressure Gauge/Sample ports: 1/4 inch NPT

Features:

- Carbon steel construction; other materials available
- 150 psi ASME Code, Section VIII construction, stamped and certified
- Yellow zinc plated swing bolt closure
- Buna-N o-ring cover seal
- Hydraulic jack cover lift
- Inlet and outlet permanently marked
- Interior: epoxy-coated MIL-C-4556 E
- Exterior: prime coated

RVCT Unit

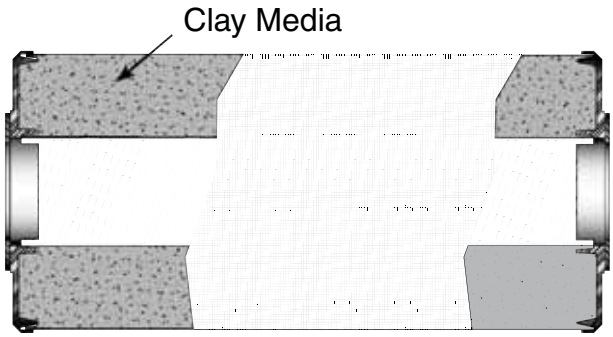

(FCC) Clay Canister

RVCT Series Overview

Model Number	Jet Fuel Flow Rate	Liquid Volume	# of Cartridges Required	Dry Weight
RVCT-300	300 GPM (1136 LPM)	250 gal (946 ltr)	45	1700 lbs (771 kg)
RVCT-500	500 GPM (1893 LPM)	450 gal (1703 ltr)	72	3300 lbs (1497 kg)
RVCT-650	650 GPM (2460 LPM)	630 gal (2385 ltr)	93	5200 lbs (2359 kg)
RVCT-850	850 GPM (3217 LPM)	850 gal (3217 ltr)	120	5200 lbs (2359 kg)
RVCT-1050	1050 GPM (3974 LPM)	1028 gal (3891 ltr)	150	6800 lbs (3084 kg)
RVCT-1250	1250 GPM (4731 LPM)	1275 gal (4826 ltr)	180	8200 lbs (3719 kg)

Model Number	Specifications		
	Inlet & Outlet	Bolt Circle	Bolt Hole
RVCT-300	4.0 in. (10.2 cm)	32.5 in. (82.6 cm)	0.8 in. (1.9 cm)
RVCT-500	4.0 in. (10.2 cm)	38.5 in. (97.8 cm)	0.9 in. (2.2 cm)
RVCT-650	6.0 in. (15.2 cm)	44.3 in. (113.0 cm)	1.13 in. (2.9 cm)
RVCT-850	6.0 in. (15.2 cm)	50.0 in. (127.0 cm)	1.13 in. (2.9 cm)
RVCT-1050	8.0 in. (20.3 cm)	56.0 in. (142.2 cm)	1.13 in. (2.9 cm)
RVCT-1250	8.0 in. (20.3 cm)	60.0 in. (152.4 cm)	1.13 in. (2.9 cm)

RVCT Series

RVCT Series Overview

Model Number	Dimensions				
	A	B	C	D	E
RVCT-300	35.3 in. (10.2 cm)	126.0 in. (320.0 cm)	87.0 in. (221.0 cm)	6.0 in. (15.2 cm)	32.0 in. (81.3 cm)
RVCT-500	42.0 in. (106.7 cm)	134.0 in. (340.4 cm)	90.0 in. (228.6 cm)	6.0 in. (15.2 cm)	38.0 in. (96.5 cm)
RVCT-650	48.0 in. (121.9 cm)	141.0 in. (358.1 cm)	95.0 in. (241.3 cm)	8.0 in. (20.3 cm)	44.0 in. (111.8 cm)
RVCT-850	54.0 in. (137.2 cm)	145.0 in. (368.3 cm)	97.0 in. (246.4 cm)	8.0 in. (20.3 cm)	50.0 (127.0 cm)
RVCT-1050	60.0 in. (152.4 cm)	153.0 in. (388.8 cm)	103.0 in. (261.6 cm)	9.0 in. (22.9 cm)	56.0 in. (142.2 cm)
RVCT-1250	66.0 in. (167.6 cm)	155.0 in. (393.7 cm)	103.0 in. (261.6 cm)	9.0 in. (22.9 cm)	62.0 in. (157.5 cm)

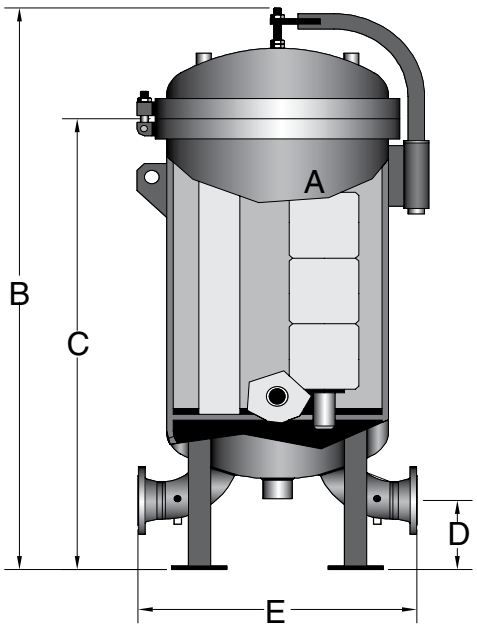

Questions? Contact Technical Support:
800 344 3286 or 209 521 7860 ext. 7555
e-mail: racortech@parker.com

RVFS Vessels

Racor RVFS Series filter vessels offer a versatile, economical alternative to any competitor's vessels. Industry applications include removing liquid and solid contaminants from diesel fuel, gasoline, kerosene, aviation gas, jet fuel and other lubricating or hydraulic oils. RVFS vessels utilize proven filter design technology and can be used as coalescers, prefilterss, monitors or separators by changing internal components or flow direction or by selecting optional filter cartridges when ordering.

Optional Accessories:

- **Automatic air eliminator**
- **Pressure relief valve**
- **Differential pressure gauge**
- **Liquid level gauge**
- **Manual or automatic water drain valves**
- **Support stand**
- **Wall mount brackets**

Applications:

- **Jet A, Jet A1**
- **JP4, JP5, JP8**
- **Diesel Fuel**
- **Kerosene**
- **Gasoline**

RVFS-1

RVFS-2

RVFS-3

RVFS Series

RVFS Series Overview

Specifications	RVFS-1	RVFS-2	RVFS-3
Max Flow Rate	50 GPM (189 LPM)	100 GPM (378 LPM)	150 GPM (567 LPM)
Inlet & Outlet Port Size NPT	2.0 in. (5.1 cm)	2.0 in. (5.1 cm)	2.0 in. (5.1 cm)
Vent & Relief Ports NPT	0.75 in. (1.9 cm)	0.75 in. (1.9 cm)	0.75 in. (1.9 cm)
Liquid Level Ports NPT	0.50 in. (1.3 cm)	0.50 in. (1.3 cm)	0.50 in. (1.3 cm)
Differential Gauge Ports NPT	0.13 in. (0.33 cm)	0.13 in. (0.33 cm)	0.13 in. (0.33 cm)
Maximum Pressure	250 PSI (17.2 bar)	250 PSI (17.2 bar)	250 PSI (17.2 bar)
Clean Pressure Drop	2 PSID (.14 bar)	2 PSID (.14 bar)	2 PSID (.14 bar)
Dirty Pressure Drop	15 PSID (1.04 bar)	15 PSID (1.04 bar)	15 PSID (1.04 bar)
Height	39.0 in. (99.1 cm)	51.0 in. (129.5 cm)	65.0 in. (165.1 cm)
Width	13.8 in. (35.1 cm)	13.8 in. (35.1 cm)	13.8 in. (35.1 cm)
Depth	13.5 in. (34.3 cm)	13.5 in. (34.3 cm)	13.5 in. (34.3 cm)
Weight dry	100 lbs (45 kg)	115 lbs (52 kg)	130 lbs (59 kg)
Service Clearance Above	16.0 in. (40.6 cm)	32.0 in. (81.3 cm)	47.0 in. (119.4 cm)
Operating Temperature	250° F (121.1° C)		

Note: Overall dimensions will vary depending on mounting leg or bulkhead method of installation.
Consult factory for flow rates.
Factory will require details of the application for proper sizing.

Questions? Contact Technical Support:
800 344 3286 or 209 521 7860 ext. 7555
e-mail: racortech@parker.com

Diesel Fuel

Element	Micron Size	RVFS-1	RVFS-2	RVFS-3
Coalescer	5	OCP-15858	OCP-30858	OCP-44858
	10	OCP-15868	OCP-30868	OCP-44868
	25	OCP-15878	OCP-30878	OCP-44878
Separator-Paper	5	SP-15404	SP-30404	SP-44404
	10	SP-15405	SP-30405	SP-44405
	25	SP-15407	SP-30407	SP-44407
Prefilter-Cellulose	2	FP-14602	FP-30602	FP-44602
	5	FP-14604	FP-30604	FP-44604
	10	FP-14605	FP-30605	FP-44605
	25	FP-14607	FP-30607	FP-44607
Prefilter-Synthetic	5	FS-14604	FS-30404	FS-44604
H_2O Absorbing	5	(1) FW-61405	(2) FW-61405	(3) FW-61405
	10	(1) FW-61410	(2) FW-61410	(3) FW-61410
	25	(1) FW-61425	(2) FW-61425	(3) FW-61425

Aviation Fuel

Element	Micron Size	RVFS-1	RVFS-2	RVFS-3
Coalescer	1/2	OCP-15832	OCP-30832	OCP-44832
	1	OCP-15854	OCP-30854	OCP-44854
	2	OCP-15855	OCP30855	OCP-44855
Separator-Synthetic	N/A	SS-15401	SS-30401	SS-44401
Separator-Cellulose	N/A	ST-15401	ST-30401	ST-44401
	1	FP-14601	FP-30601	FP-44601
	2	FP-14602	FP-30602	FP-44602
	5	FP-14604	FP-30604	FP44604
Prefilters-Synthetic	1	FS-14601	FS-30601	FS-44601
	5	FS-14604	FS-30604	FS-44604
H_2O Absorbing	1	FW-61401	FW-61401	FW-60401
	5	FW-61405	FW-61405	FW-61405
Clay Canisters	N/A	N/A	(1) FCC-18701	(2) FCC-18701

RVFS Series

Mounting Options

The RVFS has two filter mounting possibilities, one being a bulkhead mounting bracket that is adjustable, and the other is three mounting legs with holes drilled for stabilization.

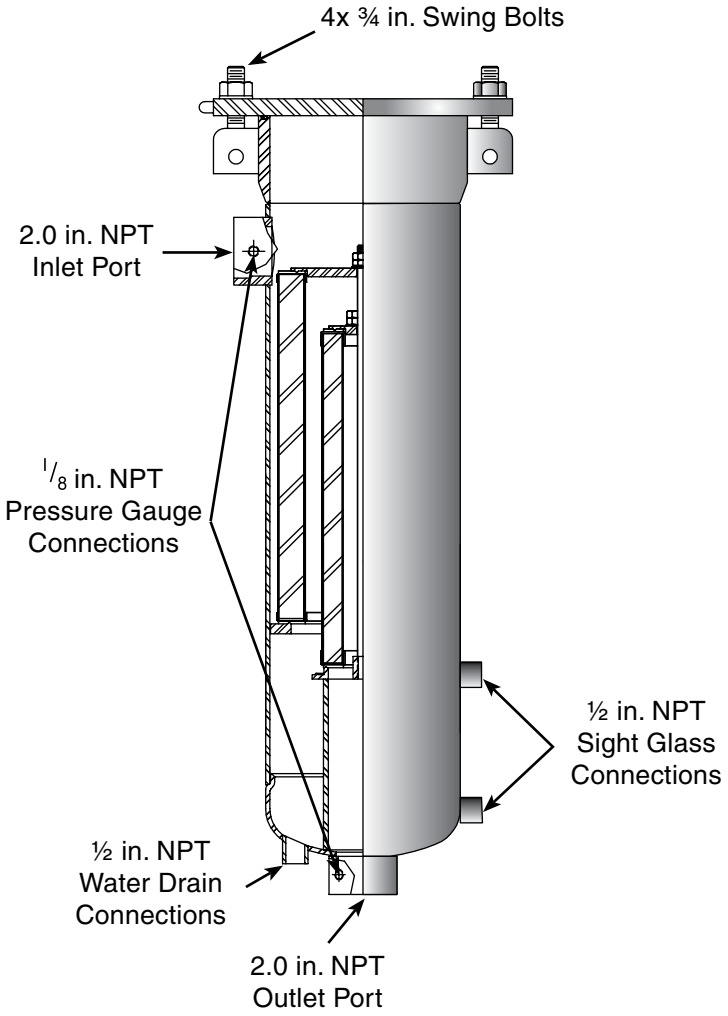

Bottom View

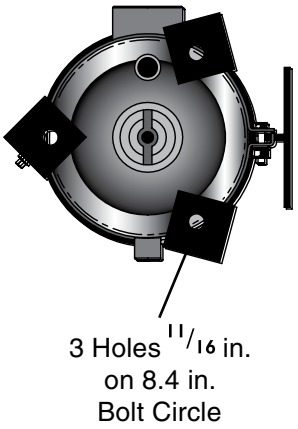

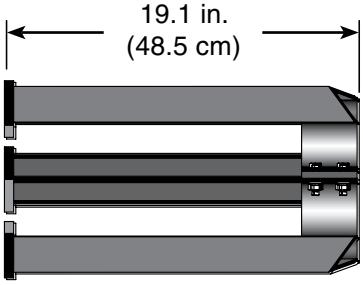

Mounting Legs

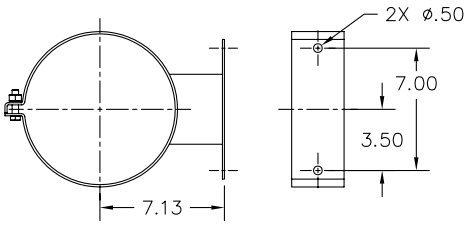

Bulkhead Mounting Bracket

Replacement Parts

RVFS-1, RVFS-2, RVFS-3

	Part Number	Description
1.	**See Replacement Element Chart**	
2.	**Unit Bodies**	
	RVFS-1	
	RVFS-2	
	RVFS-3	
3.	**Mounting Bracket**	
	71982	Bulkhead Mounting Bracket
	71981	Adjustable Mounting Legs

Additional Parts (not shown)

72059	Differential Pressure Gauge
71679	Stainless Auto Air Eliminator
71943-.75	Brass Manual Air Vent
72060-.75	Stainless Manual Air Vent
71330-.125	Pressure Relief Valve 125 PSI
72482	Stainless Check Valve
70906	Brass Water Sight Glass 125 PSI
72061	Stainless Water Sight Glass 300 PSI
RK 30880	Water Probe Kit 12 vdc
71166	Auto Drain Valve
71943-.5	Brass Manual Drain Valve
72060-.5	Stainless Manual Drain Valve
7563	Installation Instructions

RVFS Series

Safety Precautions

The following precautions are recommended for the safety of the operating personnel:

1. **The fluid being filtered is volatile. No smoking is permitted in the area where the system pumps, storage tanks and filtering equipment are located.**
2. **Any fluid spill must be cleaned up immediately. Dispose of all contaminated cleaning materials in a fire-safe container.**
3. **Any clothing contaminated with fluid must be removed immediately and disposed of in a fire-safe container.**
4. **Fluid resistant gloves must be worn when handling parts that have been in contact with the fluid.**
5. **When servicing the filtering equipment, allow for maximum ventilation to disperse fumes. An air mask may be worn when servicing the vessel main body.**
6. **Use only non-sparking tools when performing maintenance on the filtering equipment and on the fuel system components.**
7. **Avoid any unnecessary contact of fluid to the skin or clothing. Always wear safety gloves and glasses.**
8. **Avoid any spillage of liquid in the operating area. Any spills must be cleaned up immediately to reduce injury from slipping.**
9. **Personnel should wash hands thoroughly after any maintenance to the filtering equipment or any of its components. Apply medication to any cuts or abrasions.**
10. **Secure medical attention for any serious cuts, stomach discomfort or breathing difficulties that may be caused by excessive inhalation of fumes.**

Fire Hazard

Adequate fire fighting equipment should be provided for the operating area before conducting a fluid test and at all times when performing any maintenance or service work in the operating area. Provide “No Smoking” signs in the operating area.

1. **Opening the access cover before the vessel is securely mounted may cause the vessel to become unstable and could result in vessel falling over.**
2. **Correctly identify the inlet and outlet connections before connecting the vessel in the system. The unit will not perform properly should the connections be reversed.**
3. **Turn off any heating devices before performing any maintenance or service work.**
4. **Due to the toxic effects of some of the additives used in liquid hydrocarbon products, care should be taken in handling any parts that have been in contact with liquid product.**
5. **Filter vessel must be relieved of internal pressure, drained or vented before removal or repair of any accessory option.**
6. **Do not over-tighten packing nuts or other connections. Stripped threads on the fittings may result in leaky joints. Replace any damaged fittings or parts before the filter vessel is put into operation.**

RVFS Series

Industrial Filter/Separator Vessels

The RVFS Series Filter/Water Separator Vessels are for use with Racor Hydrocarbon CP Series Coalescers and SP, SS, and ST Series Separator Cartridges. Racor hydrocarbon RVFS Series two-stage vertical coalescer/separator housings are designed to filter solids and separate two immiscible liquids. Using the correct combination of Racor hydrocarbon coalescer cartridges and second stage separator cartridges will provide the highest degree of water and solids removal.

Applications:

- Jet A, Jet A1, JP4, JP5, JP8
- Kerosene
- Gasoline, Diesel Fuel

Installations:

- Refineries
- Terminals, Loading racks
- Mobile and marine fuel sites

Connections:

- Inlet/Outlet: 150# RF (ANSI) flanged
- Main Drain: 1 - 2 inch NPT
- Vent and pressure relief connection: 3/4 inch NPT
- Differential pressure gauge/sample ports: 1/4 inch NPT

Features:

- Carbon steel construction; other materials available
- 150 psi ASME Code, Section VIII construction, stamped and certified
- Yellow zinc-plated swing bolt closure
- Buna-N o-ring cover seal
- Hydraulic jack cover lift
- Inlet and outlet permanently marked
- Interior: epoxy-coated MIL-C-4556 E
- Exterior: primer coated
- Knife-edge cartridge mounting seals

RVFS-244-233

Questions? Contact Technical Support:
800 344 3286 or 209 521 7860 ext. 7555
e-mail: racortech@parker.com

(FWS) Vertical Coalescer/Separators Overview

Model Number	Maximum Recommended Flow Rates at These Viscosities			
	1 CS 31.0 SSU	2.2 CS 33.0 SSU	3 CS 36.0 SSU	4 CS 39.0 SSU
RVFS-222-122	145 GPM (549 LPM)	115 GPM (435 LPM)	85 GPM (322 LPM)	65 GPM (246 LPM)
RVFS-244-233	290 GPM (1098 LPM)	240 GPM (908 LPM)	180 GPM (681 LPM)	130 GPM (492 LPM)
RVFS-344-233	435 GPM (1646 LPM)	340 GPM (1287 LPM)	250 GPM (946 LPM)	190 GPM (719 LPM)
RVFS-444-333	580 GPM (2195 LPM)	480 GPM (1817 LPM)	360 GPM (1363 LPM)	260 GPM (984 LPM)
RVFS-456-436	740 GPM (2801 LPM)	615 GPM (2328 LPM)	460 GPM (1741 LPM)	335 GPM (1268 LPM)
RVFS-656-536	1100 GPM (4164 LPM)	915 GPM (3463 LPM)	675 GPM (2555 LPM)	500 GPM (1893 LPM)
RVFS-856-736	1475 GPM (5583 LPM)	1220 GPM (4618 LPM)	915 GPM (3463 LPM)	660 GPM (2498 LPM)
RVFS-1056-936	1850 GPM (7002 LPM)	1530 GPM (5791 LPM)	1150 GPM (4353 LPM)	830 GPM (3142 LPM)
RVFS-1256-1136	2220 GPM (8403 LPM)	1835 GPM (6945 LPM)	1375 GPM (5204 LPM)	995 GPM (3766 LPM)
RVFS-1456-1336	2585 GPM (9784 LPM)	2140 GPM (8100 LPM)	1605 GPM (6075 LPM)	1160 GPM 4391 LPM)
RVFS-1656-1536	2955 GPM (11185 LPM)	2445 GPM (9254 LPM)	1835 GPM (6945 LPM)	1325 GPM (5015 LPM)
RVFS-2056-1936	3695 GPM (13986 LPM)	3060 GPM (11582 LPM)	2295 GPM (8687 LPM)	1655 GPM (6264 LPM)
RVFS-2456-2336	4435 GPM (16786 LPM)	3670 GPM (13891 LPM)	2755 GPM (10428 LPM)	1990 GPM (7532 LPM)
RVFS-2856-2736	5175 GPM (19587 LPM)	4280 GPM (16200 LPM)	3215 GPM (12169 LPM)	2320 GPM (8781 LPM)

RVFS Series

(FWS) Vertical Coalescer/Separators Overview

Model Number	Maximum Recommended Flow Rates at These Viscosities			
	5 CS 42.0 SSU	6.2 CS 45.0 SSU	8 CS 52.0 SSU	10 CS 58.0 SSU
RVFS-222-122	50 GPM (189 LPM)	40 GPM (151 LPM)	30 GPM (114 LPM)	25 GPM (95 LPM)
RVFS-244-233	100 GPM (379 LPM)	90 GPM (341 LPM)	60 GPM (227 LPM)	50 GPM (189 LPM)
RVFS-344-233	150 GPM (568 LPM)	125 GPM (473 LPM)	90 GPM (341 LPM)	75 GPM (284 LPM)
RVFS-444-333	200 GPM (757 LPM)	180 GPM (681 LPM)	120 GPM (454 LPM)	100 GPM (379 LPM)
RVFS-456-436	255 GPM (965 LPM)	230 GPM (871 LPM)	155 GPM 587 LPM)	130 GPM (492 LPM)
RVFS-656-536	385 GPM (1457 LPM)	335 GPM (1268 LPM)	230 GPM (871 LPM)	195 GPM (738 LPM)
RVFS-856-736	510 GPM (1930 LPM)	455 GPM (1722 LPM)	305 GPM (1154 LPM)	255 GPM (965 LPM)
RVFS-1056-936	640 GPM (2422 LPM)	570 GPM (2157 LPM)	380 GPM (1438 LPM)	320 GPM (1211 LPM)
RVFS-1256-1136	765 GPM (2896 LPM)	685 GPM (2593 LPM)	455 GPM (1722 LPM)	380 GPM (1438 LPM)
RVFS-1456-1336	895 GPM (3388 LPM)	800 GPM (3028 LPM)	530 GPM (2006 LPM)	445 GPM (1684 LPM)
RVFS-1656-1536	1020 GPM (3861 LPM)	915 GPM (3463 LPM)	610 GPM (2309 LPM)	510 GPM (1930 LPM)
RVFS-2056-1936	1275 GPM (4826 LPM)	1140 GPM (4315 LPM)	760 GPM (2877 LPM)	635 GPM (2403 LPM)
RVFS-2456-2336	1530 GPM (5791 LPM)	1370 GPM (5180 LPM)	915 GPM (3463 LPM)	765 GPM (2896 LPM)
RVFS-2856-2736	1785 GPM (6756 LPM)	1600 GPM (6056 LPM)	1065 GPM (4031 LPM)	895 GPM (3388 LPM)

Questions? Contact Technical Support:
800 344 3286 or 209 521 7860 ext. 7555
e-mail: racortech@parker.com

Mounting Information

Model Number	Specifications			
	Inlet Outlet	Drain	Weight	Volume
RVFS-222-122	2.0 in. (5.1 cm)	1.0 in. (2.5 cm)	620 lbs (281 kg)	35 gal (132 ltr)
RVFS-244-233	3.0 in. (7.6 cm)	1.0 in. (2.5 cm)	720 lbs (327 kg)	60 gal (227 ltr)
RVFS-344-233	4.0 in. (10.2 cm)	1.0 in. (2.5 cm)	850 lbs (386 kg)	80 gal (303 ltr)
RVFS-444-333	4.0 in. (10.2 cm)	1.0 in. (2.5 cm)	1000 lbs (454 kg)	115 gal (435 ltr)
RVFS-456-436	6.0 in. (15.2 cm)	1.0 in. (2.5 cm)	1100 lbs (499 kg)	140 gal (530 ltr)
RVFS-656-536	6.0 in. (15.2 cm)	1.5 in. (3.8 cm)	1400 lbs (635 kg)	200 gal (757 ltr)
RVFS-856-736	8.0 in. (20.3 cm)	1.5 in. (3.8 cm)	1900 lbs (862 kg)	270 gal (1022 ltr)
RVFS-1056-936	8.0 in. (20.3 cm)	1.5 in. (3.8 cm)	2300 lbs (1043 kg)	365 gal (1382 ltr)
RVFS-1256-1136	8.0 in. (20.3 cm)	1.5 in. (3.8 cm)	2500 lbs (1134 kg)	415 gal (1571 ltr)
RVFS-1456-1336	10.0 in. (25.4 cm)	2.0 in. (5.1 cm)	3400 lbs (1542 kg)	530 gal (2006 ltr)
RVFS-1656-1536	10.0 in. (25.4 cm)	2.0 in. (5.1 cm)	3800 lbs (1724 kg)	580 gal (2195 ltr)
RVFS-2056-1936	12.0 in. (30.5 cm)	2.0 in. (5.1 cm)	4500 lbs (2040 kg)	900 gal (3407 ltr)
RVFS-2456-2336	12.0 in. (30.5 cm)	2.0 in. (5.1 cm)	5700 lbs (2585 kg)	1160 gal (4391 ltr)
RVFS-2856-2736	14.0 in. (35.6 cm)	2.0 in. (5.1 cm)	6500 lbs (2948 kg)	1390 gal (5261 ltr)

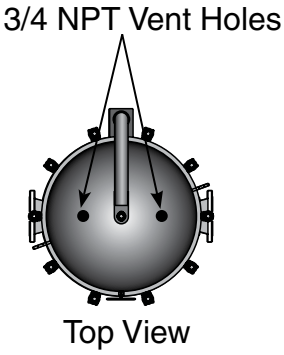

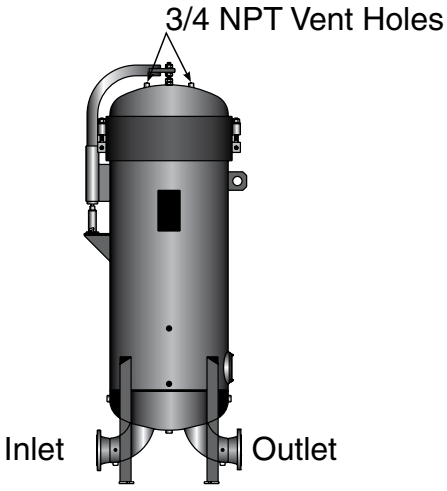

RVFS Series

Mounting Information

Model Number	Dimensions			
	A	B	C	D
RVFS-222-122	16.0 in. (40.6 cm)	52.0 in. (132.1 cm)	6.0 in. (15.2 cm)	17.0 in. (43.2 cm)
RVFS-244-233	18.0 in. (45.7 cm)	77.0 in. (195.6 cm)	6.0 in. (15.2 cm)	23.0 in. (58.4 cm)
RVFS-344-233	20.0 in. (50.8 cm)	78.0 in. (198.1 cm)	6.0 in. (15.2 cm)	28.0 in. (71.1 cm)
RVFS-444-333	24.0 in. (61.0 cm)	80.0 in. (203.2 cm)	6.0 in. (15.2 cm)	28.0 in. (71.1 cm)
RVFS-456-436	24.0 in. (61.0 cm)	97.0 in. (246.7 cm)	7.5 in. (19.1 cm)	36.0 in. (91.4 cm)
RVFS-656-536	28.0 in. (71.1 cm)	108 in. (274.3 cm)	7.5 in. (19.1 cm)	36.0 in. (91.4 cm)
RVFS-856-736	32.0 in. (81.3 cm)	114 in. (289.6 cm)	9.0 in. (22.9 cm)	46.0 in. (116.8 cm)
RVFS-1056-936	36.0 in. (91.4 cm)	115 in. (292.1 cm)	9.0 in. (22.9 cm)	48.0 in. (121.9 cm)
RVFS-1256-1136	38.0 in. (96.5 cm)	116 in. (294.6 cm)	9.0 in. (22.9 cm)	48.0 in. (121.9 cm)
RVFS-1456-1336	42.0 in. (106.7 cm)	118 in. (299.7 cm)	10.0 in. (25.4 cm)	54.0 in. (137.2 cm)
RVFS-1656-1536	48.0 in. (121.9 cm)	120 in. (304.8 cm)	10.0 in. (25.4 cm)	60.0 in. (152.4 cm)
RVFS-2056-1936	54.0 in. (137.2 cm)	125 in. (317.5 cm)	12.0 in. (30.5 cm)	69.0 in. (175.3 cm)
RVFS-2456-2336	60.0 in. (152.4 cm)	129 in. (327.7 cm)	12.0 in. (30.5 cm)	71.0 in. (180.3 cm)
RVFS-2856-2736	66.0 in. (167.6 cm)	143 in. (363.2 cm)	14.0 in. (35.6 cm)	80.0 in. (203.2 cm)

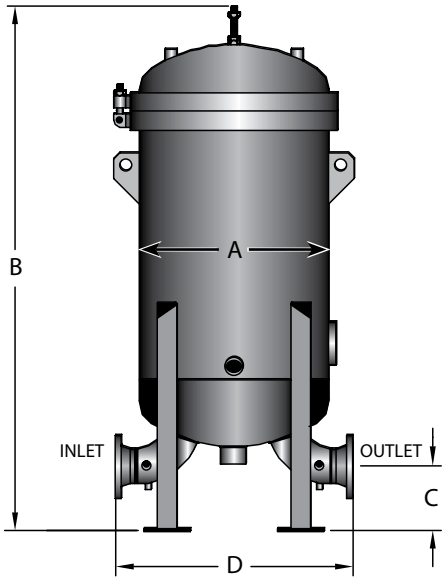

Replacement Elements

Model Number	Element Information			
	# of Coalescer Elements	# of Separator Elements	Silicone Treated 05 Series	1 Micron
RVFS-222-122	2	1	SP-22605-S	CP-22654-TB
RVFS-244-233	2	2	SP-33605-S	CP-44654-TB
RVFS-344-233	3	2	SP-33605-S	CP-44654-TB
RVFS-444-333	4	3	SP-33605-S	CP-44654-TB
RVFS-456-436	4	4	SP-36605-S	CP-56654-TB
RVFS-656-536	6	5	SP-36605-S	CP-56654-TB
RVFS-856-736	8	7	SP-36605-S	CP-56654-TB
RVFS-1056-936	10	9	SP-36605-S	CP-56654-TB
RVFS-1256-1136	12	11	SP-36605-S	CP-56654-TB
RVFS-1456-1336	14	13	SP-36605-S	CP-56654-TB
RVFS-1656-1536	16	15	SP-36605-S	CP-56654-TB
RVFS-2056-1936	20	19	SP-36605-S	CP-56654-TB
RVFS-2456-2336	24	23	SP-36605-S	CP-56654-TB
RVFS-2856-2736	28	27	SP-36605-S	CP-56654-TB

RVFS Series

Replacement Elements

Model Number	Element Information			
	.5 Micron 32 Series	2 Micron 55 Series	5 Micron 58 Series	25 Micron 78 Series
RVFS-222-122	CP-22632-TB	CP-22655-TB	CP-22658-TB	CP-22678-TB
RVFS-244-233	CP-44632-TB	CP-44655-TB	CP-44658-TB	CP-44678-TB
RVFS-344-233	CP-44632-TB	CP-44655-TB	CP-44658-TB	CP-44678-TB
RVFS-444-333	CP-44632-TB	CP-44655-TB	CP-44658-TB	CP-44678-TB
RVFS-456-436	CP-56632-TB	CP-56655-TB	CP-56658-TB	CP-56678-TB
RVFS-656-536	CP-56632-TB	CP-56655-TB	CP-56658-TB	CP-56678-TB
RVFS-856-736	CP-56632-TB	CP-56655-TB	CP-56658-TB	CP-56678-TB
RVFS-1056-936	CP-56632-TB	CP-56655-TB	CP-56658-TB	CP-56678-TB
RVFS-1256-1136	CP-56632-TB	CP-56655-TB	CP-56658-TB	CP-56678-TB
RVFS-1456-1336	CP-56632-TB	CP-56655-TB	CP-56658-TB	CP-56678-TB
RVFS-1656-1536	CP-56632-TB	CP-56655-TB	CP-56658-TB	CP-56678-TB
RVFS-2056-1936	CP-56632-TB	CP-56655-TB	CP-56658-TB	CP-56678-TB
RVFS-2456-2336	CP-56632-TB	CP-56655-TB	CP-56658-TB	CP-56678-TB
RVFS-2856-2736	CP-56632-TB	CP-56655-TB	CP-56658-TB	CP-56678-TB

Questions? Contact Technical Support:
800 344 3286 or 209 521 7860 ext. 7555
e-mail: racortech@parker.com

RVMF Series

Microfilter Vessels

The RVMF Series Vertical Vessels are used with Racor Hydrocarbon FP, FS, and HIF coreless, high efficiency microfilter series cartridges. Racor hydrocarbon filter housings are designed for removing solid contaminants such as dirt, rust, pipe scale and other types of solids from fuels. Racor hydrocarbon vessels are designed for a single pass through the high efficiency cartridges providing clean product downstream.

Applications

- **Jet A, Jet A1**
- **JP4, JP5, JP8**
- **Diesel Fuel**
- **Kerosene**
- **Gasoline**
- **Bio-Diesel**

Optional Accessories

- **Automatic air eliminator**
- **Differential pressure gauge**
- **Pressure relief valve**
- **Manual drain valve**
- **Sampling probes**
- **Liquid level sight glass**

Features

- **Carbon steel construction.**
- **150 psi ASME Code, Section VIII construction, stamped and certified.**
- **Zinc-plated swing bolt closure.**
- **Buna-N o-ring cover seal.**
- **Hydraulic jack cover lift furnished on 14 inch and larger vessels.**
- **HIF center tubes when required.**
- **Inlet and outlet permanently marked.**
- **Interior: epoxy-coated MIL-C-4556 E.**
- **Exterior: prime coated.**
- **Knife-edge cartridge mounting seals.**
- **Rod mount cartridge hardware.**

RVMF-400-2-44

RVMF Series

Specifications	Flow Rate (Jet Fuel)	Flow Rate (Diesel)
RVMF-400-2-44	400 GPM (1514 LPM)	200 GPM (757 LPM)
RVMF-600-3-44	600 GPM (2271 LPM)	300 GPM (1135 LPM)
RVMF-800-4-44	850 GPM (3217 LPM)	425 GPM (1608 LPM)
RVMF-1200-6-44	1200 GPM (4542 LPM)	600 GPM (2271 LPM)

Questions? Contact Technical Support:
800 344 3286 or 209 521 7860 ext. 7555
e-mail: racortech@parker.com

Electrostatically Conductive 2" Monitor Elements - (Out to In)

Design Features

The Racor RMO-E monitors are tested and qualified in accordance with the EI (IP) 1583, 4th edition (Qualification Procedures for Aviation Fuel Filter Monitors with Absorbent Type Elements). Less than 15 ppm of free water in the effluent. Works even in the presence of surfactants and additives in the fuel. Fully interchangeable with other EI (IP) approved elements. Less than 0.26 mg/l average of solids in the effuent.

Filter monitor vessels fitted with monitor elements are used on aircraft refueling vehicles, hydrant dispensers and other mobile fueling equipment.

This element is qualified to the latest addendum to EI (IP) 1583, 4th edition and is electrically conductive to dissipate electrostatic charges!

Technical Details

- **Tested and qualified to EI (IP) 1583, 4th ed.**
- **Nominal Filtration: 1 micron**
- **Changeout differential pressure: 25 psid**
- **Min. collapse pressure: 175 psid**
- **Recommended service time: 12 months[1]**
- **Recommended storage time:[2] 36 months[1]**
- **Operating temp.: 176°F (max)**
- **Electrical Resistance: <15 MOhm**
- **O-ring in NBR (Buna-N)**
- **Flow direction: Outside to Inside**
- **Outside diameter: 2˝**
- **Labeling according to EI (IP) 1583, 4th Edition (manufacture date, ID-Number, etc.)**

[1] Manufacturer recommendation

[2] If in original packaging, at 68°F, and a maximum of 50% humidity after date of shipment from manufacturers stock.

NOTE: Not recommended for use in aviation fuels with FSII.

Element Nomenclature

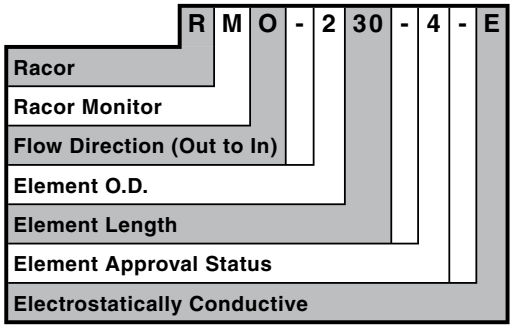

Part Number	Nominal Length (in.)	Flow Rate		Cross Reference	
		GPM	LPM	Velcon	Facet
RMO-205-4-E	5	5	19	CDF-205N	
RMO-210-4-E	10	10	38	CDF-210N	
RMO-215-4-E	15	15	57	CDF-215N	
RMO-220-4-E	20	20	76	CDF-220N	
RMO-225-4-E	25	25	95	CDF-225N	
RMO-230-4-E	30	30	114	CDF-230N	

RMO Series

2" Monitor Elements - (Out to In)

Design Features

The Racor RMO monitors are tested and qualified in accordance with the EI (IP) 1583, 4th edition (Qualification Procedures for Aviation Fuel Filter Monitors with Absorbent Type Elements). Less than 15 ppm of free water in the effluent. Works even in the presence of surfactants and additives in the fuel. Fully interchangeable with other EI (IP) approved elements. Less than 0.26 mg/l average of solids in the effuent.

Filter monitor vessels fitted with monitor elements are used on aircraft refueling vehicles, hydrant dispensers and other mobile fueling equipment.

Technical Details

- **Tested and qualified to EI (IP) 1583, 4th ed.**
- **Nominal Filtration: 1 micron**
- **Changeout differential pressure: 25 psid**
- **Minimum collapse pressure: 175 psid**
- **Recommended service time: 12 months[1]**
- **Recommended storage time:[2] 36 months[1]**
- **Operating temperature: 176°F (max)**
- **O-ring in NBR (Buna-N)**
- **Flow direction: Outside to Inside**
- **Outside diameter: 2˝**
- **Labeling according to EI (IP) 1583, 4th Edition (manufacture date, ID-Number, etc.)**

[1] Manufacturer recommendation

[2] If in original packaging, at 68°F, and a maximum of 50% humidity after date of shipment from manufacturers stock.

NOTE: Not recommended for use in aviation fuels with FSII.

Element Nomenclature

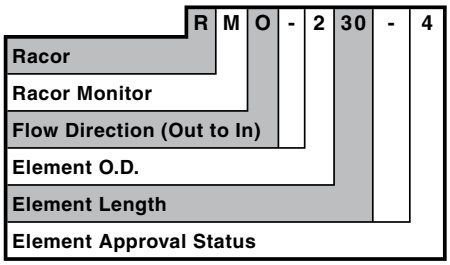

Part Number	Nominal Length (in.)	Flow Rate		Cross Reference	
		GPM	LPM	Velcon	Facet
RMO-205-4	5	5	19	CDF-205K	FG-205-4
RMO-210-4	10	10	38	CDF-210K	FG-210-4
RMO-215-4	15	15	57	CDF-215K	FG-215-4
RMO-220-4	20	20	76	CDF-220K	FG-220-4
RMO-225-4	25	25	95	CDF-225K	FG-225-4
RMO-230-4	30	30	114	CDF-230K	FG-230-4

RST & RSS Series

Separator Elements API/IP Qualified

E

Design Features

For the separation of water from aviation fuels in accordance with API 1581 3rd edition and API/IP 5th edition.

The second stage of the water removal process is completed using either a Teflon™ or synthetic separator element. The fuel flows from the coalescer element and enters the separator element from outside to inside. The separator element is manufactured from hydrophobic material and is designed to repel water droplets that are carried over from the coalescer element. These water droplets are retained on the separator element surface until they become large enough to fall under gravity into the water collection sump.

Technical Details

- **Tested and qualified to API 1581, 3rd Edition, Group II, Class B & C and API/IP 1581 5th edition, Category C, Type S.**
- **Effective water barrier.**
- **Reusable (when inspection guidelines are followed).**
- **Flow direction: out to in**
- **Operating temperature:176°F (max)**
- **Seals in NBR (Buna-N)**
- **Separator screen:**
  - **Hydrophobic Teflon™ coated stainless steel mesh.**
  - **Hydrophobic treated fine screen synthetic mesh**

Element Nomenclature

R ST - 6 33 - AA

Racor

Separator Type:
ST - Teflon
SS - Synthetic

Element O.D.

Element Nominal Length:
6″, 11″, 12″, 14″, 22″, 24″, 29″, 33″, 36″, 40″, 43″, 48″, 56″

Endcap Configuration		
Suffix	I.D. Top Endcap	I.D. Bottom Endcap
AA	3 1/2″	3 1/2″
AB	Closed, 1/2″ I.D. Hole	3 1/2″
AC	3 1/2″	4.1″
AD	3 1/2″	4 1/2″
CB	Closed, 13mm I.D. Hole	4″
TB	Thread Base	4 1/2″

RST & RSS Series

Separator Elements

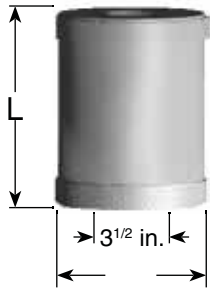

Type AA

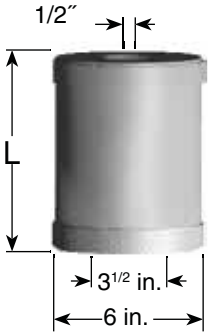

Type AB

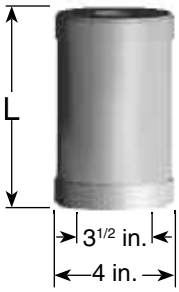

Type AA

Type AB

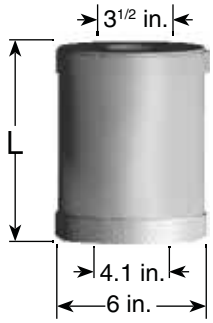

Type AC

Type AD

Type CB

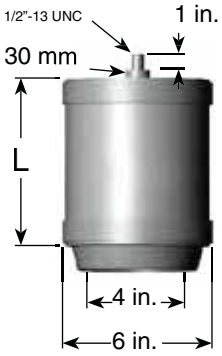

Endcap Type: TB
(Thread base)

Torque Settings

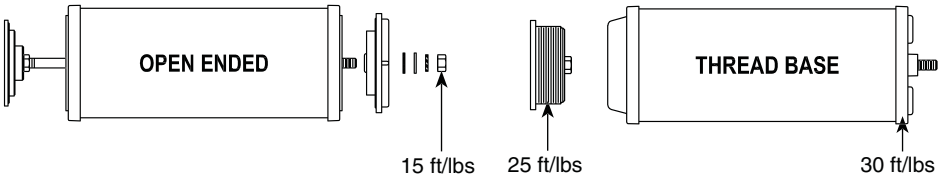

Conversion Table

ft/lbs	inch/ lbs	kg/m	Nm
5	60	0.70	7
15	180	2.07	20
20	240	2.80	27
25	300	3.50	34
30	360	4.15	40

Questions? Contact Technical Support:
800 344 3286 or 209 521 7860 ext. 7555
e-mail: racortech@parker.com

RMI Series

6″ Monitor Elements - (In to Out)

Design Features

The Racor RMI monitors are tested and qualified in accordance with the EI (IP) 1583, 4th edition (Qualification Procedures for Aviation Fuel Filter Monitors with Absorbent Type Elements). Less than 15 ppm of free water in the effluent. Works even in the presence of surfactants and additives in the fuel. Fully interchangeable with other EI (IP) approved elements. Less than 0.26 mg/l average of solids in the effuent.

Filter monitor vessels fitted with monitor elements are used on aircraft refueling vehicles, hydrant dispensers and other mobile fueling equipment.

Technical Details

- **Nominal filtration: 1 micron**
- **Changeout differential pressure: 25 psid**
- **Min. burst pressure: 175 psid**
- **Recommended service time: 12 months[1]**
- **Recommended storage time:[2] 24 months[1]**
- **Operating temperature: 176°F (max)**
- **Inner tube in epoxy painted steel**
- **Seals in NBR (Buna-N)**
- **Flow direction: Inside to Outside**
- **Outside diameter: 6″**
- **Thread base endcaps made out of Polyamide**
- **Labeling according to EI (IP) 1583, 4th ed. (date of manufacturing, ID-Number, etc.) on the endcap**

[1] Manufacturer recommendation

[2] Original packaging, 68°F and max. 50% humidity after date of shipment out of manufacturers stock.

NOTE: Not recommended for use in aviation fuels with FSII.

Element Nomenclature

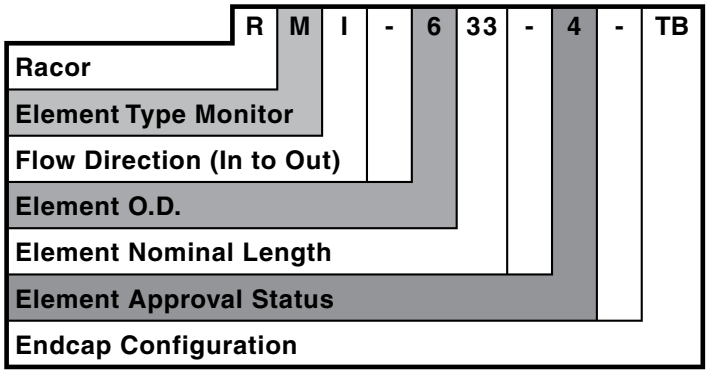

Questions? Contact Technical Support:
800 344 3286 or 209 521 7860 ext. 7555
e-mail: racortech@parker.com

Parker Racor

RMI Series

Cross Reference

	Racor Part Number	Nominal Length	Flow Rate in GPM	Cross Reference	
				Velcon	Facet
50/65MM	RMI-633-4-50MM	33	132		
50/65MM	RMI-633-4-65MM	33	132		
Double Open Ende	RMI-611-4	11	44	ACI-61101L	FG-1-611
Double Open Ende	RMI-614-4	14	56	ACI-61401L	FG-1-614
Double Open Ende	RMI-622-4	22	88	ACI-62201L	FG-1-622
Double Open Ende	RMI-628-4	28	114	ACI-62801L	FG-1-628
Double Open Ende	RMI-633-4	33	132	ACI-63301L	FG-1-633
Double Open Ende	RMI-638-4	38	152	ACI-63801L	FG-1-638
Double Open Ende	RMI-643-4	43	173	ACI-64401L	FG-1-644
Double Open Ende	RMI-656-4	56	224	ACI-65601L	FG-1-656
Thread Base	RMI-614-4-TB	14	56	ACI-61401LTB	FG-1-614SB
Thread Base	RMI-622-4-TB	22	88	ACI-62201LTB	FG-1-622SB
Thread Base	RMI-628-4-TB	28	114	ACI-62801LTB	FG-1-628SB
Thread Base	RMI-633-4-TB	33	132	ACI-63301LTB	FG-1-633SB
Thread Base	RMI-638-4-TB	38	152	ACI-63801LTB	FG-1-638SB
Thread Base	RMI-643-4-TB	43	173	ACI-64401LTB	FG-1-644SB
Thread Base	RMI-656-4-TB	56	224	ACI-65601LTB	FG-1-656SB

Endcap Type:
50mm and 65mm

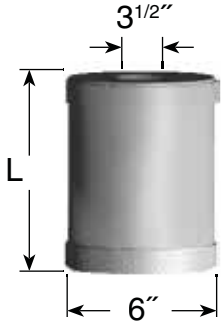

Standard Double
Open Ended

Torque Settings

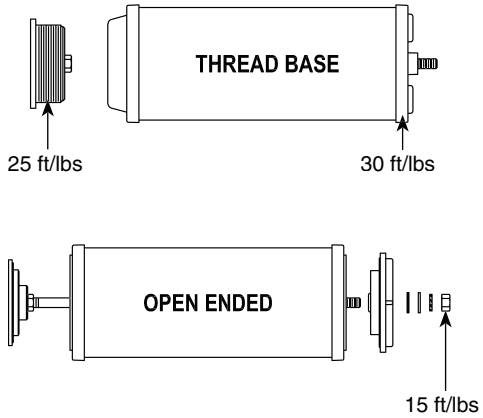

Conversion Table			
ft/lbs	inch/ lbs	kg/m	Nm
5	60	0.70	7
15	180	2.07	20
20	240	2.80	27
25	300	3.50	34
30	360	4.15	40

Endcap Type: TB
(Thread Base)

Questions? Contact Technical Support:
800 344 3286 or 209 521 7860 ext. 7555
e-mail: racortech@parker.com

RAC Series

Coalescer Elements API Qualified

Design Features

For the Separation of Water and Solids from Aviation Fuels in accordance with API 1581 3rd Edition.

API filter water separators are fitted with coalescer elements and separators which are required in jet fuel supply and delivery systems. These include fixed refueling installations, pipe lines and tank farms as well as aircraft refueling vehicles, hydrant dispensers and other mobile fueling equipment. Racor API coalescers and separators are also commonly used in other hydrocarbon fuel streams where high efficiency filtration and water separation are required.

Technical Details

- **Tested and qualified to API 1581, 3rd Edition, Group II, Class B & C**
- **Nominal Filtration: 1 micron**
- **Changeout Differential Pressure: 15 psid**
- **Minimum Burst Pressure: 75 psid**
- **Recommended Service Time: 24 months[1]**
- **Recommended Storage Time: 36 months[1]**
- **Operating Temperature: 176°F (max)**
- **Flow Direction: inside to outside**
- **Outside Diameter: 6 inch**
- **Metal parts in epoxy coated steel**
- **Seals in NBR (Buna-N)**
- **Thread based endcaps made out of Polyamide**
- **Labeling according to API (date of manufacture, ID Number, etc.) on the endcap**

[1] Manufacturer recommendation

[2] Original packaging, 68°F and max. 50% humidity after date of shipment out of manufacturers stock.

Element Nomenclature

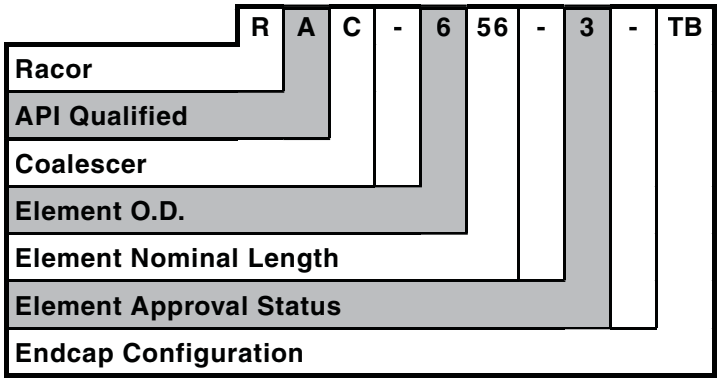

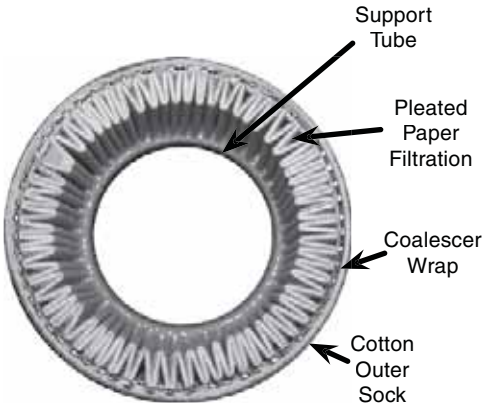

RAC Series

Cross Reference

	Racor Part Number	Length	Cross Reference: Velcon	Cross Reference: Facet
50 & 65MM	RAC-622-3-65MM	22		CA-22-W
	RAC-633-3-50MM	33		CA-33-A
	RAC-633-3-65MM	33		CA-33-W
	RAC-638-3-65MM	38		CA-38-W
Double Open Ended	RAC-611-3	11	I-61185 or I-61187	CA-11-3 or CAA-11-9
	RAC-614-3	14	I-61485 or I-61487	CA-14-3 or CAA-14-9
	RAC-622-3	22	I-62285 or I-62287	CA-22-3 or CAA-22-9
	RAC-628-3	28	I-62885 or I-62887	CA-28-3 or CAA-28-9
	RAC-633-3	33	I-63385 or I-63387	CA-33-3 or CAA-33-9
	RAC-638-3	38	I-63885 or I-63887	CA-38-3 or CAA-38-9
	RAC-643-3	43	I-64485 or I-64487	CA-43-3 or CAA-43-9
	RAC-656-3	56	I-65685 or I-65687	CA-56-3 or CAA-56-9
Thread Base	RAC-614-3-TB	14	I-61485-TB or I-61487-TB	CA-14-3-SB or CAA-14-9-TB
	RAC-622-3-TB	22	I-62285-TB or I-62287-TB	CA-22-3-SB or CAA-22-9-TB
	RAC-628-3-TB	28	I-62885-TB or I-62887-TB	CA-28-3-SB or CAA-28-9-TB
	RAC-633-3-TB	33	I-63385-TB or I-63387-TB	CA-33-3-SB or CAA-33-9-TB
	RAC-638-3-TB	38	I-63885-TB or I-63887-TB	CA-38-3-SB or CAA-38-9-TB
	RAC-643-3-TB	43	I-64485-TB or I-64487-TB	CA-43-3-SB or CAA-43-9-TB
	RAC-656-3-TB	56	I-65685-TB or I-65687-TB	CA-56-3-SB or CAA-56-9-TB

Endcap Type:
50mm and 65mm

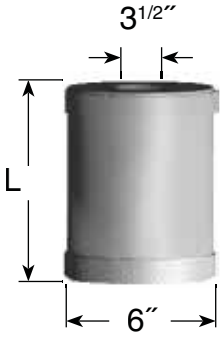

Standard Double
Open Ended

Torque Settings

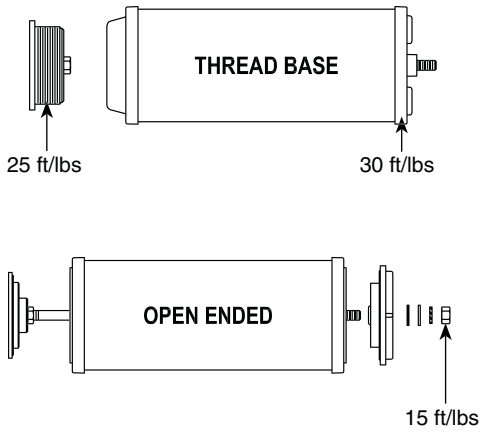

Conversion Table			
ft/lbs	inch/ lbs	kg/m	Nm
5	60	0.70	7
15	180	2.07	20
20	240	2.80	27
25	300	3.50	34
30	360	4.15	40

Endcap Type: TB
(Thread Base)

Questions? Contact Technical Support:
800 344 3286 or 209 521 7860 ext. 7555
e-mail: racortech@parker.com

RAC Series

Coalescer Elements API/IP Qualified

Design Features

For the Separation of Water and Solids from Aviation Fuels in accordance with API/IP 1581 5th Edition.

API/IP filter water separators are fitted with coalescer elements and separators which are required in jet fuel supply and delivery systems. These include fixed fueling installations, pipe lines and tank farms as well as aircraft refueling vehicles, hydrant dispensers and other mobile fueling equipment. Racor API/IP coalescers and separators are also commonly used in other hydrocarbon fuel streams where high efficiency filtration and water separation are required.

Technical Details

- **Tested and qualified to API/IP 1581, 5th Edition, Category C, Type S specifications**
- **Nominal Filtration: 1 micron**
- **Changeout Differential Pressure: 15 psid**
- **Minimum Burst Pressure: 75 psid**
- **Recommended Service Time: 24 months[1]**
- **Recommended Storage Time: 36 months[1]**
- **Operating Temperature: 176°F (max)**
- **Flow Direction: inside to outside**
- **Outside Diameter: 6 inch**
- **Metal parts in epoxy coated steel**
- **Seals in NBR (Buna-N)**
- **Thread based endcaps made out of Polyamide**
- **Labeling according to API/IP (date of manufacture, ID Number, etc.) on the endcap**

[1] Manufacturer recommendation

[2] Original packaging, 68°F and max. 50% humidity after date of shipment out of manufacturers stock.

Element Nomenclature

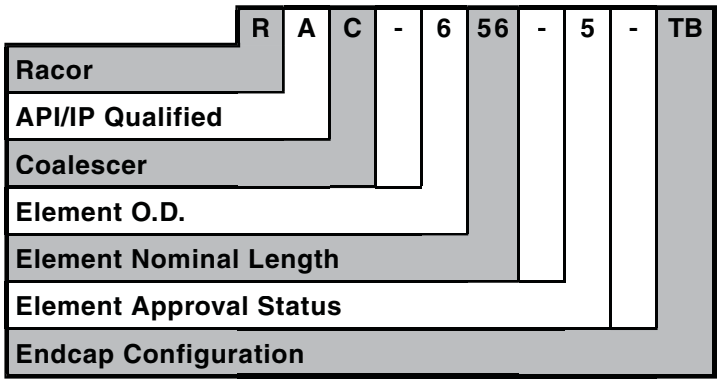

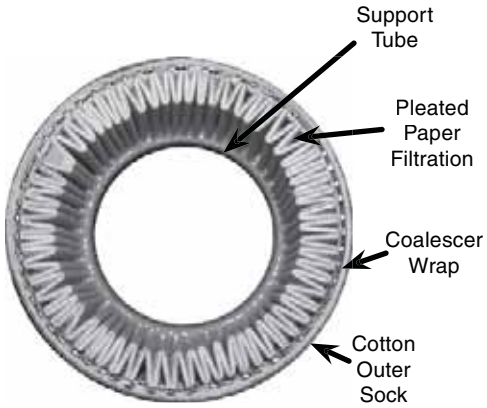

RAC Series

Cross Reference

	Racor Part Number	Nominal Length	Cross Reference: Velcon	Cross Reference: Facet
50 & 65MM	RAC-622-5-65MM	22		
	RAC-633-5-50MM	33		
	RAC-633-5-65MM	33		
	RAC-638-5-65MM	38		
Double Open Ended	RAC-611-5	11	I-611C5	CA-11-5
	RAC-614-5	14	I-614C5	CA-14-5
	RAC-622-5	22	I-622C5	CA-22-5
	RAC-628-5	28	I-628C5	CA-28-5
	RAC-633-5	33	I-633C5	CA-33-5
	RAC-638-5	38	I-638C5	CA-38-5
	RAC-643-5	43	I-644C5	CA-43-5
	RAC-656-5	56	I-656C5	CA-56-5
Thread Base	RAC-614-5-TB	14	I-614C5-TB	CA-14-5-SB
	RAC-622-5-TB	22	I-622C5-TB	CA-22-5-SB
	RAC-628-5-TB	28	I-628C5-TB	CA-28-5-SB
	RAC-633-5-TB	33	I-633C5-TB	CA-33-5-SB
	RAC-638-5-TB	38	I-638C5-TB	CA-38-5-SB
	RAC-643-5-TB	43	I-644C5-TB	CA-43-5-SB
	RAC-656-5-TB	56	I-656C5-TB	CA-56-5-SB

50mm: 2″
65mm: 2 9/16″

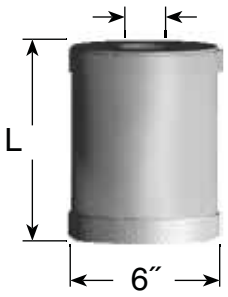

Endcap Type:
50mm and 65mm

3 1/2″

Standard Double
Open Ended

Torque Settings

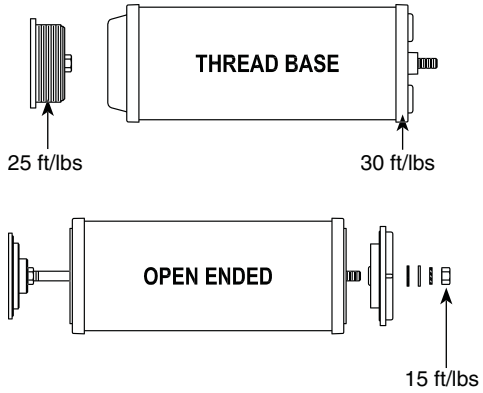

Conversion Table			
ft/lbs	inch/ lbs	kg/m	Nm
5	60	0.70	7
15	180	2.07	20
20	240	2.80	27
25	300	3.50	34
30	360	4.15	40

1/2-13 UNC

Endcap Type: TB
(Thread Base)

Questions? Contact Technical Support:
800 344 3286 or 209 521 7860 ext. 7555
e-mail: racortech@parker.com

Part Number Index

7

PRODUCT	PAGE#
7563	E19
7581	E6
70906	E19
71166	E19
71981	E19
71982	E19
72059	E19
72061	E19
72482	E19
72531	E6
72532	E6
72694	E6
72699	E6
72710	E6
72712	E6
72783	E6
72806	E6
73166	E6
73231	E6
71330-.125	E19
71943-.25	E6
71943-.5	E19
71943-.75	E19
72060-.5	E19
72060-.75	E19

F

PRODUCT	PAGE#
FBO 10654C	E4
FBO 10658C	E4
FBO-60328-V	E4
FBO-10668C	E4
FBO 10678C	E4
FBO 10602FP	E4
FBO-10604FP	E4
FBO 10605FP	E4
FBO 10607FP	E4
FBO 10601FW	E4
FBO 10605FW	E4
FBO 10610FW	E4
FBO 10625FW	E4
FBO 1410FW	E4
FBO 14654C	E4
FBO 14658C	E4
FBO 14668C	E4
FBO 14678C	E4
FBO 14501FP	E4
FBO 14604FP	E4
FBO 14605FP	E4
FBO 14607FP	E4
FBO14601FW	E4
FBO 14605FW	E4
FBO 14625FW	E4
FBO-10	E1, E2, E3, E4
FBO-10-25M	E2
FBO-10-DP	E2
FBO-10-DPL	E2
FBO-14	E1, E2, E3, E4
FBO-14-25M	E2
FBO-14-DP	E2
FBO-14-DPL	E2
FBO-14-HTR	E1, E2

R

PRODUCT	PAGE#
RHFM-A	E8
RHFM-A-1200	E8, E9
RHFM-A-200	E7, E8, E9
RHFM-A-300	E8, E9
RHFM-A-600	E8, E9
RHFM-A-900	E8, E9
RHFS-5-100	E11
RHFS-5-1000	E11

R continued

PRODUCT	PAGE#
RHFS-5-1200	E11
RHFS-5-200	E11
RHFS-5-300	E11
RHFS-5-400	E11
RHFS-5-600	E11
RHFS-5-800	E11
RK 30880	E6, E19
RVCT-1050	E13, E14
RVCT-1250	E13, E14
RVCT-300	E13, E14
RVCT-500	E13, E14
RVCT-650	E13, E14
RVCT-850	E13, E14
RVFS-1	E15, E16, E17, E19
RVFS-1056-936	E23, E24, E25, E26, E27, E28
RVFS-1256-1136	E23, E24, E25, E26, E27, E28
RVFS-1456-1336	E23, E24, E25, E26, E27, E28
RVFS-1656-1536	E23, E24, E25, E26, E27, E28
RVFS-2	E15, E16, E17, E19
RVFS-2056-1936	E23, E24, E25, E26, E27, E28
RVFS-222-122	E23, E24, E25, E26, E27, E28
RVFS-244-233	E23, E24, E25, E26, E27, E28
RVFS-2456-2336	E23, E24, E25, E26, E27, E28
RVFS-2456-2736	E23, E24, E25, E26, E27, E28
RVFS-3	E15, E16, E17, E19
RVFS-344-233	E23, E24, E25, E26, E27, E28
RVFS-444-333	E23, E24, E25, E26, E27, E28
RVFS-456-436	E23, E24, E25, E26, E27, E28
RVFS-656-536	E23, E24, E25, E26, E27, E28
RVFS-856-736	E23, E24, E25, E26, E27, E28
RVFS-D-50	E11
RVMF-1200-6-44	E30
RVMF-400-2-44	E30
RVMF-600-3-44	E30
RVMF-800-4-44	E30

Questions? Contact Technical Support:
800 344 3286 or 209 521 7860 ext. 7555
e-mail: racortech@parker.com

Section: F
Air Filtration

aerospace
climate control
electromechanical
filtration
fluid & gas handling
hydraulics
pneumatics
process control
sealing & shielding

Parker Racor

ENGINEERING YOUR SUCCESS.

Table of Contents

AF Series F1
AFUP Series HD Air Filters for under hood applications F5
AFAP Series HD Off Highway Pre Cleaners F8
AFCS Series HD Combination Pre Cleaners F12
AFHP Series HD On Highway Pre Cleaners F21
AFM Series Marine Air Filters F25
AFSF Series HD Air Filters for on hwy and stationary applications F30
Cabin Air Filters F39
EA Series Replacement Air Filters F40
EACP Series Air Composite PreCleaners F41
EAF Series Composite HD Air Cleaner F42
EAVLR Series Composite HD Air Cleaner - very low restriction F44
ECO® Series Heavy Duty Air Cleaners F46
ECO II Series Spin On Disposable Air Cleaners F47
ECO II HC Series Spin On Disposable Air Cleaner - hi capacity F51
ECO III Series Air Filtration System with Primary/Secondary F52
ECOLITE Series Air Filter with choice of flow direction F56
ECO BC Series Spin-On Disposable for Behind the Cab F57
ECO CM Series Spin-On for Cowl Mount Installation F58
ECO-LL Series Spin-On Disposable for Long Life F60
ECO S2 Series Spin-On Disposable Air Cleaner F63
ECO-SE Series Spin-On Disposable for Small Engine F64
ECO SM Series Spin-On Disposable for Scheduled Maintenance F65
Ember Separator F67
Spinaire Series Metal Housing Pre Cleaner F70
Tenkay Elements F73
Pamic Series 2 stage Air Filtration System For Light and Medium Service F74, F80
Autopamic Series 2 stage Air Filtration System For Medium and Heavy Service F75
Rotopamic Series Air Filtration System Heavy Service Application F77
Unipamic Series Single Stage Air Filtration System F78
Dynacell Seriess Single Stage, Low Profile Air Cleaner F86
Washable Filters F94
Air Dryers F99
Air Accessories F101
Clamps F102
Restriction Indicators F105
Filter Monitor F105
Fittings, Elbows and Adapters F107
Part Number Index F120

Questions? Contact Technical Support:
800 344 3286 or 209 521 7860 ext. 7555
e-mail: racortech@parker.com

AF Series

Air Filtration Systems

- Mobile & Stationary Heavy-Duty Air Cleaners
- Combination Air Filters & Pre-Cleaners
- Pre-Cleaners & Separators
- Crankcase Ventilation Filtration Systems
- Marine Air Filter/Silencers
- Air Filter Elements
- Cabin Air Filters

AFSF4

AFCF051

AFAP083

AFUP006

AFHP31

AF Series

AFCF Series

Applications

Racor Combination Dynamic Pre-Cleaner /Air Filters are specifically designed to be connected to the air intake of gasoline and diesel engines. The advantages of the systems include their compact size and ease of installation. The three-stage air filtration systems are designed with only one connection to the engine.

Applications include:

- **Agricultural machinery.**
- **Earth moving, construction & mining equipment.**
- **Stationary engines, generator sets.**
- **Trucks, pick-ups, off-road vehicles.**
- **Material handling equipment.**
- **Snow removal equipment & street sweepers.**

Features and Benefits

- **Pre-Cleaners remove up to 90% of impurities from itake air before the air enters the filter elements.**
- **Extends engine air filter life.**
- **Reduces down time.**
- **Prolongs engine and turbocharger life.**
- **Saves on fuel costs.**
- **Safety element is standard in most models.**

Questions? Contact Technical Support:
800 344 3286 or 209 521 7860 ext. 7555
e-mail: racortech@parker.com

AFCF Series Overview

Specifications	AFCS051	AFCS071	AFCS081	AFCS121
Air Flow	53-124 CFM (1.5-3.5 m^3/min)	124-159 CFM (3.5-4.5 m^3/min)	159-212 CFM (4.5-6.0 m^3/min)	212-282 CFM (6.0-12.0 m^3/min)
HP Range	30-70 HP (22-52 KW)	50-70 HP (37-52 KW)	70-80 HP (52-60 KW)	80-110 HP (60-82 KW)
Weight	8.6 lbs (3.9 kg)	10.4 lbs (4.7 kg)	12.7 lbs (5.8 kg)	16.5 lbs (7.6 kg)
Length	15.0 in. (38.2 cm)	18.9 in. (48.0 cm)	20.5 in. (52.0 cm)	22.2 in. (56.4 cm)
Width	7.4 in. (18.8 cm)	7.4 in. (18.8 cm)	8.0 in. (20.4 cm)	9.1 in. (23.0 cm)
Outlet Size	2.5 in. (6.3 cm)	2.5 in. (6.3 cm)	2.8 in. (7.0cm)	3.0 in. (7.6 cm)

Specifications	AFCS181	AFCS221	AFCS251	AFCS261
Air Flow	282-423 CFM (8.0-12.0 m^3/min)	423-529 CFM (12.0-15.0 m^3/mim)	529-706 CFM (15.0-20.0 m^3/min)	706-741 CFM (20.0-21.0 m^3/min)
HP Range	110-150 HP (82-112 KW)	150-180 HP (112-135 KW)	180-240 HP (134-179 KW)	200-260 HP (149-194 KW)
Weight	20.3 lbs (9.2 kg)	24.2 lbs (11.0 kg)	30.0 lbs (13.6 kg)	31.9 lbs (14.5 kg)
Length	24.3 in. (61.6 cm)	25.5 in. (64.7 cm)	27.9 lbs (70.8 cm)	30.7 in. (78.0 cm)
Width	10.0 in. (25.3 cm)	11.3 in. (28.8 cm)	13.3 lbs (33.7 cm)	13.3 in. (33.7 cm)
Outlet Size	4.0 in. (10.2 cm)	4.0 in. (10.2 cm)	5.3 in. (13.3 cm)	5.1 in. (13.0 cm)

Element	AFCS051	AFCS071	AFCS081	AFCS121	AFCS181	AFCS221	AFCS251	AFCS261
Pimary Element	AR6322	AR6060	AR6122	AR6144	AR6067	AR234401	AR6277	AR246501
Safety Element	-	AS6121	AS6123	AS6180	AS6159	AS6182	AS6316	AS6220

AFCF Series

Replacement Parts

	Part Number	Description
1.	N/A	Lid kit
2.	N/A	Mounting Bracket
3.	see replacement **Pimary** element for your unit.	
4.	see replacement **Safety** element for your unit.	

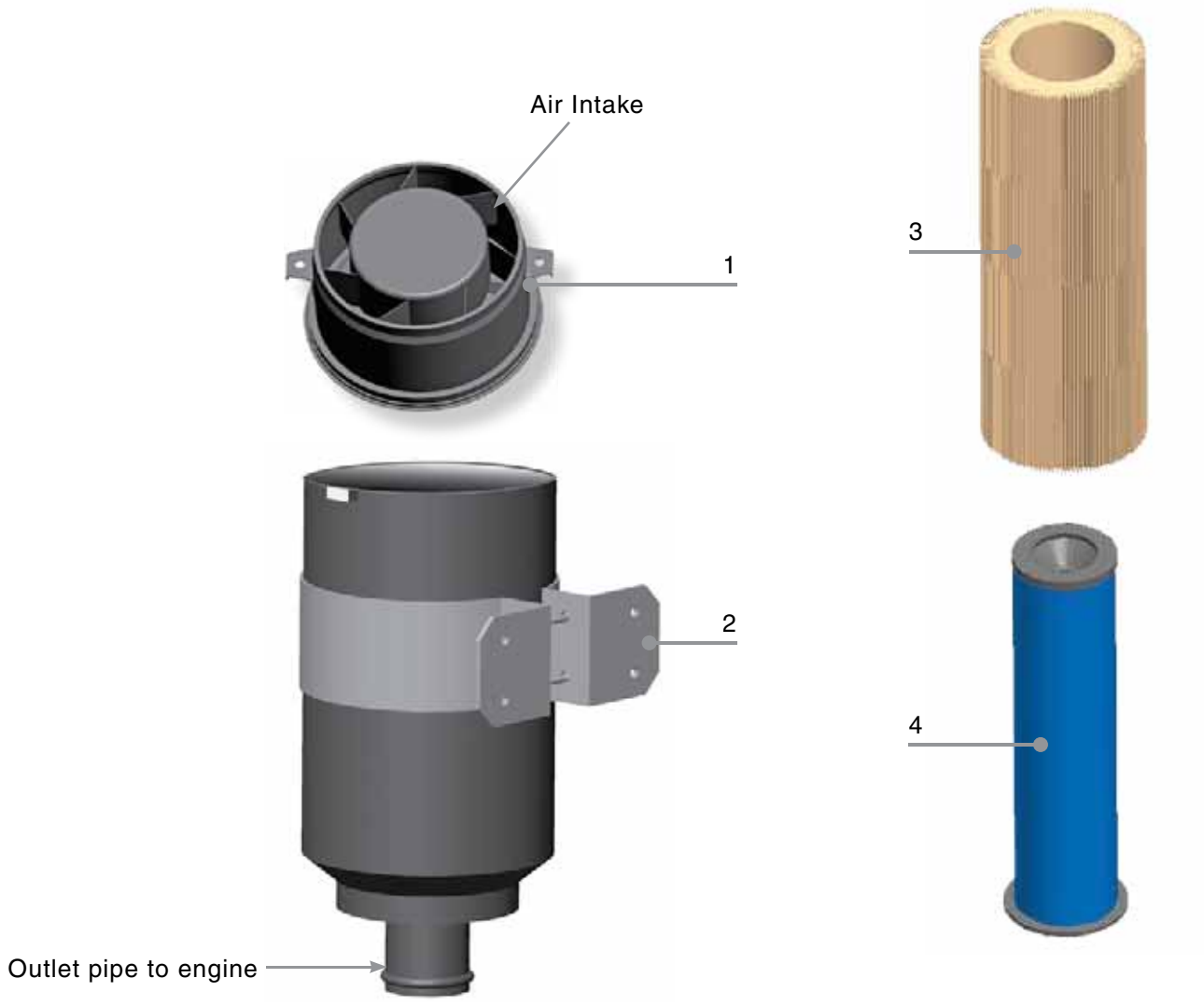

Questions? Contact Technical Support:
800 344 3286 or 209 521 7860 ext. 7555
e-mail: racortech@parker.com

AFUP Series

How they work

Racor Under-Hood Engine Air Pre-Cleaners can be remote-mounted or attached directly to the air cleaner eliminating the need for an external air intake.

- **No exterior vehicle modification for intake air.**
- **High air flow, low differential design.**

AFUP Series

AFUP Series Overview

Specifications	AFUP006	AFUP006E	AFUP007
Air Flow	53-141 CFM (1.5-4.0 m^3/min)	53-141 CFM (1.5-4.0 m^3/min)	141-176 CFM (4.0-5.0 m^3/min)
HP Range	30-60 HP (22-45 KW)	30-60 HP (22-45 KW)	60-70 HP (45-52 KW)
Weight	1.8 lbs (0.8 kg)	2.4 lbs (1.0 kg)	2.9 lbs (1.3 kg)
Height	5.1 in. (13.0 cm)	5.7 in. (14.5 cm)	6.2 in. (15.7 cm)
Width	5.6 in. (14.2 cm)	5.6 in. (14.2 cm)	7.1 in. (18.0 cm)
Outlet Size	(I.D.) 2.5 in (6.3 cm)	(O.D.) 2.5 in (6.3 cm)	(I.D.) 3-2.8-2.5 in. (7.6-7.0-6.3 cm)

Specifications	AFUP007E	AFUP021	AFUP021E
Air Flow	141-176 CFM (4.0-5.0 m^3/min)	176-282 CFM (5.0-8.0 m^3/min)	176-282 CFM (5.0-8.0 m^3/min)
HP Range	60-70 HP (45-52 KW)	70-100 HP (52-75 KW)	70-100 HP (52-75 KW)
Weight	3.1 lbs (1.4 kg)	3.5 lbs (1.6 kg)	4.1 lbs (1.9 kg)
Height	6.6 in. (16.8 cm)	5.8 in. (14.8 cm)	6.7 in. (17.0 cm)
Width	7.1 in. (18.0 cm)	7.9 in. (20.0 cm)	7.9 in. (20.0 cm)
Outlet Size	(O.D.) 3.0 in. (7.6 cm)	(I.D.) 3.3-3-2.8-2.5 in. (8.2-7.6-7.0-6.3 cm)	(O.D.) 3.3 in. (8.2 cm)

AFUP Series Overview

Specifications	AFUP041	AFUP041E	AFUP061
Air Flow	282-423 CFM (8.0-12.0 m^3/min)	282-423 CFM (8.0-12.0 m^3/min)	423-635 CFM (12.0-18.0 m^3/min)
HP Range	100-140 HP (75-104 KW)	100-140 HP (75-104 KW)	140-200 HP (104-150 KW)
Weight	4.3 lbs (2.0 kg)	4.9 lbs (2.2 kg)	5.0 lbs (2.3 kg)
Height	7.3 in. (18.6 cm)	7.4 in. (18.7 cm)	7.4 in. (18.9 cm)
Width	9.0 in. (22.8 cm)	8.9 in. (22.8 cm)	9.5 in. (24.0 cm)
Outlet Size	(I.D.) 4-3.8-3.5-3.3 in. (10.2-9.5-8.9-8.2 cm)	(O.D.) 4.0 in. (10.2 cm)	(I.D.) 5.3-5-4.8-4.5 in. (13.3-12.7-12.1-11.4 cm)

Specifications	AFUP061E	AFUP091	AFUP091E	AFUP131
Air Flow	423-635 CFM (12.0-18.0 m^3/min)	635-741 CFM (18.0-21.0 m^3/min)	635-741 CFM (18.0-21.0 m^3/min)	741-988 CFM (21.0-28.0 m^3/min)
HP Range	140-200 HP (104-150 KW)	200-300 HP (149-224 KW)	200-300 HP (149-224 KW)	300-350 HP (224-261 KW)
Weight	5.7 lbs (2.6 kg)	6.6 lbs (3.0 kg)	7.7 lbs (3.5 kg)	7.3 lbs (3.3 kg)
Height	8.0 in. (20.2 cm)	8.0 in. (204 cm)	9.0 in. (22.3 cm)	10.1 in. (25.6 cm)
Width	9.5 in. (24.0 cm)	11.0 in. (28.0 cm)	11.0 in. (28.0 cm)	13.0 in. (33.1 cm)
Outlet Size	(O.D.) 5.3 in. (13.3 cm)	(I.D.) 4.5-5.3 in. (11.4-13.3 cm)	(O.D.) 5.3 in. (13.3 cm)	(I.D.) 5.0-6.0 in. (12.7-15.2 cm)

AFAP Series

Engine Air Pre-cleaners

Racor Engine Air Pre-cleaners are designed to be mounted on or connected to the air filter intake of a gasoline or diesel engine air cleaner. Their applications include all slow moving and industrial equipment such as agricultural machinery; earth moving, construction and mining equipment; pumping plants; generator sets; material handling equipment; snow removal equipment and street sweepers.

Removes up to 90% of impurities from intake air before the air enters the filter elements. Extends engine air filter life. Reduces down time. Prolongs engine and turbocharger life. Saves on fuel costs. Easy to install. Three plastic outlet reduction sleeves are provided with each assembly.

A wide range of applications and flow rates. Steel housing, black powder coat. High air flow, low differential design. The pre-cleaner is self-powered and self-cleaning, requiring no electrical or exhaust gas power to dispose of separated particles. It requires virtually no maintenance and should be inspected occasionally to insure that no foreign material has plugged intake or exhaust port areas.

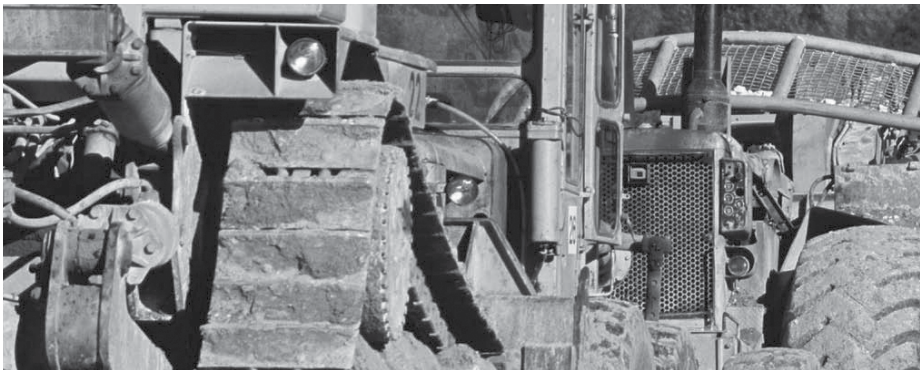

Applications

Racor Engine Air Precleaners are designed to be mounted on or connected to the air filter intake of a gasoline or diesel engine air cleaner. Their applications include all slow moving and industrial equipment such as agricultural machinery; earth moving, construction and mining equipment; pumping plants; generator sets; material handling equipment; snow removal equipment and street sweepers.

Product Features:

- **Air flow rates between 53 and 1411 (CFM).**
- **Outlet size 2.5-7.0 in.**
- **Metal housing.**
- **Dynamic vane pre-cleaner.**
- **For agriculture & construction use.**
- **Removes up to 90% of impurities from intake air before the air enters the filter.**

Questions? Contact Technical Support:
800 344 3286 or 209 521 7860 ext. 7555
e-mail: racortech@parker.com

AFAP Series Overview

Specifications	AFAP083	AFAP183	AFAP184	AFAP400
Flow Rate CFM	53 to 124 CFM (1.5 to 3.5 m3/min)	530 to 776 CFM (15.0 to 22.0 m3/min)	530 to 776 CFM (15.0 to 22.0 m3/min)	776 to 1059 CFM (22.0 to 30.0 m3/min)
Horsepower	30 to 60 HP (22 to 45 KW)	220 to 300 HP (165 to 225 KW)	220 to 300 HP (165 to 225 KW)	300 to 400 HP (225 to 300 KW)
Height	7.7 in. (19.5 cm)	16.1 in. (41.0 cm)	15.9 in. (40.5 cm)	18.5 in. (47.0 cm)
Diameter	7.4 in. (18.8 cm)	13.9 in. (35.2 cm)	13.9 in. (35.2 cm)	16.6 in. (42.1 cm)
Outlet Size	3.0, 2.8, 2.5 in. (7.6-7.0-6.3 cm)	5.3, 5.0, 4.8, 4.5 in. (13.5, 12.7, 12.2, 11.4 cm)	6.0, 5.5, 5.3, 5.0 in. (15.2, 14.0, 13.3, 12.7 cm)	6.0, 5.5, 5.3, 5.0 in. (15.2, 14.0, 13.3, 12.7 cm)
Weight	3.4 lbs (1.55 kg)	12.70 lbs (5.75 kg)	12.80 lbs (5.80 kg)	16.50 lbs (7.50 kg)

Specifications	AFAP401	AFAP414	AFAP415	AFAP500
Flow Rate CFM	776 to 1059 CFM (22.0 to 30.0 m3/min)	124 to 247 CFM (3.5 to 7.0 m3/min)	124 to 247 CFM (3.5 to 7.0 m3/min)	530 to 776 CFM (15.0 to 22.0 m3/min)
Horsepower	300 to 400 HP (225 to 300 KW)	60 to 120 HP (45 to 90 KW)	60 to 120 HP (45 to 90 KW)	220 to 300 HP (165 to 225 KW)
Height	18.11 (460 mm)	12.8 in. (32.5 cm)	13.7 in. (34.8 cm)	16.14 (410 mm)
Diameter	16.57 (421 mm)	8.7 in. (22.1 cm)	8.7 in. (22.1 cm)	13.86 (352 mm)
Outlet Size	7.0, 6.8, 6.5, 6.3 in. (17.8, 17.1, 16.5, 15.9 cm)	3.3, 3.0, 2.8, 2.5 in. (8.2, 7.6, 7.0, 6.3 cm)	4.0, 3.8, 3.5, 3.3 in. (10.2, 9.5, 8.9, 8.2 cm)	5.3, 5.0, 4.8, 4.5 in. (13.3, 12.7, 12.1, 11.4 cm)
Weight	16.10 lbs (7.30 kg)	5.80 lbs (2.65 kg)	6.30 lbs (2.85 kg)	12.70 lbs (5.75 kg)

AFAP Series

AFAP Series Overview

Specifications	AFAP501	AFAP818	AFAP819	AFAP820
Flow Rate CFM	530 to 776 CFM (15.0 to 22.0 m3/min)	247 to 388 CFM (7.0 to 11.0 m3/min)	247 to 388 CFM (7.0 to 11.0 m3/min)	247 to 388 CFM (7.0 to 11.0 m3/min)
Horsepower	220 to 300 HP (165 to 225 KW)	120 to 160 HP (90 to 120 KW)	120 to 160 HP (90 to 120 KW)	120 to 160 HP (90 to 120 KW)
Height	16.14 (410 mm)	13.5 in. (34.2 cm)	13.98 (35.5 cm)	13.86 (35.2 cm)
Diameter	13.86 (352 mm)	10.7 in. (27.1 cm)	10.7 in. (27.1 cm)	10.7 in. (27.1 cm)
Outlet Size	5.3, 5.0, 4.8, 4.5 in. (13.3, 12.7, 12.1, 11.4 cm)	3.3, 3.0, 2.8, 2.5 in. (8.2, 7.6, 7.0, 6.3 cm)	4.0, 3.8, 3.5, 3.3 in. (10.2, 9.5, 8.9, 8.2 cm)	4.5, 4.3, 4.0, 3.8 in. (11.4, 11.0, 10.2, 9.5 cm)
Weight	12.70 lbs (5.75 kg)	7.7 lbs (3.50 kg)	7.8 lbs (3.55 kg)	8.2 lbs (3.70 kg)

AFAP Series Overview

Specifications	AFAP919	AFAP920
Flow Rate CFM	388 to 530 CFM (11.0 to 15.0 m3/min)	388 to 530 CFM (11.0 to 15.0 m3/min)
Horsepower	160 to 220 HP (120 to 165 KW)	160 to 220 HP (120 to 165 KW)
Height	14.25 (36.2 cm)	14.60 (37.1 cm)
Diameter	12.4 in. (31.6 cm)	12.4 in. (31.6 cm)
Outlet Size	4.5, 4.3, 4.0, 3.8 in. (11.4, 11.0, 10.2, 9.5 cm)	5.3, 5.0, 4.8, 4.5 in. (13.3, 12.7, 12.1, 11.4 cm)
Weight	9.7 lbs (4.40 kg)	10.1 lbs (4.60 kg)

Notes:
cfm = feet^3 per minute
cmm = meters^3 per minute

Questions? Contact Technical Support:
800 344 3286 or 209 521 7860 ext. 7555
e-mail: racortech@parker.com

AFAP Series

F

Part Description

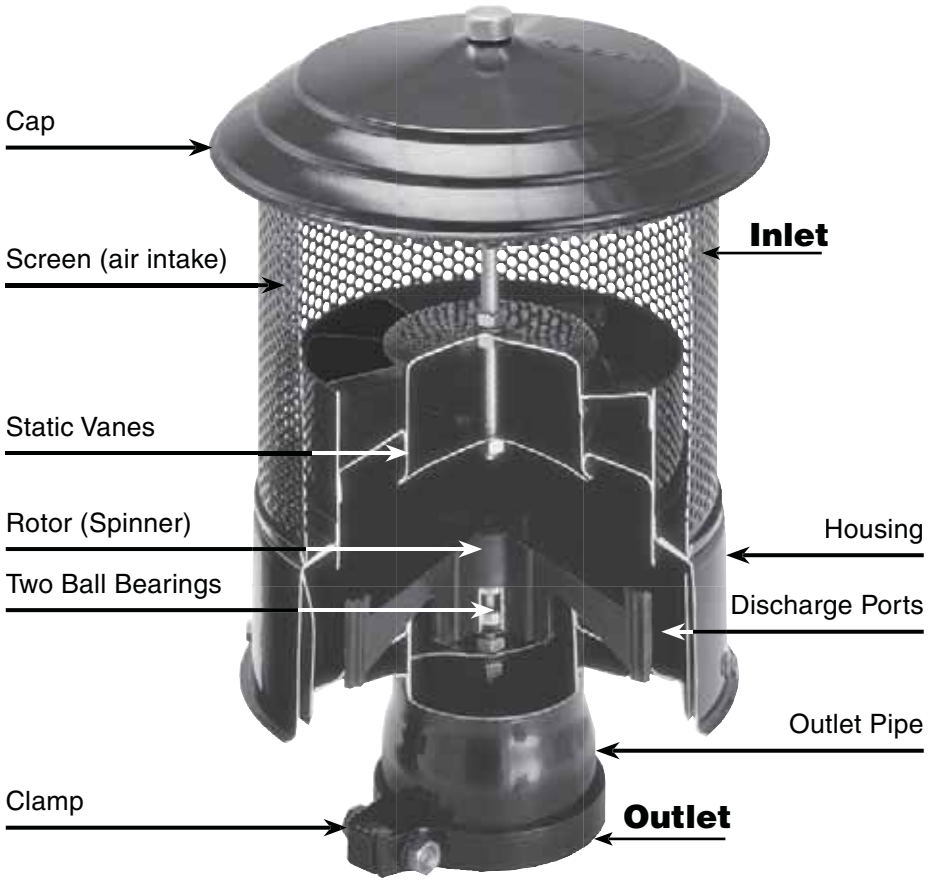

AFAP414 Cut View

Two Styles to Chose From

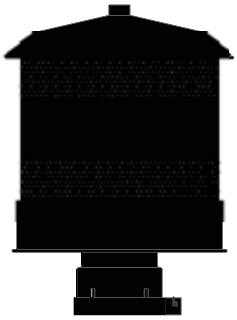

AFAP400

AFAP083

AFCS Series

Heavy-Duty Combination

Fresh air. That's what Racor air filtration is all about. Because when engines breathe easier they perform better – with more power, more torque and with improved fuel economy. The Racor lineup includes heavy-duty air cleaners and pre-cleaners, crankcase ventilation, marine filter/silencers, cabin air filters and replacement filters. All are super high-efficiency, with engineered, application-specific media that improves performance as it extends service life.

Whatever your application, there's a Racor Air Filtration System that will help you and your engine breathe easy.

Applications

Combination Dynamic Pre-Cleaner/Air Filters are specifically designed to be connected to the air intake of gasoline and diesel engines. The advantages of the systems include their compact size and ease of installation.

Applications include:

- **Agricultural machinery**
- **Earth moving, construction, and mining equipment**
- **Stationary engines, generator sets**
- **Trucks, off-road pick-ups**
- **Material handling equipment**
- **Snow removal equipment**
- **Street sweepers**

Features and Benefits

- **Pre-Cleaners remove up to 90% of impurities**
- **Reduces down time**
- **Prolongs engine, filter, and turbocharger life**
- **Saves on fuel costs**
- **Safety filter is standard in most models**

Questions? Contact Technical Support:
800 344 3286 or 209 521 7860 ext. 7555
e-mail: racortech@parker.com

AFCS Series Overview

Specifications	AFCS021	AFCS031	AFCS051	AFCS071
Maximum Flow Rate	88 cfm (2.5 cmm)	124 cfm (3.5 cmm)	124 cfm (3.5 cmm)	159 cfm (4.5 cmm)
Maximum Horsepower	50	70	70	70
Replacement Elements: (Primary)/(Safety)	E028	AR6322 / N/A	AR6322 / N/A	AR6060 / AS6121
Length	13.2 in (33.5 cm)	14.6 in. (37.0 cm)	15.0 in. (38.1 cm)	19.3 in. (49.0 cm)
Diameter	6.2 in. (15.7 cm)	6.7 in. (17.0 cm)	7.4 in. (18.8 cm)	7.4 in. (18.8 cm)
Weight	5.7 lb (2.6 kg)	7.3 lb (3.3 kg)	8.6 lb (3.9 kg)	10.4 lb (4.7 kg)
Inlet Diameter	1.6 in. (4.1 cm)	2.3 in. (5.8 cm)	2.5 in. (6.4 cm)	2.5 in. (6.4 cm)
Restriction Indicator	No	No	No	Yes

Specifications	AFCS081	AFCS121	AFCS181	AFCS221
Maximum Flow Rate	212 cfm (6.0 cmm)	282 cfm (8.0 cmm)	423 cfm (12.0 cmm)	529 cfm (15.0 cmm)
Maximum Horsepower	80	110	150	180
Replacement Elements: *(Primary)/(Safety)*	AR6122 / AS6123	AR6144 / AS6180	AR6067 / AS6159	AR234401/AS6182
Length	20.5 in (52.1 cm)	22.2 in. (56.4 cm)	24.3 in. (61.7 cm)	25.5 in. (64.8 cm)
Diameter	8.0 in. (20.3 cm)	9.1 in. (23.1 cm)	10.0 in. (25.4 cm)	11.3 in. (28.7 cm)
Weight	12.7 lb (5.7 kg)	16.5 lb (7.5 kg)	20.0 lb (9.1 kg)	24.2 lb (10.9 kg)
Inlet Diameter	2.8 in. (7.1 cm)	3.0 in. (7.6 cm)	4.0 in. (10.1 cm)	4.0 in. (10.1 cm)
Restriction Indicator	Yes	Yes	Yes	Yes

AFCS Series

AFCS Series Overview

Specifications	AFCS251	AFCS261	AFCS311
Maximum Flow Rate	706 cfm (20.0 cmm)	741 cfm (21.0 cmm)	988 cfm (28.0 cmm)
Maximum Horsepower	240	260	320
Replacement Elements: *(Primary)/(Safety)*	AR6277 / AS6316	AR246501 / AS6220	AR6154 / AS6221
Length	28.1 in (71.4 cm)	30.7 in. (77.9 cm)	30.5 in. (77.5 cm)
Diameter	13.3 in. (33.8 cm)	13.3 in. (33.8 cm)	14.5 in. (36.8 cm)
Weight	30.0 lb (13.6 kg)	31.9 lb (14.5 kg)	36.8 lb (16.7 kg)
Inlet Diameter	5.3 in. (13.5 cm)	5.1 in. (12.9 cm)	6.0 in. (15.2 cm)
Restriction Indicator	Yes	Yes	Yes

Specifications	AFCS351	AFCS431
Maximum Flow Rate	1235 cfm (35.0 cmm)	1517 cfm (43.0 cmm)
Maximum Horsepower	380	450
Replacement Elements: *(Primary)/(Safety)*	AR2201 / AS2207	AR6324 / AS6323
Length	30.5 in. (77.5 cm)	37.3 in. (94.7 cm)
Diameter	16.1 in. (41.0 cm)	18.4 in. (46.7 cm)
Weight	49.3 lb (22.4 kg)	65.2 lb (29.6 kg)
Inlet Diameter	6.0 in. (15.2 cm)	6.0 in. (15.2 cm)
Restriction Indicator	Yes	Yes

Notes:
cfm = feet^3 per minute
cmm = meters^3 per minute

Questions? Contact Technical Support:
800 344 3286 or 209 521 7860 ext. 7555
e-mail: racortech@parker.com

AFCS Series

F

Parts Description

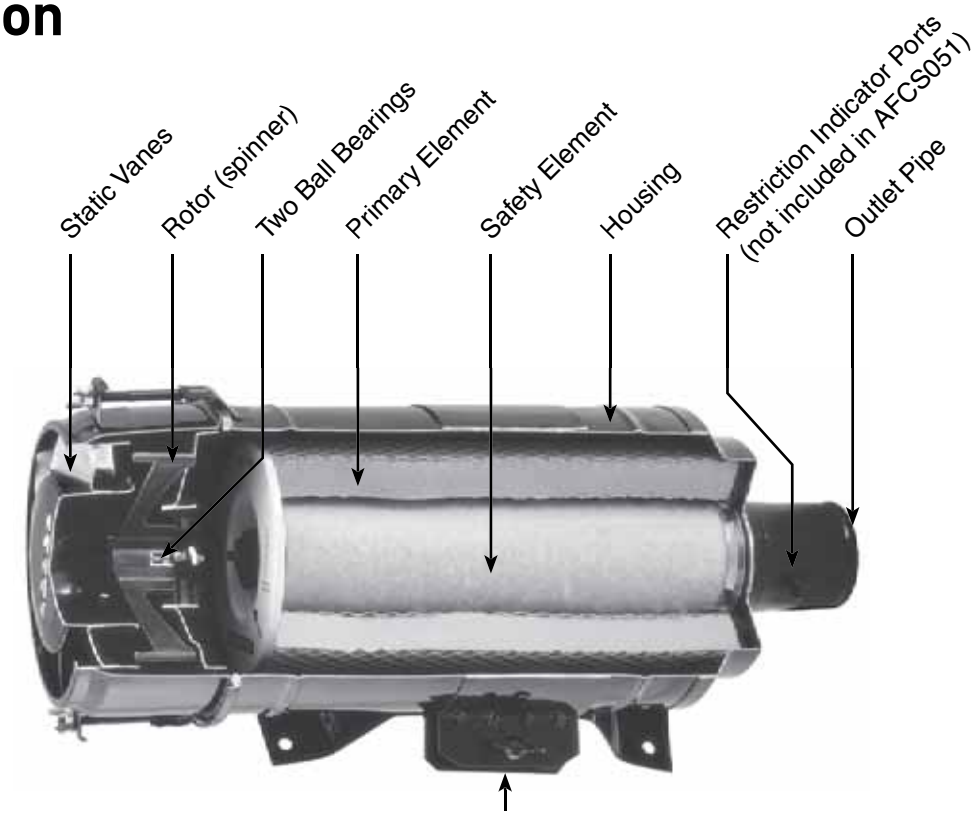

Mounting Band
AFCS051 - AFCS221

Pressure Drop at Maximum CFM (in. H_2O)

Assembly	With Safety Filter	Without Safety Filter
AFCS021	-	0.70
AFCS051	-	7.61
AFCS071	15.54	9.70
AFCS081	16.24	11.74
AFCS121	15.96	11.59
AFCS181	20.76	19.05
AFCS221	17.44	14.35
AFCS251	17.53	14.48
AFCS261	33.54	26.61
AFCS311	19.15	16.65
AFCS351	16.80	15.54
AFCS431	18.61	17.98

AFCS Series

Mounting Information

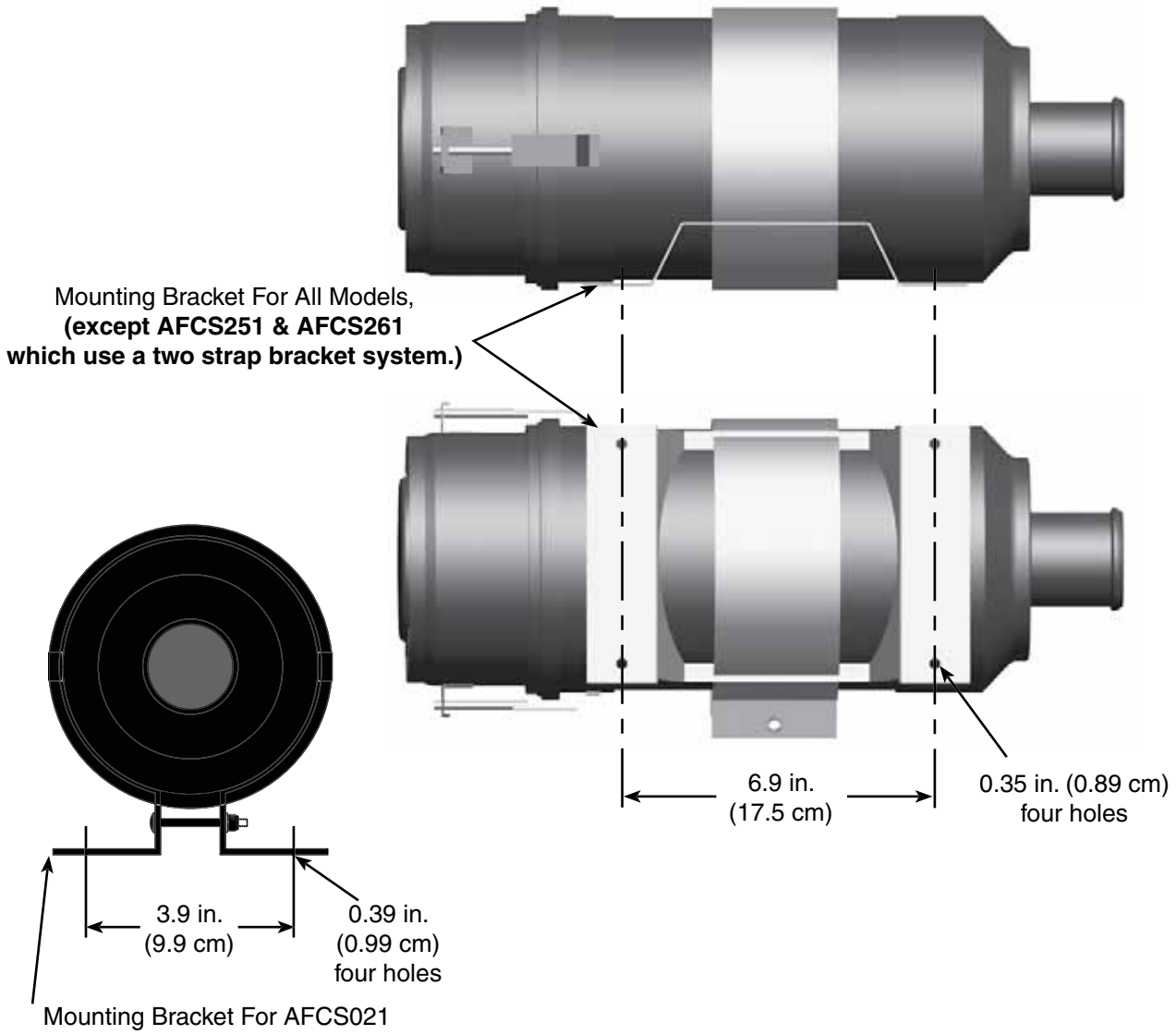

AFCS Primary Elements

Style 1

- Metal top and bottom end caps
- Interior and exterior screens
- Heavy-duty pleated paper
- Square-cut rubber gasket

Specifications	AR2201	AR6154
Length	18.0 in (45.7 cm)	18.1 in. (46.0 cm)
Diameter	13.8 in. (35.1 cm)	12.1 in. (30.7 cm)
Weight	11.6 lb (5.3 kg)	lb (kg)
Housing Part Number	AFCS351	AFCS311

Specifications	AR6277	AR6324	AR246501
Length	15.9 in (40.4 cm)	23.8 in. (60.5 cm)	19.2 in. (48.8 cm)
Diameter	10.4 in. (26.4 cm)	14.6 in. (37.1 cm)	9.5 in. (24.1 cm)
Weight	5.2 lb (2.4 kg)	11.0 lb (5.0 kg)	5.5 lb (2.5 kg)
Housing Part Number	AFCS251	AFCS431	AFCS261

AFCS Series

AFCS Primary Elements

Style 2

- **Metal top and bottom end caps**
- **Interior and exterior screens**
- **Heavy-duty pleated paper**
- **Beveled rubber gasket**

Specifications	AR6060	AR6067
Length	11.2 in (28.4 cm)	14.8 in. (37.6 cm)
Diameter	4.9 in. (12.4 cm)	7.8 in. (19.8 cm)
Weight	2.2 lb (1.0 kg)	2.8 lb (1.3 kg)
Housing Part Number	AFCS071	AFCS181

Specifications	AR6122	AR6144	AR6322	AR234401
Length	12.3 in. (31.2 cm)	13.3 in (33.8 cm)	8.3 in. (21.8 cm)	14.5 in. (36.8 cm)
Diameter	5.9 in. (15.0 cm)	6.5 in. (16.5 cm)	4.9 in. (12.4 cm)	8.9 in. (22.6 cm)
Weight	2.6 lb (1.2 kg)	3.5 lb (1.6 kg)	1.5 lb (0.7 kg)	4.4 lb (2.0 kg)
Housing Part Number	AFCS081	AFCS121	AFCS051	AFCS221

Questions? Contact Technical Support:
800 344 3286 or 209 521 7860 ext. 7555
e-mail: racortech@parker.com

AFCS Safety Elements

Style 1

- Metal top and bottom end caps
- Interior perforated tube
- Covered with a soft filtering media
- Square-cut & beveled rubber gaskets

Specifications	AS2207	AS6121
Length	22.0 in (55.8 cm)	18.1 in. (46.0 cm)
Diameter	10.2 in. (25.9 cm)	12.1 in. (30.7 cm)
Weight	3.3 lb (1.5 kg)	0.8 lb (0.4 kg)
Housing Part Number	AFCS351	AFCS071

Specifications	AS6123	AS6159	AS6180
Length	12.9 in (32.8 cm)	14.8 in. (37.6 cm)	13.6 in. (34.5 cm)
Diameter	2.7 in. (6.8 cm)	3.9 in. (9.9 cm)	3.3 in. (8.4 cm)
Weight	1.3 lb (0.6 kg)	1.5 lb (0.7 kg)	1.3 lb (0.6 kg)
Housing Part Number	AFCS081	AFCS181	AFCS121

AFCS Series

AFCS Safety Elements

Style 2

- Metal top and bottom end caps
- Interior and exterior screens
- Heavy-duty pleated paper
- Square-cut & beveled rubber gaskets

Specifications	AS6182	AS6220
Length	15.0 in (38.1 cm)	18.8 in. (47.8 cm)
Diameter	4.4 in. (11.2 cm)	5.0 in. (12.7 cm)
Weight	1.7 lb (0.8 kg)	2.2 lb (1.0 kg)
Housing Part Number	AFCS221	AFCS261

Specifications	AS6221	AS6316	AS6320	AS6323
Length	17.6 in. (44.7 cm)	14.9 in (37.8 cm)	15.2 in. (36.6 cm)	22.0 in. (55.9 cm)
Diameter	7.2 in. (18.3 cm)	5.5 in. (13.9 cm)	5.6 in. (14.2 cm)	10.2 in. (25.9 cm)
Weight	2.4 lb (1.1 kg)	1.7 lb (0.8 kg)	1.5 lb (0.7 kg)	3.3 lb (1.5 kg)
Housing Part Number	AFCS311	AFCS251	-	AFCS431

Questions? Contact Technical Support:
800 344 3286 or 209 521 7860 ext. 7555
e-mail: racortech@parker.com

AFHP Series

On Highway Precleaner

- **Air flow rates between 35 and 1411 cubic feet per minute (CFM).**
- **Outlet 2.0-8.0 in. (5.0-20.3 cm).**
- **Metal housing.**
- **Dynamic vane pre-cleaner.**
- **For agriculture & construction use.**

Applications

Racor Engine Air Precleaners are designed to be mounted on or connected to the air filter intake of a gasoline or diesel engine air cleaner. Their applications include all fast moving mobile equipment such as trucks, buses and recreational vehicles.

AFHP Series Precleaners consist of a steel housing with static vanes and a rust-proof rotor mounted on dual ball bearings. The perforated metal pre-screen at the inlet is standard. The outlet tube can be adapted with the supplied reducing sleeves for a variety of outlet choices. Racor Engine Air Precleaners are powder coated for a durable, corrosion-resistant finish.

How They Work

Racor Engine Air Precleaners are usually installed in place of the rain cap, dust bowl, or aspirated precleaner (exhaust system). In some applications, they can be mounted directly to the air cleaner. Air enters the system through a pre-screen that removes large debris. It then flows through static vanes causing the air to spin. As the air spins, centrifugal force separates dust, dirt, insects, rain and snow from the air stream.

The swirling air drives a high velocity rotor that acts as a blower evacuating contaminants through special discharge ports in the side of the unit. Only purified air flows to the air filter elements. Complete specifications are provided on the reverse of this page.

Questions? Contact Technical Support:
800 344 3286 or 209 521 7860 ext. 7555
e-mail: racortech@parker.com

Parker Racor

AFHP Series

AFHP Series Overview

Specifications	AFHP21	AFHP31	AFHP41
Airflow Range CFM	35 to 53 CFM (1.0 to 1.5 m^3/min)	53 to 124 CFM (1.5 to 3.5 m^3/min)	124 to 247 CFM (3.5 to 7.0 m^3/min)
Horsepower Range	30 HP (22 KW)	30 to 60 HP (22 to 45 KW)	60 to 120 HP (45 to 90 KW)
Height	4.0 in. (10.2 cm)	6.1 in. (15.5 cm)	7.0 in. (17.8 cm)
Diameter	5.2 in. (13.2 cm)	7.0 in. (17.8 cm)	8.5 in. (21.6 cm)
Outlet Size	2.0 in. (5.0 cm)	2.5-3.0 in. (6.3-7.6 cm)	2.5-3.2 in. (6.3-8.1 cm)
Weight	1.3 lbs (0.6 kg)	2.4 lbs (1.1 kg)	3.4 lbs (1.5 kg)

Specifications	AFHP42	AFHP81	AFHP82
Airflow Range CFM	124 to 247 CFM (3.5 to 7.0 m^3/min)	247 to 388 CFM (7.0 to 11.0 m^3/min)	247 to 388 CFM (7.0 to 11.0 m^3/min)
Horsepower Range	60 to 120 HP (45 to 90 KW)	120 to 160 HP (90 to 120 KW)	120 to 160 HP (90 to 120 KW)
Height	7.0 in. (17.8 cm)	7.8 in. (19.8 cm)	7.8 in. (19.8 cm)
Diameter	8.5 in. (21.6 cm)	9.6 in.(24.4 cm)	9.6 in.(24.4 cm)
Outlet Size	4-3.8-3.5-3.3 (10.2-9.5-8.9-8.2 cm)	3.0-3-2.8-2.5 in. (8.2-7.6-7.0-6.3 cm)	4-3.8-3.5-3.3 in. (10.2-9.5-8.9-8.2 cm)
Weight	3.5 lbs (1.6 kg)	4.2 lbs (1.9 kg)	4.3 lbs (2.0 kg)

Specifications	AFHP83	AFHP91	AFHP92
Airflow Range CFM	247 to 388 CFM (7.0 to 11.0 m^3/min)	388 to 530 CFM (11.0 to 15.0 m^3/min)	388 to 530 CFM (11.0 to 15.0 m^3/min)
Horsepower Range	120 to 160 HP (90 to 120 KW)	160 to 220 HP (120 to 165 KW)	220 to 300 HP (165 to 225 KW)
Height	7.8 in. (19.8 cm)	8.2 in. (20.8 cm)	8.2 in. (20.8 cm)
Diameter	9.6 in.(24.4 cm)	11.0 in. (27.9 cm)	11.0 in. (27.9 cm)
Outlet Size	4-3.8-3.5-3.3 in. (10.2-9.5-8.9-8.2 cm)	4.5-4.3-4-3.8 in. (11.4-10.9-10.2-9.7 cm)	5.3-5-4.8-4.5 in. (13.5-12.7-12.2-11.4 cm)
Weight	4.4 lbs (2.0 kg)	5.2 lbs (2.4 kg)	5.5 lbs (2.5 kg)

AFHP Series Overview

Specifications	AFHP111	AFHP112	AFHP211
Airflow Range CFM	530 to 776 CFM (15.0 to 22.0 m^3/min)	530 to 776 CFM (15.0 to 22.0 m^3/min)	776 to 1059 CFM (21.0 to 30.0 m^3/min)
Horsepower Range	220 to 300 HP (165 to 225 KW)	220 to 300 HP (165 to 225 KW)	300 to 400 HP (225 to 300 KW)
Height	7.9 in. (20.1 cm)	7.9 in. (20.1 cm)	9.1 in. (23.1 cm)
Diameter	12.2 in. (31.0 cm)	12.2 in. (31.0 cm)	14.2 in. (36.1 cm)
Outlet Size	5.3-5-4.8-4.5 in. (13.5-12.7-12.2-11.4 cm)	6-5.5-5.3-5 in. (15.2-14.0-12.7 cm)	6-5.5-5.3-5 in. (15.2-14.0-12.7 cm)
Weight	6.5 lbs (2.9 kg)	6.6 lbs (3.0 kg)	8.4 lbs (3.8 kg)

Specifications	AFHP212	AFHP411	AFHP412
Airflow Range CFM	776 to 1059 CFM (21.0 to 30.0 m^3/min)	1059 to 1411 CFM (30.0 to 40.0 m^3/min)	1059 to 1411 CFM (30.0 to 40.0 m^3/min)
Horsepower Range	300 to 400 HP (225 to 300 KW)	400 to 550 HP (300 to 410 KW)	400 to 550 HP (300 to 410 KW)
Height	9.1 in. (23.1 cm)	10.4 in. (26.4 cm)	10.4 in. (26.4 cm)
Diameter	14.2 in. (36.1 cm)	17.1 in. (43.4 cm)	17.1 in. (43.4 cm)
Outlet Size	7-6.8-6.5-6.2 in. (17.8-17.3-16.5-15.7 cm)	7-6.8-6.5-6.2 in. (17.8-17.3-16.5-15.7 cm)	8.0 in. (20.3 cm)
Weight	8.8 lbs (4.0 kg)	12.0 lbs (5.4 kg)	12.4 (5.6 kg)

Notes: cfm = $feet^3$ per minute
cmm = $meters^3$ per minute

AFHP Series

Part Description

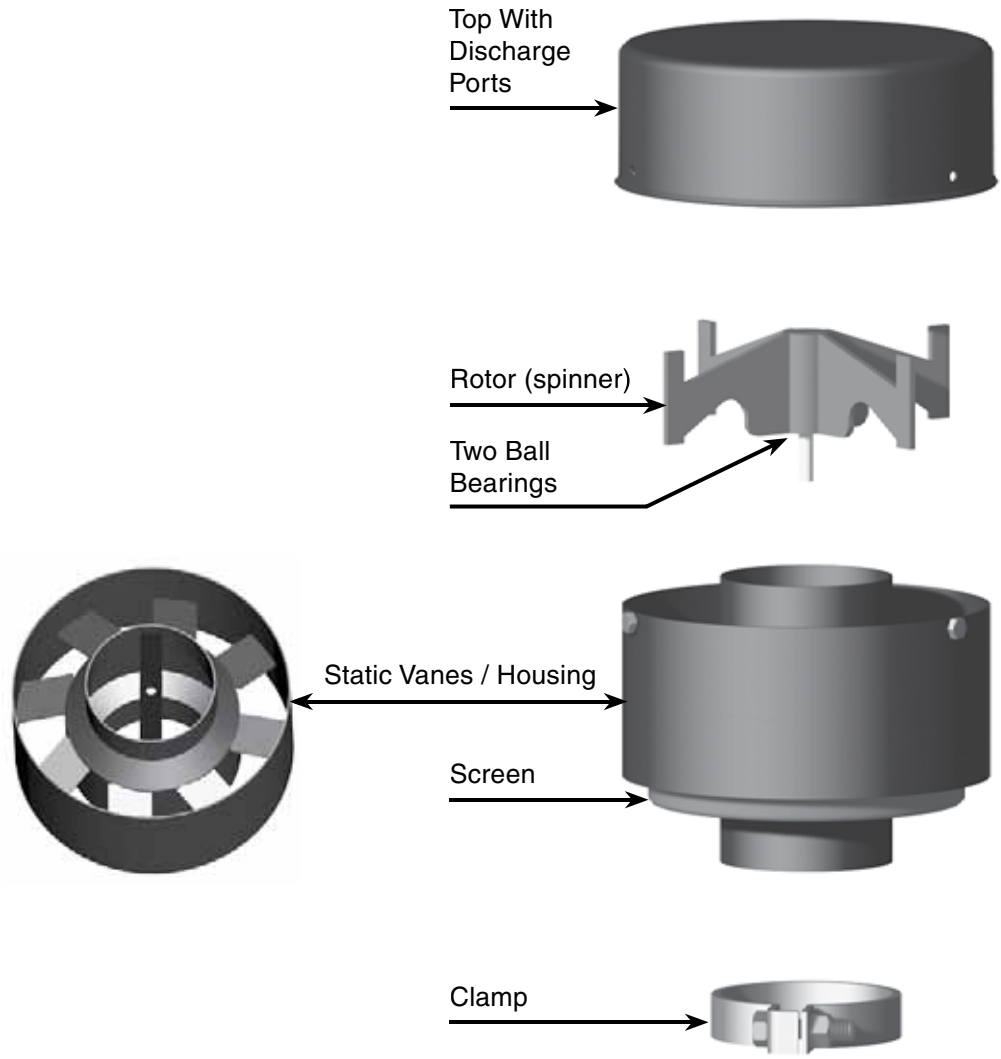

AFM Series

Marine Air Filters

- **Air flow rates between 800 and 1600 cubic feet per minute (CFM).**
- **Washable reusable Element.**
- **Restriction indicator port.**
- **CCV port.**

How They Work

The Racor marine air filter/silencer removes contaminants introduced into the air from both outside and inside the vessel. Sand, salt, carpet fibers and other contaminants are trapped in the oil-impregnated filter media. Turbo noise is reduced by the unique design of the air filter/silencer housing. An integral hose connection on the housing routes the clean blow-by from the CCV back into the engine.

Application

In order to determine the correct marine air filter application, you will need to know the marine air filter rating (AFR). You will need to provide the hose connection to turbo. Choose the correct marine air filter application per the following guideline: Verify that the marine air filter dimensions will fit into your engine room.

F

Questions? Contact Technical Support:
800 344 3286 or 209 521 7860 ext. 7555
e-mail: racortech@parker.com

Parker Racor

AFM Series

AFM Series Overview

Specifications	AF M408512	AF M501012	AF M601212
Flow Rate CFM	800 cfm (22.7 cmm)	1200 cfm (34.0 cmm)	1600 cfm (45.3 cmm)
Replacement Element	AF M8040	AF M8050	AF M8060
Height	12.5 in. (31.8 cm)	12.5 in. (31.8 cm)	12.5 in. (31.8 cm)
Depth	9.6 in. (24.4 cm)	11.5 in. (29.2 cm)	13.5 in. (34.3 cm)
Outlet Size	4 in. (10.1 cm)	5 in. (12.7 cm)	6 in. (15.2 cm)
Hose Barb (inlet)	1.0 in. (2.5 cm)	1.3 in. (3.3 cm)	1.3 in. (3.3 cm)
Weight	4.1 lbs (1.9 kg)	5.0 lbs (2.3 kg)	8.0 lbs (3.6 kg)

Installation Diagram

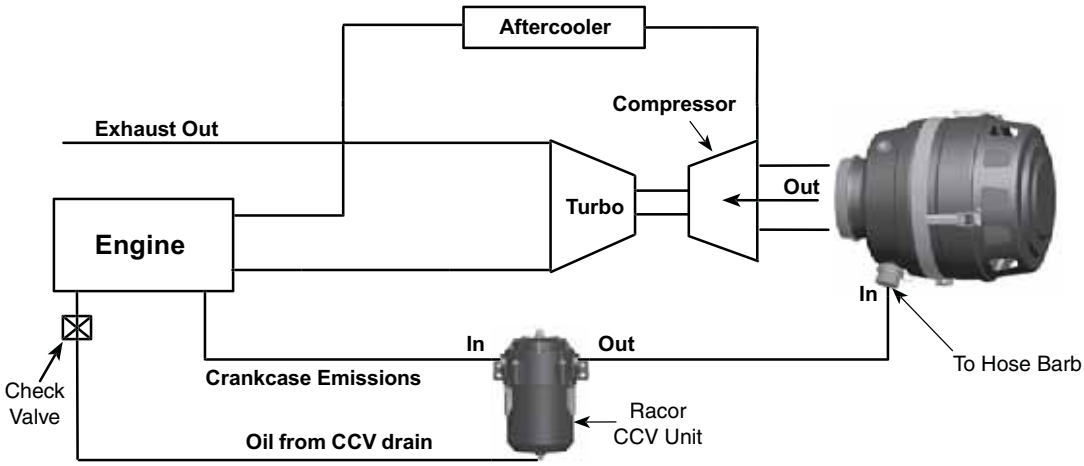

Questions? Contact Technical Support:
800 344 3286 or 209 521 7860 ext. 7555
e-mail: racortech@parker.com

Mounting Information

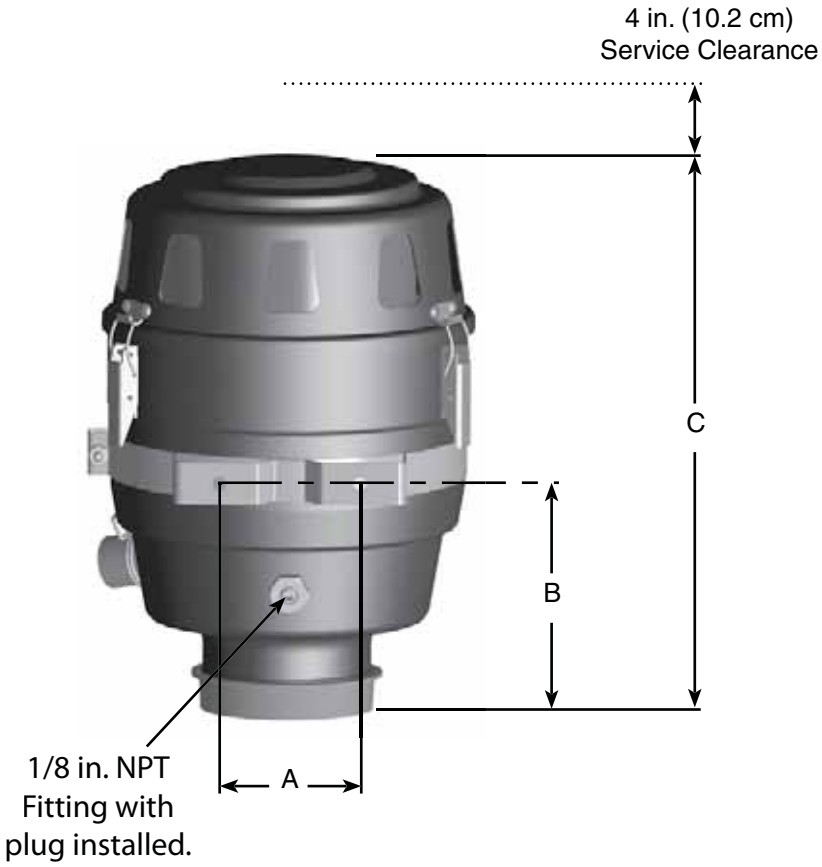

A	B	C
AF M408512: 3.4 in. (8.6 cm)	**AF M408512:** 5.0 in. (12.7 cm)	**AF M408512:** 12.5 in. (31.8 cm)
AF M501012: 3.4 in. (8.6 cm)	**AF M501012:** 5.0 in. (12.7 cm)	**AF M501012:** 12.5 in. (31.8 cm)
AF M601212: 6.0 in. (15.2 cm)	**AF M601212:** 4.9 in. (12.4 cm)	**AF M601212:** 12.5 in. (31.8 cm)

AFM Series

Customer Interface Drawing

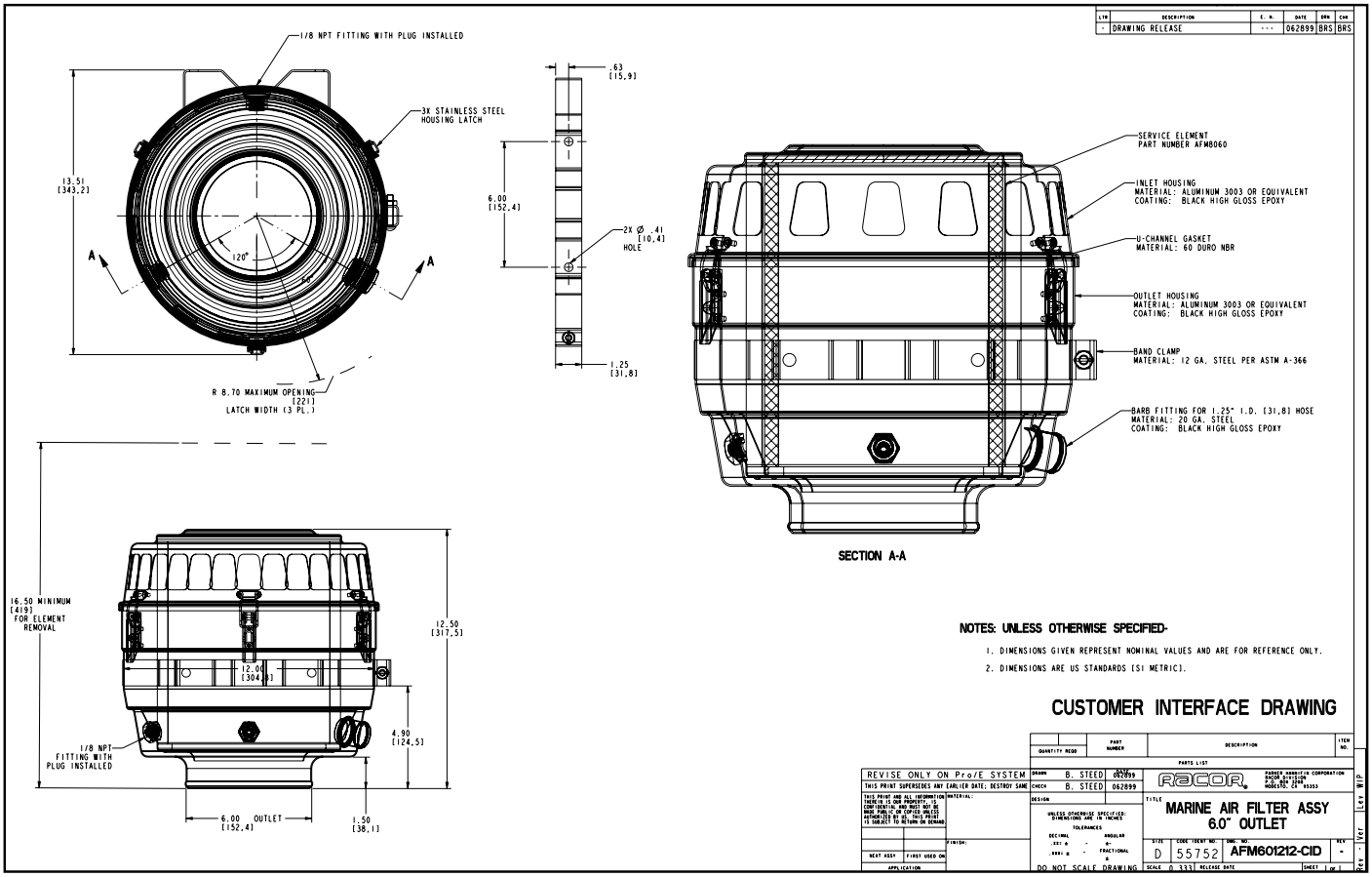

Questions? Contact Technical Support:
800 344 3286 or 209 521 7860 ext. 7555
e-mail: racortech@parker.com

Customer Interface Drawing

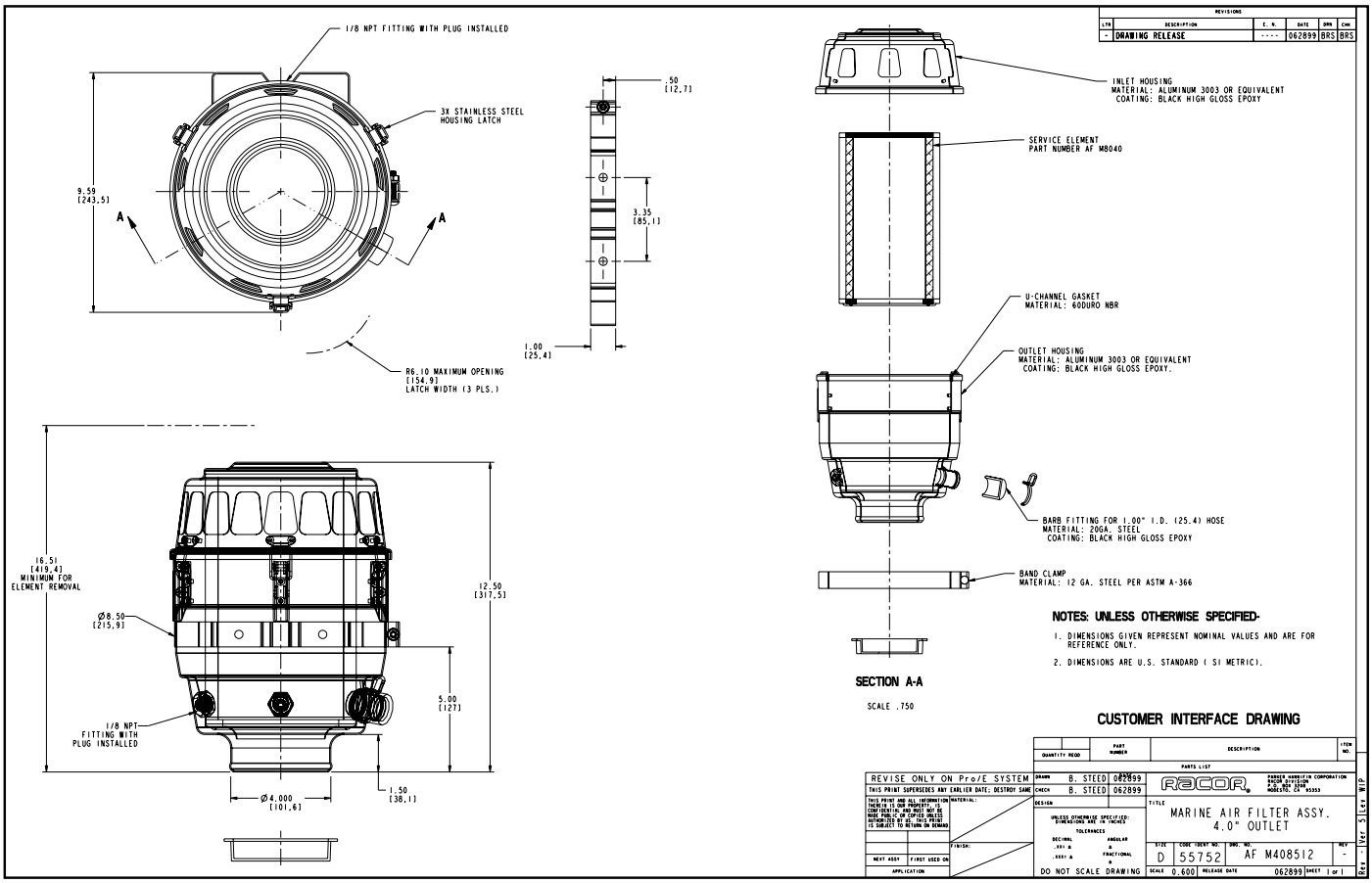

AFSF Series

Heavy-Duty Standard Air Filters

for On-Highway, Off-Highway and Stationary

Applications

Racor AFSF Standard Air Filters are designed to be connected to the air intake of the gasoline or diesel engine.

How They Work

Air flows through static vanes (plastic or metal) which causes the air to spin. Centrifugal force separates the heaviest impurities (dust, dirt, insects and other debris) from the air stream. These contaminants are discharged automatically through an integral evacuator valve. Only purified air flows to the air filter elements (primary and safety stages of filtration).

Typical Applications:

- **Agricultural Machinery**
- **Earth-Moving Equipment.**
- **Stationary Engines; Generator Sets.**
- **Trucks, Buses and Recreational Vehicles.**
- **Material Handling Equipment.**
- **Snow Removal Equipment and Street Sweepers**

Questions? Contact Technical Support:
800 344 3286 or 209 521 7860 ext. 7555
e-mail: racortech@parker.com

AFSF Series Overview

	AFSF4	AFSF6	AFSF8	AFSF12
Maximum Flow Rate	159 cfm (4.5 cmm)	212 cfm (6.0 cmm)	282 cfm (8.0 cmm)	423 cfm (12 cmm)
Maximum Horsepower	80	90	120	160
Replacement Elements: *(Primary)/(Safety)*	AR6060/AS6121	AR6122/AS6123	AR6144/AS6180	AR6067/AS6159
Length	15.2 in (38.6 cm)	16.7 in. (42.4 cm)	17.5 in. (44.5 cm)	18.8 in. (47.8 cm)
Diameter	6.6 in. (16.8 cm)	7.8 in. (19.8 cm)	8.5 in. (21.6 cm)	10.0 in. (25.4 cm)
Weight	8.4 lb (3.8 kg)	10.8 lb (4.9 kg)	11.7 lb (5.3 kg)	16.5 lb (7.5 kg)
Inlet Diameter	2.5 in. (6.4 cm)	3.0 in. (7.6 cm)	3.0 in. (7.6 cm)	4.0 in. (10.2 cm)
Outlet Diameter	2.5 in. (6.4 cm)	2.75 in. (7.0 cm)	3.0 in. (7.6 cm)	4.0 in. (10.2 cm)

F

Specifications	AFSF15	AFSF18	AFSF20	AFSF21
Maximum Flow Rate	529 cfm (15.0 cmm)	635 cfm (18.0 cmm)	706 cfm (20.0 cmm)	741 cfm (21.0 cmm)
Maximum Horsepower	180	210	250	280
Replacement Elements: *(Primary)/(Safety)*	AR234401/AS6182	AR6321/AS6320	AR6277/AS6316	AR246501/AS6220
Length	19.3 in (49.0 cm)	22.0 in. (55.9 cm)	21.3 in. (54.1 cm)	24.1 in. (61.2 cm)
Diameter	10.5 in. (26.7 cm)	11.4 in. (29.0 cm)	12.6 in. (32.0 cm)	12.6 in. (32.0 cm)
Weight	21.9 lb (9.9 kg)	27.6 lb (12.5 kg)	31.1 lb (14.1 kg)	33.9 lb (15.4 kg)
Inlet Diameter	4.0 in. (10.2 cm)	4.5 in. (11.4 cm)	5.3 in. (13.5 cm)	5.3 in. (13.5 cm)
Outlet Diameter	4.0 in. (10.2 cm)	4.0 in. (10.2 cm)	5.3 in. (13.5 cm)	5.1 in. (13.0 cm)

Specifications	AFSF310	AFSF350	AFSF430
Maximum Flow Rate	988 cfm (28.0 cmm)	1235 cfm (35.0 cmm)	1517 cfm (43.0 cmm)
Maximum Horsepower	320	380	450
Replacement Elements: *(Primary)/(Safety)*	AR6154/AS6221	AR2201/AS2207	AR6324/AS6323
Length	23.5 in (59.7 cm)	24.8 in. (63.0 cm)	28.9 in. (73.4 cm)
Diameter	15.4 in. (39.1 cm)	17.4 in. (44.2 cm)	18.0 in. (45.7 cm)
Weight	40.0 lb (18.1 kg)	46.3 lb (21.0 kg)	78.7 lb (35.7 kg)
Inlet Diameter	6.0 in. (15.2 cm)	6.0 in. (15.2 cm)	6.0 in. (15.2 cm)
Outlet Diameter	6.0 in. (15.2 cm)	6.0 in. (15.2 cm)	6.0 in. (15.2 cm)

Notes:
cfm = feet^3 per minute
cmm = meters^3 per minute

AFSF Series

Parts Description

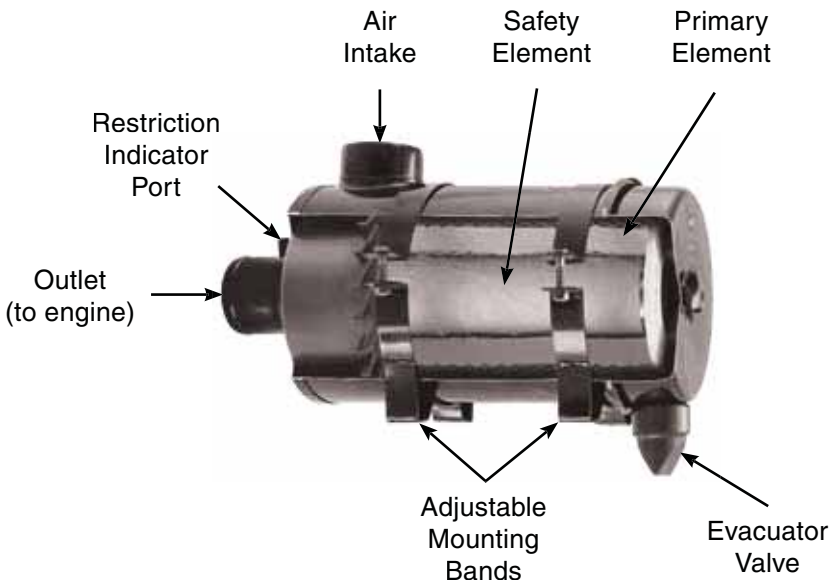

Pressure Drop at Maximum CFM (in. H_2O)

Assembly	With Safety Filter	Without Safety Filter
AFSF4	18.07	12.16
AFSF6	14.80	10.68
AFSF8	17.79	14.04
AFSF12	15.19	12.47
AFSF15	17.37	15.26
AFSF18	15.77	14.98
AFSF20	11.67	9.11
AFSF21	11.43	8.53
AFSF310	13.40	9.67
AFSF350	13.83	12.95
AFSF430	18.52	17.84

Mounting Information

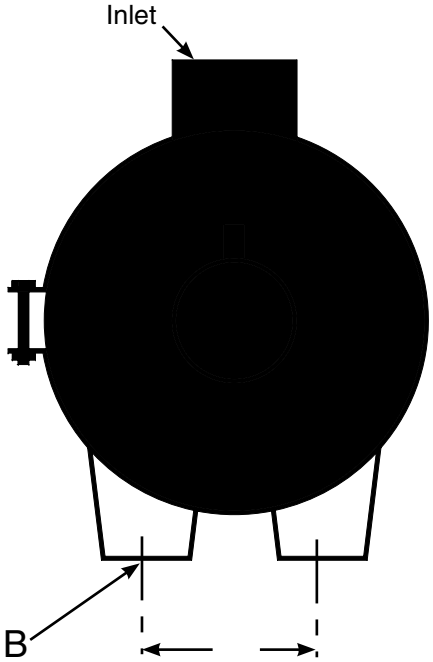

AFSF Unit	A	B
AFSF 4	4.7 in. (11.9 cm)	.31 in. (.79 cm)
AFSF 6	4.7 in. (11.9 cm)	.31 in. (.79 cm)
AFSF 8	4.7 in. (11.9 cm)	.31 in. (.79 cm)
AFSF 12	4.7 in. (11.9 cm)	.31 in. (.79 cm)
AFSF 15	5.5 in. (14.0 cm)	.39 in. (.99 cm)
AFSF 18	5.5 in. (14.0 cm)	.39 in. (.99 cm)
AFSF 20	5.5 in. (14.0 cm)	.39 in. (.99 cm)
AFSF 21	5.5 in. (14.0 cm)	.39 in. (.99 cm)
AFSF 310	7.9 in. (20.1 cm)	.39 in. (.99 cm)
AFSF 350	7.9 in. (20.1 cm)	.39 in. (.99 cm)
AFSF 430	7.9 in. (20.1 cm)	.39 in. (.99 cm)

AFSF Series

Customer Interface Drawing

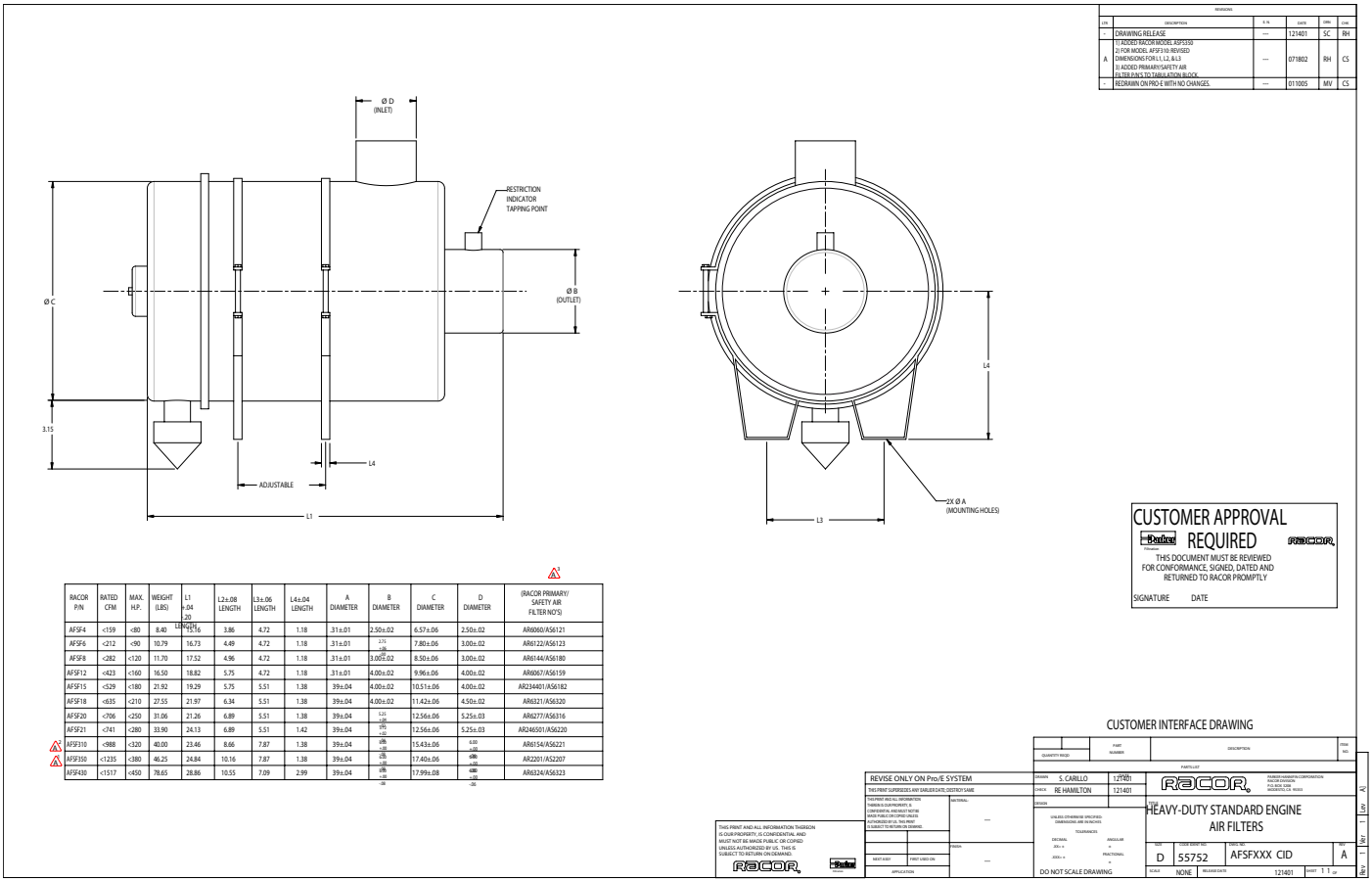

RACOR P/N	RATED CFM	MAX. H.P.	WEIGHT (LBS)	L1 +.04 -.20 LENGTH	L2±.08 LENGTH	L3±.06 LENGTH	L4±.04 LENGTH	A DIAMETER	B DIAMETER	C DIAMETER	D DIAMETER	(RACOR PRIMARY/ SAFETY AIR FILTER NO'S)
AFSF4	<159	<80	8.40	12.16	3.86	4.72	1.18	.31±.01	2.50±.02	6.57±.06	2.50±.02	AR6060/A56121
AFSF6	<212	<90	10.79	16.73	4.49	4.72	1.18	.31±.01	2.75 +.06 -.02	7.80±.06	3.00±.02	AR6122/A56123
AFSF8	<282	<120	11.70	17.52	4.96	4.72	1.18	.31±.01	3.00±.02	8.50±.06	3.00±.02	AR6144/A56180
AFSF12	<423	<160	16.50	18.82	5.75	4.72	1.18	.31±.01	4.00±.02	9.96±.06	4.00±.02	AR6067/A56159
AFSF15	<529	<180	21.92	19.29	5.75	5.51	1.38	39±.04	4.00±.02	10.51±.06	4.00±.02	AR234401/A56182
AFSF18	<635	<210	27.55	21.97	6.34	5.51	1.38	39±.04	4.00±.02	11.42±.06	4.50±.02	AR6321/A56320
AFSF20	<706	<250	31.06	21.26	6.89	5.51	1.38	39±.04	5.25 +.06 -.02	12.56±.06	5.25±.03	AR6277/A56316
AFSF21	<741	<280	33.90	24.13	6.89	5.51	1.42	39±.04	5.25 +.06 -.02	12.56±.06	5.25±.03	AR246501/A56220
AFSF310	<988	<320	40.00	23.46	8.66	7.87	1.38	39±.04	6.00 +.06 -.02	15.43±.06	6.00 +.06 -.02	AR6154/A56221
AFSF350	<1235	<380	46.25	24.84	10.16	7.87	1.38	39±.04	6.00 +.06 -.02	17.40±.06	6.00 +.06 -.02	AR2201/A52207
AFSF430	<1517	<450	78.65	28.86	10.55	7.09	2.99	39±.04	6.00 +.06 -.02	17.99±.08	6.00 +.06 -.02	AR6324/A56323

Questions? Contact Technical Support:
800 344 3286 or 209 521 7860 ext. 7555
e-mail: racortech@parker.com

AFSF Primary Elements

Style 1

- **Metal top and bottom end caps**
- **Interior and exterior screens**
- **Heavy-duty pleated paper**
- **Square-cut rubber gasket**

Specifications	AR2201	AR6154
Length	18.0 in (45.7 cm)	18.1 in. (46.0 cm)
Diameter	13.8 in. (35.1 cm)	12.1 in. (30.7 cm)
Weight	11.6 lb (5.3 kg)	N/A
Housing Part Number	AFSF350	AFSF310

	AR6277	AR6324	AR246501
Length	15.9 in (40.4 cm)	23.8 in. (60.5 cm)	19.2 in. (48.8 cm)
Diameter	10.4 in. (26.4 cm)	14.6 in. (37.1 cm)	9.5 in. (24.1 cm)
Weight	N/A	N/A	N/A)
Housing Part Number	AFSF20	AFSF430	AFSF21

AFSF Series

AFSF Primary Elements

Style 2

- **Metal top and bottom end caps**
- **Interior and exterior screens**
- **Heavy-duty pleated paper**
- **Beveled rubber gasket**

Specifications	AR6060	AR6067
Length	11.2 in (28.4 cm)	14.8 in. (37.6 cm)
Diameter	4.9 in. (12.4 cm)	7.8 in. (19.8 cm)
Weight	N/A	N/A
Housing Part Number	AFSF4	AFSF12

Specifications	AR6122	AR6144	AR6321	AR234401
Length	12.3 in. (31.2 cm)	13.3 in (33.8 cm)	16.9 in. (42.9 cm)	14.5 in. (36.8 cm)
Diameter	5.9 in. (15.0 cm)	6.5 in. (16.5 cm)	9.3 in. (23.6 cm)	8.9 in. (22.6 cm)
Weight	N/A	N/A	N/A	N/A)
Housing Part Number	AFSF6	AFSF8	AFSF18	AFSF15

Questions? Contact Technical Support:
800 344 3286 or 209 521 7860 ext. 7555
e-mail: racortech@parker.com

AFSF Safety Elements

Style 1

- **Metal top and bottom end caps**
- **Interior perforated tube**
- **Covered with a soft filtering media**
- **Square-cut & beveled rubber gaskets**

Specifications	AS2207	AS6121
Length	22.0 in (55.8 cm)	18.1 in. (46.0 cm)
Diameter	10.2 in. (25.9 cm)	12.1 in. (30.7 cm)
Weight	3.3 lb (1.5 kg)	0.8 lb (0.4 kg)
Housing Part Number	AFSF350	AFSF4

Specifications	AS6123	AS6159	AS6180
Length	12.9 in (32.8 cm)	14.8 in. (37.6 cm)	13.6 in. (34.5 cm)
Diameter	2.7 in. (6.8 cm)	3.9 in. (9.9 cm)	3.3 in. (8.4 cm)
Weight	1.3 lb (0.6 kg)	1.5 lb (0.7 kg)	1.3 lb (0.6 kg)
Housing Part Number	AFSF6	AFSF12	AFSF8

AFSF Series

AFSF Safety Elements

Style 2

- Metal top and bottom end caps
- Interior and exterior screens
- Heavy-duty pleated paper
- Square-cut & beveled rubber gaskets

Specifications	AS6182	AS6220
Length	15.0 in (38.1 cm)	18.8 in. (47.8 cm)
Diameter	4.4 in. (11.2 cm)	5.0 in. (12.7 cm)
Weight	1.7 lb (0.8 kg)	2.2 lb (1.0 kg)
Housing Part Number	AFSF15	AFSF21

Specifications	AS6221	AS6316	AS6320	AS6323
Length	17.6 in. (44.7 cm)	14.9 in (37.8 cm)	15.2 in. (36.6 cm)	22.0 in. (55.9 cm)
Diameter	7.2 in. (18.3 cm)	5.5 in. (13.9 cm)	5.6 in. (14.2 cm)	10.2 in. (25.9 cm)
Weight	2.4 lb (1.1 kg)	1.7 lb (0.8 kg)	1.5 lb (0.7 kg)	3.3 lb (1.5 kg)
Housing Part Number	AFSF310	AFSF20	AFSF18	AFSF430

Questions? Contact Technical Support:
800 344 3286 or 209 521 7860 ext. 7555
e-mail: racortech@parker.com

Cabin Air Filters

Presently, 40% of all vehicles in use have a cabin air filter installed. These filters are used to remove dust, pollen, mold spores, engine exhaust and other gases from the cabin air. The filter should be changed out every 15,000 miles.

By servicing the filter, the heater and evaporator will be protected from corrosion and the air in the cabin compartment will be more healthy for the occupants.

Side View

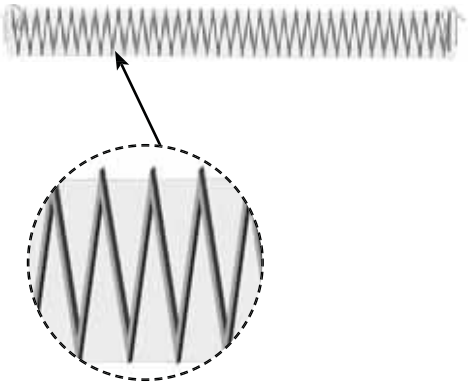

Specifications	AFC1000	AFC1001	AFC2000	AFC2001
Application	General Motors	General Motors	Ford Motor Co.	Ford Motor Co.
Media	Paper/Carbon	Paper	Paper/Carbon	Paper
Height	5.3 in. (13.5 cm)	5.4 in. (13.7 cm)	10.4 in. (26.4 cm)	10.4 in. (26.4 cm)
Width	9.1 in. (23.1 cm)	9.4 in. (23.9 cm)	9.0 in. (22.9 cm)	9.0 in. (22.9 cm)
Depth	0.9 in. (2.3 cm)	0.9 in. (2.3 cm)	1.1 in. (2.8 cm)	1.1 in. (2.8 cm)

EA Series

EA Series Air Filters

Replacement Filters

Product Information and Specifications

Racor introduces a line of replacement air filters for its EA and EAVLR series air cleaners. These primary and safety filters are high efficiency urethane radial seal filters designed to perform at the highest level to protect your investment. They are also direct replacements for common air cleaner designs from other filter manufacturers.

EA Series Replacement Filters

The most important components of any heavy duty air cleaner are the primary and secondary filter. Without a high quality replacement filter, the air cleaner cannot perform the job it is designed to do. Racor replacement filters for the EA and EAVLR air cleaners are designed and manufactured with the highest quality materials, including high efficiency, high capacity filter media, and reliable, durable urethane end caps.

Features:

- **High Efficiency media**
- **Industry standard radial seal design**
- **Urethane encapsulation**
- **High dust holding capacity**

Part No.		Enginaire		Donaldson		Baldwin		Fleetguard		Luberfiner	
Primary	Safety	Primary	Safety	Primary	Safety	Primary	Safety	Primary	Safety	Primary	Safety
EAPE68300	EASE68340	2s-E1	2s-E2	P822686	P535396	RS3715	RS3930	AF25538	N/A	LAF8388	LAF22056
		68300	68340								
EAPE68310	EASE68350	2-E1	2-E2	P772578	P775298	RS3546	RS3547	AF25539	AF25434	LAF8147	LAF5844
		68310	68350								
EAPE68315	EASE68355	2.5-E1	2.5-E2	P822768	P822769	RS3702	RS3703	AF25436	AF25497	LAF8143	LAF8114
		68315	68355								
EAPE68320	EASE68360	3-E1	3-E2	P772579	P775300	RS3542	RS3543	AF25526	AF25484	LAF8148	LAF9332
		68320	68360								
EAPE68330	EASE68370	3.75-E1	3.75-E2	P772580	P775302	RS3544	RS3545	AF25352	AF25485	LAF4544	LAF4545
		68330	68370								
EAPE68332	EASE68372	4.5-E1	4.5-E2	P777588	P777639	N/A	RS3885	AF25504	AF25491	N/A	LAF5932
		68332	68372								
EAPE68630	EASE68631	6-E1	6-E2	N/A	N/A	N/A	N/A	N/A	N/A	N/A	N/A
		68630	68631								
EAPE68645	EASE68638	7-E1	7-E2	N/A	N/A	N/A	N/A	N/A	N/A	N/A	N/A
		68645	68638								

Questions? Contact Technical Support:
800 344 3286 or 209 521 7860 ext. 7555
e-mail: racortech@parker.com

EACP Series

Composite Dynamic Air Precleaners

EACP Series

Equipment operated in dusty environments require more periodic maintenance and experience more down time. The filter in the air cleaner requires more frequent replacement as the level of dust increases. A plugged filter reduces power, fuel economy, and engine component life. Racor composite dynamic air precleaners dramatically increase the life of the air filter, reduce overall intake system restriction, increase equipment productivity, reduce downtime, and save money.

Features

- **High efficiency**
- **Light weight**
- **Durable**
- **Rust/corrosion resistant**
- **UV Resistant**
- **Sealed bearings**
- **No maintenance**
- **Limited Lifetime Warranty**

Dimensions

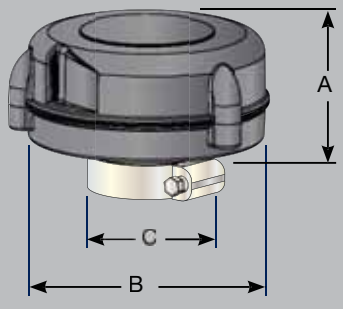

Product Information and Specifications

Racor composite dynamic air precleaners separate solid dust and debris from the air stream before they reach the main air cleaner. They are installed in place of the rain cap, dust bowl, or aspirated precleaner (exhaust system). In some applications, they can be mounted directly to the air cleaner. Air enters through static vanes at the bottom periphery of the precleaner causing the air to spin and drive a high velocity rotor, which in turn acts as a blower that centrifugally forces dust, dirt, insects, water, and snow through a discharge port. Pre-cleaned air then flows through the outlet to the main air cleaner system.

Racor composite precleaners extend the life of the primary air filter from 5 to over 12 times, greatly increasing the air cleaner service interval, reducing operating cost, and increasing equipment uptime.

Racor Composite Precleaners range in size to fit intakes from 1 1/2" to 6" diameter to handle air flows from 3 to 900 CFM. They have been independently tested and proven superior. Racor Composite Precleaners are constructed with specially formulated materials to withstand heat, cold, vibration, UV Radiation, and impact.

Part No.	Air Intake ID C		Airflow				Dimensions				Weight	
			cfm		m^3/min		in.		cm			
	in.	cm	Min	Max	Min	Max	A	B	A	B	lbs	kg
EACP61508	1.5	3.8	3	20	0.08	0.6	2.3	3.6	5.8	9.1	0.42	0.19
EACP61511	2.0	5.1	20	100	0.57	4.3	3.0	4.8	7.6	12.2	0.55	0.25
EACP61513	3.0	7.6	75	250	2.1	7.1	4.0	6.9	10.1	17.5	1.5	0.68
EACP61515	4.0	10.1	150	465	4.3	13.2	5.3	9.4	13.5	23.9	2.83	1.28
EACP61521	4.5	11.4	250	600	7.1	17.0	7.0	10.8	17.8	27.4	3.7	1.68
EACP61523	5.0	12.7	250	600	7.1	17.0	7.0	10.8	17.8	27.4	3.7	1.68
EACP61519	6.0	15.2	250	600	7.1	17.0	7.0	10.8	17.8	27.4	3.7	1.68
EACP61517	6.0	15.2	350	1100	9.9	31.1	6.6	12.0	16.8	30.5	5.67	2.57

Questions? Contact Technical Support:
800 344 3286 or 209 521 7860 ext. 7555
e-mail: racortech@parker.com

Parker Racor

EAF Series

EAF Series

Composite Heavy Duty Air Cleaners

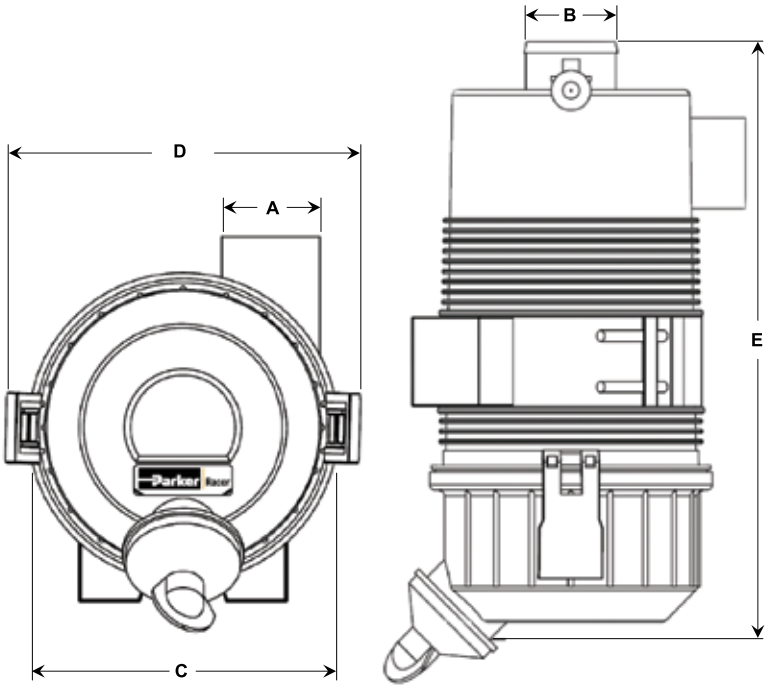

EAF Series

Heavy duty equipment requires heavy duty engine air intake filtration. Heavy duty composite air cleaners are designed and built to meet the requirements for gasoline and diesel powered agricultural, construction, turf care, forestry, and mining equipment. Designed for high dust environments with excessive vibration and extreme temperatures. Composite air cleaners are the economical choice for your heavy duty applications.

Features

- **High efficiency dust holding capacity**
- **UV resistant high-strength polymer composite**
- **Tool-less service**
- **Working temperature -40°C to 100°C (-40°F to 212°F)**
- **Industry standard radial seal filter**
- **Mounted vertically or horizontally**
- **Spring loaded mounting bracket**
- **Dual position restriction indicator port mounting**

Part No.	Safety Element	Flow Rate at Initial Restriction 6 in. H_2O		8 in. H_2O		10 in. H_20		A O.D. Inlet		B O.D. Outlet		C		D		E	
		cfm	m^3/min	cfm	m^3/min	cfm	m^3/min	in.	cm	in.	cm	in.	cm	in.	cm	in.	cm
EAF68110	No	75	2.1	90	2.5	105	3.0	2.0	5.1	1.8	4.6	4.8	12.2	6.1	15.5	9.0	22.9
EAF68111	Yes	65	1.8	75	2.1	85	2.4	2.0	5.1	1.8	4.6	4.8	12.2	6.1	15.5	9.0	22.9
EAF68120	No	100	2.8	115	3.3	130	3.7	2.0	5.1	2.0	5.1	5.8	14.7	7.1	18.0	13.4	34.0
EAF68130	Yes	90	2.5	105	3.0	115	3.3	2.0	5.1	2.0	5.1	5.8	14.7	7.1	18.0	13.4	34.0
EAF68132	No	150	4.2	175	5.0	195	5.5	2.5	6.4	2.5	6.4	6.9	17.5	8.2	20.8	14.1	35.8
EAF68133	Yes	145	4.1	165	4.7	185	5.2	2.5	6.4	2.5	6.4	6.9	17.5	8.2	20.8	14.1	35.8
EAF68140	No	160	4.5	190	5.4	210	5.9	3.0	7.6	3.0	7.6	7.2	18.3	8.6	21.8	14.6	37.1
EAF68150	Yes	150	4.2	170	4.8	190	5.4	3.0	7.6	3.0	7.6	7.2	18.3	8.6	21.8	14.6	37.1
EAF68160	No	250	7.1	290	8.2	325	9.2	3.8	9.7	3.5	8.9	8.4	21.3	9.7	24.6	15.6	39.6
EAF68170	Yes	225	6.4	260	7.4	280	7.9	3.8	9.7	3.5	8.9	8.4	21.3	9.7	24.6	15.6	39.6
EAF68175	No	375	10.6	425	12.0	475	13.5	4.5	11.4	4.0	10.2	10.6	26.9	11.9	30.2	19.1	48.5
EAF68175-1	Yes	325	9.2	375	10.6	425	12.0	4.5	11.4	4.0	10.2	10.6	26.9	11.9	30.2	19.1	48.5
EAF68178	No	600	17.0	685	19.4	770	21.8	6.0	15.2	5.0	12.7	12.2	31.0	13.5	34.3	22.0	55.9
EAF68179	Yes	500	14.2	565	16.0	630	17.8	6.0	15.2	5.0	12.7	12.2	31.0	13.5	34.3	22.0	55.9
EAF68182	No	800	22.7	910	25.8	1060	30.0	7.0	17.8	6.0	15.2	15.5	39.4	16.8	42.7	21.5	54.6
EAF68185	Yes	710	20.1	830	23.5	960	27.2	7.0	17.8	6.0	15.2	15.5	39.4	16.8	42.7	21.5	54.6

Questions? Contact Technical Support:
800 344 3286 or 209 521 7860 ext. 7555
e-mail: racortech@parker.com

EAF Series Air Cleaner

Replacement Filter Guide

Part No.	Primary	Safety
EAF68110	EAPE68300	N/A
EAF68111	EAPE68300	EASE68340
EAF68120	EAPE68310	N/A
EAF68130	EAPE68310	EASE68350
EAF68132	EAPE68315	N/A
EAF68133	EAPE68315	EASE68355
EAF68140	EAPE68320	N/A
EAF68150	EAPE68320	EASE68360
EAF68160	EAPE68330	N/A
EAF68170	EAPE68330	EASE68370
EAF68175	EAPE68332	N/A
EAF68175-1	EAPE68332	EASE68372
EAF68178	EAPE68630	N/A
EAF68179	EAPE68630	EASE68631
EAF68182	EAPE68645	N/A
EAF68185	EAPE68645	EASE68638

EAVLR Series

EAVLR Series

Composite Very Low Restriction Heavy Duty Air Cleaners

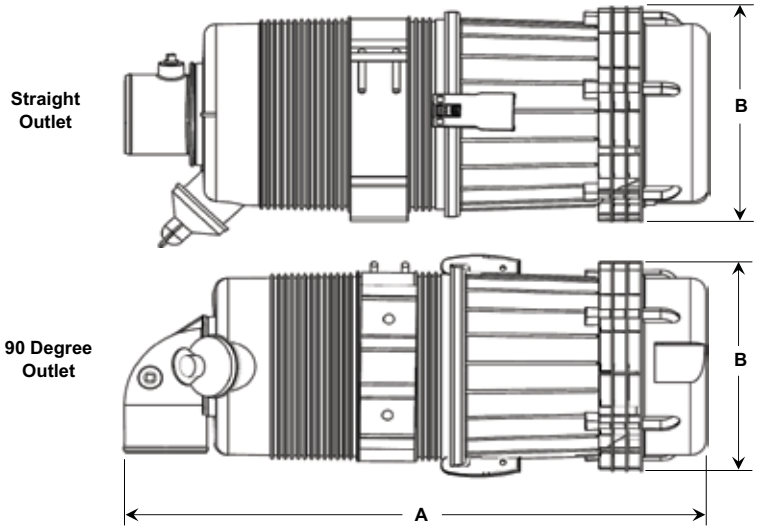

EAVLR Series

The VLR incorporates a proven dynamic precleaner and additional static precleaning action into a dual filter canister. They are available with straight or 90 degree outlet, a primary filter only, or with primary and safety filter. They can be mounted horizontally or vertically and rotated in any direction, as long as the dust evacuator valve is pointed downward.

Features

- **High efficiency and dust holding capacity**
- **Durable high strength polymer composite construction**
- **Rust and corrosion resistant**
- **UV resistant**
- **Industry standard radial seal filter**
- **Intake flow rates from 50 to 700 cfm**

Part No.	Outlet Type	Safety Element	Initial Restriction 6 in. H_2O		8 in. H_2O		10 in. H_20		Outlet OD		A		B	
			cfm	m³/min	cfm	m³/min	cfm	m³/min	in.	cm	in.	cm	in.	cm
EAVLR68193S	Straight	No	85	2.4	102	2.9	119	3.4	1.8	4.6	13.3	33.8	5.4	13.7
EAVLR68193S2	Straight	Yes	66	1.9	78	2.2	88	2.5	1.8	4.6	13.3	33.8	5.4	13.7
EAVLR68193	90°	No	74	2.1	88	2.5	98	2.8	1.8	4.6	12.6	32.0	5.4	13.7
EAVLR68193-2	90°	Yes	58	1.6	68	1.9	88	2.5	1.8	4.6	12.6	32.0	5.4	13.7
EAVLR68194	Straight	No	100	2.8	115	3.3	132	3.7	2.0	5.1	19.8	50.3	6.3	16.0
EAVLR68199S	Straight	Yes	85	2.4	100	2.8	114	3.2	2.0	5.1	19.8	50.3	6.3	16.0
EAVLR68190	90°	No	82	2.3	95	2.7	105	3.0	2.0	5.1	18.5	47.0	6.3	16.0
EAVLR68199	90°	Yes	75	2.1	88	2.5	97	2.7	2.0	5.1	18.5	47.0	6.3	16.0
EAVLR68197S	Straight	No	178	5.0	200	5.7	230	6.5	2.5	6.4	21.0	53.3	6.3	16.0
EAVLR68197S2	Straight	Yes	162	4.6	188	5.3	212	6.0	2.5	6.4	21.0	53.3	6.3	16.0
EAVLR68197	90°	No	145	4.1	170	4.8	188	5.3	2.5	6.4	20.6	52.3	6.3	16.0
EAVLR68197-2	90°	Yes	138	3.9	161	4.6	181	5.1	2.5	6.4	20.6	52.3	6.3	16.0
EAVLR68195S1	Straight	No	182	5.2	214	6.1	238	6.7	3.0	7.6	20.4	51.8	8.2	20.8
EAVLR68195S	Straight	Yes	166	4.7	194	5.5	222	6.3	3.0	7.6	20.4	51.8	8.2	20.8
EAVLR68195-1	90°	No	160	4.5	185	5.2	209	5.9	3.0	7.6	21.0	53.3	8.2	20.8
EAVLR68195	90°	Yes	150	4.2	177	5.0	194	5.5	3.0	7.6	21.0	53.3	8.2	20.8
EAVLR68191	Straight	No	310	8.8	360	10.2	410	11.6	4.0	10.2	17.8	45.2	10.0	25.4
EAVLR68198-1	Straight	No	510	14.4	580	16.4	670	19.0	5.0	12.7	32.0	81.3	14.3	36.3
EAVLR68189-2	Straight	Yes	475	13.5	550	15.6	625	17.7	5.0	12.7	32.0	81.3	14.3	36.3
EAVLR68198	Straight	No	520	14.7	650	18.4	730	20.7	6.0	15.2	32.0	81.3	14.3	36.3
EAVLR68196-3	Straight	Yes	510	14.4	600	17.0	675	19.1	6.0	15.2	32.0	81.3	14.3	36.3

Questions? Contact Technical Support:
800 344 3286 or 209 521 7860 ext. 7555
e-mail: racortech@parker.com

EAVLR Replacement Filters

Composite Very Low Restriction Heavy Duty Air Cleaners

Part No.	Primary	Safety
EAVLR68193S	EAPE68300	N/A
EAVLR68193S2	EAPE68300	EASE68340
EAVLR68193	EAPE68300	N/A
EAVLR68193-2	EAPE68300	EASE68340
EAVLR68194	EAPE68310	N/A
EAVLR68199S	EAPE68310	EASE68350
EAVLR68190	EAPE68310	N/A
EAVLR68199	EAPE68310	EASE68350
EAVLR68197S	EAPE68320	N/A
EAVLR68197S2	EAPE68320	EASE68360
EAVLR68197	EAPE68320	N/A
EAVLR68197-2	EAPE68320	EASE68360
EAVLR68195S1	EAPE68320	EASE68360
EAVLR68195S	EAPE68320	EASE68360
EAVLR68195-1	EAPE68320	N/A
EAVLR68195	EAPE68320	EASE68360
EAVLR68191	EAPE68191*	N/A
EAVLR68198-1	EAPE68410-1*	N/A
EAVLR68189-2	EAPE68410-1*	EASE68410-2*
EAVLR68198	EAPE68410-1*	N/A
EAVLR68196-3	EAPE68410-1*	EASE68410-2*

*For special order call Racor.

ECO® Series

Heavy Duty Air Cleaners

That's what Racor air filtration is all about. Because when engines breathe easy they perform better, and with more power, more torque and with improved fuel economy.

The Racor lineup includes heavy duty air cleaners and pre-cleaners, marine filter/silencers, cabin air filters and replacement filters. All are super high efficiency, with engineered, application-specific media that improves performance as it extends service life.

Whatever your application, there's a Racor Air Filtration System that will help you and your engine breathe easy and save you money.

ECO II

ECO III

ECO-BC

ECO-CM

ECO-LL

ECO-SE

And Others ...

Questions? Contact Technical Support:
800 344 3286 or 209 521 7860 ext. 7555
e-mail: racortech@parker.com

ECO II Series

ECO II Series Features

- **The first cone-type filter element that is both tapered and offset.**
- **Beaded outlet.**
- **More usable media area than conventional filters.**
- **Paper pleats are permanently locked in place for reliable performance.**
- **Water-resistant media provides three to five times longer filter life than conventional designs.**
- **Media is SAE rated to provide average efficiency of 99.9% (SAE J726C), with no seals or gaskets to replace.**

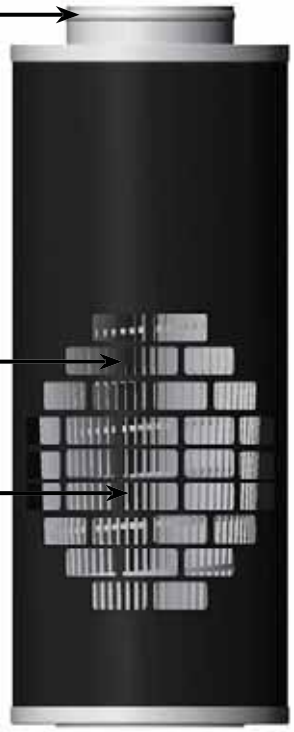

Requires no additional room to service element.

The ECO II is designed to lower the cost of replacing elements, this is due to its two piece design used for an under the hood truck application. The Inlet Adapter is a separate piece, this allows it to stay on the truck. (Inlet Adapter is sold separately).

The ECO II used without the Inlet Adapter has become the standard in the Generator Set market.

Air Flow is outside-in with water drain holes around the perimeter.

ECO II Series

ECO II Series Overview

Specifications	071338001	071338002	071338003	071338004
Air Flow Rate	750-1100 cfm (21.2-31.1 cmm)	920-1380 cfm (26.0-39.1 cmm)	1120-1600 cfm (31.7-45.3 cmm)	1140-1600 cfm (32.3-45.3 cmm)
Height	24.0 in. (61.0 cm)	24.0 in. (61.0 cm)	24.0 in. (61.0 cm)	18.0 in. (45.7 cm)
Diameter	10 in. (25.4 cm)	11.0 in. (27.9 cm)	13.5 in. (34.3 cm)	13.5 in. (34.3 cm)
Outlet	6.0 in. (15.2 cm)	7.0 in. (17.8 cm)	7.0 in. (17.8 cm)	7.0 in. (17.8 cm)
Inlet Adapter	No	No	No	No
Weight	12.5 lbs (5.7 kg)	16.2 lbs (7.4 kg)	19.0 lbs (8.6 kg)	16.9 lbs (7.7 kg)

Specifications	071338005	071338007	071338008
Air Flow Rate	1140-1600 cfm (32.3-45.3 cmm)	920-1390 cfm (26.0-39.4 cmm)	710-1070 cfm (20.1-30.3 cmm)
Height	15.0 in. (38.1 cm)	24.0 in. (61.0 cm)	18.0 in. (45.7 cm)
Diameter	13.5 in. (34.3 cm)	11.0 in. (27.9 cm)	9.8 in. (24.9 cm)
Outlet	7.0 in. (17.8 cm)	7.0 in. (17.8 cm)	6.0 in. (15.2 cm)
Inlet Adapter	No	No	No
Weight	14.0 lbs (6.3 kg)	14.5 lbs (6.5 kg)	9.1 lbs (4.1 kg)

Specifications	071338009	071338010	071338013
Air Flow Rate	1210-1910 cfm (34.3-54.1 cmm)	N/A	N/A
Height	24.0 in. (61.0 cm)	18.0 in. (45.7 cm)	24.0 in. (61.0 cm)
Diameter	13.5 in. (34.3 cm)	10.9 in. (27.7 cm)	13.4 in. (34.0 cm)
Outlet	7.0 in. (17.8 cm)	7.0 in. (17.8 cm)	8.0 in. (20.3 cm)
Inlet Adapter	No	No	No
Weight	9.0 lbs (4.0 kg)	N/A	N/A

Notes:
cfm = feet^3 per minute
cmm = meters^3 per minute

Questions? Contact Technical Support:
800 344 3286 or 209 521 7860 ext. 7555
e-mail: racortech@parker.com

ECO II Adapters

- **Installs directly on ECO II element.**
- **Sized by matching element diameter.**

Part Number	Inlet Size	Weight
071656001	11” I.D. 6” Inlet	3.0 lbs (1.4 kg)
071656002	11” I.D. 7” Inlet	3.0 lbs (1.4 kg)
072994000	13” I.D. 7” Inlet	3.0 lbs (1.4 kg)

ECO II Series

ECO II Water Separator

Air cleaner must be installed with element horizontal with drain tube pointing down. Drain tube should be vertical within ±5°. Element may be reversed in inlet transition to place outlet at opposite end.

Effective operation of the drain requires the negative pressure at The inlet to the water separator to be no more than 3.75 Inches.

- **No service.**
- **Up to 80% water separation.**
- **Must be installed horizontal.**
- **Drain tube installed.**

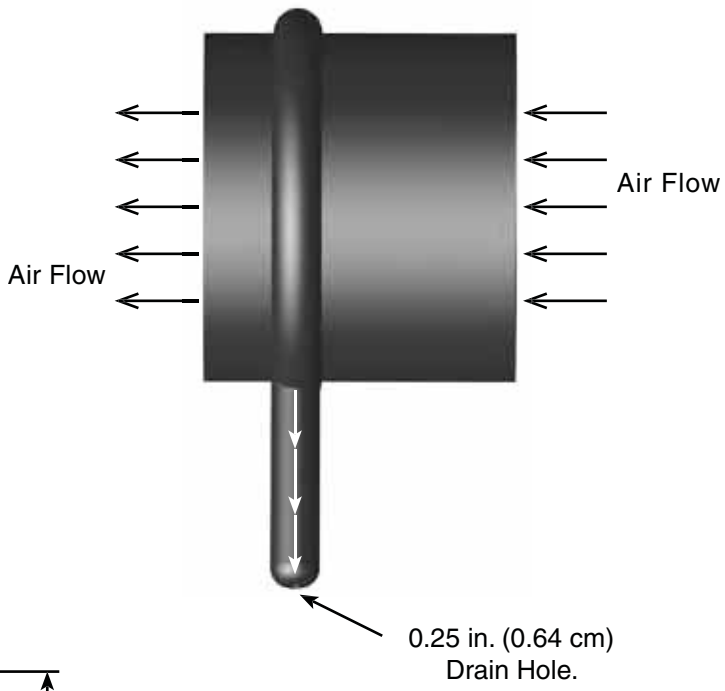

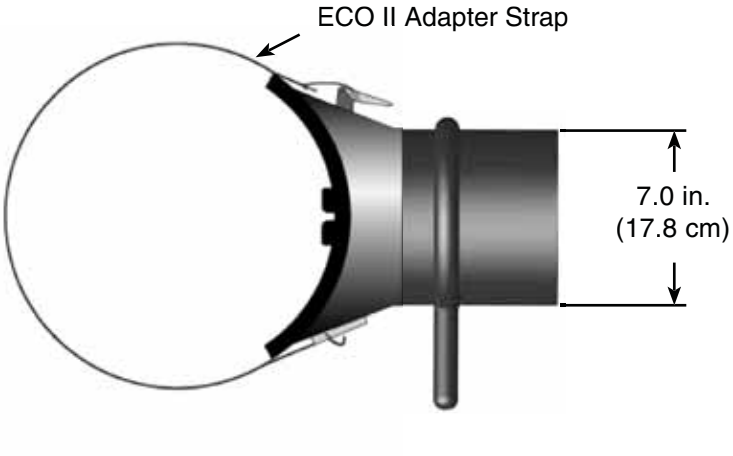

Specification	072995002
Diameter	7.0 in. (17.8 cm)
Height	13.5 in. (34.3 cm)
Length	N/A
Weight	N/A

Questions? Contact Technical Support:
800 344 3286 or 209 521 7860 ext. 7555
e-mail: racortech@parker.com

ECO II HC Series

ECO II-HC

- Flow rates between 1000 and 1800 CFM.
- Perforated outer shell.
- Side inlet.
- End outlet.
- Molded urethane outlet.
- Water drain holes.
- Moisture-bloc media.
- Installs in any position.

Specifications	071338013
Air Flow	1000-1800 cfm (28.3-51.0 cmm)
Height	24.0 in. (61.0 cm)
Diameter	13.5 in. (34.3 cm)
Outlet Size	N/A
Inlet Size	N/A
Weight	N/A

Questions? Contact Technical Support:
800 344 3286 or 209 521 7860 ext. 7555
e-mail: racortech@parker.com

ECO III Series

ECO III

This clean simple toolless design, uses snap clamps to secure the housing and integrated element components together. The ECO III features four levels of sealing for maximum engine protection.

- **The entire ECO III system is serviced with four quick release stainless steel parameter clamps.**
- **The house can be rotated 180° on the base. The outlet port is field reversible, and the orientation of the inlet port is adjustable in 20° increments.**
- **Reversible base mounting bracket and hardware mounts quickly, in any direction.**
- **Quick Key, integral to the mounting base securely locks the ECO III housing after the filtration unit has been precisely positioned.**

Test Data

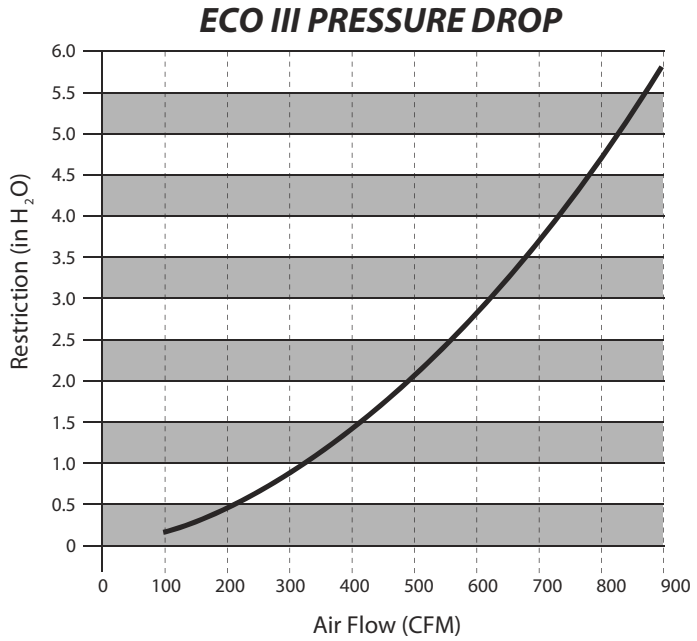

Questions? Contact Technical Support:
800 344 3286 or 209 521 7860 ext. 7555
e-mail: racortech@parker.com

ECO III Series

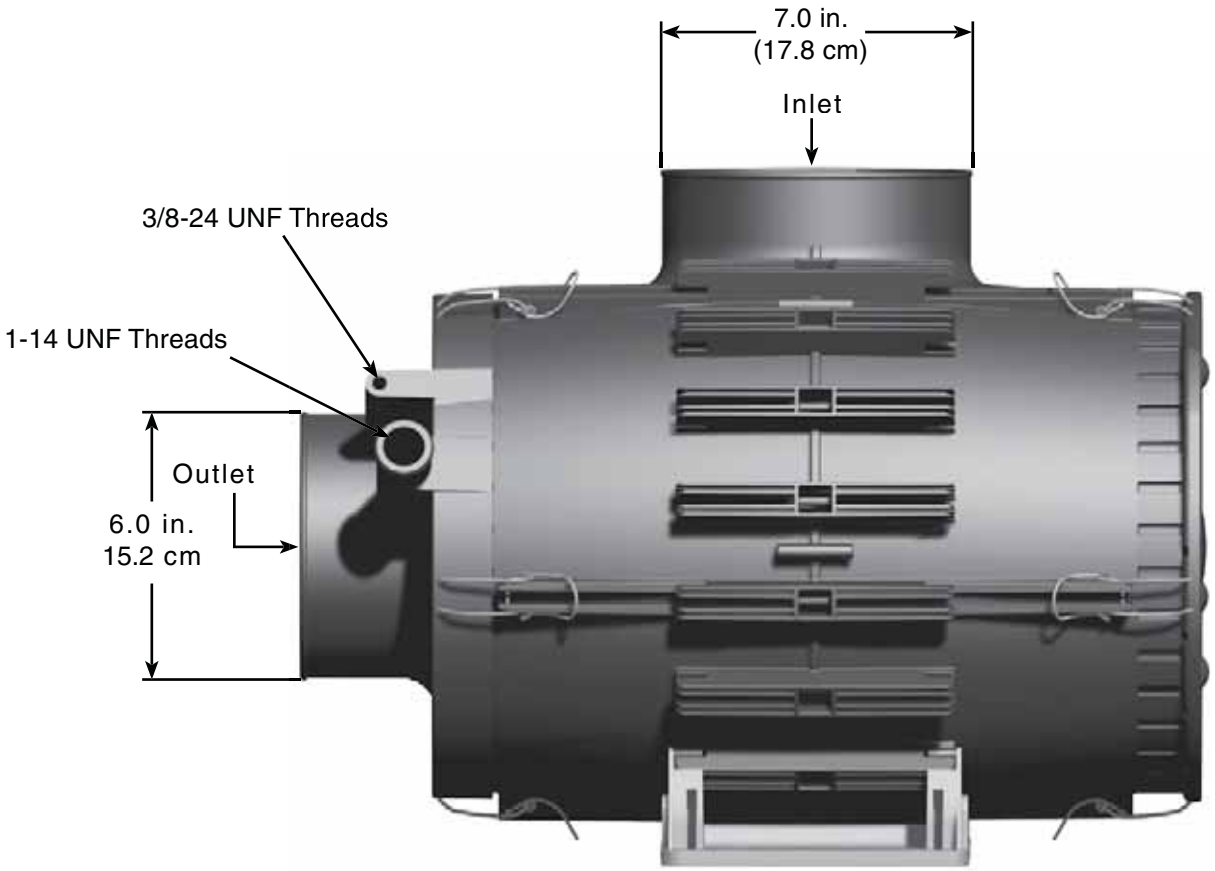

Specifications	500250012
Air Flow	900 cfm (25.5 cmm)
Inlet Size	7.0 in. (17.8 cm)
Outlet Size	6.0 in. (15.2 cm)
Height	13.6 in. (34.5 cm)
Width	20.6 in. (52.3 cm)

ECO III Series

Replacement Parts

	Part Number	Description
1.	**500192012**	Outlet Pan
2.	**500233000**	Safety Element
3.	**500250012**	Housing
4.	**500247012**	Primary Element
5.	**500187012**	Mounting Base

Additional Parts (not shown)

500229000	Replacement Clips (8)

Questions? Contact Technical Support:
800 344 3286 or 209 521 7860 ext. 7555
e-mail: racortech@parker.com

Customer Interface Drawing

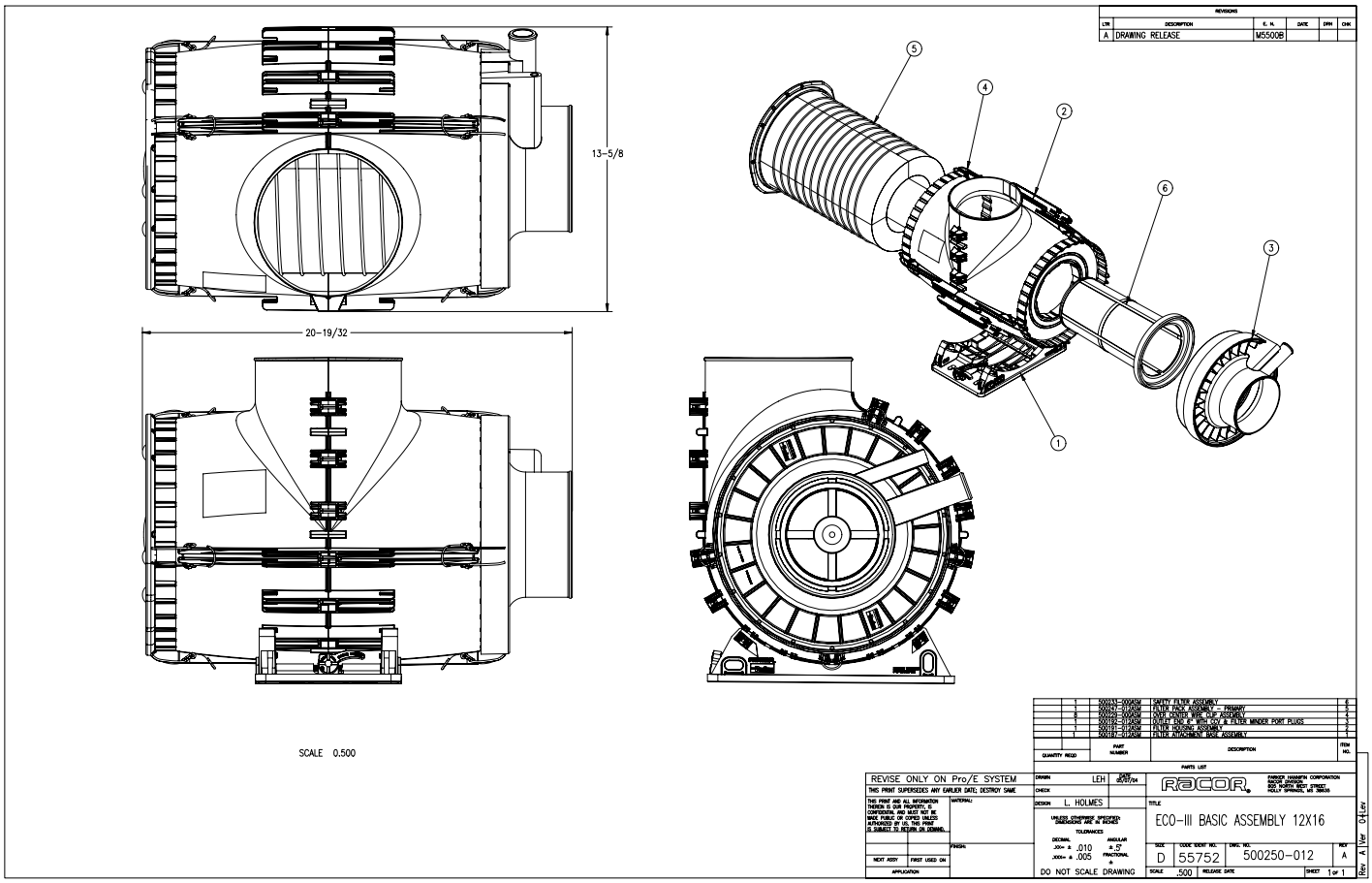

ECOLITE Series

ECOLITE

The original ECO Series product, the ECOLITE is still the only air filter in the industry that you can flow air in either direction. This allows a variety of installation options with the same part number replacement element. The ECOLITE can be mounted in any orientation or convenient location; underthe hood or outside, direct or remote.

- **Flow rates between 820 and 1900 CFM**
- **Reversible inlet/outlet (inlet can be at side or end)**
- **No drain holes**
- **Moisture-bloc media**
- **Installs in any position**

Specifications	062891001	062891002	062891003	062891004
Air Flow	820-1200 cfm (23.2-34.0 cmm)	1100-1650 cfm (31.1-46.7 cmm)	1375-1900 cfm (38.9-53.8 cmm)	1070-1590 cfm (30.3-45.0 cmm)
Height	24.0 in. (61.0 cm)	24.0 in. (61.0 cm)	24.0 in. (61.0 cm)	18.0 in. (45.7 cm)
Diameter	9.8 in. (24.9 cm)	11.0 in. (27.9 cm)	13.5 in. (34.3 cm)	13.5 in. (34.3 cm)
Outlet Size	6.0 in. (15.2 cm)	7.0 in. (17.8 cm)	7.0 in. (17.8 cm)	7.0 in. (17.8 cm)
Inlet Size	6.0 in. (15.2 cm)	7.0 in. (17.8 cm)	7.0 in. (17.8 cm)	7.0 in. (17.8 cm)
Weight	16.0 lbs (7.3 kg)	19.0 lbs (8.6 kg)	16.3 lbs (7.4 kg)	16.3 lbs (7.4 kg)

Specifications	062891007	062891010
Air Flow	820-1200 cfm (23.2-34.0 cmm)	1025-1540 cfm (29.0-43.6 cmm)
Height	24.0 in. (61.0 cm)	15.0 in. (38.1 cm)
Diameter	9.8 in. (24.9 cm)	13.5 in. (34.3 cm)
Outlet Size	6.0 in. (15.2 cm)	7.0 in. (17.8 cm)
Inlet Size	6.0 in. (15.2 cm)	7.0 in. (17.8 cm)
Weight	16.0 lbs (7.3 kg)	15.3 lbs (6.9 kg)

Notes:
cfm = feet^3 per minute
cmm = meters^3 per minute

Questions? Contact Technical Support:
800 344 3286 or 209 521 7860 ext. 7555
e-mail: racortech@parker.com

ECO-BC

Designed for behind the cab installation on trucks, the ECO-BC must be mounted vertical with inside-out air flow. Also is used for under hood and engine compartment applications. The rubber drain valve in the bottom of the unit allows any ingested water or dirt to drain out.

- **Flow rates between 720 and 1750 CFM**
- **Top inlet**
- **Side outlet**
- **Bleed valve in bottom of element**
- **Moisture-bloc media**
- **Installs in a vertical position only**

Specifications	094973001	094973002	094973003	094973004
Air Flow	1120-1600 cfm (31.7-45.3 cmm)	1450-1750 cfm (41.1-49.6 cmm)	875-1250 cfm (24.8-35.4 cmm)	720-1060 cfm (20.4-30.0 cmm)
Height	24.0 in. (61.0 cm)	24.0 in. (61.0 cm)	24.0 in. (61.0 cm)	18.0 in. (45.7 cm)
Diameter	11.0 in. (27.9 cm)	13.5 in. (34.3 cm)	9.8 in. (24.9 cm)	9.8 in. (24.9 cm)
Outlet Size	7.0 in. (17.8 cm)	7.0 in. (17.8 cm)	6.0 in. (15.2 cm)	6.0 in. (15.2 cm)
Inlet Size	7.0 in. (17.8 cm)	7.0 in. (17.8 cm)	6.0 in. (15.2 cm)	6.0 in. (15.2 cm)
Weight	19.0 lbs (8.6 kg)	27.0 lbs (12.3 kg)	16.0 lbs (7.3 kg)	10.4 lbs (4.7 kg)

Specifications	094973005	094973006	094973007
Air Flow	980-1470 cfm (27.8-41.6 cmm)	810-1200 cfm (22.9-34.0 cmm)	1010-1490 cfm (28.6-42.1 cmm)
Height	15.0 in. (38.1 cm)	18.0 in. (45.7 cm)	18.0 in. (45.7 cm)
Diameter	13.5 in. (34.3 cm)	11.0 in. (27.9 cm)	11.0 in. (27.9 cm)
Outlet Size	7.0 in. (17.8 cm)	6.0 in. (15.2 cm)	7.0 in. (17.8 cm)
Inlet Size	7.0 in. (17.8 cm)	7.0 in. (17.8 cm)	7.0 in. (17.8 cm)
Weight	15.4 lbs (7.0 kg)	12.6 lbs (5.7 kg)	12.5 lbs (5.7 kg)

Notes:
cfm = feet^3 per minute
cmm = meters^3 per minute

ECO-CM Series

ECO-CM

For cowl-mount installation on conventional style truck cabs.

- **U.S. flag logo embossed.**
- **Polished stainless steel cover.**
- **Air inlet/rain cap is standard.**
- **Right- and left-hand versions.**
- **No bolts or filter gaskets needed to seal housing.**
- **Fits most existing mounting configurations.**
- **Replaceable filter element includes inlet nozzle and water drain valve.**

Specifications	400460001*	400460002*	400462001	400462002
Application	Kenworth	Kenworth	Peterbilt	Peterbilt
Diameter	13.5 in. (34.3 cm)	13.5 in. (34.3 cm)	13.5 in. (34.3 cm)	13.5 in. (34.3 cm)
Replacement Element	078897001	078897001	078897001	078897001
Right Side	Yes	No	Yes	No
Left Side	No	Yes	No	Yes

* For Pre 1981 Kinworth use P/N 093759000 Adaptor Bracket for each Side.

Specifications	400458001	400458002	500155002
Application	Pre 1987 Peterbilt	Pre 1987 Peterbilt	Peterbilt
Diameter	13.5 in. (34.3 cm)	13.5 in. (34.3 cm)	15.0 in. (38.1 cm)
Replacement Element	078897001	078897001	400122000
Right Side	Yes	No	No
Left Side	No	Yes	Yes

Questions? Contact Technical Support:
800 344 3286 or 209 521 7860 ext. 7555
e-mail: racortech@parker.com

Replacement Parts

	Part Number	Description
1.	Air Intake and Rain Caps	
	400431000	13.5 in. (34.3 cm)
	400135000	15.0 in. (38.1 cm)
2.	CM - 102 For Kenworth	
	400461001	13.5 in. (34.3 cm) Stainless Cover - Right Hand Mount
	400461002	13.5 in. (34.3 cm) Stainless Cover - Left Hand Mount
	CM - 104 and CM - 101 For Peterbilt	
	400463001	13.5 in. (34.3 cm) Stainless Cover - Right Hand Mount
	400463002	13.5 in. (34.3 cm) Stainless Cover - Left Hand Mount
	CM - 106 For Peterbilt	
	500157001	15.0 in. (38.1 cm) Stainless Cover - Right Hand Mount
	500157002	15.0 in. (38.1 cm) Stainless Cover - Left Hand Mount
	CM - 107 For Kenworth	
	500158001	15.0 in. (38.1 cm) Stainless Cover - Right Hand Mount
	500158001	15.0 in. (38.1 cm) Stainless Cover - Left Hand Mount
3.	**078950000**	13.5 in. (34.3 cm) & 15.0 in. (38.1 cm) Replacement Clamping Channel Kit

ECO-LL Series

ECO-LL

The ECO-LL is similar to the ECO-SM, but is for applications where the customer wants to get the longest life from his air filter. There are also more sizes available. It is also for outside-on air flow only and has drain holes around the perimeter.

- **Flow rates between 645 and 1910 CFM.**
- **Long Life® paper pack.**
- **Side inlet.**
- **Top outlet.**
- **Water drain holes at top and bottom.**
- **Moisture-bloc media.**
- **Installs in any position.**

Specifications	400820001	400820002	400820003	400820004
Air Flow	985-1475 cfm (27.9-41.8 cmm)	905-1340 cfm (25.6-37.9 cmm)	645-950 cfm (18.3-26.9 cmm)	1295-1910 cfm (36.7-54.1 cmm)
Height	24.0 in. (61.0 cm)	24.0 in. (61.0 cm)	24.0 in. (61.0 cm)	24.0 in. (61.0 cm)
Diameter	11.0 in. (27.9 cm)	11.0 in. (27.9 cm)	11.0 in. (27.9 cm)	13.5 in. (34.3 cm)
Outlet Size	7.0 in. (17.8 cm)	7.0 in. (17.8 cm)	7.0 in. (17.8 cm)	7.0 in. (17.8 cm)
Inlet Size	7.0 in. (17.8 cm)	7.0 in. (17.8 cm)	7.0 in. (17.8 cm)	7.0 in. (17.8 cm)
Weight	19.0 lbs (8.6 kg)	19.0 lbs (8.6 kg)	19.0 lbs (8.6 kg)	21.5 lbs (9.8 kg)

Questions? Contact Technical Support:
800 344 3286 or 209 521 7860 ext. 7555
e-mail: racortech@parker.com

ECO-LL Overview

Specifications	400820005	400820006	400820007	400820008
Air Flow	1170-1735 cfm (33.1-49.1 cmm)	845-1250 cfm (23.9-35.4 cmm)	1115-1590 cfm (31.6-45.0 cmm)	1100-1545 cfm (31.1-43.7 cmm)
Height	24.0 in. (61.0 cm)	24.0 in. (61.0 cm)	15.0 in. (38.1 cm)	15.0 in. (38.1 cm)
Diameter	13.5 in. (34.3 cm)	13.5 in. (34.3 cm)	13.5 in. (34.3 cm)	13.5 in. (34.3 cm)
Outlet Size	7.0 in. (17.8 cm)	7.0 in. (17.8 cm)	7.0 in. (17.8 cm)	7.0 in. (17.8 cm)
Inlet Size	7.0 in. (17.8 cm)	7.0 in. (17.8 cm)	7.0 in. (17.8 cm)	7.0 in. (17.8 cm)
Weight	21.5 lbs (9.8 kg)	21.5 lbs (9.8 kg)	17.0 lbs (7.7 kg)	17.0 lbs (7.7 kg)

Specifications	400820009	400820010	400820012	400820014
Air Flow	1055-1560 cfm (29.9-44.2 cmm)	1135-1690 cfm (32.1-47.9 cmm)	820-1215 cfm (23.2-34.4 cmm)	970-1455 cfm (27.5-41.2 cmm)
Height	15.0 in. (38.1 cm)	15.0 in. (38.1 cm)	24.0 in. (61.0 cm)	18.0 in. (45.7 cm)
Diameter	13.5 in. (34.3 cm)	13.5 in. (34.3 cm)	9.8 in. (24.9 cm)	11.0 in. (27.9 cm)
Outlet Size	7.0 in. (17.8 cm)	7.0 in. (17.8 cm)	6.0 in. (15.2 cm)	7.0 in. (17.8 cm)
Inlet Size	7.0 in. (17.8 cm)	7.0 in. (17.8 cm)	6.0 in. (15.2 cm)	7.0 in. (17.8 cm)
Weight	15.1 lbs (7.0 kg)	15.1 lbs (7.0 kg)	13.1 lbs (6.0 kg)	13.5 lbs (6.2 kg)

ECO-LL Series

ECO-LL

Specifications	400820015	400820019	400820020	400820021
Air Flow	715-1075 cfm (20.2-30.4 cmm)	710-1100 cfm (20.1-31.1 cmm)	820-1230 cfm (23.2-34.8 cmm)	N/A
Height	18.0 in. (45.7 cm)	13.0 in. (33.0 cm)	15.0 in. (38.1 cm)	15.0 in. (38.1 cm)
Diameter	11.0 in. (27.9 cm)	11.0 in. (27.9 cm)	11.0 in. (27.9 cm)	11.0 in. (27.9 cm)
Outlet Size	7.0 in. (17.8 cm)	7.0 in. (17.8 cm)	7.0 in. (17.8 cm)	6.0 in. (15.2 cm)
Inlet Size	7.0 in. (17.8 cm)	7.0 in. (17.8 cm)	7.0 in. (17.8 cm)	7.0 in. (17.8 cm)
Weight	13.5 lbs (6.2 kg)	10.2 lbs (4.6 kg)	11.5 lbs (5.2 kg)	N/A

Specifications	400820022	400820023
Air Flow	650-960 cfm (18.4-27.2 cmm)	720-1060 cfm (20.4-30.0 cmm)
Height	18.0 in. (45.7 cm)	13.0 in. (33.0 cm)
Diameter	11.0 in. (27.9 cm)	11.0 in. (27.9 cm)
Outlet Size	6.0 in. (15.2 cm)	6.0 in. (15.2 cm)
Inlet Size	7.0 in. (17.8 cm)	7.0 in. (17.8 cm)
Weight	12.8 lbs (5.8 kg)	10.2 lbs (4.6 kg)

Notes:
cfm = feet^3 per minute
cmm = meters^3 per minute

Questions? Contact Technical Support:
800 344 3286 or 209 521 7860 ext. 7555
e-mail: racortech@parker.com

ECO-S2 Series

ECO-S2

- Flow rates between 1210 and 1910 CFM
- Large single grid opening
- Side inlet
- End outlet
- Molded urethane outlet
- Water drain holes in top and bottom of housing
- Moisture-bloc media
- Installs in any position

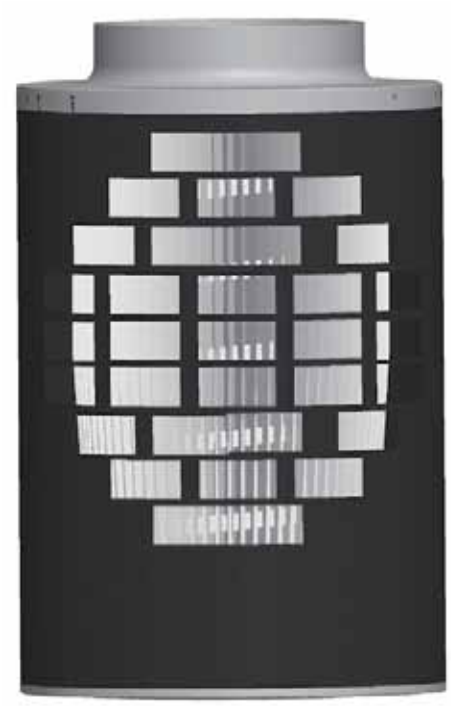

Specifications	400470002
Air Flow	1210-1910 cfm (34.3-54.1 cmm)
Height	15.0 in. (38.1 cm)
Diameter	11.0 in. (27.9 cm)
Outlet Size	7.0 in. (17.8 cm)
Inlet Size	N/A
Weight	N/A

Notes:
cfm = feet^3 per minute
cmm = meters^3 per minute

ECO-SE Series

ECO-SE

The ECO-SE is designed for small engine applications. It also has two unique features. First, it has a urethane outlet tube which allows the filter to be mounted directly to a metal tube or turbo without an additional rubber connection. Second, the standard unit is a straight through air filter, air goes in one end and out the other. Intake adapters are available if you would like to remotely locate the intake. The side inlet version offers additional mounting flexibility.

- **Flow rates between 240 and 1180 CFM**
- **Back (open) inlet or side inlet**
- **Top outlet**
- **Water drain holes at top and bottom**
- **Moisture-bloc media**
- **Installs in any position**

Specifications	114500001	114500002	114500003	117122000
Air Flow	240-340 cfm (6.8-9.6 cmm)	355-510 cfm (10.1-14.4 cmm)	610-890 cfm (17.3-25.2 cmm)	780-1180 cfm (22.1-33.4 cmm)
Height	13.8 in. (35.1 cm)	15.8 in. (40.1 cm)	18.8 in. (47.8 cm)	24.0 in. (61.0 cm)
Diameter	6.8 in. (17.3 cm)	7.8 in. (19.9 cm)	9.7 in. (24.6 cm)	11.0 in. (27.9 cm)
Outlet Size	3.0 in. (7.6 cm)	4.0 in. (10.2 cm)	5.0 in. (12.7 cm)	7.0 in. (17.8 cm)
Inlet Size	No	No	No	No
Weight	5.0 lbs (2.3 kg)	6.5 lbs (2.9 kg)	7.9 lbs (3.6 kg)	12.9 lbs (5.9 kg)

Specifications	114880003	114880005	400292000
Air Flow	600-900 cfm (17.0-25.5 cmm)	420-800 cfm (11.9-22.7 cmm)	N/A
Height	18.1 in. (46.0 cm)	15.8 in. (40.1 cm)	15.0 in. (38.1 cm)
Diameter	9.7 in. (24.6 cm)	7.8 in. (19.8 cm)	11.0 in. (27.9 cm)
Outlet Size	5.0 in. (12.7 cm)	4.0 in. (10.2 cm)	N/A
Inlet Size	6.0 in. (15.2 cm)	6.0 in. (15.2 cm)	N/A
Weight	9.0 lbs (4.1 kg)	7.0 lbs (3.2 kg)	N/A

Notes:
cfm = feet^3 per minute
cmm = meters^3 per minute

Questions? Contact Technical Support:
800 344 3286 or 209 521 7860 ext. 7555
e-mail: racortech@parker.com

ECO-SM

ECO-SM (Scheduled Maintenance)
The ECO-SM was designed to give additional mounting flexibility to the O.E.M. customer, while offering a greater value to the fleet that changes filter elements based on a scheduled maintenance program. Due to the various inlet tube locations, the ECO-SM is ideal for retrofit applications. It is for outside-in air flow only and has drain holes around the perimeter.

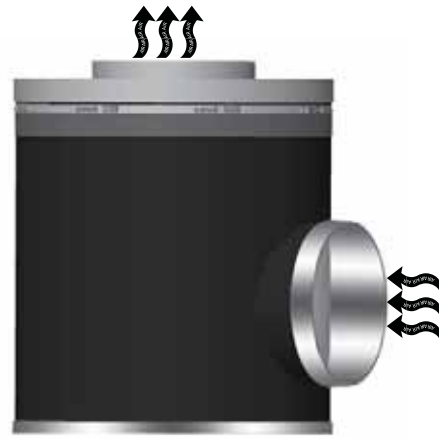

- **Flow rates between 730 and 1670 CFM.**
- **Scheduled maintenance paper pack.**
- **Side inlet.**
- **Top outlet.**
- **Water drain holes at top and bottom.**
- **Moisture-bloc media.**
- **Installs in any position.**

Specifications	099842002	099842004
Air Flow	980-1430 cfm (27.8-40.5)	1100-1620 cfm (31.1-45.9 cmm)
Height	24.0 in. (61.0 cm)	24.0 in. (61.0 cm)
Diameter	11.0 in. (27.9 cm)	13.5 in. (34.3 cm)
Outlet Size	7.0 in. (17.8 cm)	7.0 in. (17.8 cm)
Inlet Size	7.0 in. (17.8 cm)	7.0 in. (17.8 cm)
Weight	19.0 in. (8.6 kg)	27.0 lbs (12.3 kg)

ECO-SM Series

ECO-SM

Specifications	099842005	099842006	099842007
Air Flow	1130-1670 cfm (32.0-47.3 cmm)	1030-1500 cfm (29.2-42.5 cmm)	1120-1630 cfm (31.7-46.2 cmm)
Height	24.0 in. (61.0 cm)	24.0 in. (61.0 cm)	18.0 in. (45.7 cm)
Diameter	13.5 in. (34.3 cm)	13.5 in. (34.3 cm)	13.5 in. (34.3 cm)
Outlet Size	7.0 in. (17.8 cm)	7.0 in. (17.8 cm)	7.0 in. (17.8 cm)
Inlet Size	7.0 in. (17.8 cm)	7.0 in. (17.8 cm)	7.0 in. (17.8 cm)
Weight	27.0 lbs (12.3 kg)	27.0 lbs (12.3 kg)	24.0 lbs (10.9 kg)

Specifications	099842008	099842009	099842010
Air Flow	1060-1550 cfm (30.0-43.9 cmm)	1070-1550 cfm (30.3-43.9 cmm)	1060-1550 cfm (30.0-43.9 cmm)
Height	18.0 in. (45.7 cm)	15.0 in. (38.1 cm)	15.0 in. (38.1 cm)
Diameter	13.5 in. (34.3 cm)	13.5 in. (34.3 cm)	13.5 in. (34.3 cm)
Outlet Size	7.0 in. (17.8 cm)	7.0 in. (17.8 cm)	7.0 in. (17.8 cm)
Inlet Size	7.0 in. (17.8 cm)	7.0 in. (17.8 cm)	7.0 in. (17.8 cm)
Weight	24.0 lbs (10.9 kg)	22.5 lbs (10.0 kg)	22.5 lbs (10.0 kg)

Notes:
cfm = feet^3 per minute
cmm = meters^3 per minute

Questions? Contact Technical Support:
800 344 3286 or 209 521 7860 ext. 7555
e-mail: racortech@parker.com

Ember Separator

Ember protection is extremely important in order to protect fire suppression equipment as well as human life. The Racor Moisture Ember Separator (MES) protects the downstream air filter from embers using a combination of unique flat and crimped metal screens constructed into a galvanized steel frame. This multi-layered screen design traps embers and allows them to burn out before passing through the pack, while creating only minimal air flow restriction through the system.

In the event of fire hot embers may burn holes in the air filter, allowing dirt, sand, smoke and other particles to contaminate and shut down the engine, often beyond repair. Even worse, a burning air filter may lead to a major vehicle fire. Also, large amounts of free water in the cylinders can result in broken pistons or bent rods. The Racor Moisture & Ember Separator is specifically designed to help separate hot embers from entering the engine intake. Meets NFPA guidelines.

Note: Periodic cleaning or replacement of the screen is all that's required after installation.

- **Removes embers from air flow.**
- **One inch thick.**
- **Can be used as a moisture separator.**

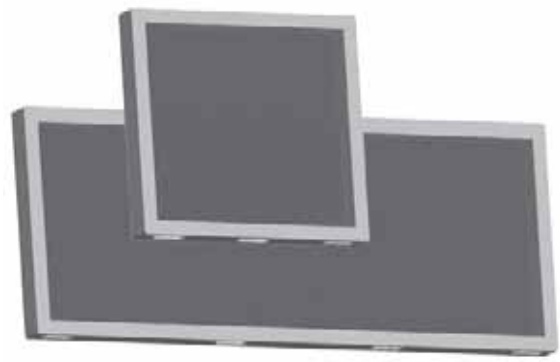

Specifications

Part Number	Description	Rated Airflow	Construction	Weight
93530-001	Housing with two separators	1600 CFM (2719 CMH)	Mild steel housing and polished stainless steel separators	48.5 lbs (22.0 kg)
58488-010	Replacement ember and moisture separator	800 CFM (1359 CMH)	Polished stainless steel	12.0 lbs (505 kgs)

Ember Separator

Ember Separator Overview

Specifications	123970001	123970002	123970003	123970004
Filtering Area	160.0 in.^{2} (1,032.3 cm^2)	69.0 in.^{2} (445.2 cm^2)	110.0 in.^{2} (709.7 cm^2)	187.0 in.^{2} (1206.4 cm^2)
Height	8.0 in. (20.3 cm)	7.9 in. (20.1 cm)	5.5 in. (14.0 cm)	20.8 in. (52.8 cm)
Width	20.0 in. (50.8 cm)	8.6 in. (21.8 cm)	20.0 in. (50.8 cm)	9.0 in. (22.9 cm)
Depth	1.0 in. (2.5 cm)	1.0 in. (2.5 cm)	1.0 in. (2.5 cm)	1.0 in. (2.5 cm)
Weight	2.5 lbs (1.1 kg)	1.2 lbs (0.6 kg)	2.5 lbs (1.1 kg)	3.0 lbs (1.4 kg)

Specifications	123970005	123970006	123970007	123970008
Filtering Area	114.0 in.^{2} (735.5 cm^2)	99.4 in.^{2} (641.3 cm^2)	233.4 in.^{2} (1505.8 cm^2)	60.0 in.^{2} (387.1 cm^2)
Height	9.5 in. (24.1 cm)	9.3 in. (23.6 cm)	11.3 in. (28.7 cm)	4.0 in. (10.2 cm)
Width	12.0 in. (30.5 cm)	10.8 in. (27.4 cm)	20.8 in. (52.8 cm)	15.0 in. (38.1 cm)
Depth	1.0 in. (2.5 cm)	1.0 in. (2.5 cm)	1.0 in. (2.5 cm)	1.0 in. (2.5 cm)
Weight	2.4 lbs (1.1 kg)	1.6 lbs (0.7 kg)	3.3 lbs (1.5 kg)	1.5 lbs (0.7 kg)

Specifications	123970009	123970010	123970011	123970012
Filtering Area	60.0 in.^{2} (387.1 cm^2)	121.3 in.^{2} (782.5 cm^2)	72.0 in.^{2} (464.5 cm^2)	89.4 in.^{2} (576.8 cm^2)
Height	7.8 in. (19.8 cm)	20.6 in. (52.3 cm)	9.0 in. (22.9 cm)	16.3 in. (41.4 cm)
Width	7.8 in. (19.8 cm)	5.9 in. (15.0 cm)	8.0 in. (20.3 cm)	5.5 in. (14.0 cm)
Depth	1.0 in. (2.5 cm)	1.0 in. (2.5 cm)	1.0 in. (2.5 cm)	1.0 in. (2.5 cm)
Weight	2.6 lbs (1.2 kg)	2.0 lbs (0.9 kg)	1.2 lbs (0.6 kg)	1.6 lbs (0.7 kg)

Ember Separator Overview

Specifications	123970013	123970014	123970015	123970016
Filtering Area	87.5 in.^{2} (564.5 cm^2)	42.0 in.^{2} (271.0 cm^2)	124.0 in.^{2} (800.0 cm^3)	201.3 in.^{2} (1298.7 cm^2)
Height	3.5 in. (8.9 cm)	12.0 in. (30.5 cm)	8.0 in. (20.3 cm)	23.0 in. (58.4 cm)
Width	25.0 in. (63.5 cm)	3.5 in. (8.9 cm)	15.5 in. (39.4 cm)	8.8 in. (22.4 cm)
Depth	1.0 in. (2.5 cm)	1.0 in. (2.5 cm)	1.0 in. (2.5 cm)	1.0 in. (2.5 cm)
Weight	1.8 lbs (0.8 kg)	1.0 lbs (0.5 kg)	2.0 lbs (0.9 kg)	3.0 lbs (1.4 kg)

Specifications	123970017	123970018	123970019	123970020
Filtering Area	68.0 in.^{2} (438.7 cm^2)	50.8 in.^{2} (327.7 cm^2)	112.0 in.^{2} (722.6 cm^2)	81.8 in.^{2} (527.7 cm^2)
Height	5.3 in. (13.5 cm)	5.3 in. (13.5 cm)	16.0 in. (40.6 cm)	11.9 in. (30.2 cm)
Width	12.8 in. (32.5 cm)	9.5 in. (24.1 cm)	7.0 in. (17.8 cm)	6.8 in. (17.3 cm)
Depth	1.0 in. (2.5 cm)	1.0 in. (2.5 cm)	1.0 in. (2.5 cm)	1.0 in. (2.5 cm)
Weight	1.2 lbs (0.6 kg)	1.0 lbs (0.5 kg)	1.8 lbs (0.8 kg)	1.4 lbs (0.6 kg)

Specifications	123970021	123970022	123970023	123970024
Filtering Area	194.0 in.^{2} (1251.6 cm^2)	89.4 in.^{2} (576.8 cm^2)	55.0 in^2 (354.8 cm^2)	N/A
Height	11.4 in. (29.0 cm)	5.5 in. (14.0 cm)	10.0 in. (25.4 cm)	4.0 in. (10.2 cm)
Width	17.1 in. (43.4 cm)	16.3 in. (41.4 cm)	5.5 in. (14.0 cm)	22.0 in. (55.9 cm)
Depth	1.0 in. (2.5 cm)	1.0 in. (2.5 cm)	1.0 in. (2.5 cm)	1.0 in. (2.5 cm)
Weight	2.8 lbs (1.3 kg)	1.6 lbs (0.7 kg)	2.5 lbs (1.1 kg)	1.7 lbs (0.8 kg)

Spinaire Series

Spinaire Precleaners

- **Air flow rates between 210 and 1850 cubic feet per minute (CFM).**
- **Outlet 4.0-9.0 in. (10.1-22.8 cm).**
- **Metal housing.**
- **Dynamic vane pre-cleaner.**

Applications

Racor Engine Air Precleaners are designed to be mounted on or connected to the air filter intake of a gasoline or diesel engine air cleaner. Their applications include all slow moving and industrial equipment such as agricultural machinery; earth moving, construction and mining equipment; pumping plants; generator sets; material handling equipment; snow removal equipment and street sweepers.

Features and Benefits

Removes up to 90% of impurities from intake air before the air enters the filter elements. Extends engine air filter life. Reduces down time. Prolongs engine and turbocharger life. Saves on fuel costs. Easy to install. Three plastic outlet reduction sleeves are provided with each assembly.

A wide range of applications and flow rates. Steel housing, black powder coat. High air flow, low differential design. The precleaner is self-powered and self-cleaning, requiring no electrical or exhaust gas power to dispose of separated particles. It requires virtually no maintenance and should be inspected occasionally to insure that no foreign material has plugged intake or exhaust port areas.

Questions? Contact Technical Support:
800 344 3286 or 209 521 7860 ext. 7555
e-mail: racortech@parker.com

Spinaire Series Overview

Specifications	123583440	123583550	123583660
Maximum Flow Rate	300 CFM (8.5 CMM)	520 CFM (14.7 CMM)	740 CFM (21.0 CMM)
Height	4.8 in. (12.2 cm)	7.1 in. (18.0 cm)	7.1 in. (18.0 cm)
Diameter	8.3 in. (21.1 cm)	10.6 in. (26.9 cm)	12.3 in. (31.2 cm)
Weight	5.0 lbs (2.3 kg)	8.0 lbs (3.6 kg)	9.0 lbs (4.1 kg)
Inlet Diameter	4.0 in. (10.2 cm)	5.0 in. (12.7 cm)	6.0 in. (15.2 cm)

Specifications	123583665	123583770	123583990
Maximum Flow Rate	580 CFM (16.4 CMM)	1190 CFM (33.7 CMM)	1850 CFM (52.4 CMM)
Height	7.1 in. (18.0 cm)	7.3 in. (18.5 cm)	8.1 in. (20.3 cm)
Diameter	10.6 in. (26.9 cm)	14.1 in. (35.8 cm)	17.1 in. (43.4 cm)
Weight	8.0 lbs (3.6 kg)	11.0 lbs (5.0 kg)	14.0 lbs (6.3 kg)
Inlet Diameter	6.0 in. (15.2 cm)	7.0 in. (17.8 cm)	9.0 in. (22.9 cm)

Notes:
cfm = feet^3 per minute
cmm = meters^3 per minute

Spinaire Series

Part Description

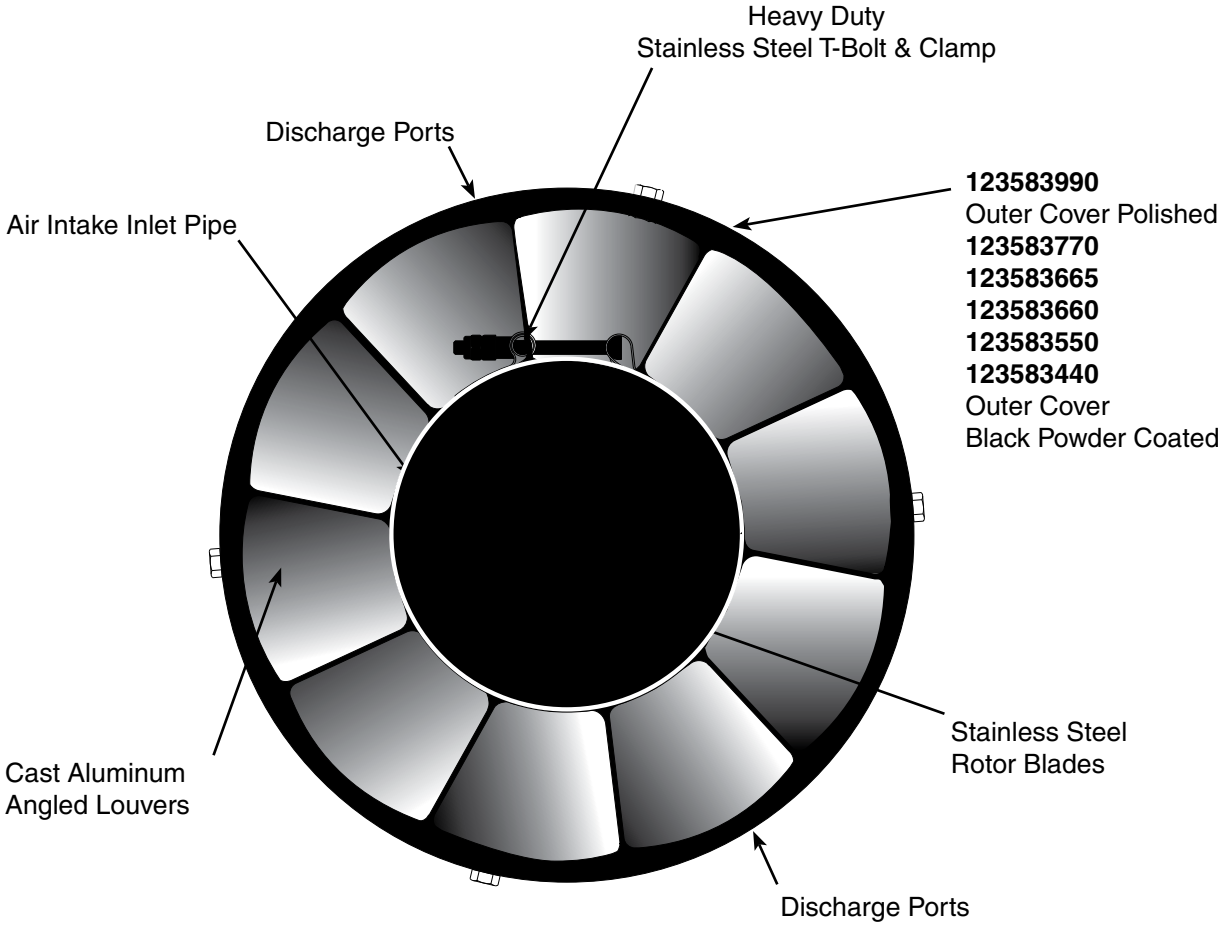

Bottom View

Tenkay Elements

Specifications	125154005	125254013	084404000
Description	Tenkay STXL282	Tenkay STL222	Pamic Tenkay
Height	34.4 in. (87.4 cm)	N/A	N/A
Width	11.8 in. (3.0 cm)	N/A	N/A
Weight	19.0 lbs (8.6 kg)	14.0 lbs (6.3 kg)	1.0 lbs (0.5 kg)

Pamic Series

Pamic Series

The unique construction of the Pamic element with its exclusive mechanical pleat separation, provides more usable filter area than any competitive air cleaner, thus offering longer element life. UniPamic® models feature an efficient moisture separator panel which removes over 90% of the water that may enter the face of the air cleaner. AutoPamic® models can be upgraded to include a gravity-discharged dust pre-cleaner. RotoPamic® models are upgradable to either a compressed air or exhaust-aspirated pre-cleaner. An optional, easy-to-use service indicator tells when to change the filter element assuring maximum usage and lowest operating filter costs.

With its low intake air restriction and its greater effective media area than other dry-type air cleaners, the Pamic Series offers improved fuel economy and lowers per hour operating costs. No special tools or techniques, dirt is held inside the pleated filter element tubes. The filter is replaced from the dirty side of the air cleaner, reducing the danger of engine contamination. Because it is an integral part of the filter element, there are no separate gaskets to replace.

Autopamic Series

Rotopamic Series

Pre-Cleaners

Unipamic Series

Benefits:

- **Security Shield.**
- **Extended Service Life.**
- **Increased Horsepower.**
- **Reduced Fuel Consumption.**
- **Easy To Service.**

Questions? Contact Technical Support:
800 344 3286 or 209 521 7860 ext. 7555
e-mail: racortech@parker.com

Autopamic Series

- Flow rates between 150 and 1280 CFM
- Gravity discharge pre-cleaner inlet
- Vertical tube configuration
- STD with no outlet
- Outlet ordered separately

Specifications	062705001	062705002	062705008
Max Air Flow	150-200 cfm (4.2-5.7 cmm)	175-250 cfm (5.0-7.1 cmm)	350-450 cfm (9.9-12.7 cmm)
HP. Range	75-100	80-125	175-225
Pamic Element	012233003	012233004	012233007
Number of Tubes **High:** **Wide:**	9 3 3	12 3 4	24 4 6
Outlet Size	3.0	3.0	4.0
Width	8.6 in. (21.8 cm)	10.9 in. (27.7 cm)	15.5 in. (39.4 cm)
Height	8.6 in. (21.8 cm)	8.6 in. (21.8 cm)	10.9 in. (27.7 cm)
Weight	32.3 lbs (14.5 kg)	37.0 lbs (17.0 kg)	58.7 lbs (26.4 kg)

Questions? Contact Technical Support:
800 344 3286 or 209 521 7860 ext. 7555
e-mail: racortech@parker.com

Autopamic Series

Autopamic Series Overview

Specifications	062705010	062705011	062705012
Max Air Flow	450-650 cfm (12.7-18.4 cmm)	600-800 cfm (17.0-22.7 cmm)	700-950 cfm (19.8-26.9 cmm)
HP. Range	225-325	300-400	350-475
Pamic Element	012233008	012233009	012233010
Number of Tubes **High:** **Wide:**	32 4 8	40 5 8	48 6 8
Outlet Size	5.0 in. (12.7 cm)	5.0 in. (12.7 cm)	6.0 in. (15.2 cm)
Width	20.2 in. (51.3 cm)	20.2 in. (51.3 cm)	20.2 in. (51.3 cm)
Height	10.9 in. (27.7 cm)	13.2 in. (33.5 cm)	15.5 in. (39.4 cm)
Weight	71.0 lbs (32.0 kg)	84.0 lbs (38.1 kg)	93.0 lbs (42.0 kg)

Specifications	062705013	059714000	059716000	059718000
Max Air Flow	950-1280 cfm (26.9-36.2 cmm)	1200-1600 cfm (34.0-45.3 cmm)	1400-1900 cfm (39.6-53.8 cmm)	1900-2500cfm (53.8-70.8 cmm)
HP. Range	475-640	600-800	700-950	950-1280
Pamic Element	012233011	012233009[2]	012233010[2]	012233011[2]
Number of Tubes **High:** **Wide:**	64 8 8	80[1] 8 10	96[1] 8 12	128[1] 8 16
Outlet Size	6.0 in. (15.2 cm)	5.5 x 2	N/A	N/A
Width	20.2 in. (51.3 cm)	20.2 in. (51.3 cm)	20.2 in. (51.3 cm)	20.2 in. (51.3 cm)
Height	20.2 in. (51.3 cm)	27.8 in. (70.6 cm)	32.4 in. (82.3 cm)	41.8 in. (104.1 cm)
Weight	111.0 lbs (50.3 kg)	160.0 lbs (72.6 kg)	175.0 lbs (79.4 kg)	217.0 lbs (98.4 kg)

[1] Double side by side housing. Two air outlet nozzles required. There are no internal flanges on double housings.
[2] Two elements needed.

Rotopamic Series

- **Flow rates between 200 and 2200 CFM**
- **Positive pressure bleed**
- **Right hand bleed**
- **Vertical tube configuration**
- **STD with no outlet**
- **Outlet ordered separately**

Part Number	Kit Description	Weight
062713003	P24, V RH Bleed, NO Out	59.0 lbs (26.6 kg)
062713007	P32, V RH Bleed, NO Out	70.0 lbs (31.0 kg)
062713009	P40, V RH Bleed, NO Out	82.0 lbs (36.9 kg)
062713011	P48, V RH Bleed, NO Out	92.0 lbs (41.4 kg)
062713013	P64, V RH Bleed, NO Out	111.0 lbs (50.0 kg)
067872000	P80, V RH Bleed, NO Out	145.0 lbs (65.3 kg)
067874000	P96, V RH Bleed, NO Out	165.0 lbs (74.3 kg)
067876000	P128, V RH Bleed, NO Out	206.0 lbs (92.7 kg)

Unipamic Series

Unipamic Series

- Flow rates between 100 and 3200 CFM
- Moisture separator pre-cleaner
- Vertical tube configuration
- STD with no outlet
- Outlet ordered separately

Specifications	044430001	059709000	059711000	059713000
Max Air Flow	1255 cfm (35.5 cmm)	1200 - 2000 cfm (34.0-56.6 cmm)	1400 - 2400 cfm (39.6-68.00 cmm)	2000 - 3200 cfm (56.6-90.6 cmm)
Pamic Element (2)	012233-008	012233009	056519004	065619005
Moisture Separator (2)	056519-002	056519003	012233010	012233011
Width	10.3 in. (26.2 cm)	27.8 in. (70.6 cm)	20.2 in. (56.4 cm)	20.2 in. (56.4 cm)
Height	40.2 in. (102.4 cm)	20.2 in. (56.4 cm)	32.4 in. (82.3 cm)	41.7 in. (105.9 cm)
Depth	15.5 in. (39.4 cm)	N/A	N/A	N/A
Weight	116.0 lbs (52.2 kg)	111.0 lbs (50.0 kg)	124.0 lbs (55.8 kg)	148.0 lbs (66.6 kg)

Specifications	062701003	062701004	062701010
Max Air Flow	3200 cfm (90.6 cmm)	3200 cfm (90.6 cmm)	3200 cfm (90.6 cmm)
Number of Tubes	9	12	24
Pamic Element	12233-003	12233-004	012233-007
Moisture Separator	056519-010	056519-011	056519-016
Width	8.6 in. (21.8 cm)	8.6 in. (21.8 cm)	10.9 in. (27.7 cm)
Height	8.6 in. (21.8 cm)	10.9 in. (27.7 cm)	15.5 in. (39.4 cm)
Depth	12.4 in. (31.5 cm)	12.4 in. (31.5 cm)	12.4 in. (31.5 cm)
Weight	25.0 lbs (11.3 kg)	29.6 lbs (13.3 kg)	44.4 lbs (20.0 kg)

Questions? Contact Technical Support:
800 344 3286 or 209 521 7860 ext. 7555
e-mail: racortech@parker.com

Unipamic Series

Specifications	062701012	062701013	062701014
Max Air Flow	3200 cfm (90.6 cmm)	3200 cfm (90.6 cmm)	3200 cfm (90.6 cmm)
Number of Tubes	32	40	48
Pamic Element	12233-008	12233-009	012233-010
Moisture Separator	056519-002	056519-003	056519-004
Width	10.9 in. (27.7 cm)	13.2 in. (33.5 cm)	15.5 in. (39.4 cm)
Height	20.2 in. (51.3 cm)	10.9 in. (27.7 cm)	20.1 in. (51.1 cm)
Depth	12.4 in. (31.5 cm)	12.4 in. (31.5 cm)	12.4 in. (31.5 cm)
Weight	54.7 lbs (24.6 kg)	61.6 lbs (27.7 kg)	68.5 lbs (30.8 kg)

Specifications	062701015	062702001	062702002
Max Air Flow	3200 cfm (90.6 cmm)	3200 cfm (90.6 cmm)	3200 cfm (90.6 cmm)
Number of Tubes	64	4	6
Pamic Element	012233-011	012233-002	012233-012
Moisture Separator	056519-005	056519-007	056519-008
Width	20.2 in. (51.3 cm)	6.3 in. (16.0 cm)	6.3 in. (16.0 cm)
Height	20.2 in. (51.3 cm)	6.3 in. (16.0 cm)	8.6 in. (21.8 cm)
Depth	12.4 in. (31.5 cm)	13.8 in. (35.0 cm)	13.8 in. (35.0 cm)
Weight	78.8 lbs (35.5 kg)	N/A	N/A

Specifications	062702003	062703010
Max Air Flow	3200 cfm (90.6 cmm)	3200 cfm (90.6 cmm)
Number of Tubes	9	40
Pamic Element	012233-003	012233-009
Moisture Separator	056519-010	056519-003
Width	8.6 in. (21.8 cm)	13.2 in. (33.5 cm)
Height	8.6 in. (21.8 cm)	20.2 in. (51.3 cm)
Depth	13.8 in. (35.0 cm)	14.2 in. (36.1 cm)
Weight	N/A	61.6 lbs (27.7 kg)

Pamic Series

Pamic Series Elements

- **Fits all Pamic Series Housings.**
- **Moisture Block Media.**

Part Number	Description	Weight
012233001	P-2	0.6 lbs (0.3 kg)
012233002	P-4	1.7 lbs (0.8 kg)
012233012	P-6	2.3 lbs (1.0 kg)
012233003	P-9	2.9 lbs (1.3 kg)
012233004	P-12	3.5 lbs (1.6 kg)
012233014	P-12-26 (2x6)	4.0 lbs (1.8 kg)
012233005	P-16	4.6 lbs (2.1 kg)
012233017	P-18	5.8 lbs (2.6 kg)
012233006	P-20	6.9 lbs (3.1 kg)
012233007	P-24	7.5 lbs (3.4 kg)
012233018	P-16-28 (3x8)	5.2 lbs (2.3 kg)
012233019	P-24-38 (3x8)	8.1 lbs (3.6 kg)
012233008	P-32	8.6 lbs (3.6 kg)
012233009	P-40	10.4 lbs (4.7 kg)
012233010	P-48	12.1 lbs (5.4 kg)
012233011	P-64	15.5 lbs (7.0 kg)

Questions? Contact Technical Support:
800 344 3286 or 209 521 7860 ext. 7555
e-mail: racortech@parker.com

Pamic Series

UHD Elements

Replacement element for UHD systems.

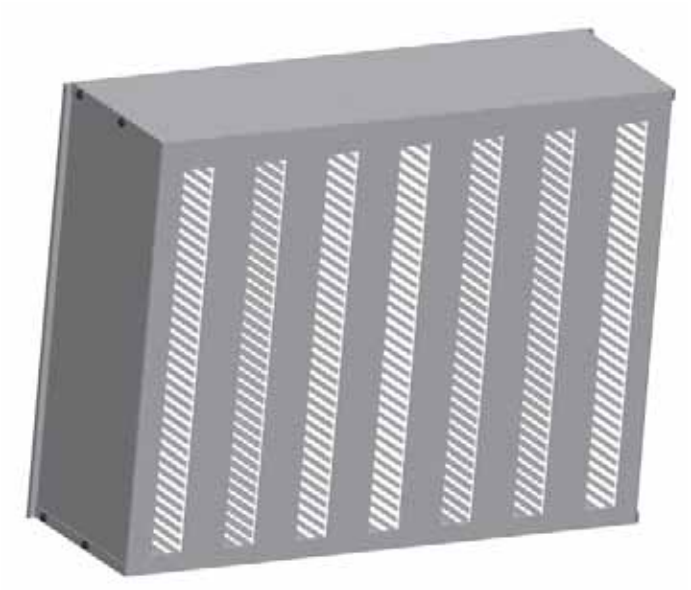

Part Number	Size	Weight
061194000	Primary Filter 100	27.0 lbs (12.2 kg)
061195000	Secondary Filter 100	22.0 lbs (9.9 kg)

Questions? Contact Technical Support:
800 344 3286 or 209 521 7860 ext. 7555
e-mail: racortech@parker.com

Pamic Series

Housing

Part Number	Description	Weight
060450022	P-9	15.0 lbs (6.8 kg)
060450023	P-12	17.3 lbs (7.8 kg)
060450026	P-24	25.3 lbs (11.4 kg)
060450027	P-32	30.5 lbs (13.7 kg)
060450028	P-40	34.0 lbs (15.3 kg)
060450029	P-48	38.0 lbs (17.1 kg)
060450030	P-64	42.0 lbs (18.9 kg)
024811001	P-80	60.0 lbs (27.0 kg)
024811002	P-96	67.0 lbs (30.2 kg)
024811003	P-128	78.0 lbs (35.1 kg)

Fasteners

Part Number	Description	Weight
042067000	Auto/Roto Pamic (P6 - P64)	0.4 lbs (0.2 kg)
042160000	Auto/Roto Pamic (P80, P96 and P128)	0.4 lbs (0.2 kg)
042586000	UniPamic (All Models)	0.4 lbs (0.2 kg)

Questions? Contact Technical Support:
800 344 3286 or 209 521 7860 ext. 7555
e-mail: racortech@parker.com

Pamic Series

Pre-Cleaners

Part Number	Description	Weight
056519010	Unipamic Pre-CLeaner P-9	4.6 lbs (2.1 kg)
056519011	Unipamic Pre-CLeaner P-12	6.3 lbs (2.8 kg)
056519016	Unipamic Pre-CLeaner P-24	8.6 lbs (3.9 kg)
056519002	Unipamic Pre-CLeaner P-32	5.0 lbs (2.3 kg)
056519003	Unipamic Pre-CLeaner P-40/P-80	13.8 lbs (6.2 kg)
056519004	Unipamic Pre-CLeaner P-48/P-96	15.0 lbs (6.8 kg)
056519005	Unipamic Pre-CLeaner P-64/P-128	17.8 lbs (8.0 kg)
035589001	Autopamic Pre-CLeaner P-9	10.0 lbs (4.5 kg)
035589008	Autopamic Pre-CLeaner P-24	21.0 lbs (9.5 kg)
035589010	Autopamic Pre-CLeaner P-32	25.5 lbs (11.5 kg)
035589011	Autopamic Pre-CLeaner P-40/P-80	31.3 lbs (14.1 kg)
035589012	Autopamic Pre-CLeaner P-48/P-96	36.2 lbs (16.3 kg)
035589013	Autopamic Pre-CLeaner P-64/P-128	48.0 lbs (21.6 kg)
060392001	Rotopamic Pre-CLeaner P-24	20.0 lbs (9.0 kg)
060393001	Rotopamic Pre-CLeaner P-32	24.2 lbs (10.9 kg)
060394001	Rotopamic Pre-CLeaner P-40	14.0 lbs (6.3 kg)
060394002	Rotopamic Pre-CLeaner P-40 LH	31.0 lbs (14.0 kg)
060395001	Rotopamic Pre-CLeaner P-48	34.5 lbs (15.5 kg)
060395002	Rotopamic Pre-CLeaner P-48 LH	34.5 lbs (15.5 kg)
060396001	Rotopamic Pre-CLeaner P-64	46.0 lbs (20.7 kg)
060396002	Rotopamic Pre-CLeaner P-64 LH	46.0 lbs (20.7 kg)

Pamic Series

Air Oulet Tubes

- **4 in. length.**
- **Outlet transition for Pamic housings.**

Specifications	015382500	015382508	015382600
Length	4.0 in. (10.2 cm)	4.0 in. (10.1 cm)	4.0 in. (10.1 cm)
Width	5.0 in. (12.7 cm)	5.5 in. (13.9 cm)	6.0 in. (15.2 cm)
Weight	3.0 lbs (1.4 kg)	3.5 lbs (1.6 kg)	3.5 lbs (1.6 kg)

Questions? Contact Technical Support:
800 344 3286 or 209 521 7860 ext. 7555
e-mail: racortech@parker.com

Pamic Series

Air Oulet Nozzles

- **Outlet transition for pamic housing.**
- **Lower pressure drop than tubes**

F

Specifications	041199001	041199002	041199003
Length	1.6 in. (4.1 cm)	1.6 in. (4.1 cm)	1.7 in. (4.3 cm)
Maximum Width	4.6 in. (11.7 cm)	5.1 in. (13.0 cm)	5.8 in. (14.7 cm)
Outside Diameter	3.0 in. (7.6 cm)	3.5 in. (8.9 cm)	4.0 in. (10.2 cm)
Mounting Hole Size	3.9 in. (9.9 cm)	4.3 in. (10.9 cm)	5.4 in. (13.7 cm)
Weight	0.7 lbs (0.3 kg)	0.7 lbs (0.3 kg)	1.0 lbs (0.5 kg)

Specifications	041199004	041199005	041199006
Length	2.0 in. (5.1 cm)	2.2 in. (5.6 cm)	2.2 in. (5.6 cm)
Maximum Width	7.2 in. (18.3 cm)	7.8 in. (19.8 cm)	8.3 in. (21.1 cm)
Outside Diameter	5.0 in. (12.7 cm)	5.5 in. (14.0 cm)	6.0 in. (15.2 cm)
Mounting Hole Size	6.1 in. (15.5 cm)	6.9 in. (17.5 cm)	7.4 in. (18.8 cm)
Weight	1.2 lbs (0.5 kg)	1.4 lbs (0.6 kg)	1.6 lbs (0.7 kg)

Specifications	041199007	041199807	070025004
Length	2.2 in. (5.6 cm)	2.2 in. (5.6 cm)	2.2 in. (5.6 cm)
Maximum Width	9.4 in. (23.9 cm)	9.4 in. (23.9 cm)	10.4 in. (26.4 cm)
Outside Diameter	7.0 in. (17.8 cm)	7.0 in. (17.8 cm)	8.0 in. (20.3 cm)
Mounting Hole Size	8.3 in. (21.1 cm)	8.3 in. (21.1 cm)	9.3 in. (23.6 cm)
Weight	2.5 lbs (1.1 kg)	2.5 lbs (1.1 kg)	1.8 lbs (0.8 kg)

Dynacell Series

Dynacell Series

Dynacell air cleaners are recommended for engine driven generator sets, pumps, compressors and other similar applications where high efficiency and a low profile are required. Heavy service applications include off-highway and logging trucks, agricultural tractor & graders, as well as construction and mining equipment. Extra heavy service applications include

- **Air flow rate from 250 to 1470 CFM.**
- **Horizontal or vertical installation.**
- **With or without pre-cleaner.**
- **Gravity bleed or positive pressure.**
- **With or without safety.**
- **Outlet in the center of the pan.**

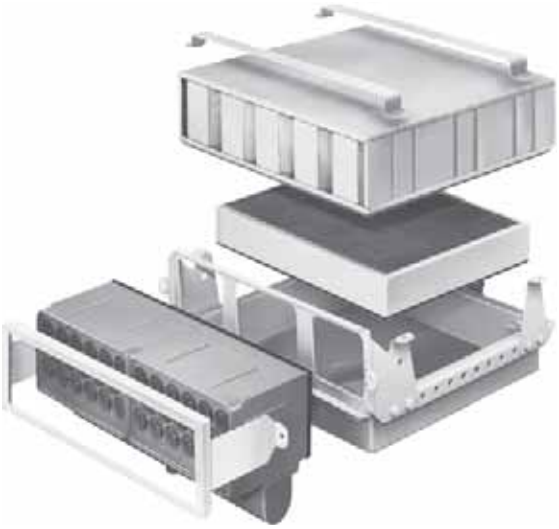

T-512

Spcifications	058447000	060039000	066386002	066401002
Max Flow Rate	600 cfm (17.0 cmm)	500 cfm (14.2 cmm)	425 cfm (12.0 cmm)	425 cfm (12.0 cmm)
Positive Pressure	No	No	No	No
Gravity Bleed	No	No	Horizontal	Vertical
Safety Element	No	060236000	No	No
Element	049261000	049261000	049261000	049261000
Outlet Size	5.0 in. (12.7 cm)	5.0 in. (12.7 cm)	5.0 in. (12.7 cm)	5.0 in. (12.7 cm)
Height	5.0 in. (12.7 cm)	7.7 in. (19.6 cm)	11.3 in. (28.7 cm)	11.7 in. (29.7 cm)
Width	11.5 in. (29.2 cm)	11.6 in. (29.5 cm)	11.7 in. (29.7 cm)	11.3 in. (28.7 cm)
Length	15.0 in. (38.1 cm)	15.1 in. (38.4 cm)	15.1 in. (38.4 cm)	15.1 in. (38.4 cm)
Weight	19.0 lbs (8.6 kg)	53.0 lbs (23.9 kg)	55.0 lbs (24.8 kg)	55.0 lbs (24.8 kg)

Questions? Contact Technical Support:
800 344 3286 or 209 521 7860 ext. 7555
e-mail: racortech@parker.com

Dynacell Series

T-512

Part Number	Outlet Size	Weight
058447000	5.0 in. (12.7 cm) Outlet	60.5 lbs (27.2 kg)
060039000	5.0 in. (12.7 cm) Outlet w/Safety	60.5 lbs (27.2 kg)
066386002	5.0 in. (12.7 cm) Outlet h/Grav Bld	53.0 lbs (23.9 kg)
066401002	5.0 in. (12.7 cm) Outlet v/Grav Bld	55.0 lbs (23.9 kg)
066386003	5.0 in. (12.7 cm) Outlet h/Grav Bld/Safety	60.5 lbs (27.2 kg)
066401003	5.0 in. (12.7 cm) Outlet v/Grav Bld/Safety	60.5 lbs (27.2 kg)
066417002	5.0 in. (12.7 cm) Outlet h/Pos Pres Bld	53.0 lbs (23.9 kg)
066430002	5.0 in. (12.7 cm) Outlet v/Pos Pres Bld	55.0 lbs (23.9 kg)
066417003	5.0 in. (12.7 cm) Outlet h/Pos Pres w/Safety	60.5 lbs (27.2 kg)

T-519

Part Number	Outlet Size	Weight
058447000	5.0 in. (12.7 cm) Outlet	60.5 lbs (27.2 kg)
060039000	5.0 in. (12.7 cm) Outlet w/Safety	60.5 lbs (27.2 kg)
066386002	5.0 in. (12.7 cm) Outlet h/Grav Bld	53.0 lbs (23.9 kg)
066401002	5.0 in. (12.7 cm) Outlet v/Grav Bld	55.0 lbs (23.9 kg)
066386003	5.0 in. (12.7 cm) Outlet h/Grav Bld/Safety	60.5 lbs (27.2 kg)
066401003	5.0 in. (12.7 cm) Outlet v/Grav Bld/Safety	60.5 lbs (27.2 kg)
066417002	5.0 in. (12.7 cm) Outlet h/Pos Pres Bld	53.0 lbs (23.9 kg)
066430002	5.0 in. (12.7 cm) Outlet v/Pos Pres Bld	55.0 lbs (23.9 kg)
066417003	5.0 in. (12.7 cm) Outlet h/Pos Pres w/Safety	60.5 lbs (27.2 kg)
066430003	5.0 in. (12.7 cm) Outlet v/Pos Pres w/Safety	60.5 lbs (27.2 kg)

Dynacell Series

T-528

Part Number	Outlet Size	Weight
060144000	6.0 in. (15.2 cm) Outlet	53.0 lbs (23.9 kg)
060040000	6.0 in. (15.2 cm) Outlet w/Safety	53.0 lbs (23.9 kg)
066386005	6.0 in. (15.2 cm) Outlet h/Grav Bld	53.0 lbs (23.9 kg)
066401005	6.0 in. (15.2 cm) Outletv/Grav Bld	53.0 lbs (23.9 kg)
066386006	6.0 in. (15.2 cm) Outlet h/Grav Bld/Safety	60.5 lbs (27.2 kg)
066401006	6.0 in. (15.2 cm) Outlet v/Grav Bld/Safety	60.5 lbs (27.2 kg)
066417005	6.0 in. (15.2 cm) Outlet h/Pos Pres Bld	52.0 lbs (23.4 kg)
066430005	6.0 in. (15.2 cm) Outlet v/Pos Pres Bld	52.0 lbs (23.4 kg)
066417006	6.0 in. (15.2 cm) Outlet h/Pos Pres Bld/Safety	60.5 lbs (27.2 kg)
066430006	6.0 in. (15.2 cm) Outlet v/Pos Pres Bld/Safety	60.5 lbs (27.2 kg)
060146000	7.0 in. (17.7 cm) Outlet	72.0 lbs (32.4 kg)
060147000	7.0 in. (17.7 cm) Outlet w/Safety	106 lbs (47.7 kg)
066386008	7.0 in. (17.7 cm) Outlet h/Grav Bld	72.0 lbs (32.4 kg)
066430009	7.0 in. (17.7 cm) Outlet v/Pos Bld/Safety	106 lbs (47.7 kg)
066430008	7.0 in. (17.7 cm) Outlet v/Grav Bld/Safety	106 lbs (47.7 kg)
066386009	7.0 in. (17.7 cm) Outlet h/Grav Bld/Safety	106 lbs (47.7 kg)
066417008	7.0 in. (17.7 cm) Outlet h/Pos Press Bld	72.0 lbs (32.4 kg)
066417009	7.0 in. (17.7 cm) Outlet h/Pos Press Bld/Safety	106 lbs (47.7 kg)

Questions? Contact Technical Support:
800 344 3286 or 209 521 7860 ext. 7555
e-mail: racortech@parker.com

Dynacell T-Series Elements

Specifications	016411000	049261000	045800000	051800000
Housing	T-508	T-512	T-519	T-528
Width	19.0 in. (48.2 cm)	11.5 in. (	19.0 in. (48.2 cm)	28.5 in. (72.4 cm)
Height	5.0 in. (12.7 cm)	5.0 in. (12.7 cm)	5.0 in. (12.7 cm)	5.0 in. (12.7 cm)
Length	19.0 in. (48.2 cm)	15.0 in. (38.1 cm)	19.0 in. (48.2 cm)	19.0 in. (48.2 cm)
Weight	3.0 lbs (1.4 kg)	9.0 lbs (4.1 kg)	18.0 lbs (8.1 kg)	24.0 lbs (10.8 kg)

Specifications	048976000	049812000	060236000	060237000
Housing	T-519-D	T-528-D	T-512	T-519
Width	19.0 in. (48.2 cm)	28.5 in. (72.4 cm)	10.8 in. (27.4 cm)	14.8 in. (37.6 cm)
Height	5.0 in. (12.7 cm)	5.0 in. (12.7 cm)	1.6 in. (4.1 cm)	2.7 in. (6.9 cm)
Length	19.0 in. (48.2 cm)	19.0 in. (48.2 cm)	9.4 in. (23.9 cm)	16.9 in. (42.9 cm)
Weight	18.0 lbs (8.1 kg)	24.0 lbs (10.8 kg)	2.5 lbs (1.1 kg)	5.3 lbs (2.4 kg)

Specifications	060238000	052711000	060799000
Housing	T-528	T-520-DR	T-529-DR
Width	20.8 in. (52.8 cm)	19.5 in. (49.5 cm)	29.5 in. (74.9 cm)
Height	16.9 in. (42.9 cm)	19.5 in. (49.5 cm)	19.0 in. (48.3 cm)
Depth	3.0 in. (7.6 cm)	5.3 in. (13.5 cm)	5.4 in. (13.7 cm)
Weight	6.5 lbs (2.9 kg)	19.0 lbs (8.6 kg)	24.0 lbs (10.8 kg)

Dynacell Series

Specifications	099930001	099930002	099930003
Housing	RC-250	RC-300	RC-150
Width	5.3 in. (13.5 cm)	5.3 in. (13.5 cm)	5.3 in. (13.5 cm)
Height	14.0 in. (35.8 cm)	14.0 in. (35.8 cm)	14.0 in. (35.8 cm)
Length	36.1 in. (91.7 cm)	45.1 in. (114.6 cm)	22.5 in. (57.2 cm)
Weight	12.5 lbs (5.6 kg)	21.5 lbs (9.7 kg)	26.5 lbs (11.9 kg)

T-Series Gravity Discharge Superclone Pre-cleaners

Specifications	049470001	049470002	049470003
Bleed	Horizontal Right Hand	Horizontal Left Hand	Vertical Left Hand
Outlet Size	2.5 in. (6.4 cm)	2.5 in. (6.4 cm)	2.5 in. (6.4 cm)
Width	19.0 in. (48.3 cm)	19.0 in. (48.3 cm)	19.0 in. (48.3 cm)
Height	9.6 in. (24.4 cm)	9.6 in. (24.4 cm)	8.6 in. (21.8 cm)
Depth	6.8 in. (17.3 cm)	6.8 in. (17.3 cm)	6.8 in. (17.3 cm)
Weight	8.0 lbs (3.6 kg)	8.0 lbs (3.6 kg)	8.0 lbs (3.6 kg)

Specifications	049470004	049471001	049471002
Bleed	Horizontal Right Hand	Horizontal, Right Hand	Horizontal, Left Hand
Outlet Size	2.5 in. (6.4 cm)	2.0 in. (5.1 cm)	2.0 in. (5.1 cm)
Width	19.0 in. (48.3 cm)	11.5 in. (29.2 cm)	11.5 in. (29.2 cm)
Height	8.6 in. (21.8 cm)	9.1 in. (23.1 cm)	9.1 in. (23.1 cm)
Depth	6.8 in. (17.3 cm)	6.8 in. (17.3 cm)	6.8 in. (17.3 cm)
Weight	8.0 lbs (3.6 kg)	4.0 lbs (1.8 kg)	4.0 lbs (1.8 kg)

Specifications	049471003	049471004	051793001
Bleed	Vertical, Left Hand	Vertical, Right Hand	Horizontal Dual Bleed
Outlet Size	2.5 in. (6.4 cm)	2.0 in. (5.1 cm)	2.7 in. (6.9 cm)
Width	19.0 in. (48.3 cm)	11.5 in. (29.2 cm)	28.5 in. (72.4 cm)
Height	8.1 in. (20.6 cm)	8.1 in. (20.6 cm)	5.7 in. (14.5 cm)
Depth	6.8 in. (17.3 cm)	6.8 in. (17.3 cm)	6.8 in. (17.3 cm)
Weight	8.0 lbs (3.6 kg)	4.0 lbs (1.8 kg)	16.0 lbs (7.2 kg)

Dynacell Series

Positive Pressure Superclones

F

T-512

Specifications	060095001	060095002	061334001	061334002
Air Flow Rate	250-500 cfm (7.1-14.2 cmm)	250-500 cfm (7.1-14.2 cmm)	550-1000 cfm (15.6-28.3 cmm)	550-1000 cfm (15.6-28.3 cmm)
Bleed Connection 1/2" NPT	Horizontal Right Hand	Horizontal Left Hand	Vertical Left Hand	Vertical Right Hand
Comp Air Nozzel	**060876000**			
Outlet Size	2.0 in. (5.1 cm)	2.0 in. (5.1 cm)	1.5 in. (3.8 cm)	1.5 in. (3.8 cm)
Width	11.5 in. (29.2 cm)	11.5 in. (29.2 cm)	11.5 in. (29.2 cm)	11.5 in. (29.2 cm)
Height	8.9 in. (22.6 cm)	8.9 in. (22.6 cm)	8.9 in. (22.6 cm)	8.9 in. (22.6 cm)
Depth	6.8 in. (17.3 cm)	6.8 in. (17.3 cm)	6.8 in. (17.3 cm)	6.8 in. (17.3 cm)
Weight	5.0 lbs (2.3 kg)	5.0 lbs (2.3 kg)	6.0 lbs (2.7 kg)	6.0 lbs (2.7 kg)

Questions? Contact Technical Support:
800 344 3286 or 209 521 7860 ext. 7555
e-mail: racortech@parker.com

Parker Racor

Dynacell Series

T-519

Specifications	060096001	060096002	061335001	061335002
Air Flow Rate	500-1000 cfm (14.2-28.3 cmm)	500-1000 cfm (14.2-28.3 cmm)	500-1000 cfm (14.2-28.3 cmm)	500-1000 cfm (14.2-28.3 cmm)
Bleed Connection 1/2" NPT	Horizontal Right Hand	Horizontal Left Hand	Vertical Right Hand	Vertical Left Hand
Comp Air Nozzel	060876000			
Outlet Size	2.0 in. (5.1 cm)	2.0 in. (5.1 cm)	2.0 in. (5.1 cm)	2.0 in. (5.1 cm)
Width	19.0 in. (48.3 cm)	19.0 in. (48.3 cm)	19.0 in. (48.3 cm)	19.0 in. (48.3 cm)
Height	8.9 in. (22.6 cm)	8.9 in. (22.6 cm)	8.9 in. (22.6 cm)	8.9 in. (22.6 cm)
Depth	6.8 in. (17.3 cm)	6.8 in. (17.3 cm)	6.8 in. (17.3 cm)	6.8 in. (17.3 cm)
Weight	9.0 lbs (4.1 kg)	9.0 lbs (4.1 kg)	10.0 lbs (4.5 kg)	10.0 lbs (4.5 kg)

T-528

Specifications	061336001	061336002
Air Flow Rate	1050 cfm (29.7 cmm)	1050 cfm (29.7 cmm)
Bleed Connection 1/2" NPT	Vertical Left Hand	Vertical Right Hand
Comp Air Nozzel	060876000	
Outlet Size	2.0 in. (5.1 cm)	2.0 in. (5.1 cm)
Width	28.5 in. (72.4 cm)	28.5 in. (72.4 cm)
Height	5.7 in. (14.5 cm)	5.7 in. (14.5 cm)
Depth	6.8 in. (17.8 cm)	6.8 in. (17.8 cm)
Weight	17.0 lbs (7.7 kg)	17.0 lbs (7.7 kg)

Dynacell Accessories

F

Part Number	Dynacell	Wieght
049890001	T-512 Filter Strap	1.0 lbs (0.5 kg)
049890003	T-519 Filter Strap	1.5 lbs (0.7 kg)
051799000	T-528 Filter Strap	2.2 lbs (1.0 kg)
049891000	Dynacell Clamping Bracket	0.5 lbs (0.2 kg)
050073000	Locator Angle	0.2 lbs (0.1 kg)
051884001	T-512 Retaining Frame	1.5 lbs (0.7 kg)
051884002	T-519 Retaining Frame	2.0 lbs (0.9 kg)
051884003	T-528 Retaining Frame	2.5 lbs (1.1 kg)
059599001	T-512 Sealing Frame	1.5 lbs (0.7 kg)
059599002	T-519 Sealing Frame	2.0 lbs (0.9 kg)
059599003	T-528 Sealing Frame	2.5 lbs (1.1 kg)
043910203	Bolt 5/16”	0.1 lbs (0.0 kg)
038105007	Flange Nut 5/16”	0.1 lbs (0.0 kg)
035588000	T-512 Bleed Valve	0.5 lbs (0.2 kg)
049780000	T-519 / T-528 Bleed Valve	0.5 lbs (0.2 kg)
050727000	Vibration Isolator For T-512, T-519 and T-528	0.7 lbs (0.3 kg)

Washable Filters

Air Filter Replacements

Parker Hannifin Corporation, Racor Division guarantees that each new Long Life Air Filter Element will provide a minimum of Twice The Life service compared to a conventional pleated paper type air filter element, if it is installed properly and serviced according to the manufacturer's recommended procedures.

If any Long Life Air Filter element fails to provide you with at least (Twice The Life) of a leading conventional pleated paper type air filter element, Racor will replace the air filter, free of charge.

Long life filters use a multi staged depth media with oil impregnated cotton gauze, to be sandwiched between pleated epoxy coated aluminum wire-mesh, and a molded polyurethane sealing surfaces.

- **Holds up to 8 times more contaminants than conventional paper filters.**
- **Provides a minimum of twice the service life of conventional paper filters.**
- **Increase fuel economy due to lower initial restriction.**
- **Prevents corrosion by repelling water.**

AF M81xx Series

AF M80xx Series

AFM82006
Air Filter Cleaning Kit

Questions? Contact Technical Support:
800 344 3286 or 209 521 7860 ext. 7555
e-mail: racortech@parker.com

Washable & Reusable

Racor offers direct replacements for the intake air filter portion of competitive air filters & silencers. Also available is the replacement element for the vacuum limiter air separator.

The filter media for all replacement filters is an oil-impregnated cotton gauze and is sandwiched between pleated, epoxy-coated aluminum wire-mesh polyurethane sealed surfaces. This product is cleanable and must be oiled before re-using

Specifications	AFTFP2062-1	AFTRD1690	AFTFP2056
Application	Chevrolet Air Filter Flat Panel	Chevrolet Air Filter	Air Filter-Dodge Cummins T/d
Description	Turbo/Non Turbo	Turbo/Non Turbo	Ram 1500, 2500, 3500, Turbo
Year	1993 - 1996	1992 - 1995	1994 - 2002
Engine	6.5L V8 Diesel	6.5L V8, 6.2L V8 Diesel	5.9L L6 Diesel

Specifications	AFTRD1023	AFTRD1946	AFTRD1460
Application	Air Filter-Dodge Cummins P/U	Air Filter, Ford F Series P/U	Air Filter, Ford
Description	Turbo	Turbo	Turbo/Non Turbo
Year	1989 - 1993	1994 - 1998	1994 - 1996
Engine	5.9L L6 Diesel	7.3L V8 Diesel	7.3L V8 Diesel

Washable Filters

Washable Filters

- **Directly replaces competitive service elements.**
- **Marine Direct Replacements.**

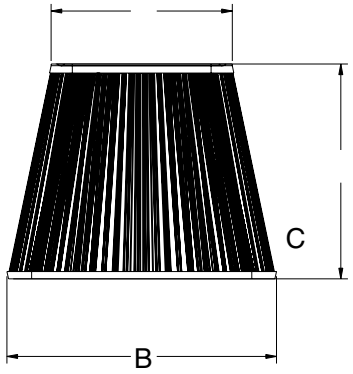

Specifications		AF M8010*	AF M8021	AF M8025
Diameter	**A** **B**	2.2 in. (5.6 cm) 3.0 in. (7.6 cm)	5.1 in. (13.0 cm) 7.5 in. (19.1 cm)	5.1 in. (13.0 cm) 7.5 in. (19.1 cm)
Height	**C**	3.2 in. (8.1 cm)	6.0 in. (15.2 cm)	8.0 in. (20.3 cm)
Walker Part #		CD180	CD194	CD125
* Air Separator Element				

Specifications		AF M8026	AF M8033	AF M8034
Diameter	**A** **B**	5.1 in. (13.0 cm) 7.5 in. (19.1 cm)	6.9 in. (17.5 cm) 9.0 in. (22.9 cm)	6.9 in. (17.5 cm) 9.0 in. (22.9 cm)
Height	**C**	10.0 in. (25.4 cm)	12.0 in. (30.5 cm)	9.0 in. (22.9 cm)
Walker Part #		CD190	CD197	CD196

Specifications		AF M8037	AF M8047
Diameter	**A** **B**	6.9 in. (17.5 cm) 9.0 in. (22.9 cm)	7.0 in. (17.8 cm) 10.0 in. (25.4 cm)
Height	**C**	14.0 in. (35.6 cm)	14.0 in. (35.6 cm)
Walker Part #		CD184	CD185

Questions? Contact Technical Support:
800 344 3286 or 209 521 7860 ext. 7555
e-mail: racortech@parker.com

Washable Filters

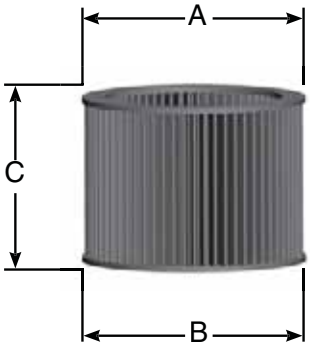

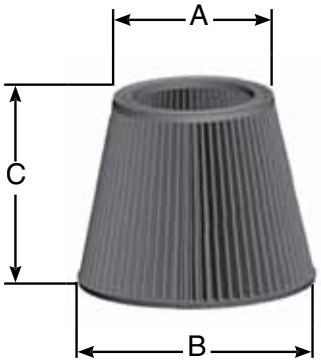

Walker Part #		CD169	CD170	CD173
Diameter	**A**	16.0 in. (40.6 cm)	10.0 in. (25.4 cm)	7.5 in. (19.1 cm)
Diameter	**B**	16.0 in. (40.6 cm)	10.0 in. (25.4 cm)	7.5 in. (19.1 cm)
Height	**C**	16.0 in. (40.6 cm)	8.0 in. (20.3 cm)	5.0 in. (12.7 cm)
Racor Part #		**N/A**	**AF M8145**	**N/A**

Walker Part #		CD174	CD175	CD176
Diameter	**A**	7.5 in. (19.1 cm)	7.5 in. (19.1 cm)	7.5 in. (19.1 cm)
Diameter	**B**	7.5 in. (19.1 cm)	7.5 in. (19.1 cm)	7.5 in. (19.1 cm)
Height	**C**	6.0 in. (15.2 cm)	7.0 in. (17.8 cm)	8.0 in. (20.3 cm)
Racor Part #		**AF M8121**	**AF M8122**	**AF M8123**

Walker Part #		CD177	CD178	CD180
Diameter	**A**	7.5 in. (19.1 cm)	7.5 in. (19.1 cm)	3.0 in. (7.6 cm)
Diameter	**B**	7.5 in. (19.1 cm)	7.5 in. (19.1 cm)	3.0 in. (7.6 cm)
Height	**C**	9.0 in. (22.9 cm)	10.0 in. (25.4 cm)	3.0 in. (7.6 cm)
Racor Part #		**AF M8124**	**AF M8126**	**AF M8010**

Washable Filters

Competitive Part Numbers	Racor Part Numbers	Dimensions (D x H x W)
CD187	**AF M8156**	12 x 10 x 12
CD189	**N/A**	12 x 14 x 12
CD190	**AF M8026**	7.5 x 10 x 5.125
CD194	**AF M8021**	7.5 x 6 x 5.125
CD195	**AF M8025**	7.5 x 8 x 5.125
CD196	**AF M8034**	9 x 9
CD197	**AF M8033**	9 x 12
CD200	**AF M8134**	9 x 9 x 9
CD201	**AF M8133**	9 x 12 x 9
CD202	**AF M8141**	10 x 6 x 10
CD203	**AF M8151**	12 x 6 x 12
CD204	**AF M8155**	12 x 8 x 12
Detroit Diesel PN.		
23508033	**AF M8033**	12” Filter
23508034	**AF M8034**	9” Filter

Questions? Contact Technical Support:
800 344 3286 or 209 521 7860 ext. 7555
e-mail: racortech@parker.com

Air Dryers

DU, DR and NX Series

A majority of on highway trucks, buses, emergency vehicles, and motor coaches utilize air braking systems. A compressor delivers pressurized air to a reservoir or tank on the vehicle. The compressed air contains atmospheric water vapor, which must be removed. If not removed, the vapor will condense and collect in the reservoir or in other components in the braking system. This water can cause corrosion in the braking system, and can freeze in cold climates, rendering the brakes inoperable. Vehicles with air brakes require an air drying system to remove the water vapor before the compressed air enters the brake system reservoir.

Racor has teamed up with Nabtesco Corporation to provide a full line of proven high quality compressed air drying systems. The Racor/Nabtesco air dryers utilize a proprietary high performance desiccant that is more durable and has better moisture removing capacity than competitive systems. Racor offers six sizes to assure the correct air dryer is available for your application. See chart on back for more details.

Benefits

- **Removes moisture to help with the normal operation of pneumatic equipment**
- **Heater available with all models**
- **Automatic regeneration of desiccant**
- **2.0mm high-performance desiccant is standard in all models (1.6mm on DU-4)**
- **Integral governor and check valve (except DR-6 model)**
- **Integral purge chamber**
- **Prevents accumulation of moisture which can freeze during winter or in cold climate operation**
- **Rugged and reliable**

F

Questions? Contact Technical Support:
800 344 3286 or 209 521 7860 ext. 7555
e-mail: racortech@parker.com

Parker Racor

Air Dryers

Overview

Specifications	DU-4	DU-3 (Standard)	DU-3 (Extended)	DU-5	DR-6	NX-65
Application	Class 6 and under (also for air suspension, hydraulic brake system), GVW less than 26,000 lbs	Class 7, GVW from 26,001 to 33,000 lbs	Class 7, GVW from 26,001 to 33,000 lbs	Class 8, GVW from 33,001 to 44,000 lbs	Class 8, GVW greater than 44,001	For all applications
Inlet/Outlet Ports	1/2" NPTF	1/2" NPTF	1/2" NPTF	1/2" NPTF	1/2" NPTF	1/2" NPTF
Standard Flow per Cycle*	3,051 in.^{3} (50L)	6,041 in.^{3} (99L)	9,459 in.^{3} (155L)	11,594 in.^{3} (190L)	24,409 in.^{3} (400L)	26,850 in.^{3} (440L)**
Desiccant Weight (1.6mm standard)	0.4 lbs (0.2 kg)	1.1 lbs (0.5 kg)	1.1 lbs (0.5 kg)	2.4 lbs (1.1 kg)	4.0 lbs (1.8 kg)	1.8lbs (0.8 kg)
Regenerate Time Required	30 seconds	50 seconds	40 seconds	50 seconds	60 seconds	60 seconds
Purge Chamber Capacity	61 in.^{3} (1.0L)	85 in.^{3} (1.4L)	85 in.^{3} (1.4L)	165 in.^{3} (2.7L)	208 in.^{3} (3.4L)	183 in.^{3} (3.0L)
Height	11.9 in. (30.1 cm)	12.8 in. (32.4 cm)	13.4 in. (34.0 cm)	14.9 in. (38.0 cm)	13.7 in. (34.9 cm)	12.8 in. (32.6 cm)
Width	6.32 in. (16.1 cm)	7.1 in. (18.1 cm)	7.1 in. (18.1 cm)	8.8 in. (22.3 cm)	9.8 in. (24.8 cm)	7.5 in. (19.0 cm)
Approx. Weight	7.9 lbs (3,6 kg)	12.3 lbs (5.6 kg)	12.3 lbs (5.6 kg)	21.1 lbs (9.6 kg)	30.1 lbs (13.7 kg)	19.8 lbs (9.0 kg)
Also Included:						
Heater (12V)	yes (70W)	yes (70W)	yes (70W)	yes (70W)	yes (100W)	yes (70W)
Purge Chamber	yes	yes	yes	yes	yes	yes
Pressure Governor	yes	yes	yes	yes	no	yes
Check Valve	yes	yes	yes	yes	no	yes
Silencer	no	no	no	no	no	yes
Governor Cut-Out Pressure	100-129 PSI (6.9-8.9 bar)	100-129 PSI (6.9-8.9 bar)	100-129 PSI (6.9-8.9 bar)	100-139 PSI (6.9-9.6 bar)	139 PSI*** (9.6 bar)	116-174 PSI (8-12 bar)
Governor Differential Pressure	14.5 PSI (1.0 bar) 18.8 PSI (1.3 bar)	14.5 PSI (1.0 bar) 18.8 PSI (1.3 bar)	14.5 PSI (1.0 bar) 18.8 PSI (1.3 bar)	14.5 PSI (1.0 bar) 18.8 PSI (1.3 bar)	N/A	13 PSI (0.9 bar) 29 PSI (2.0 bar)
Air Reservoir Volume	13 gal (at 14.5 PSI) 10 gal (at 18.8 PSI)	26 gal (at 14.5 PSI) 20 gal (at 18.8 PSI)	40 gal (at 14.5 PSI) 31 gal (at 18.8 PSI)	50 gal (at 14.5 PSI) 38 gal (at 18.8 PSI)	N/A	depends on governor diff. PSI
Amb. Temp. Range	-22˚F to +158˚F (-30˚C to + 70˚C)					

Note: *Inlet temperature at 140˚F (60˚C)
**Governor cut-out pressure 159 PSI (11 bar)
***Applicable pressure

Questions? Contact Technical Support:
800 344 3286 or 209 521 7860 ext. 7555
e-mail: racortech@parker.com

Air Accessories

Air accessories include all parts that are used in assemblies, filters, units and elements for Racor products. The Racor lineup includes heavy-duty air cleaners and pre-cleaners, marine filter/silencers, cabin air filters and replacement filters. All are super high-efficiency, with engineered, application specific media that improves performance as it extends service life. Whatever your application, there's a Racor Air Filtration System that will help you and your engine breathe easy.

Restriction Indicators

Rubber Elbows and Fittings

Cleaning Kit AFM82006

Hose Clamps

Mounting Clamps

Air Accessories

T-Bolt Clamp

Part Number	Size	Weight
111657004	3.3 in. (8.3 cm) to 3.6 in. (9.1 cm)	0.10 lbs (0.0 kg)
111657006	4.3 in. (10.9 cm) to 4.6 in. (11.6 cm)	0.12 lbs (0.1 kg)
111657008	5.3 in. (13.4 cm) to 5.6 in. (14.2 cm)	0.15 lbs (0.1 kg)
111657009	5.8 in. (14.7 cm) to 6.1 in. (15.4 cm)	0.17 lbs (0.1 kg)
111657010	6.3 in. (16.0 cm) to 6.6 in. (16.7 cm)	0.18 lbs (0.1 kg)
111657011	7.4 in. (18.7 cm) to 7.7 in. (19.5 cm)	0.20 lbs (0.1 kg)
111657012	8.4 in. (21.3 cm) to 8.7 in. (22.0 cm)	0.22 lbs (0.1 kg)
111657013	6.7 in. (17.0 cm) to 7.1 in. (18.0 cm)	0.36 lbs (0.2 kg)
111657014	7.7 in. (19.5 cm) to 8.1 in. (20.5 cm)	0.21 lbs (0.1 kg)
111657015	8.5 in. (21.5 cm) to 8.8 in. (22.3 cm)	0.22 lbs (0.1 kg)
111657016	9.7 in. (24.6 cm) to 10.0 in. (25.4 cm)	0.26 lbs (0.1 kg)

Questions? Contact Technical Support:
800 344 3286 or 209 521 7860 ext. 7555
e-mail: racortech@parker.com

Air Accessories

Hose Clamp

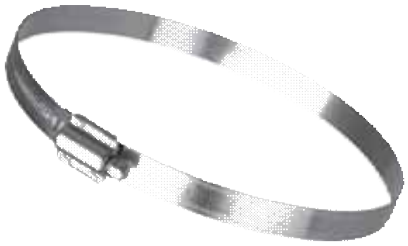

F

Part Number	Size	Weight
004690002 - 004690004	2.1 in. (5.3 cm) to 3.0 in. (7.6 cm)	0.06 lbs (0.0 kg)
004690005	2.6 in. (6.6 cm) to 3.5 in. (8.9 cm)	0.06 lbs (0.0 kg)
004690006	2.8 in. (7.1 cm) to 4.6 in. (11.7 cm)	0.06 lbs (0.0 kg)
004690007	4.6 in. (11.7 cm) to 5.5 in. (14.0 cm)	0.06 lbs (0.0 kg)
004690008	5.1 in. (13.0 cm) to 6.0 in. (15.2 cm)	0.06 lbs (0.0 kg)
004690009	1.2 in. (3.0 cm) to 1.8 in. (4.6 cm)	0.06 lbs (0.0 kg)
004690010	1.1 in. (2.8 cm) to 2.5 in. (6.4 cm)	0.06 lbs (0.0 kg)
004690011	4.1 in. (10.4 cm) to 5.0 in. (12.7 cm)	0.06 lbs (0.0 kg)
004690012	5.6 in. (14.2 cm) to 6.5 in. (16.5 cm)	0.06 lbs (0.0 kg)
004690013	3.1 in. (7.9 cm) to 4.0 in. (10.2 cm)	0.06 lbs (0.0 kg)
004690014	6.1 in. (15.5 cm) to 7.0 in. (17.8 cm)	0.06 lbs (0.0 kg)
004690015	6.9 in. (17.5 cm) to 7.8 in. (19.8 cm)	0.06 lbs (0.0 kg)
004690017	9.1 in. (23.1 cm) to 10.0 in. (25.4 cm)	0.06 lbs (0.0 kg)
004690018	7.6 in. (19.3 cm) to 8.5 in. (21.6 cm)	0.06 lbs (0.0 kg)
004690019	9.9 in. (25.1 cm) to 10.8 in. (27.4 cm)	0.06 lbs (0.0 kg)

Air Accessories

Mounting Clamps

- **Installs by matching element diameter.**
- **For the ECO Series.**

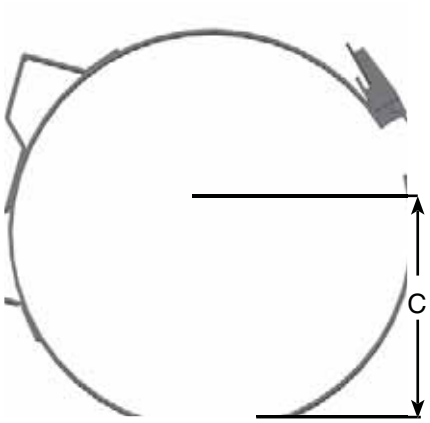

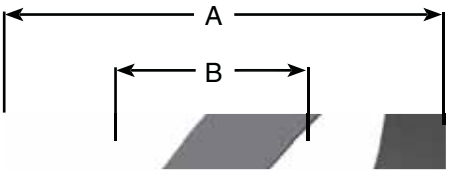

	Dimensions		
Part Number	**A**	**B**	**C**
071921001	9.8	4.5	5.5
071921002	11.0	5.0	6.1
071921003	13.5	6.0	7.4
071921004	11.0	5.0	6.1
071921006	15.0	6.0	8.2
099049001	6.9	3.5	5.1
099049002	7.9	3.5	5.6
099049003	9.8	4.5	6.6

Part Number	Description	Weight
071921001	Clamp Powder Coated ECO 10”	1.3 lbs (0.6 kg)
071921002	Clamp Powder Coated ECO 11”	1.4 lbs (0.6 kg)
071921003	Clamp Powder Coated ECO 13”	1.6 lbs (0.7 kg)
071921004	Clamp Powder Coated ECO 11” (90)	1.4 lbs (0.6 kg)
071921006	Clamp Powder Coated ECO 15”	1.6 lbs (0.7 kg)
099049001	Clamp Powder Coated ECO-SE 6.75”	0.6 lbs (0.3 kg)
099049002	Clamp Powder Coated ECO-SE 7.75”	0.7 lbs (0.3 kg)
099049003	Clamp Powder Coated ECO-SE 9.75”	0.8 lbs (0.4 kg)

Note: Two required for installation

Air Accessories

Restriction Indicators

- **Restrictions from 4 to 25 in. H_2O.**
- **Direct or remote mount.**

90° Fitting

Part Number	Range (in H_2O vac.)	Description
400033015 [1]	3-15”	Direct Mount
400033020 [1]	4-20”	Direct Mount
400033025 [1]	4-25”	Direct Mount
014440001 [1]	4-25”	Direct Mount with 90° fitting
072604000 [2]	4-25”	Remote Mount
076248001 [1]	8-25”	Dash Mount
014439000	4-25”	N/A
039135001	7-25”	Adaptor Kit

[1] Unit standard with a 1/8”-27 NPT straight fitting.
[2] Unit standard with a 90° coupling and 10’ hose.

Filter Monitor

Part Number	Range (in H_2O vac.)	Description
500198020	20”	Filter Monitor
500198025	25”	Filter Monitor

Accessories

Part Number	Range (in H_2O vac.)	Description
400034000	90 Degree Fitting	Adapts To Straight Fitting

Air Accessories

Inlet Cap

- **Installs by matching element diameter.**
- **Provides straight through connection**

Specifications	111810001	111810002	111810003
Diameter	6.8 in. (17.3 cm)	7.8 in. (19.8 cm)	9.8 in. (24.9 cm)
Inlet Size	4.0 in. (12.7 cm)	5.0 in. (12.7 cm)	6.0 in. (15.2 cm)
Slots	Yes	Yes	Yes
Screen	No	No	No
Weight	0.4 lbs (0.2 kg)	0.4 lbs (0.2 kg)	0.4 lbs (0.2 kg)

Specifications	114088001	114088002	114088003
Diameter	6.8 in. (17.3 cm)	7.8 in. (19.8 cm)	9.7 in. (24.6 cm)
Inlet Size	6.4 in. (16.3 cm)	7.4 in. (18.8 cm)	9.4 in. (23.9 cm)
Slots	No	No	No
Screen	Yes	Yes	Yes
Weight	0.3 lbs (0.1 kg)	0.3 lbs (0.1 kg)	0.4 lbs (0.2 kg)

Questions? Contact Technical Support:
800 344 3286 or 209 521 7860 ext. 7555
e-mail: racortech@parker.com

Air Accessories

Fittings, Elbows, and Adapters

Low resistance rubber adapters with clamps provide a positive sealing environment, with minimal airflow restriction and easy servicing rubber fittings will save you time and money. Racor rubber air inlet fittings are made of high quality EPDM rubber, and provide minimum airflow restriction between the air cleaner and engine air inlet. The flexibility simplifies both installation and service. Stainless steel adjustable clamps assure a positive seal and ease of service.

Questions? Contact Technical Support:
800 344 3286 or 209 521 7860 ext. 7555
e-mail: racortech@parker.com

Parker Racor

Air Accessories

Intake Couplings

Specifications	015094009	015094010	015094011	015094012
I.D.	3.5 in. (8.9 cm)	4.0 in. (10.2 cm)	5.5 in. (14.0 cm)	7.0 in. (17.8 cm)
O.D.	4.0 in. (10.2 cm)	4.5 in. (11.4 cm)	6.0 in. (15.2 cm)	7.5 in. (19.0 cm)
Width	5.3 in. (13.5 cm)	5.3 in. (13.5 cm)	6.0 in. (15.2 cm)	7.0 in. (17.8 cm)
Weight	1.0 lbs (0.5 kg)	1.2 lbs (0.5 kg)	1.5 lbs (0.7 kg)	2.5 lbs (1.1 kg)

Specifications	015094017	015094018	015094021	015094039
I.D.	5.0 in. (12.7 cm)	6.0 in. (15.2 cm)	8.0 in. (20.3 cm)	3.0 in. (7.6 cm)
O.D.	5.5 in. (14.0 cm)	6.5 in. (16.5 cm)	8.6 in. (21.8 cm)	3.5 in. (8.9 cm)
Width	6.0 in. (15.2 cm)	6.0 in. (15.2 cm)	8.0 in. (20.3 cm)	5.2 in. (13.2 cm)
Weight	1.5 lbs (0.7 kg)	2.0 lbs (0.9 kg)	4.0 lbs (1.8 kg)	1.0 lbs (0.5 kg)

Specifications	015094040	015094046	015094116	015094117
I.D.	10.0 in. (25.4 cm)	4.5 in. (11.4 cm)	5.0 in. (12.7 cm)	8.0 in. (20.3 cm)
O.D.	10.5 in. (26.7 cm)	5.0 in. (12.7 cm)	5.5 in. (14.0 cm)	8.5 in. (21.6 cm)
Width	6.0 in. (15.2 cm)	6.0 in. (15.2 cm)	4.9 in. (12.4 cm)	5.0 in. (12.7 cm)
Weight	4.0 lbs (1.8 kg)	4.0 lbs (1.8 kg)	4.0 lbs (1.8 kg)	4.0 lbs (1.8 kg)

Questions? Contact Technical Support:
800 344 3286 or 209 521 7860 ext. 7555
e-mail: racortech@parker.com

Hump Hose Reducer

Specifications	015094022	015094023	015094024	015094026
I.D.	5.0 in. (12.7 cm) 6.0 in. (15.2 cm)	5.5 in. (14.0 cm) 6.0 in. (15.2 cm)	5.0 in. (12.7 cm) 5.5 in. (14.0 cm)	4.0 in. (10.2 cm) 5.5 in. (14.0 cm)
O.D.	5.5 in. (14.0 cm) 6.5 in. (16.5 cm)	6.0 in. (15.2 cm) 6.5 in. (16.5 cm)	5.5 in. (14.0 cm) 6.0 in. (15.2 cm)	4.5 in. (11.4 cm) 6.0 in. (15.2 cm)
Width	6.0 in. (15.2 cm)	6.0 in. (15.2 cm)	6.0 in. (15.2 cm)	6.0 in. (15.2 cm)
Weight	1.9 lbs (0.9 kg)	2.0 lbs (0.9 kg)	1.7 lbs (0.8 kg)	2.0 lbs (0.9 kg)

Specifications	015094027	015094031	015094032	015094037
I.D.	3.0 in. (7.6 cm) 3.5 in. (8.9 cm)	5.5 in. (14.0 cm) 7.0 in. (17.8 cm)	7.0 in. (17.8 cm) 8.0 in. (20.3 cm)	5.0 in. (12.7 cm) 7.0 in. (17.8 cm)
O.D.	3.5 in. (8.9 cm) 4.0 in. (10.2 cm)	6.0 in. (15.2 cm) 7.5 in. (19.1 cm)	7.5 in. (19.1 cm) 8.5 in. (21.6 cm)	5.5 in. (14.0 cm) 7.5 in. (19.1 cm)
Width	6.0 in. (15.2 cm)	7.0 in. (17.8 cm)	5.0 in. (12.7 cm)	7.0 in. (17.8 cm)
Weight	2.0 lbs (0.9 kg)	5.0 lbs (2.3 kg)	4.5 lbs (2.0 kg)	1.9 lbs (0.9 kg)

Air Accessories

Hose Reducer

Specifications	015094045	015094060	015094061	015094062
I.D.	6.0 in. (15.2 cm) 7.0 in. (17.8 cm)	2.5 in. (6.4 cm) 3.0 in. (7.6 cm)	3.0 in. (7.6 cm) 4.0 in. (10.2 cm)	8.0 in. (20.3 cm) 10.0 in. (25.4 cm)
O.D.	6.5 in. (16.5 cm) 7.5 in. (19.1 cm)	3.0 in. (7.6 cm) 3.5 in. (8.9 cm)	3.5 in. (8.9 cm) 4.5 in. (11.4 cm)	8.5 in (21.6 cm) 10.5 in. (26.7 cm)
Width	6.0 in. (15.2 cm)	6.0 in. (15.2 cm)	5.3 in. (13.5 cm)	6.0 in. (15.2 cm)
Weight	4.0 lbs (1.8 kg)	4.0 lbs (1.8 kg)	4.0 lbs (1.8 kg)	4.5 lbs (2.0 kg)

Specifications	015094065	015094073	015094086	015094092
I.D.	4.0 in. (10.2 cm) 5.0 in. (12.7 cm)	4.0 in. (10.2 cm) 4.5 in. (11.4 cm)	5.5 in. (14.0 cm) 8.0 in. (20.3 cm)	6.0 in. (15.2 cm) 8.0 in. (20.3 cm)
O.D.	4.5 in. (11.4 cm) 5.5 in. (14.0 cm)	4.5 in. (11.4 cm) 5.0 in. (12.7 cm)	6.0 in. (15.2 cm) 8.5 in. (21.6 cm)	6.5 in. (16.5 cm) 8.5 in. (21.6 cm)
Width	6.0 in. (15.2 cm)	6.0 in. (15.2 cm)	7.0 in. (17.8 cm)	6.0 in. (15.2 cm)
Weight	1.9 lbs (0.9 kg)	1.9 lbs (0.9 kg)	4.0 lbs (1.8 kg)	4.0 lbs (1.8 kg)

Specifications	015094105	015094106	015094111	015094113
I.D.	3.5 in. (8.9 cm) 4.0 in. (10.2 cm)	4.0 in. (10.2 cm) 6.0 in. (15.2 cm)	2.8 in. (7.1 cm) 3.0 in. (7.6 cm)	2.8 in. (7.1 cm) 4.0 in. (10.2 cm)
O.D.	4.0 in. (10.2 cm) 4.5 in. (11.4 cm)	4.5 in. (11.4 cm) 6.5 in. (16.5 cm)	3.3 in. (8.4 cm) 3.5 in. (8.9 cm)	3.3 in. (8.4 cm) 4.5 in. (11.4 cm)
Width	5.3 in. (13.5 cm)	6.0 in. (15.2 cm)	3.5 in. (8.9 cm)	4.0 in. (10.2 cm)
Weight	1.2 lbs (0.5 kg)	2.9 lbs (1.3 kg)	1.2 lbs (0.5 kg)	1.9 lbs (0.9 kg)

Specifications	015094114	015094115
I.D.	2.5 in. (6.4 cm) 3.5 in. (8.9 cm)	2.4 in. (6.1 cm) 3.0 in. (7.6 cm)
O.D.	3.0 in. (7.6 cm) 4.0 in. (10.2 cm)	2.9 in. (7.4 cm) 3.5 in. (8.9 cm)
Width	6.0 in. (15.2 cm)	7.0 in. (17.8 cm)
Weight	1.9 lbs (0.9 kg)	1.9 lbs (0.9 kg)

Questions? Contact Technical Support:
800 344 3286 or 209 521 7860 ext. 7555
e-mail: racortech@parker.com

Insert Sleeves

Specifications	015094036	015094043	015094064	015094072
I.D.	5.0 in. (12.7 cm)	5.5 in. (14.0 cm)	5.0 in. (12.7 cm)	4.0 in. (10.2 cm)
O.D.	5.5 in. (14.0 cm)	5.0 in. (12.7 cm)	5.0 in. (12.7 cm)	5.0 in. (12.7 cm)
Width	1.8 in. (4.6 cm)	1.8 in. (4.6 cm)	1.8 in. (4.6 cm)	1.8 in. (4.6 cm)
Weight	1.9 lbs (0.9 kg)	1.9 lbs (0.9 kg)	1.9 lbs (0.9 kg)	1.9 lbs (0.9 kg)

Specifications	015094080	015094081	015094082	015094089
I.D.	3.0 in. (7.6 cm)	6.0 in. (15.2 cm)	8.0 in. (20.3 cm)	2.8 in. (7.1 cm)
O.D.	4.0 in. (10.2 cm)	7.0 in. (17.8 cm)	9.0 in. (22.9 cm)	4.0 in. (10.2 cm)
Width	1.8 in. (4.6 cm)	1.8 in. (4.6 cm)	1.8 in. (4.6 cm)	1.8 in. (4.6 cm)
Weight	1.9 lbs (0.9 kg)	4.0 lbs (1.8 kg)	4.0 lbs (1.8 kg)	4.0 lbs (1.8 kg)

Specifications	015094094	015094096	015094102	015094103	015094104
I.D.	2.3 in. (5.8 cm)	6.3 in. (16.0 cm)	4.5 in. (11.4 cm)	4.0 in. (10.2 cm)	4.0 in. (10.2 cm)
O.D.	2.5 in. (6.4 cm)	7.0 in. (17.8 cm)	5.0 in. (12.7 cm)	5.5 in. (14.0 cm)	4.5 in. (11.4 cm)
Width	1.8 in. (4.6 cm)	1.8 in. (4.6 cm)	1.8 in. (4.6 cm)	1.8 in. (4.6 cm)	1.8 in. (4.6 cm)
Weight	1.2 lbs (0.5 kg)	4.0 lbs (1.8 kg)	4.0 lbs (1.8 kg)	4.0 lbs (1.8 kg)	4.0 lbs (1.8 kg)

Air Accessories

Sleeves

Specifications	015094047	015094048	015094049	015094050
I.D.	2.8 in. (7.1 cm)	3.5 in. (8.9 cm)	3.5 in. (8.9 cm)	4.8 in. (12.2 cm)
O.D.	3.2 in. (8.1 cm)	4.0 in. (10.2 cm)	4.0 in. (10.2 cm)	5.1 in. (13.0 cm)
Width	2.4 in. (6.1 cm)	2.5 in. (6.1 cm)	3.0 in. (7.6 cm)	3.2 in. (8.1 cm)
Weight	1.2 lbs (0.5 kg)	N/A	1.9 lbs (0.9 kg)	N/A

Specifications	015094051	015094052	015094053	015094054
I.D.	5.5 in. (14.0 cm)	5.5 in. (14.0 cm)	6.0 in. (15.2 cm)	7.0 in. (17.8 cm)
O.D.	6.0 in. (15.2 cm)	6.0 in. (15.2 cm)	6.5 in. (16.5 cm)	7.5 in. (19.1 cm)
Width	3.8 in. (9.7 cm)	4.0 in. (10.2 cm)	3.5 in. (8.9 cm)	5.0 in. (12.7 cm)
Weight	1.9 lbs (0.9 kg)	1.9 lbs (0.9 kg)	4.0 lbs (1.8 kg)	4.0 lbs (1.8 kg)

Specifications	015094070	015094075	015094076	015094077
I.D.	5.0 in. (12.7 cm)	4.0 in. (10.2 cm)	5.0 in. (12.7 cm)	7.0 in. (17.8 cm)
O.D.	5.5 in. (14.0 cm)	4.5 in. (11.4 cm)	5.5 in. (14.0 cm)	7.5 in. (19.1 cm)
Width	2.5 in. (6.4 cm)	3.5 in. (8.9 cm)	3.5 in. (8.9 cm)	3.5 in. (8.9 cm)
Weight	N/A	4.0 lbs (1.8 cm)	1.9 lbs (0.9 kg)	1.9 lbs (0.9 kg)

Specifications	015094078	015094079	015094095	015094097
I.D.	8.0 in. (20.3 cm)	9.0 in. (22.9 cm)	6.0 in. (15.2 cm)	4.0 in. (10.2 cm)
O.D.	8.5 in. (21.6 cm)	9.5 in. (24.1 cm)	6.5 in. (16.5 cm)	4.5 in. (11.4 cm)
Width	3.5 in. (8.9 cm)	3.5 in. (8.9 cm)	6.5 in. (16.5 cm)	3.0 in. (7.6 cm)
Weight	4.0 lbs (1.8 cm)	4.0 lbs (1.8 cm)	4.0 lbs (1.8 cm)	1.9 lbs (0.9 kg)

Questions? Contact Technical Support:
800 344 3286 or 209 521 7860 ext. 7555
e-mail: racortech@parker.com

Reducing Coupling with Fitting

Specifications	125291001	125291002	125291003	125291004
I.D.	7.0 in. (17.8 cm) 5.0 in. (12.7 cm)	7.0 in. (17.8 cm) 5.5 in. (14.0 cm)	7.0 in. (17.8 cm) 6.0 in. (15.2 cm)	6.0 in. (15.2 cm) 5.0 in. (12.7 cm)
O.D.	7.5 in. (19.1 cm) 5.5 in. (14.0 cm)	7.5 in. (19.1 cm) 6.0 in. (15.2 cm)	7.5 in. (19.1 cm) 6.5 in. (16.5 cm)	6.5 in. (16.5 cm) 5.5 in. (14.0 cm)
Width	7.0 in. (17.8 cm)	7.0 in. (17.8 cm)	6.0 in. (15.2 cm)	6.0 in. (15.2 cm)
Steel Plug	1/8” NPTF			
Weight	5.0 lbs (2.3 kg)	5.0 lbs (2.3 kg)	5.0 lbs (2.3 kg)	5.0 lbs (2.3 kg)

Air Accessories

Cobra Head Elbow

Specifications	401079067	401079068	401079074	401079093
I.D.	4.0 in. (10.2 cm) 2.8 in. (7.1 cm)	3.0 in. (7.6 cm) 3.0 in. (7.6 cm)	4.0 in. (10.2 cm) 5.0 in. (12.7 cm)	6.0 in. (15.2 cm) 5.0 in. (12.7 cm)
O.D.	4.5 in. (11.4 cm)	3.5 in. (8.9 cm) 3.5 in. (8.9 cm)	4.6 in. (11.7 cm) 5.6 in. (14.2 cm)	6.6 in. (16.8 cm) 5.6 in. (14.2 cm)
Height	N/A	7.3 in. (18.5 cm)	9.5 in. (24.1 cm)	15.8 in. (40.1 cm)
Weight	4.0 lbs (1.8 kg)	4.0 lbs (1.8 kg)	4.0 lbs (1.8 kg)	4.0 lbs (1.8 kg)

Specifications	401079069	401079071	401079087	401079083	401079090
I.D.	4.0 in. (10.2 cm) 4.0 in. (10.2 cm)	4.0 in. (10.2 cm) 4.0 in. (10.2 cm)	4.0 in. (10.2 cm) 4.0 in. (10.2 cm)	5.0 in. (12.7 cm) 4.0 in. (10.2 cm)	5.0 in. (12.7 cm) 4.0 in. (10.2 cm)
O.D.	4.5 in. (11.4 cm) 4.5 in. (11.4 cm)	4.5 in. (11.4 cm) 4.5 in. (11.4 cm)	4.5 in. (11.4 cm) 4.5 in. (11.4 cm)	5.5 in. (14.0 cm) 4.5 in. (11.4 cm)	5.5 in. (14.0 cm) 4.5 in. (11.4 cm)
Height	9.1 in. (23.1 cm)	9.1 in. (23.1 cm)	9.7 in. (24.6 cm)	9.7 in. (24.6 cm)	9.0 in. (22.9 cm)
Steel Plug	1/8” NPTF			No	No
Weight	N/A				

Questions? Contact Technical Support:
800 344 3286 or 209 521 7860 ext. 7555
e-mail: racortech@parker.com

Air Accessories

90° Elbow

Specifications	401403001	401403002	401403003	401403004
I.D.	3.5 in. (8.8 cm) 3.5 in. (8.8 cm)	4.0 in. (10.1 cm) 4.0 in. (10.1 cm)	5.5 in. (13.9 cm) 5.5 in. (13.9 cm)	7.0 in. (17.7 cm) 7.0 in. (17.7 cm)
O.D.	4.0 in. (10.2 cm) 4.0 in. (10.2 cm)	4.5 in. (11.4 cm) 4.5 in. (11.4 cm)	6.0 in. (15.2 cm) 6.0 in. (15.2 cm)	7.6 in. (19.3 cm) 7.6 in. (19.3 cm)
Height	6.9 in. (17.5 cm)	7.8 in. (19.8 cm)	8.8 in. (22.4 cm)	11.1 in. (28.2 cm)
Weight	1.7 lbs (0.8 kg)	2.2 lbs (1.0 kg)	3.9 lbs (1.8 kg)	5.0 lbs 2.3 kg)

Specifications	401403013	401403014	401403019	401403030
I.D.	5.0 in. (12.7 cm) 5.0 in. (12.7 cm)	6.0 in. (15.2 cm) 6.0 in. (15.2 cm)	8.0 in. (20.3 cm) 8.0 in. (20.3 cm)	2.0 in. (5.0 cm) 2.0 in. (5.0 cm)
O.D.	5.5 in. (13.9 cm) 5.5 in. (13.9 cm)	6.5 in. (16.5 cm) 6.5 in. (16.5 cm)	8.8 in. (22.4 cm) 8.8 in. (22.4 cm)	2.4 in. (6.1 cm) 2.4 in. (6.1 cm)
Height	8.6 in. (21.8 cm)	9.8 in. (24.9 cm)	12.5 in. (31.8 cm)	4.5 in. (11.4 cm)
Weight	3.5 lbs (1.6 kg)	1.5 lbs (0.7 kg)	9.0 lbs (4.1 kg)	1.7 lbs (0.8 kg)

Specifications	401403038	401403058	401403063	401403201	401403205
I.D.	3.0 in. (7.6 cm) 3.0 in. (7.6 cm)	2.5 in. (6.4 cm) 2.5 in. (6.4 cm)	10.0 in. (25.4 cm) 10.0 in. (25.4 cm)	4.5 in. (11.4 cm) 4.5 in. (11.4 cm)	6.0 in. (15.2 cm) 6.0 in. (15.2 cm)
O.D.	3.5 in. (8.9 cm) 3.5 in. (8.9 cm)	3.0 in. (7.6 cm) 3.0 in. (7.6 cm)	10.7 in. (27.2 cm) 10.7 in. (27.2 cm)	5.0 in. (12.7 cm) 5.0 in. (12.7 cm)	6.5 in. (16.5 cm) 6.5 in. (16.5 cm)
Height	6.8 in. (17.3 cm)	5.2 in. (13.2 cm)	15.5 in. (39.4 cm)	7.8 in. (19.8 cm)	8.0 in. (20.3 cm)
Weight	1.0 lbs (0.5 kg)	1.0 lbs (0.5 kg)	10.0 lbs (4.5 kg)	2.2 lbs (1.0 kg)	N/A

Air Accessories

90° Reducing Elbow

Specifications	401403025	401403029	401403033	401403035
I.D.	6.0 in. (15.2 cm) 5.5 in. (14.0 cm)	7.0 in. (17.8 cm) 5.5 in. (14.0 cm)	7.0 in. (17.8 cm) 5.0 in. (12.7 cm)	6.0 in. (15.2 cm) 5.0 in. (12.7 cm)
O.D.	6.5 in. (16.5 cm) 6.0 in. (15.2 cm)	7.6 in. (18.3 cm) 6.0 in. (15.2 cm)	7.5 in. (19.1 cm) 5.5 in. (14.0 cm)	6.5 in. (16.5 cm) 5.5 in. (14.0 cm)
Height	9.8 in. (24.9 cm)	9.3 in. (23.6 cm)	10.5 in. (26.7 cm)	10.0 in. (25.4 cm)
Weight	4.5 lbs (2.0 kg)	4.5 lbs (2.0 kg)	4.0 lbs (1.8 kg)	1.9 lbs (0.9 kg)

Specifications	401403041	401403044	401403056	401403057
I.D.	6.0 in. (15.2 cm) 5.0 in. (12.7 cm)	7.0 in. (17.8 cm) 6.0 in. (15.2 cm)	5.0 in. (12.7 cm) 4.0 in. (10.2 cm)	4.0 in. (10.2 cm) 3.0 in. (7.6 cm)
O.D.	6.5 in. (16.5 cm) 5.5 in. (14.0 cm)	7.8 in. (19.8 cm) 6.8 in. (17.3 cm)	5.5 in. (14.0 cm) 4.5 in. (11.4 cm)	4.4 in. (11.2 cm) 3.4 in. (8.6 cm)
Height	7.8 in. (19.8 cm)	11.1 in. (28.2 cm)	9.3 in. (23.6 cm)	5.6 in. (14.2 cm)
Weight	5.0 lbs (2.3 kg)	4.0 lbs (1.8 kg)	2.0 lbs (0.9 kg)	2.0 lbs (0.9 kg)

Specifications	401403066	401403091	401403092	401403098
I.D.	4.0 in. (10.2 cm) 3.5 in. (8.9 cm)	7.0 in (17.8 cm) 6.0 in. (15.2 cm)	8.0 in. (20.3 cm) 7.0 in. (17.8 cm)	4.0 in. (10.2 cm) 3.8 in. (9.7 cm)
O.D.	4.4 in. (11.2 cm) 3.9 in. (9.9 cm)	7.7 in. (19.6 cm) 6.7 in. (17.0 cm)	8.8 in. (22.4 cm) 7.8 in. (19.8 cm)	4.5 in. (11.4 cm) 4.3 in. (10.9 cm)
Height	6.5 in. (16.5 cm)	8.5 in. (21.6 cm)	12.5 in. (31.8 cm)	7.8 in. (19.8 cm)
Weight	4.5 lbs (2.0 kg)	5.0 lbs (2.3 kg)	1.9 lbs (0.9 kg)	1.9 lbs (0.9 kg)

Specifications	401403206	401403207	401403208	401403209	401403219
I.D.	6.0 in. (15.2 cm) 4.0 in. (10.2 cm)	6.0 in. (15.2 cm) 4.0 in. (10.2 cm)	6.0 in. (15.2 cm) 4.0 in. (10.2 cm)	6.0 in. (15.2 cm) 4.0 in. (10.2 cm)	3.0 in. (7.6 cm) 2.4 in. (6.1 cm)
O.D.	6.5 in. (16.5 cm) 4.5 in. (11.4 cm)	6.5 in. (16.5 cm) 4.5 in. (11.4 cm)	6.5 in. (16.5 cm) 4.5 in. (11.4 cm)	6.5 in. (16.5 cm) 4.5 in. (11.4 cm)	3.5 in. (8.9 cm) 2.9 in. (7.4 cm)
Height	9.3 in. (23.6 cm)	7.9 in. (20.1 cm)	7.9 in. (20.1 cm)	9.3 in. (23.6 cm)	4.5 in. (11.4 cm)
Weight	N/A				

Questions? Contact Technical Support:
800 344 3286 or 209 521 7860 ext. 7555
e-mail: racortech@parker.com

Air Accessories

45° Elbow

Specifications	401403005	401403006	401403007	401403008	401403015
I.D.	3.5 in. (8.9 cm)	4.0 in. (10.2 cm)	5.5 in. (14.0 cm)	7.0 in. (17.8 cm)	5.0 in. (12.7 cm)
O.D.	4.0 in. (10.2 cm)	4.5 in. (11.4 cm)	6.0 in. (15.2 cm)	7.6 in. (19.3 cm)	5.5 in. (14.0 cm)
Weight	1.7 lbs (0.8 kg)	2.2 lbs (1.0 kg)	1.7 lbs (0.8 kg)	3.0 lbs (1.4 kg)	3.5 lbs (1.6 kg)

Specifications	401403016	401403020	401403059	401403202	401403212
I.D.	6.0 in. (15.2 cm)	8.0 in. (20.3 cm)	3.0 in. (7.6 cm)	10.0 in. (25.4 cm)	4.5 in. (11.4 cm)
O.D.	6.5 in. (16.5 cm)	8.8 in. (22.4 cm)	3.5 in. (8.9 cm)	10.6 in. (26.9 cm)	5.0 in. (12.7 cm)
Weight	2.2 lbs (1.0 kg)	9.0 lbs (4.1 kg)	1.0 lbs (0.5 kg)	9.0 lbs (4.1 kg)	1.7 lbs (0.8 kg)

45° Reducing Elbow

Specifications	401403043	401403203	401403213
I.D.	7.0 in. (17.8 cm) 6.0 in. (15.2 cm)	6.0 in. (15.2 cm) 5.0 in. (12.7 cm)	6.0 in. (15.2 cm) 5.5 in. (14.0 cm)
O.D.	7.6 in. (19.3 cm) 6.6 in. (16.8 cm)	6.5 in. (16.5 cm) 5.5 in. (14.0 cm)	6.5 in. (16.5 cm) 6.0 in. (15.2 cm)

Air Accessories

22° Elbow

Specifications	401403034	401403210	401403214
I.D.	5.5 in. (14.0 cm)	6.0 in. (15.2 cm)	4.0 in. (10.2 cm)
O.D.	6.0 in. (15.2 cm)	6.5 in. (16.5 cm)	4.5 in. (11.4 cm)

38° Elbow

Specifications	401403204
I.D.	6.0 in. (15.2 cm)
O.D.	6.5 in. (16.5 cm)

54° Elbow

Specifications	401403216	401403217
I.D.	5.5 in. (14.0 cm)	6.0 in. (15.2 cm)
O.D.	6.0 in. (15.2 cm)	6.5 in. (16.5 cm)

Air Accessories

63° Elbow

Specifications	401403220
I.D.	8.0 in. (20.3 cm)
O.D.	8.8 in. (22.4 cm)

68° Elbow

Specifications	401403211	401403215	401403218
I.D.	5.5 in. (14.0 cm)	4.5 in. (11.4 cm)	6.0 in. (15.2 cm)
O.D.	6.0 in. (15.2 cm)	5.0 in. (12.7 cm)	6.5 in. (16.5 cm)

68° Reducing Elbow

Specifications	401403055
I.D.	7.0 in. (17.8 cm) 6.0 in. (15.2 cm)
O.D.	7.5 in. (19.1 cm) 6.5 in. (16.5 cm)

Part Number Index

0

PRODUCT	PAGE#
004690002	F103
004690003	F103
004690005	F103
004690006	F103
004690007	F103
004690008	F103
004690009	F103
004690010	F103
004690011	F103
004690012	F103
004690013	F103
004690014	F103
004690015	F103
004690017	F103
004690018	F103
004690019	F103
012233001	F80
012233002	F80
012233003	F80
012233004	F80
012233005	F80
012233006	F80
012233007	F80
012233008	F80
012233009	F80
012233010	F80
012233011	F80
012233012	F80
012233014	F80
012233017	F80
012233018	F80
012233019	F80
014439000	F105
014440001	F105
015094009	F108
015094010	F108
015094011	F108
015094012	F108
015094017	F108
015094018	F108
015094021	F108
015094022	F109
015094023	F109
015094024	F109
015094026	F109
015094027	F109
015094031	F109
015094032	F109
015094036	F111
015094037	F109
015094039	F108
015094040	F108
015094043	F111
015094045	F110
015094046	F108
015094047	F112
015094048	F112
015094049	F112
015094050	F112
015094051	F112
015094052	F112
015094053	F112
015094054	F112
015094060	F110
015094061	F110
015094062	F110
015094064	F111
015094065	F110
015094070	F112
015094072	F111
015094073	F110
015094075	F112
015094076	F112

Questions? Contact Technical Support:
800 344 3286 or 209 521 7860 ext. 7555
e-mail: racortech@parker.com

015094077	F112
015094078	F112
015094079	F112
015094080	F111
015094081	F111
015094082	F111
015094086	F110
015094089	F111
015094092	F110
015094094	F111
015094095	F112
015094096	F111
015094097	F112
015094102	F111
015094103	F111
015094104	F111
015094105	F110
015094106	F110
015094111	F110
015094113	F110
015094114	F110
015094115	F110
015094116	F108
015094117	F108
015382500	F84
015382508	F84
015382600	F84
016411000	F89
024811001	F82
024811002	F82
024811003	F82
035588000	F93
035589001	F83
035589008	F83
035589010	F83
035589011	F83
035589012	F83
035589013	F83
038105007	F93
039135001	F105
041199001	F85
041199002	F85

041199003	F85
041199004	F85
041199005	F85
041199006	F85
041199007	F85
041199807	F85
042067000	F82
042160000	F82
042586000	F82
043910203	F93
044430001	F78
045800000	F89
048976000	F89
049261000	F89
049470001	F90
049470002	F90
049470003	F90
049470004	F90
049471001	F90
049471002	F90
049471003	F90
049471004	F90
049780000	F93
049812000	F89
049890001	F93
049890003	F93
049891000	F93
050073000	F93
050727000	F93
051793001	F90
051799000	F93
051800000	F89
051884001	F93
051884002	F93
051884003	F93
052711000	F89
056519002	F83
056519003	F83
056519004	F83
056519005	F83
056519010	F83
056519011	F83

0 continued

PRODUCT	PAGE#
056519016	F83
058447000	F86, F87
059590001	F93
059599002	F93
059599003	F93
059709000	F78
059711000	F78
059713000	F78
059714000	F76
059716000	F76
059718000	F76
060039000	F86, F87
060040000	F88
060095001	F91
060095002	F91
060096001	F92
060096002	F92
060144000	F88
060146000	F88
060147000	F88
060236000	F89
060237000	F89
060238000	F89
060392001	F83
060393001	F83
060394001	F83
060394002	F83
060395001	F83
060395002	F83
060396001	F83
060396002	F83
060450022	F82
060450023	F82
060450026	F82
060450027	F82
060450028	F82
060450029	F82
060450030	F82
060799000	F89
060876000	F91
061194000	F81
061195000	F81
061334001	F91
061334002	F91
061335001	F92
061335002	F92
061336001	F92
061336002	F92
062701003	F78
062701004	F78
062701010	F78
062701012	F79
062701013	F79
062701014	F79
062701015	F79
062701016	F79
062702001	F79
062702002	F79
062702003	F79
062703010	F79
062705001	F75
062705002	F75
062705008	F75
062705010	F76
062705011	F76
062705012	F76
062705013	F76
062713003	F77
062713007	F77
062713009	F77
062713011	F77
062713013	F77
062891001	F56
062981002	F56
062981003	F56
062981004	F56
062981007	F56
062981010	F56
066386002	F86, F87
066386003	F87
066386005	F88

Questions? Contact Technical Support:
800 344 3286 or 209 521 7860 ext. 7555
e-mail: racortech@parker.com

066386006	F88
066386008	F88
066386009	F88
066401002	F86, F87
066401003	F87
066401005	F88
066401006	F88
066417002	F87
066417003	F87
066417005	F88
066417006	F88
066417008	F88
066417009	F88
066430002	F87
066430003	F87
066430005	F88
066430006	F88
066430008	F88
066430009	F88
067872000	F77
067874000	F77
067876000	F77
070025004	F85
071338001	F48
071338002	F48
071338004	F48
071338005	F48
071338007	F48
071338008	F48
071338009	F48
071338010	F48
071338013	F48, F51
071656001	F49
071656002	F49
071921001	F104
071921002	F104
071921003	F104
071921004	F104
071921006	F104
072604000	F105
072994000	F49
072995002	F50
076248001	F105
078950000	F59
084404000	F73
094973001	F57
094973002	F57
094973003	F57
094973004	F57
094973005	F57
094973006	F57
094973007	F57
099049001	F104
099049002	F104
099049003	F104
099842002	F65
099842004	F65
099842005	F66
099842006	F66
099842007	F66
099842008	F66
099842009	F66
099842010	F66
099930001	F90
099930002	F90
099930003	F90

1

PRODUCT	PAGE#
111657004	F102
111657006	F102
111657008	F102
111657009	F102
111657010	F102
111657011	F102
111657012	F102
111657013	F102
111657014	F102
111657015	F102
111657016	F102
111810001	F106
111810002	F106
111810003	F106
114088001	F106

F

1 continued

PRODUCT	PAGE#
114088002	F106
114088003	F106
114500001	F64
114500002	F64
114500003	F64
114880003	F64
114880005	F64
117122000	F64
123583440	F71, F72
123583550	F71, F72
123583660	F71, F72
123583665	F71, F72
123583770	F71, F72
123583990	F71, F72
123970001	F68
123970002	F68
123970003	F68
123970004	F68
123970005	F68
123970006	F68
123970007	F68
123970008	F68
123970009	F68
123970010	F68
123970011	F68
123970012	F68
123970013	F69
123970014	F69
123970015	F69
123970016	F69
123970017	F69
123970018	F69
123970019	F69
123970020	F69
123970021	F69
123970022	F69
123970023	F69
123970024	F69
125154005	F73
125254013	F73
125291001	F113
125291002	F113
125291003	F113
125291004	F113

4

PRODUCT	PAGE#
400033015	F105
400033020	F105
400033025	F105
400034000	F105
400135000	F59
400292000	F64
400431000	F59
400458001	F58
400458002	F58
400460001	F58
400460002	F58
400461001	F59
400461002	F59
400462001	F58
400462002	F58
400463001	F59
400463002	F59
400470002	F63
400820001	F60
400820002	F60
400820003	F60
400820004	F60
400820005	F61
400820006	F61
400820007	F61
400820008	F61
400820009	F61
400820010	F61
400820012	F61
400820014	F61
400820015	F62
400820019	F62
400820020	F62
400820021	F62

400820022	F62
400820023	F62
401079067	F114
401079068	F114
401079069	F114
401079071	F114
401079074	F114
401079083	F114
401079087	F114
401079090	F114
401079093	F114
401403001	F115
401403002	F115
401403003	F115
401403004	F115
401403005	F117
401403006	F117
401403007	F117
401403008	F117
401403013	F115
401403014	F115
401403015	F117
401403016	F117
401403019	F115
401403020	F117
401403025	F116
401403029	F116
401403030	F115
401403033	F116
401403034	F118
401403035	F116
401403038	F115
401403041	F116
401403043	F117
401403044	F116
401403055	F119
401403056	F116
401403057	F116
401403058	F115
401403059	F117
401403063	F115
401403066	F116
401403091	F116
401403092	F116
401403098	F116
401403201	F115
401403202	F117
401403203	F117
401403204	F118
401403205	F115
401403206	F116
401403207	F116
401403208	F116
401403209	F116
401403210	F118
401403211	F119
401403212	F117
401403213	F117
401403214	F118
401403215	F119
401403216	F118
401403217	F118
401403218	F119
401403219	F116
401403220	F119

5

PRODUCT	PAGE#
500155002	F58
500157001	F59
500157002	F59
500158001	F59
500187012	F54
500192012	F54
500198020	F105
500198025	F105
500229000	F54
500233000	F54
500247012	F54
500250012	F53, F54
58488-010	F67

F

9

PRODUCT	PAGE#
93530-001	F67

A

PRODUCT	PAGE#
AF M408512	F26
AF M501012	F26
AF M601212	F26
AF M8010	F96
AF M8021	F96
AF M8025	F96
AF M8026	F96
AF M8033	F96
AF M8034	F96
AF M8037	F96
AF M8047	F96
AFAP083	F9, F11
AFAP183	F9
AFAP184	F9
AFAP400	F9, F11
AFAP401	F9
AFAP414	F9, F11
AFAP415	F9
AFAP500	F9
AFAP501	F10
AFAP818	F10
AFAP819	F10
AFAP820	F10
AFAP919	F10
AFAP920	F10
AFC1000	F39
AFC1001	F39
AFC2000	F39
AFC2001	F39
AFCS021	F13, F15
AFCS031	F13, F15
AFCS051	F3, F13, F15
AFCS071	F3, F13, F15
AFCS081	F3, F13, F15
AFCS121	F3, F13, F15
AFCS181	F3, F13, F15
AFCS221	F3, F13, F15
AFCS251	F3, F14, F15
AFCS261	F3, F14, F15
AFCS311	F14, F15
AFCS351	F14, F15
AFCS431	F14, F15
AFHP111	F23
AFHP112	F23
AFHP21	F22
AFHP211	F23
AFHP212	F23
AFHP31	F22
AFHP41	F22
AFHP411	F23
AFHP412	F23
AFHP42	F22
AFHP81	F22
AFHP82	F22
AFHP83	F22
AFHP91	F22
AFHP92	F22
AFM82006	F101
AFSF12	F31, F32, F33
AFSF15	F31, F32, F33
AFSF18	F31, F32, F33
AFSF20	F31, F32, F33
AFSF21	F31, F32, F33
AFSF310	F31, F32, F33
AFSF350	F31, F32, F33
AFSF4	F31, F32, F33
AFSF430	F31, F32, F33
AFSF6	F31, F32, F33
AFSF8	F31, F32, F33
AFTFP2056	F95
AFTFP2062-1	F95
AFTRD1023	F95
AFTRD1460	F95
AFTRD1690	F95
AFTRD1946	F95
AFUP006	F6
AFUP006E	F6

AFUP007	F6
AFUP007E	F6
AFUP021	F6
AFUP021E	F6
AFUP041	F7
AFUP041E	F7
AFUP061	F7
AFUP061E	F7
AFUP091	F7
AFUP091E	F7
AFUP131	F7
AR2201	F17, F35
AR234401	F18, F36
AR246501	F17, F35
AR6060	F18, F36
AR6067	F18, F36
AR6122	F18, F36
AR6144	F18, F36
AR6154	F17, F35
AR6277	F17, F35
AR6321	F36
AR6322	F18
AR6324	F17, F35
AS2207	F19, F37
AS6121	F19, F37
AS6123	F19, F37
AS6159	F19, F37
AS6180	F19, F37
AS6182	F20,
AS6182	F20,
AS6220	F38
AS6221	F20, F38
AS6316	F20, F38
AS6320	F20, F38
AS6323	F20, F38

D

PRODUCT	PAGE#
DR-6	F100
DU-3	F100
DU-4	F100
DU-5	F100

E

PRODUCT	PAGE#
EACP61508	F41
EACP61511	F41
EACP61513	F41
EACP61515	F41
EACP61517	F41
EACP61519	F41
EACP61521	F41
EACP61523	F41
EAF68110	F42, F43
EAF68111	F42, F43
EAF68120	F42, F43
EAF68130	F42, F43
EAF68132	F42, F43
EAF68133	F42, F43
EAF68140	F42, F43
EAF68150	F42, F43
EAF68160	F42, F43
EAF68170	F42, F43
EAF68175	F42, F43
EAF68175-1	F42, F43
EAF68178	F42, F43
EAF68179	F42, F43
EAF68182	F42, F43
EAF68185	F42, F43
EAVLR68189-2	F44, F45
EAVLR68190	F44, F45
EAVLR68191	F44, F45
EAVLR68193	F44, F45
EAVLR68193-2	F44, F45
EAVLR68193S	F44, F45
EAVLR68193S2	F44, F45
EAVLR68194	F44, F45
EAVLR68195	F44, F45
EAVLR68195-1	F44, F45
EAVLR68195S1	F44, F45
EAVLR68196-3	F44, F45
EAVLR68197	F44, F45
EAVLR68197-2	F44, F45
EAVLR68197S	F44, F45

E continued

PRODUCT	PAGE#
EAVLR68197S2	F44, F45
EAVLR68198	F44, F45
EAVLR68198-1	F44, F45
EAVLR68199S	F44, F45

Z

PRODUCT	PAGE#
X-65	F100

Questions? Contact Technical Support:
800 344 3286 or 209 521 7860 ext. 7555
e-mail: racortech@parker.com

Section: G
Crankcase Filtration

aerospace
climate control
electromechanical
filtration
fluid & gas handling
hydraulics
pneumatics
process control
sealing & shielding

Parker Racor

ENGINEERING YOUR SUCCESS.

Table of Contents

Open Crankcase Ventilation (CV) G1
Overview G1
Specifications G2
Dimensions G3
How to Order and System Flow G4
Hose and Fittings Kits G5
Accessories G6
CV4501 Replacement Parts G8
CV6001 Replacement Parts G8
CV8001 Replacement Parts G8
CV12001 Replacement Parts G8
Closed Crankcase Ventilation (CCV) G9
CCV History G9
Overview G10
Features and Benefits G11
How To Order G12
CCV Assemblies G13
Specifications G15
Dimensions G16
Hose and Fitting Kits G17
Marine Air Filter Assemblies G18
Heater Kits G18
Tap Sleeves G18
CCV1500 Replacement Parts G19
CCV3500 Replacement Parts G19
CCV4500 Replacement Parts G20
CCV6000 Replacement Parts G21
CCV8000 Replacement Parts G22
CCV12000 Replacement Parts G23
Discontinued Assemblies G24
Part Number Index G25

Open Crankcase Ventilation (CV)

CV systems include a crankcase pressure regulator with integral bypass valve that minimizes variation in crankcase pressure. Excessive variation in crankcase pressure can damage seals, cause loss of oil, and other problems.

Choose left or right-hand inlet.

High-efficiency oil separation to 0.3 micron.

Stainless steel latches for tool-less filter change.

Replaceable high-performance filter with depth-loading, micro-glass fiber coalescing media.

Extended filter service interval from the Vaporbloc™ element.

Steel housing with epoxy powder coating.

Drain check valve allows collected oil to return to crankcase. This eliminates frequent draining and significantly reduces oil consumption.

Continuous operating temperature range is -40°F to +240°F (-40°C to 116°C).

In an open system, the crankcase breather is connected to the Crankcase Ventilation (CV) filter assembly. The CV outlet is open to atmosphere. This configuration is simple to install and is an effective oil mist removal system for applications which allow crankcase venting to atmosphere. There may be some visible blow-by gases present from the CV outlet.

The only routine maintenance required for the CV system is filter replacement. Typical service life of the high-performance filter in diesel applications is 750 hours. Variations in service life occur depending on load profile, engine wear condition, flow and aerosol mass concentration of crankcase emissions, and soot concentration.

CV units are designed to handle various crankcase flow rates up to 50 CFM. Traditionally, the crankcase flow rate can be calculated as follows: rated horsepower ÷ 20 = cubic feet per minute (CFM). This formula can only be used as a guide. The blow-by flow rate of a worn engine, at time of overhaul, is generally double the flow rate when the engine is new. The flow rate of a worn engine is factored into the formula. Note: Specify left or right-hand inlet when ordering.

Questions? Contact Technical Support:
800 344 3286 or 209 521 7860 ext. 7555
e-mail: racortech@parker.com

CV Specifications

	CV4501	CV6001	CV8001	CV12001
Max. Engine Rating	400 HP (298 KW)	800 HP (597 KW)	1600 HP (1193 KW)	2000 HP (1491 KW)
Max. Flow Rate	10 CFM (283 LM)	20 CFM (566 LM)	40 CFM (1133 LM)	50 CFM (1416 LM)
Inlet/Outlet Port Size	1 3/16”-12 STOR	1 5/8”-12 STOR	1 7/8”-12 STOR	1 7/8”-12 STOR
Weight	3.3 lbs (1.5 kg)	5.0 lbs (2.3 kg)	8.7 lbs (3.9 kg)	9.3 lbs (4.2 kg)
High Density Filter Replacement	CCV55248-08	CCV55274-08	CCV55222-08	CCV55222-12-08
Pressure Regulator	Integral	Integral	Integral	Integral
Check Valve Return Fitting	1/4” NPT	1/4” NPT	1/4” NPT	3/8” NPT
Swivel Fitting (Qty.)	#6 JIC (2 pcs.)	#6 JIC (2 pcs.)	#8 JIC (2 pcs.)	#8 JIC (2 pcs.)
Oil Drain Hose I.D.	0.375 in. (0.95 cm)	0.375 in. (0.95 cm)	0.5 in. (1.27 cm)	0.5 in. (1.27 cm)

***Units can be manifolded to handle higher flow rates.*

Questions? Contact Technical Support:
800 344 3286 or 209 521 7860 ext. 7555
e-mail: racortech@parker.com

CV Dimensions

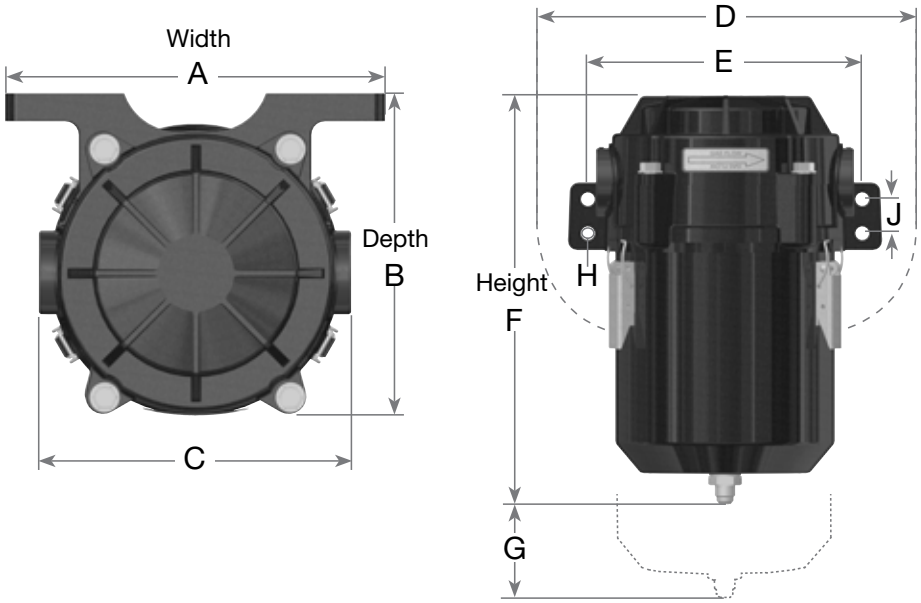

	4501 Series		6001 Series		8001 Series		12001 Series	
Dimension	IN	CM	IN	CM	IN	CM	IN	CM
A	7.2	18.3	8.6	21.8	10.6	26.9	10.6	26.9
B	5.6	14.2	7.3	18.5	9.3	23.6	9.3	23.6
C	5.6	14.2	7.1	18.0	9.1	23.1	9.1	23.1
D	7.5	19.1	11.3	28.7	13.3	33.8	13.3	33.8
E	6.0	15.2	7.5	19.1	9.5	24.1	9.5	24.1
F	8.6	21.8	11.3	28.7	13.2	33.5	17.3	43.9
G[1]	2.3	5.7	4.0	10.1	5.0	12.7	6.0	15.2
H	0.43	1.09	0.37	0.94	0.43	1.09	0.43	1.09
J[2]	N/A	N/A	0.93	2.4	1.06	2.7	1.06	2.7

[1] Dimension "G" is the minimum filter removal clearance - allow more room if possible for ease of service.
[2] Dimension "J" is not applicable on CV4501 assemblies because there are only two (2) mounting holes. All other units have four (4) mounting holes.

How To Order CV Systems

(The diagram below illustrates how part numbers are constructed)

C V X X D B - Y Y Z

"XX" Unit Size
45 = 10 CFM max
60 = 20 CFM max
80 = 40 CFM max
120 = 50 CFM max

"D" Duty Cycle
0 = Continuous Operation

"B" Bypass
1 = No internal bypass

"YY" Media
-08 = High efficency

"Z" Inlet Orientation
L = Left side
R = Right side

Example: CV4501-08L

CV System Flow

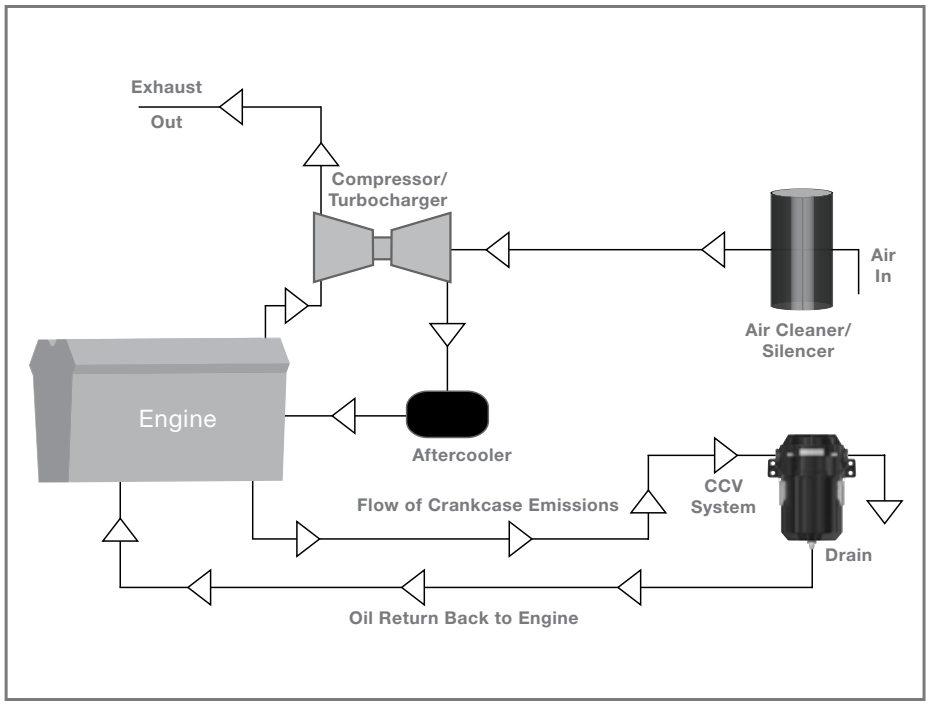

Questions? Contact Technical Support:
800 344 3286 or 209 521 7860 ext. 7555
e-mail: racortech@parker.com

CV Hose and Fitting Kits

CV4501 Series Assemblies

Part No.	Description
CCV55024	(1) ¾” fitting, (1) 1” fitting, (1) ¾” ID x 4 foot long hose, (1) 1” ID x 4 foot long hose, (4) clamps and (4) ties
CCV55025	(2) 1” fittings, (1) 1” ID x 8 foot long hose, (4) clamps and (4) ties
CCV55037	(1) 1-¼” fitting, (1) 1” fitting, (1) 1-¼” ID x 4 foot long hose, (1) 1” ID x 4 foot long hose, (4) clamps and (4) ties
CCV55038	(1) ¾” fitting, (1) 1” fitting, (1) ¾” ID x 6 foot long hose, (1) ¾” Tee fitting, (1) 1” ID x 4 foot long hose, (8) clamps and (8) ties

CV6001 Series Assemblies

Part No.	Description
CCV55046	(2) 1-¼” fittings, (1) 1-¼” ID x 8 foot long hose, (4) clamps and (4) ties
CCV55047	(2) 1-¼” fittings, (1) 1-¼” Tee fitting, (1) 1-¼” ID x 10 foot long hose, (8) clamps and (8) ties
CCV55048	(2) 1-¼” fittings, (1) 1-½” ID x 4 foot long hose, (1) bushing reducer, (1) 1-¼” ID x 4 foot long hose, (4) clamps and (4) ties
CCV55049	(2) 1-¼” fittings, (1) 1-½” ID x 5 foot long hose w/2” cuff, (1) bushing reducer, (1) 1-¼” ID x 4 foot long hose, (4) clamps and (4) ties

CV8001 and CV12001 Series Assemblies

Part No.	Description
CCV55067	(2) 1-½” fittings, (1) 1-½” ID x 10 foot long hose, (1) bushing reducer, (4) clamps and (4) ties
CCV55068	(2) 1-½” fittings, (1) 1-½” Tee fitting , (1) 1-½” ID x 12 foot long hose, (2) bushing reducers, (8) clamps and (8) ties
CCV55069	(2) 1-½” fittings, (1) 1-½” ID x 5 foot long hose w/2” cuff, (1) bushing reducer, (1) 1-½” ID x 5 foot long hose, (4) clamps and (4) ties

Hose and fitting kits include inlet and outlet fittings and enough hose for a typical installation of a CV assembly. CV assemblies require special fittings only available from Racor. Hose and fitting kits are available in various sizes and configurations.

Bulk Drain Hose

Part No.	Push-Lok Hose Size
CCV836-6-25	3/8 I.D., 25’ Roll
CCV836-6-50	3/8 I.D., 50’ Roll
CCV836-8-25	1/2 I.D., 25’ Roll
CCV836-8-50	1/2 I.D., 50’ Roll

Inlet/Outlet Hose

(available by the foot)

Part No.	Corrugated Hose Size (I.D.)
CV1034-01	3/4”
CV1100-01	1”
CV1114-01	1 1/4”
CV1112-01	1 1/2”

Hump Hose Fittings

These are designed to be used with existing air cleaner to turbo rubber adapters.

Part No.	Hose
CCV55540	0.75”
CCV55113	1.0”
CCV55114	1.25”
CCV55115	1.5”

G

CV Accessories

Electronic Remote Filter Gauge

The CCV55615-01 Lightbox Kit is designed to inform the user that the filter being monitored has become restricted.

During normal vehicle operation, the green light stays illuminated indicating the filter is performing properly. The red light iluminates when the filter becomes restricted and stays on until the engine is shut down. The light box is reset when the engine is shut down and the red light will not illuminate until filter restriction is again seen in the system.

Product Features:

- **Constant monitoring of filter condition while engine is on**
- **12Vdc operating supply voltage**
- **Operating temperature: -40°F to +257°F (-40°C to +125°C)**
- **5 amp max current draw**
- **Filter switch threads are 3/8”-24 straight thread**
- **Rugged construction**
- **Filter switch closure at 8 inches of water**
- **Green and red light illumination to show filter condition**

Remote Filter Gauge

Part Number: CCV55012

This Filter Minder was designed to inform the user that the filter being monitored has become restricted.

Included in Kit: Gauge & Bracket (Shown), 1/8”-27 NPT Fitting with Internal 40 micron filter and 10 FT of 1/4” OD EPDM hose.

Heavy-Duty Wear Spacers

These Heavy-Duty Spacers are an optional accessory for engine applications/installations that have excessive vibration. Excessive vibration causes abnormal wear on the CV/CCV assembly and could compromise integrity. The spacer is placed in the CV/CCV canister, below the filter, protecting the assembly from vibration and wear by cradling the filter.

CCV Unit	Spacer Number
CCV4500	CCV55390
CCV6000	CCV55385
CCV8000	CCV55374
CCV12000	CCV55374

Questions? Contact Technical Support:
800 344 3286 or 209 521 7860 ext. 7555
e-mail: racortech@parker.com

Inlet/Outlet

Hose Barbs

CV Assembly	Hose Barb Part No.	Size
CV4501	CCV55251	0.75”
CV4501	CCV55250	1”
CV4501	CCV55280	1.25”
CV6001	CCV55089	0.75”
CV6001	CCV55268	1.25”
CV6001	CCV55121	1.25” (90°)
CV6001	CCV55267	1.5”
CV8001/CV12001	CCV55218	1.5”

90° Hose Adapters

Part No.	CCV55121
Use with Model	CV6001
Hose Size	1-1/4” I.D.

Part No.	CCV55547-02
Use with Model	CV4501

Part No.	CCV55547-10
Use with Model	CV8001

CV Conversion Kit
Part Number:
CCV55613-08 (High Density)
CCV55613-10 (Ultra Density)

The CCV55613-08 and CCV55613-10 allow the CV8001 to be converted to a CV12001. The CV12001 series offers 60% additional media. The CV12001 series is great for applications where extra capacity is desired and immediate engine accessibility is not available. It allows for increased efficiency and longer service intervals. Kit includes element, wear spacer, o-rings, and CV12001 bowl.

G

CV4501 Replacement Parts

Part No.		Description
1.	CCV55248-04 CCV55248-08 CCV55248-10	Replacement Filter - Low Density Replacement Filter - High Density Replacement Filter - Ultra Density *(All filters include B and C)*
2.	CCV55080	3/8” MNPT Drain/Check Valve Kit

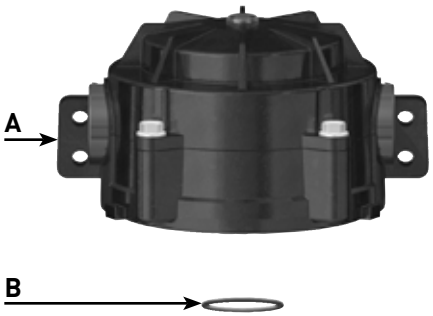

CV6001 Replacement Parts

Part No.		Description
1.	CCV55274-08 CCV55274-10	Replacement Filter - High Density Replacement Filter - Ultra Density *(All filters include B and C)*
2.	CCV55279	3/8” MNPT Drain/Check Valve Kit

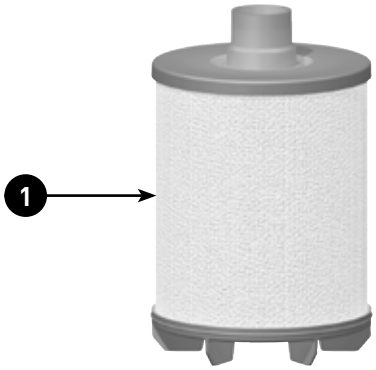

CV8001 Replacement Parts

Part No.		Description
1.	CCV55222-08 CCV55222-10	Replacement Filter - High Density Replacement Filter - Ultra Density *(All filters include B and C)*
2.	CCV55080	3/8” MNPT Drain/Check Valve Kit

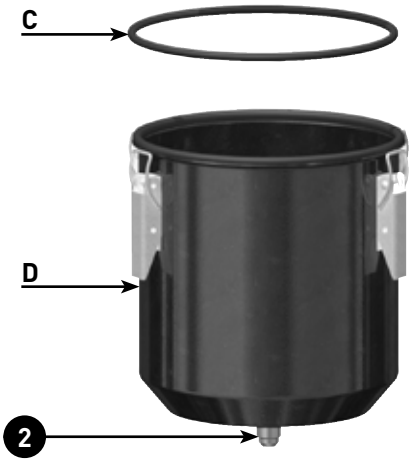

(CV6001 Shown)

CV12001 Replacement Parts

Part No.		Description
1.	CCV55222-12-08 CCV55222-12-10	Replacement Filter - High Density Replacement Filter - Ultra Density *(All filters include B and C)*
2.	CCV55080	3/8” MNPT Drain/Check Valve Kit

Questions? Contact Technical Support:
800 344 3286 or 209 521 7860 ext. 7555
e-mail: racortech@parker.com

Closed Crankcase Ventilation (CCV)

How They Work

CCV systems integrate three distinct functions:

First is to provide coalescing and separation of oil mist particles, soot, and liquid volatiles created during combustion process. CCV systems employ a depth loading media that has a very low pressure drop through the filter, but increases the ability to coalesce particles out of the blow-by gas. With this, we are able to achieve very high efficiencies and maintain crankcase pressure between -4 to +4 inches of water on closed systems.

Second is to provide a sump chamber and check valve which returns coalesced liquid oil back to the crankcase. Depending on amount of carryover created by engine, significant amounts of oil will be saved and returned to the crankcase. This lowers the overall maintenance cost of the engine, and protects the environment from contamination.

Third is the pressure regulation valve. It balances pressure in the crankcase, protecting it from high vacuum created by a dirty air filter and today's high mass flow turbocharger compressors. Our pressure regulation valves monitor crankcase pressure ensuring that it maintains a range of -4 to +4 inches of water. These pressures are maintained throughout the operational life of the filter. On standard units, an integrated internal bypass feature is an option with our valve. The valve also creates a pre-separation impactor surface when operating, which processes large droplet sizes above 10 micron. The valve system relies on ambient external pressure to regulate blow-by gasses and does not require introduction of outside air into the CCV system.

All of these components are combined into one robust package. Racor CCV filters provide diesel engine users a "systems" solution to eliminate blow-by emissions.

Racor CCV History

Beginning with a successful partnership of technology, filtration expertise, and customer focus, Racor released the first integrated CCV system for the diesel engine industry in 1997. The Racor CCV4500 was the first of four CCV units that marry several subcomponents:

- **A pressure regulator**
- **Filter element,**
- **Impactor/pre-separator in the pressure regulator**
- **Optional bypass in the regulation valve**
- **Filter change indicator**
- **Drain to a remote mounted anti-suction check valve**
- **Inlet and outlet ports with variable size options**

G

CCV

Market Challenges and Overview

The Problem – Engines Releasing Pollutants Through Unfiltered Breathers

Environmental concerns and legislation to control crankcase emissions have increased significantly. To further reduce the total emissions of engines, in some applications it is becoming necessary to close the crankcase breather system, routing these gases into the air intake system.

Crankcase blow-by is produced when combustion gases under high pressure are blown passed the piston rings into the crankcase. As these blow-by gases pass though the crankcase, they become contaminated. Racor's Crankcase Ventilation System removes these contaminations. The exhaust can then be allowed to vent to the atmosphere.

For applications requiring more stringent emissions requirements, a closed crankcase filter is recommended. In this application, the exhaust from the crankcase filter is routed to the inlet side of the turbo. A regulator in the crankcase filter controls the vacuum in the crankcase to ensure proper operation.

CCV4500 installed on a CAT engine.

- **In closed environments like generator sets and marine engine rooms, damage to surrounding equipment such as radiators and electronic control panels can cause hazardous conditions, down time, and expensive maintenance.**
- **Oil mist will coat and contaminate the aftercooler and other engine components. This coating reduces engine cooling capacity, causes a degradation of engine performance and reliability over time, and shortens the useful service life of the engine components.**
- **The engine intake inhales contaminated gasses, clogging air filter systems, and damaging turbocharger components. It is imperative that oil mist be removed from the crankcase emissions prior to introduction into the engine air intake in closed breather systems.**

Questions? Contact Technical Support:
800 344 3286 or 209 521 7860 ext. 7555
e-mail: racortech@parker.com

Features and Benefits

Unique crankcase pressure regulator with integral bypass valve minimizes variation in crankcase pressure. Excessive variation in crankcase pressure can damage seals, cause loss of oil, and other problems.

Pop-up style indicator alerts of bypass condition and need for filter change.

Choose left or right-hand inlet. Available with or without bypass indicator

High-efficiency oil separation to 0.3 micron.

Stainless steel latches for tool-less element change.

Replaceable high-performance filter with depth-loading, micro-glass fiber coalescing media.

Extended filter service interval from the Vaporbloc™ element.

Steel housing with epoxy powder coating.

Drain check valve allows collected oil to return to crankcase. This eliminates frequent draining and significantly reduces oil consumption.

Continuous operating temperature range is -40°F to +240°F (-40°C to 116°C).

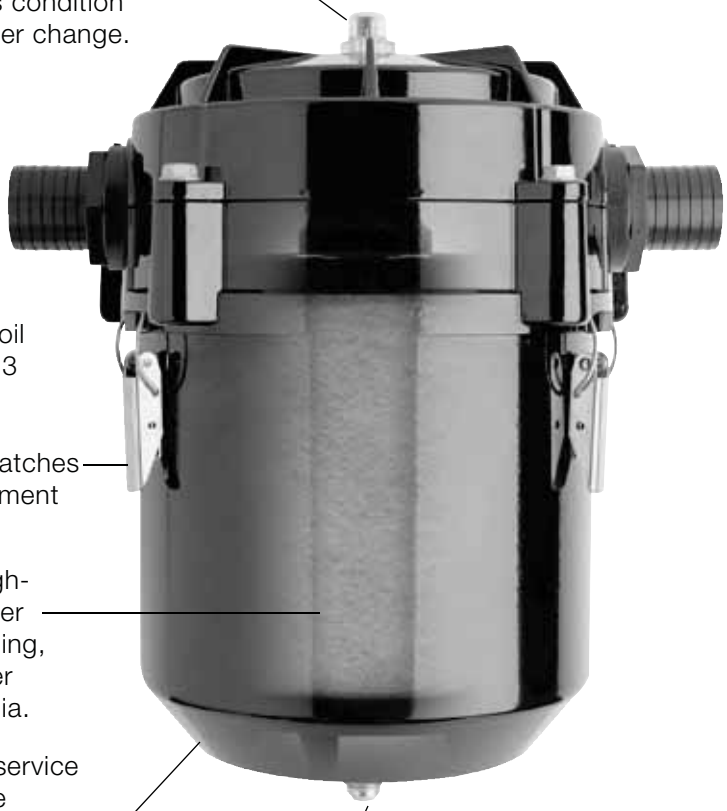

In a robust, compact package, the patented Racor Closed Crankcase Ventilation (CCV)Filter System provides superior oil coalescence and crankcase pressure control under the most severe conditions.

The only routine maintenance required for the CCV system is filter replacement. Typical service life of the high-performance filter in diesel applications is 750 hours. Some variations in service life occur depending on load profile, engine wear condition, flow and aerosol mass concentration of crankcase emissions, and soot concentration.

Selecting A CCV Assembly:

CCV systems are designed to handle various crankcase flow rates up to 50 CFM. Traditionally, the crankcase flow rate can be calculated as follows: rated horsepower ÷ 40 = cubic feet per minute (CFM). This formula can only be used as a guide. The blow-by flow rate of a worn engine, at time of overhaul, is generally double the flow rate when the engine is new. The flow rate of a worn engine is factored into the formula. Note: Specify left or right-hand inlet when ordering.

Example:
CAT 3116: 260 HP/40 = 6.5 CFM
Select CCV4500

G

How To Order CCV Systems

C C V X X D B - Y Y Z

"XX" Unit Size
15 = 1 CFM max
35 = 3 CFM max
45 = 10 CFM max
60 = 20 CFM max
80 = 40 CFM max
120 = 50 CFM max

"D" Duty Cycle
0 = Continuous Operation.
5 = Once shut-down every 12 hours required for auto draining.

"B" Bypass
0 = With internal bypass.
1 = No internal bypass.

"YY" Media Density
-04 = Low efficeincy
-08 = High efficeincy
-10 = Ultra high efficeincy

"Z" Inlet Orientation
L = Left side
R = Right side
(Not available on CCV1500)

Example: CCV4501-08L

Note: Not all configurations are standard.
See CCV Assemblies for a complete description of all assemblies offered.

CCV System Flow

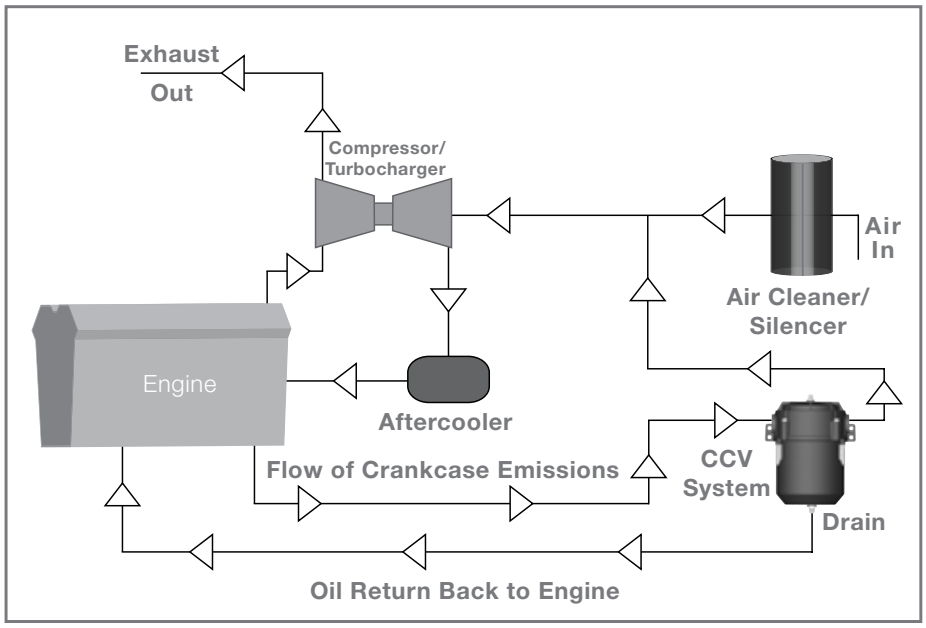

Questions? Contact Technical Support:
800 344 3286 or 209 521 7860 ext. 7555
e-mail: racortech@parker.com

CCV™ Assemblies

CCV1500 Series – Maximum Flow 1 CFM

Part No.	Description	Inlet Side	Media Density	Inlet/Outlet Thread Size	Check Valve	Swivel Fitting (Qty.)	Hose I.D. (Qty.)
CCV1500-04	Bypass Assembly	N/A	Low	N/A	N/A	N/A	3/4” (3 ft.)
CCV55365-04	Replacement Filter	N/A	Low	N/A	N/A	N/A	N/A

CCV3500 Series – Maximum Flow 3 CFM

Part No.	Description	Inlet Side	Media Density	Inlet/Outlet Barb Size	Check Valve	Swivel Fitting (Qty.)	Hose I.D. (Qty.)
CCV3500-08L ***CCV3500-08R***	Continuous with Internal Bypass	Left Right	High	3/4” Barb	1/4” NPT	#6 JIC (1 pc.)	3/8” (6 ft.)
CCV3501-08L ***CCV3501-08R***	Continuous - Non-Bypass	Left Right	High	3/4” Barb	1/4” NPT	#6 JIC (1 pc.)	3/8” (6 ft.)
CCV3550-08L ***CCV3550-08R***	Intermittent with Internal Bypass	Left Right	High	3/4” Barb	1/4” NPT	#6 JIC (1 pc.)	3/8” (3 ft.)
CCV3551-08L ***CCV3551-08R***	Intermittent - Non-Bypass	Left Right	High	3/4” Barb	1/4” NPT	#6 JIC (1 pc.)	3/8” (3 ft.)
CCV55304-08 ***CCV55404-08***	Replacement Filter	N/A	Intermittent Continuous	N/A	N/A	N/A	N/A

G

CCV4500 Series – Maximum Flow 10 CFM

Part No.	Description	Inlet Side	Media Density	Inlet/Outlet Thread Size	Check Valve	Swivel Fitting (Qty.)	Hose I.D. (Qty.)
CCV4500-08L ***CCV4500-08R***	Bypass Assembly	Left Right	High	1-3/16”-12 SAE	1/4” NPT	#6 JIC (2 pcs.)	3/8” (3 ft.)
CCV4501-08L ***CCV4501-08R***	Non-Bypass Assembly	Left Right	High	1-3/16”-12 SAE	1/4” NPT	#6 JIC (2 pcs.)	3/8” (3 ft.)
CCV4500-10L ***CCV4500-10R***	Bypass Assembly	Left Right	Ultra	1-3/16”-12 SAE	1/4” NPT	#6 JIC (2 pcs.)	3/8” (3 ft.)
CCV4501-10L ***CCV4501-10R***	Non-Bypass Assembly	Left Right	Ultra	1-3/16”-12 SAE	1/4” NPT	#6 JIC (2 pcs.)	3/8” (3 ft.)
CCV55248-08 ***CCV55248-10***	Replacement Filter	N/A	High Ultra	N/A	N/A	N/A	N/A

CCV™ Assemblies

CCV6000 Series – Maximum Flow 20 CFM

Part No.	Description	Inlet Side	Media Density	Inlet/Outlet Thread Size	Check Valve	Swivel Fitting (Qty.)	Hose I.D. (Qty.)
CCV6000-08L ***CCV6000-08R***	Bypass Assembly	Left Right	High	1-5/8”-12 SAE	1/4” NPT	#6 JIC (2 pcs.)	3/8” (3 ft.)
CCV6001-08L ***CCV6001-08R***	Non-Bypass Assembly	Left Right	High	1-5/8”-12 SAE	1/4” NPT	#6 JIC (2 pcs.)	3/8” (3 ft.)
CCV6000-10L ***CCV6000-10R***	Bypass Assembly	Left Right	Ultra	1-5/8”-12 SAE	1/4” NPT	#6 JIC (2 pcs.)	3/8” (3 ft.)
CCV6001-10L ***CCV6001-10R***	Non-Bypass Assembly	Left Right	Ultra	1-5/8”-12 SAE	1/4” NPT	#6 JIC (2 pcs.)	3/8” (3 ft.)
CCV55274-08 ***CCV55274-10***	Replacement Filter	N/A	High Ultra	N/A	N/A	N/A	N/A

CCV8000 Series – Maximum Flow 40 CFM

Part No.	Description	Inlet Side	Media Density	Inlet/Outlet Thread Size	Check Valve	Swivel Fitting (Qty.)	Hose I.D. (Qty.)
CCV8000-08L ***CCV8000-08R***	Bypass Assembly	Left Right	High	1-7/8”-12 SAE	3/8” NPT	#8 JIC (2 pcs.)	1/2” (3 ft.)
CCV8000-08L ***CCV8000-08R***	Non-Bypass Assembly	Left Right	High	1-7/8”-12 SAE	3/8” NPT	#8 JIC (2 pcs.)	1/2” (3 ft.)
CCV8000-10L ***CCV8000-10R***	Bypass Assembly	Left Right	Ultra	1-7/8”-12 SAE	3/8” NPT	#8 JIC (2 pcs.)	1/2” (3 ft.)
CCV8001-10L ***CCV8001-10R***	Non-Bypass Assembly	Left Right	Ultra	1-7/8”-12 SAE	3/8” NPT	#8 JIC (2 pcs.)	1/2” (3 ft.)
CCV55222-08 ***CCV55222-10***	Replacement Filter	N/A	High Ultra	N/A	N/A	N/A	N/A

CCV12000 Series – Maximum Flow 50 CFM

Part No.	Description	Inlet Side	Media Density	Inlet/Outlet Thread Size	Check Valve	Swivel Fitting (Qty.)	Hose I.D. (Qty.)
CCV12000-08L ***CCV12000-08R***	Bypass Assembly	Left Right	High	1-7/8”-12 SAE	3/8” NPT	#8 JIC (2 pcs.)	1/2” (3 ft.)
CCV12001-08L ***CCV12001-08R***	Non-Bypass Assembly	Left Right	High	1-7/8”-12 SAE	3/8” NPT	#8 JIC (2 pcs.)	1/2” (3 ft.)
CCV12000-10L ***CCV12000-10R***	Bypass Assembly	Left Right	Ultra	1-7/8”-12 SAE	3/8” NPT	#8 JIC (2 pcs.)	1/2” (3 ft.)
CCV12001-10L ***CCV12001-10R***	Non-Bypass Assembly	Left Right	Ultra	1-7/8”-12 SAE	3/8” NPT	#8 JIC (2 pcs.)	1/2” (3 ft.)
CCV55222-12-08 ***CCV55222-12-10***	Replacement Filter	N/A	High Ultra	N/A	N/A	N/A	N/A

Questions? Contact Technical Support:
800 344 3286 or 209 521 7860 ext. 7555
e-mail: racortech@parker.com

CCV Specifications

	CCV1500	CCV3500	CCV4500	CCV6000	CCV8000	CCV12000
Max. Flow Rate	1 CFM (28 LM)	3 CFM (85 LM)	10 CFM (283 LM)	20 CFM (566 LM)	40 CFM (1133 LM)	50 CFM (1416 LM)
Max. Engine Rating	40 HP (30 KW)	120 HP (89 KW)	400 HP (298 KW)	800 HP (597 KW)	1600 HP (1193 KW)	2000 HP (1491 KW)
Inlet/Outlet Port Size	3/4” hose	3/4” hose	1 3/16”-12 STOR	1 5/8”-12 STOR	1 7/8”-12 STOR	1 7/8”-12 STOR
Weight	1.5 lbs (0.7 kg)	2.3 lbs (1.0 kg)	3.3 lbs (1.5 kg)	5.0 lbs (2.3 kg)	8.7 lbs (3.9 kg)	9.3 lbs (4.2 kg)
Low Density Filter Replacement	CCV55365-04	N/A	CCV55248-04	N/A	N/A	N/A
High Density Filter Replacement	N/A	CCV55304-08	CCV55248-08	CCV55274-08	CCV55222-08	CCV55222-12-08
Ultra Density Filter Replacement	N/A	N/A	CCV55248-10	CCV55274-10	CCV55222-10	CCV55222-12-10
Housing Material	Glass-filled nylon and black powder epoxy-coated steel bracket.	Glass-filled nylon components.	Die cast head, glass-filled nylon and black powder epoxy-coated steel bowl.	Die cast head, glass-filled nylon and black powder epoxy-coated steel bowl.	Die cast head, glass-filled nylon and black powder epoxy-coated steel bowl.	Die cast head, glass-filled nylon and black powder epoxy-coated steel bowl.
Crankcase Pressure Regulator	Vacuum Limiting valve	Integral	Integral	Integral	Integral	Integral
Bypass/Change Indicator	N/A	Integral	Integral or Remote	Integral or Remote	Integral or Remote	Integral or Remote
Engine BlockCheck Valve Return Fitting	N/A	1/4” NPT	1/4” NPT	1/4” NPT	3/8” NPT	3/8” NPT
Swivel Fitting (Qty.)	N/A	#6 JIC (2 pcs.)	#6 JIC (2 pcs.)	#6 JIC (2 pcs.)	#8 JIC (2 pcs.)	#8 JIC (2 pcs.)
Oil Drain Hose I.D.	N/A	0.375 in. (0.95 cm)	0.375 in. (0.95 cm)	0.375 in. (0.95 cm)	0.5 in. (1.27 cm)	0.5 in. (1.27 cm)

Units can be manifolded to handle higher flow rates. Do not use CCV1500 in continuous duty applications.

CCV Dimensions

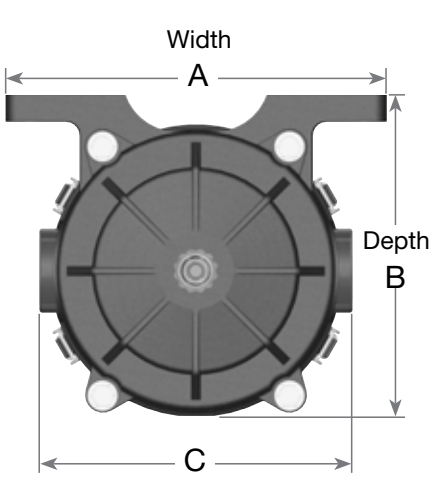

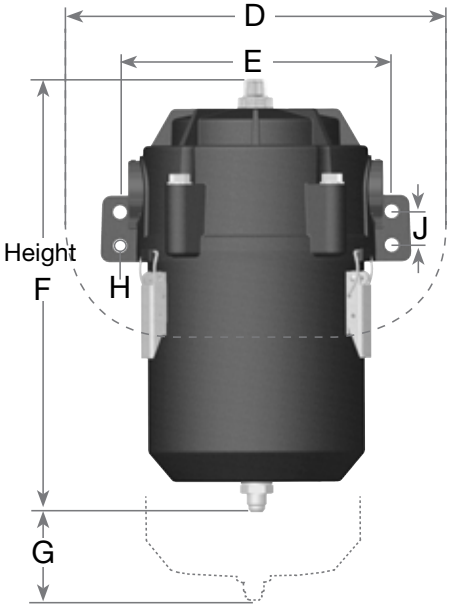

	1500 Series		3500 Series		4500 Series		6000 Series		8000 Series		12000 Series	
Dimension	IN	CM	IN	CM	IN	CM	IN	CM	IN	CM	IN	CM
A	8.0	20.3	7.1	18.1	7.2	18.3	8.6	21.8	10.6	26.9	10.6	26.9
B	5.0	12.7	6.3	16.0	5.6	14.2	7.3	18.5	9.3	23.6	9.3	23.6
C	3.6	9.1	5.5	14.0	5.6	14.2	7.1	18.0	9.1	23.1	9.1	23.1
D	8.2	20.8	7.1	18.1	7.5	19.1	11.3	28.7	13.3	33.8	13.3	33.8
E	7.0	17.8	6.0	15.2	6.0	15.2	7.5	19.1	9.5	24.1	9.5	24.1
F	5.0	12.7	7.0	17.8	9.3	23.6	12.0	30.5	13.9	35.3	18.0	45.7
G[1]	6.0	15.2	4.6	11.7	2.3	5.7	4.0	10.1	5.0	12.7	6.0	15.2
H	0.38	0.97	0.43	1.09	0.43	1.09	0.37	0.94	0.43	1.09	0.43	1.09
J[2]	N/A	N/A	N/A	N/A	N/A	N/A	0.93	2.4	1.06	2.7	1.06	2.7

[1] *Dimension "G" is the minimum filter removal clearance - allow more room if possible for ease of service. CCV1500 and CCV3500 Series filters are serviced from top.*

[2] *Dimension "J" is not applicable on CCV1500, 3500, and 4500 assemblies because there are only two (2) mounting holes. All other units have four (4) mounting holes.*

Questions? Contact Technical Support:
800 344 3286 or 209 521 7860 ext. 7555
e-mail: racortech@parker.com

CCV Hose and Fitting Kits

CCV4501 Series Assemblies

Part No.	Description
CCV55024	(1) ¾” fitting, (1) 1” fitting, (1) ¾” ID x 4 foot long hose, (1) 1” ID x 4 foot long hose, (4) clamps and (4) ties
CCV55025	(2) 1” fittings, (1) 1” ID x 8 foot long hose, (4) clamps and (4) ties
CCV55037	(1) 1-¼” fitting, (1) 1” fitting, (1) 1-¼” ID x 4 foot long hose, (1) 1” ID x 4 foot long hose, (4) clamps and (4) ties
CCV55038	(1) ¾” fitting, (1) 1” fitting, (1) ¾” ID x 6 foot long hose, (1) ¾” Tee fitting, (1) 1” ID x 4 foot long hose, (8) clamps and (8) ties

CCV6001 Series Assemblies

Part No.	Description
CCV55046	(2) 1-¼” fittings, (1) 1-¼” ID x 8 foot long hose, (4) clamps and (4) ties
CCV55047	(2) 1-¼” fittings, (1) 1-¼” Tee fitting, (1) 1-¼” ID x 10 foot long hose, (8) clamps and (8) ties
CCV55048	(2) 1-¼” fittings, (1) 1-½” ID x 4 foot long hose, (1) bushing reducer, (1) 1-¼” ID x 4 foot long hose, (4) clamps and (4) ties
CCV55049	(2) 1-¼” fittings, (1) 1-½” ID x 5 foot long hose w/2” cuff, (1) bushing reducer, (1) 1-¼” ID x 4 foot long hose, (4) clamps and (4) ties

CCV8001 and CV12001 Series Assemblies

Part No.	Description
CCV55067	(2) 1-½” fittings, (1) 1-½” ID x 10 foot long hose, (1) bushing reducer, (4) clamps and (4) ties
CCV55068	(2) 1-½” fittings, (1) 1-½” Tee fitting , (1) 1-½” ID x 12 foot long hose, (2) bushing reducers, (8) clamps and (8) ties
CCV55069	(2) 1-½” fittings, (1) 1-½” ID x 5 foot long hose w/2” cuff, (1) bushing reducer, (1) 1-½” ID x 5 foot long hose, (4) clamps and (4) ties

Hose and Fitting Kits

Hose and fitting kits include inlet and outlet fittings and enough hose for a typical installation of a CV assembly. CV assemblies require special fittings only available from Racor. Hose and fitting kits are available in various sizes and configurations.

Bulk Hose Kits Drain Hoses

Part No.	Push-Lok Hose Size
CCV836-6-25	3/8 I.D., 25’ Roll
CCV836-6-50	3/8 I.D., 50’ Roll
CCV836-8-25	1/2 I.D., 25’ Roll
CCV836-8-50	1/2 I.D., 50’ Roll

Inlet/Outlet Hose Kits

(available by the foot)

Part No.	Corrugated Hose Size (I.D.)
CV1034-01	3/4”
CV1100-01	1”
CV1114-01	1 1/4”
CV1112-01	1 1/2”

Hump Hose Fittings

These are designed to be used with existing air cleaner to turbo rubber adapters.

Part No.	Hose
CCV55540	0.75”
CCV55113	1.0”
CCV55114	1.25”
CCV55115	1.5”

G

Marine Air Filters with CCV Connector

The Racor Marine Air Filter and the Racor CCV can be connected to bring you effective air and crankcase filtration with one simple hose and clamp.

Marine Air Filter

Marine Air Filter	Replacement Filter Part No.	Outlet Dia.	Length	Hose Barb	Dia.
AF M408512	AF M8040	4”	12”	1”	8.5”
AF M501012	AF M8050	5”	12”	1”	10”
AF M601212	AF M8060	6”	12”	1.25”	12”

All Marine Air Filters include Installation Instructions
Note: AF M601212 includes 1-¼” x 1-½” Bushing (connects to 1-½” I.D. Hose)

CCV Heater Kits

CCV heater kits are an optional accessory for engine applications operating in severe cold weather. Emulsion and/or ice deposits on the element and inside the canister develop when the air blast from the radiator cools the CCV assembly.

The emulsions are created by water vapors condensing and combining with oil droplets in the cold air stream of the CCV system. This build-up can prematurely choke the filter and reduce filter life. The heater band and insulating sleeve are placed over the CCV canister and insulate the assembly to prevent the emulsion build-up.

Reduced filter life can be avoided by installing a Racor CCV Heater Kit.

- **Available for AC or DC power supplies**

Insulating Sleeve

Heater Band

CCV Conversion Kits

CCV55613-08 (High Density)
CCV55613-10 (Ultra Density)

The CCV55613-08 and CCV55613-10 allow the CCV8001 to be converted to a CCV12001. The CCV12001 series offers 60% additional media. The CCV12001 series is great for applications where extra capacity is desired and immediate engine accessibility is not available. It allows for increased efficiency and longer service intervals. Kit includes element, wear spacer, o-rings, and CCV12001 bowl

Tap Sleeves

Tap Sleeves are used for inline installation between filter and turbocharger. Pick size needed by matching pipe diameter.

Part No.	Size
CCV30100	3” x 1”
CCV40100	4” x 1”
CCV50125	5” x 1-1/4”
CCV60125	6” x 1-1/4”

Note: CCV60125 includes a 1 1/4” by 1 1/2” bushing reducer (connects to 1 1/2” ID hose) part # 55020.

Questions? Contact Technical Support:
800 344 3286 or 209 521 7860 ext. 7555
e-mail: racortech@parker.com

CCV1500-04 Replacement Parts

Part No.		Description
1.	CCV55365-04	Replacement Filter - Low Density

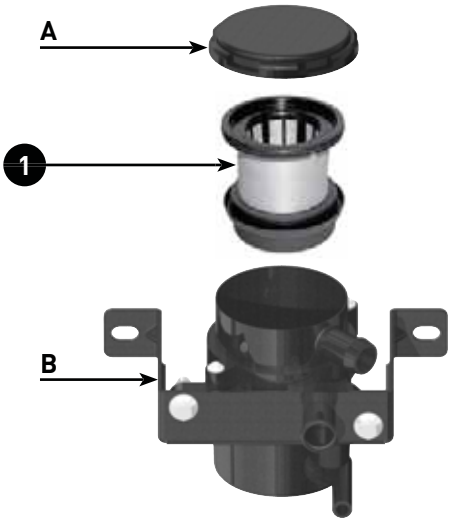

G

CCV3500, CCV3501, CCV3550 and CCV3551 Replacement Parts

Part No.		Description
1.	CCV55404-08	Replacement Filter - High Density *(Kit includes B and C)*
2.	CCV55279	Check Valve Kit

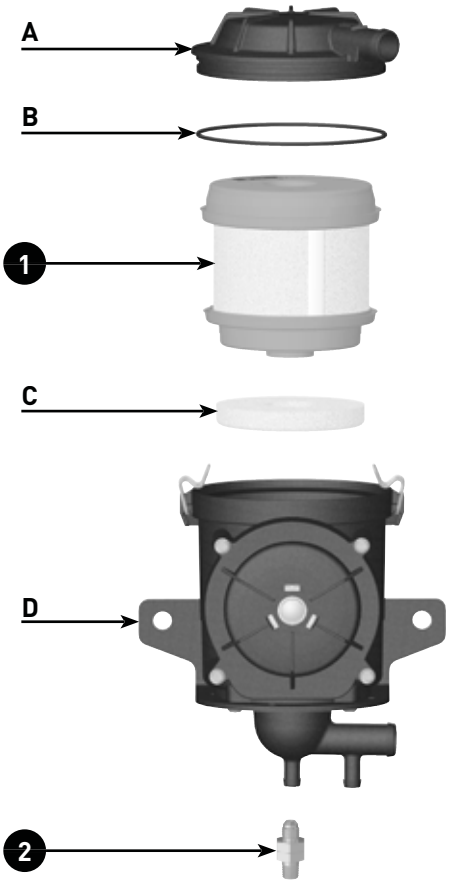

CCV3500 and CCV3501

CCV3550 and CCV3551

CCV4500 Replacement Parts

Part No.		Description
1.	CCV55081	Bypass Indicator Kit
2.	CCV55246L CCV55246R	Head Assembly (Left Side Inlet) *(Kit includes 1, 3, A, B, C, D, E, and H)* Head Assembly (Right Side Inlet) *(Kit includes 1, 3, A, B, C, D, E, and H)*
3.	CCV55247	Diaphram Kit
4.	CCV55248-08 CCV55248-10	Filter Replacement - High Density *(Kit includes F and G)* Filter Replacement - Ultra Density *(Kit includes F and G)*
5.	CCV55249	Can Assembly *(Kit includes G)*
6.	CCV55279	1/4" MNPT Drain/Check Valve Kit

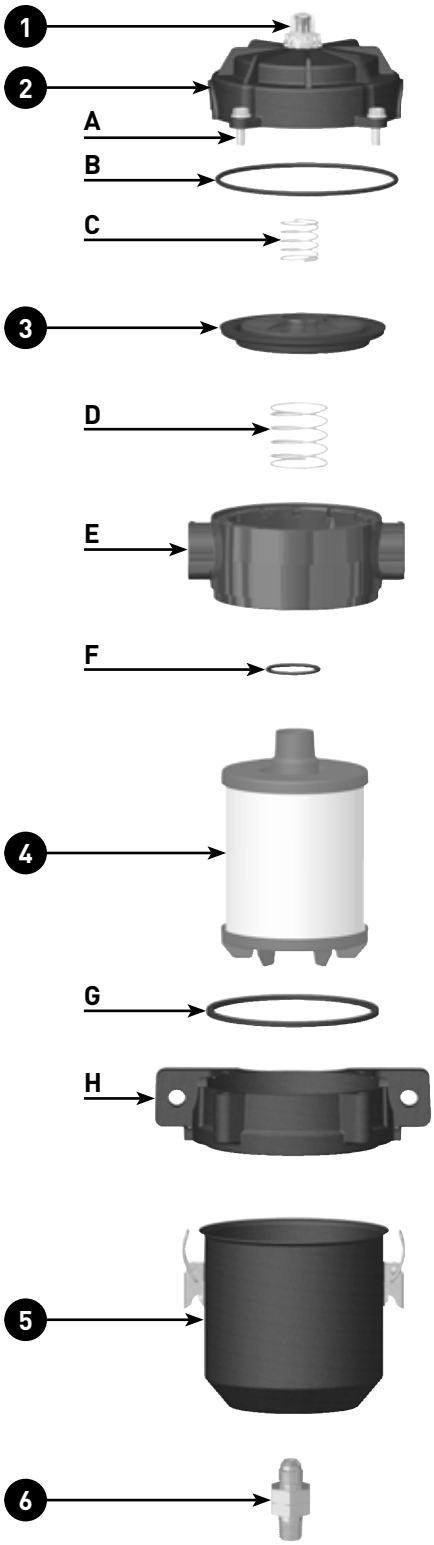

Hose and Fitting Kit

Part No.	Description
CCV55024	(1) 3/4" fitting, (1) 1" fitting, (1) 3/4" ID x 4' hose, (1) 1" ID x 4' hose, (4) clamps, (4) ties
CCV55025	(2) 1" fittings, (1) 1" ID x 8' hose, (4) clamps, (4) ties
CCV55037	(1) 1 1/4" fitting, (1) 1" fitting, (1) 1 1/4" ID x 4' hose, (1) 1" ID x 4' hose, (4) clamps, (4) ties
CCV55038	(1) 3/4" fitting, (1) 1" fitting, (1) 3/4" ID x 6' hose, (1) 3/4" Tee fitting, (1) 1" ID x 4' hose, (8) clamps, (8) ties

Inlet/Outlet Fitting Kit

Part No.	Description
CCV55250	1" OD Hose Barb to 1 3/16" SAE Fitting
CCV55251	3/4" OD Hose Barb to 1 3/16" SAE fitting
CCV55280	1 1/4" OD Hose Barb to 1 3/16" SAE fitting

Questions? Contact Technical Support:
800 344 3286 or 209 521 7860 ext. 7555
e-mail: racortech@parker.com

CCV6000 Replacement Parts

Part No.		Description
1.	CCV55081	Bypass Indicator Kit
2.	CCV55272L CCV55272R	Head Assembly (Left Side Inlet) *(Kit includes 1, 3, A, B, C, D, E, and H)* Head Assembly (Right Side Inlet) *(Kit includes 1, 3, A, B, C, D, E, and H)*
3.	CCV55273	Diaphram Kit
4.	CCV55274-08 CCV55274-10	Filter Replacement - High Density *(Kit includes F and G)* Filter Replacement - Ultra Density *(Kit includes F and G)*
5.	CCV55275	Can Assembly *(Kit includes G)*
6.	CCV55279	1/4" MNPT Drain/Check Valve Kit

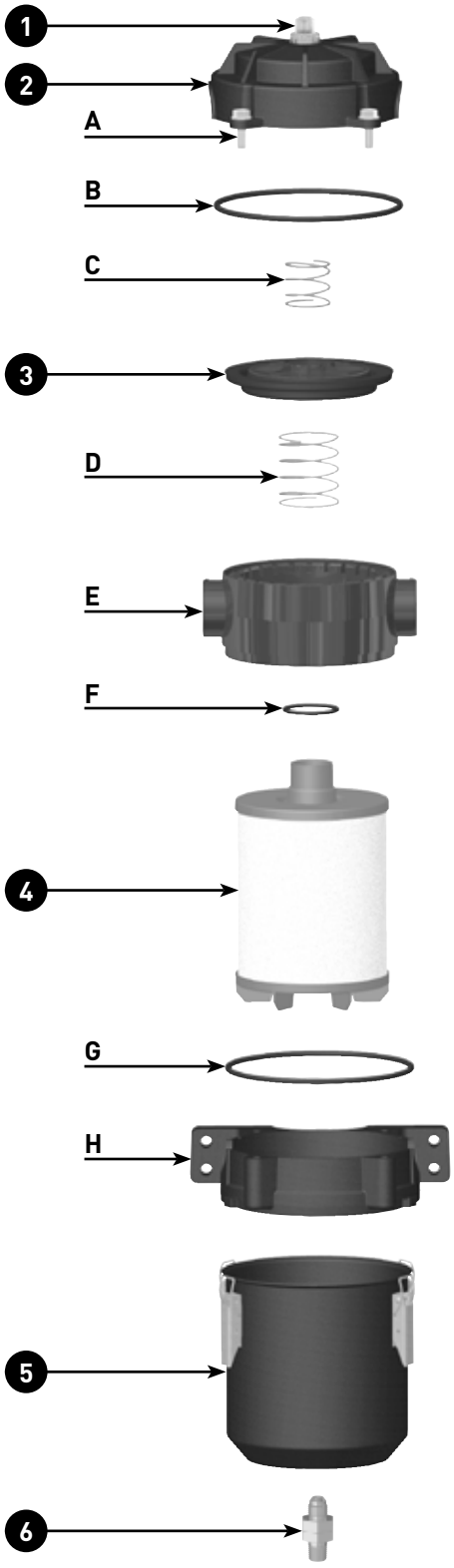

Hose and Fitting Kit

Part No.	Description
CCV55046	(2) 1 1/4" fitting, (1) 1 1/4" ID x 8' hose, (4) clamps, (4) ties
CCV55047	(2) 1 1/4" fitting, (1) 1 1/4" Tee fitting, 1 1/4" ID x 10' hose, (8) clamps, (8) ties
CCV55048	(2) 1 1/4" fitting, (1) 1 1/2" ID x 4' hose, (1) bushing reducer, (1) 1 1/4" ID x 4' hose, (4) clamps, (4) ties
CCV55049	(2) 1 1/4" fitting, (1) 1 1/2" ID x 5' hose w/2" cuff, (1) bushing reducer, (1) 1 1/4" ID x 4' hose, (4) clamps, (4) ties

Inlet/Outlet Fitting Kit

Part No.	Description
CCV55267	1 1/2" OD Hose Barb to 1 5/8" SAE Fitting

G

CCV8000 Replacement Parts

Part No.		Description
1.	CCV55081	Bypass Indicator Kit
2.	CCV55220L CCV55220R	Head Assembly (Left Side Inlet) *(Kit includes 1, 3, A, B, C, D, E, and H)* Head Assembly (Right Side Inlet) *(Kit includes 1, 3, A, B, C, D, E, and H)*
3.	CCV55221	Diaphram Kit
4.	CCV55222-08 CCV55222-08	Filter Replacement - High Density *(Kit includes F and G)* Filter Replacement - Ultra Density *(Kit includes F and G)*
5.	CCV55223	Can Assembly *(Kit includes G)*
6.	CCV55080	3/8" MNPT Drain/Check Valve Kit

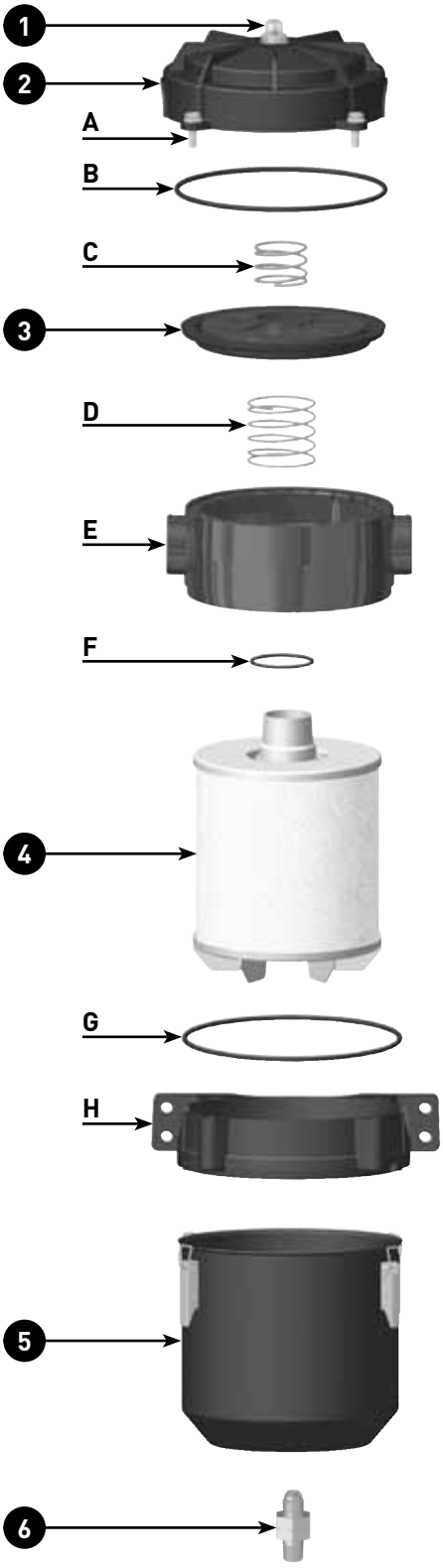

Hose and Fitting Kit

Part No.	Description
CCV55067	(2) 1 1/2" fittings, (1) 1 1/2" ID x 10' hose, (1) bushing reducer, (4) clamps, (4) ties
CCV55068	(2) 1 1/2" fittings, (1) 1 1/2" Tee fitting, 1 1/2" ID x 12' hose, (2) bushing reducers, (8) clamps, (8) ties
CCV55069	(2) 1 1/2" fittings, (1) 1 1/2" ID x 5' hose w/2" cuff, (1) bushing reducer, (1) 1 1/2" ID x 5' hose, (4) clamps, (4) ties

Inlet/Outlet Fitting Kit

Part No.	Description
CCV55218	1 1/2" OD Hose Barb to 1 7/8" SAE Fitting

Questions? Contact Technical Support:
800 344 3286 or 209 521 7860 ext. 7555
e-mail: racortech@parker.com

CCV12000 Replacement Parts

Part No.		Description
1.	CCV55015	Bypass Indicator Kit
2.	CCV55200L CCV55200R	Head Assembly (Left Side Inlet) *(Kit includes 1, 3, A, B, C, D, E, and H)* Head Assembly (Right Side Inlet) *(Kit includes 1, 3, A, B, C, D, E, and H)*
3.	CCV55221	Diaphram Kit
4.	CCV55222-12 CCV55222-12-10	Filter Replacement - High Density *(Kit includes F and G)* Filter Replacement - Ultra Density *(Kit includes F and G)*
5.	CCV55570	Can Assembly *(Kit includes G)*
6.	CCV55080	3/8" MNPT Drain/Check Valve Kit

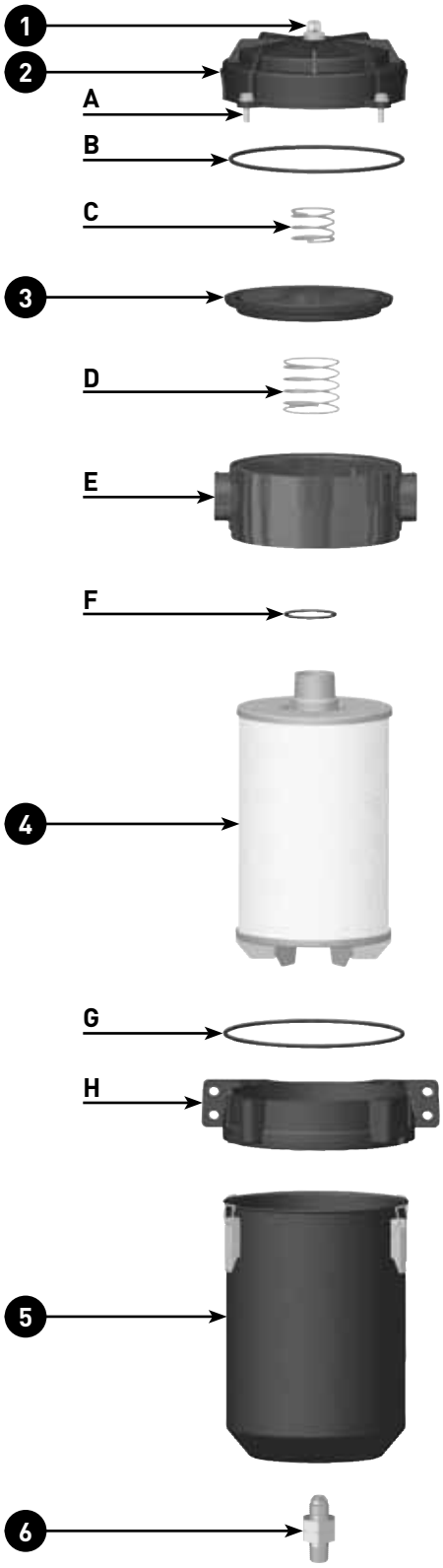

Hose and Fitting Kit

Part No.	Description
CCV55067	(2) 1 1/2" fittings, (1) 1 1/2" ID x 10' hose, (1) bushing reducer, (4) clamps, (4) ties
CCV55068	(2) 1 1/2" fittings, (1) 1 1/2" Tee fitting, 1 1/2" ID x 12' hose, (2) bushing reducers, (8) clamps, (8) ties
CCV55069	(2) 1 1/2" fittings, (1) 1 1/2" ID x 5' hose w/2" cuff, (1) bushing reducer, (1) 11/2" ID x 5' hose, (4) clamps, (4) ties

Inlet/Outlet Fitting Kit

Part No.	Description
CCV55218	1 1/2" OD Hose Barb to 1 7/8" SAE Fitting

G

Discontinued Assemblies

Part No.		Description
1.	CV820SK CV1000SK	Replacement Filter For CV820 Replacement Filter For CV1000

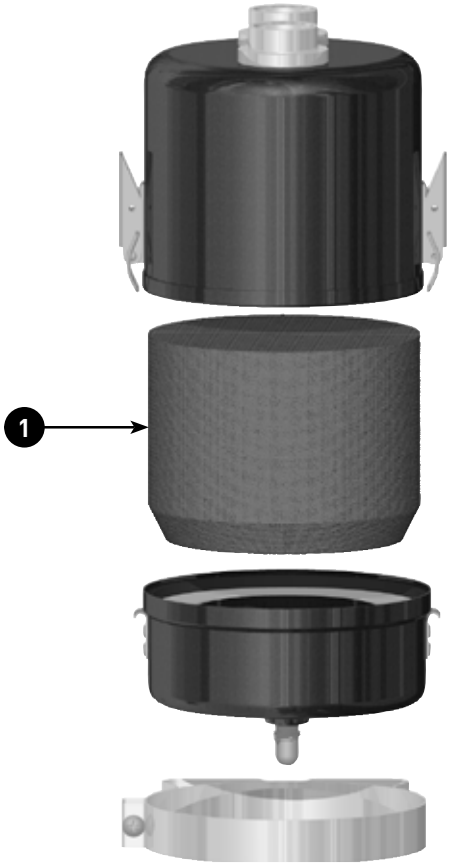

Specifications

	CV820	CV1000
Max. Engine Horsepower Rating	0-350 HP (0-261 KW)	350-600 HP (261-447 KW)
Inlet/Outlet Port Size	1” NPT	1 1/4’ NPT
Max. Air Flow	10 CFM (0.28 CMM)	15 CFM (0.42 CMM)
Replacement Filter	CV820SK	CV1000SK
Height	7.5 in. (19.1 cm)	8.5 in. (21.6 cm)
Diameter	6.0 in. (15.2 cm)	8.1 in. (20.6 cm)
Weight (dry)	2.0 lbs (0.9 kg)	3.0 lbs (1.4 kg)
Sump Capacity	32 oz (0.94 L)	58 oz (1.72 L)
Operating Temp.	-40o to +255o F (-40o to +121o C)	

Hose & Fitting Kits

Part No.	Description
CV1100	5 feet of 1” hose, fittings, clamps and ties
CV2114	7 1/2 feet of 1 1/4” hose, 1 1/4” Tee fitting, fitting, clamps and ties
CV1112	5 feet of 1 1/2“ hose, fitting, clamps and ties
CV1200	5 feet of 1 1/2” hose with 2” cuff, fitting, clamps and ties
CV1038	Air Box Drain Hose Kit, 8 feet of 3/8” hose, check valve, fittings, clamps and ties

Questions? Contact Technical Support:
800 344 3286 or 209 521 7860 ext. 7555
e-mail: racortech@parker.com

Part Number Index

A

PRODUCT	PAGE
AF M408512	G18

C

PRODUCT	PAGE#
CCV12000	G6, G15
CCV12000-08L	G14
CCV12000-08R	G14
CCV12000-10L	G14
CCV12000-10R	G14
CCV12001-08L	G14
CCV12001-08R	G14
CCV12001-10L	G14
CCV12001-10R	G14
CCV1500	G15
CCV1500-04	G13
CCV30100	G18
CCV3500	G15
CCV3500-08L	G13
CCV3500-08R	G13
CCV3501-08L	G13
CCV3501-08R	G13
CCV3550-08L	G13
CCV3550-08R	G13
CCV3551-08L	G13
CCV3551-08R	G13
CCV40100	G18
CCV4500	G6, G15
CCV4500-08L	G13
CCV4500-08R	G13
CCV4500-10L	G13
CCV4500-10R	G13
CCV4501-08L	G13
CCV4501-08R	G13
CCV4501-10L	G13
CCV4501-10R	G13
CCV50125	G18
CCV55015	G23
CCV55024	G5, G17, G20
CCV55025	G5, G17, G20
CCV55037	G5, G17, G20
CCV55038	G5, G17, G20
CCV55046	G5, G17, G21
CCV55047	G5, G17, G21
CCV55048	G5, G17, G21
CCV55049	G5, G17, G21
CCV55067	G5, G17, G22, G23
CCV55068	G5, G17, G22, G23
CCV55069	G5, G17, G22, G23
CCV55080	G8, G22, G23
CCV55081	G20, G21, G22
CCV55113	G5, G17
CCV55114	G5, G17
CCV55115	G5, G17
CCV55121	G7
CCV55200L	G23
CCV55200R	G23
CCV55218	G22, G23
CCV55220L	G22
CCV55220R	G22
CCV55221	G22, G23
CCV55222-08	G14, G8, G22
CCV55222-10	G8, G14
CCV55222-12	G23
CCV55222-12-08	G8, G14
CCV55222-12-10	G8, G14, G23
CCV55223	G22
CCV55246L	G20
CCV55246R	G20
CCV55247	G20
CCV55248-04	G8
CCV55248-08	G8, G13, G20
CCV55248-10	G8, G13, G20
CCV55249	G20

C continued

PRODUCT	PAGE#
CCV55250	G20
CCV55251	G20
CCV55267	G21
CCV55272L	G21
CCV55272R	G21
CCV55273	G21
CCV55274-08	G8, G14, G21
CCV55274-10	G8, G14, G21
CCV55275	G21
CCV55279	G8, G19, G20, G21
CCV55280	G20
CCV55374	G6
CCV55385	G6
CCV55390	G6
CCV55304-08	G13
CCV55365-04	G13, G19
CCV55404-08	G13, G19
CCV55540	G5, G17
CCV55547-02	G7
CCV55547-10	G7
CCV55570	G23
CCV6000	G6, G15
CCV6000-08L	G14
CCV6000-08R	G14
CCV6000-10L	G14
CCV6000-10R	G14
CCV6001-08L	G14
CCV6001-08R	G14
CCV6001-10L	G14
CCV6001-10R	G14
CCV60125	G18
CCV8000	G6, G15
CCV8000-08L	G14
CCV8000-08R	G14
CCV8000-10L	G14
CCV8000-10R	G14
CCV8001-10L	G14
CCV8001-10R	G14
CCV836-6-25	G5, G17
CCV836-6-50	G5, G17
CCV836-8-25	G5, G17
CCV836-8-50	G5, G17
CV1000	G24
CV1000SK	G24
CV1034-01	G5, G17
CV1038	G24
CV1100	G24
CV1100-01	G5, G17
CV1112	G24
CV1112-01	G5, G17
CV1114-01	G5, G17
CV1200	G24
CV12000	G7
CV12001	G1, G2
CV2114	G24
CV4501	G1, G2, G7
CV6001	G1, G2, G7
CV8001	G1, G2, G7
CV820	G24
CV820SK	G24

Section: H
Lubrication Filtration

aerospace
climate control
electromechanical
filtration
fluid & gas handling
hydraulics
pneumatics
process control
sealing & shielding

Parker Racor

ENGINEERING YOUR SUCCESS.

Table of Contents

RK46267 Top Load Oil Filter H1
LFS 300 Series Spin On Retrofit Oil Filter Kit H4
LFS 800 Series Bypass Oil Filter H7
Bypass Kits H19
DOC System Automatic Oil Change H23
Never Lo Overview Automatic Gravity Oil Refill System H25
AFG30R Kit Automatic Gravity Oil Kit H26
AFG50R Kit Automatic Gravity Oil Kit H28
RKAFGV12 Kit H30
2MP30R Pressurized Kit H32
ABS Series Bypass Oil Cleaners H34
Testing and Analysis H42
LFS Accessories H44
Part Number Index H46

RK46267

H

The New Generation of Top-Load Filters

A permanent assembly houses Racor top-load oil filter. The top-load filters meet the requirements of today's oil-controlled, high pressure fuel injection systems. Racor media meets the variable geometry and variable nozzle turbocharger requirements. An uncompromising, high level of fluid cleanliness is needed to achieve operating efficiency and reach service life. The environmentally-friendly cartridge oil filters are crushable, incinerable and cost-effective to replace. Filter service is from the top of the module and skin contact is minimal due to the unique screw top cap and oil element attachment. The permanent assembly is customized with a patented automatic drain that allows oil to drain back into the sump when the engine is turned off and the screw top cap is removed for service. This Racor-engineered feature eliminates the waste oil that is left in a standard spin-on filter and thrown away during a filter change. The top-load oil conditioning module is a prime example of value-added system.

A Racor engineering that tailors a filtration system to a specific engine working in a broad range of environments. Development includes detailed analysis of the engine's filtration requirements, change intervals, available mounting space and a cost analysis of the entire program. Racor's investment in rapid prototype equipment provides fit-up assemblies to facilitate the development process.

RK46267

Specifications	RK46267
Flow Rate	40 GPM (151 LPM)
Application	Engine Oil and Hydraulic Oil
Maximum Pressure	150 PSI (10.3 bar)
Height	11.2 in. (28.4 cm)
Diameter	5.8 in. (14.8 cm)
Weight	6.7 lbs (3.03 kg)

Environmental Responsibility

Designing products that help protect the environment is a top priority at Racor Division. Thousands of engineering hours are invested to meet OEM specifications with environmentally-friendly products. Racor top-load oil filters are metal free and crushable, taking less disposal space and incinerable, leaving only a trace amount of ash.

Questions? Contact Technical Support:
800 344 3286 or 209 521 7860 ext. 7555
e-mail: racortech@parker.com

RK46267

Features

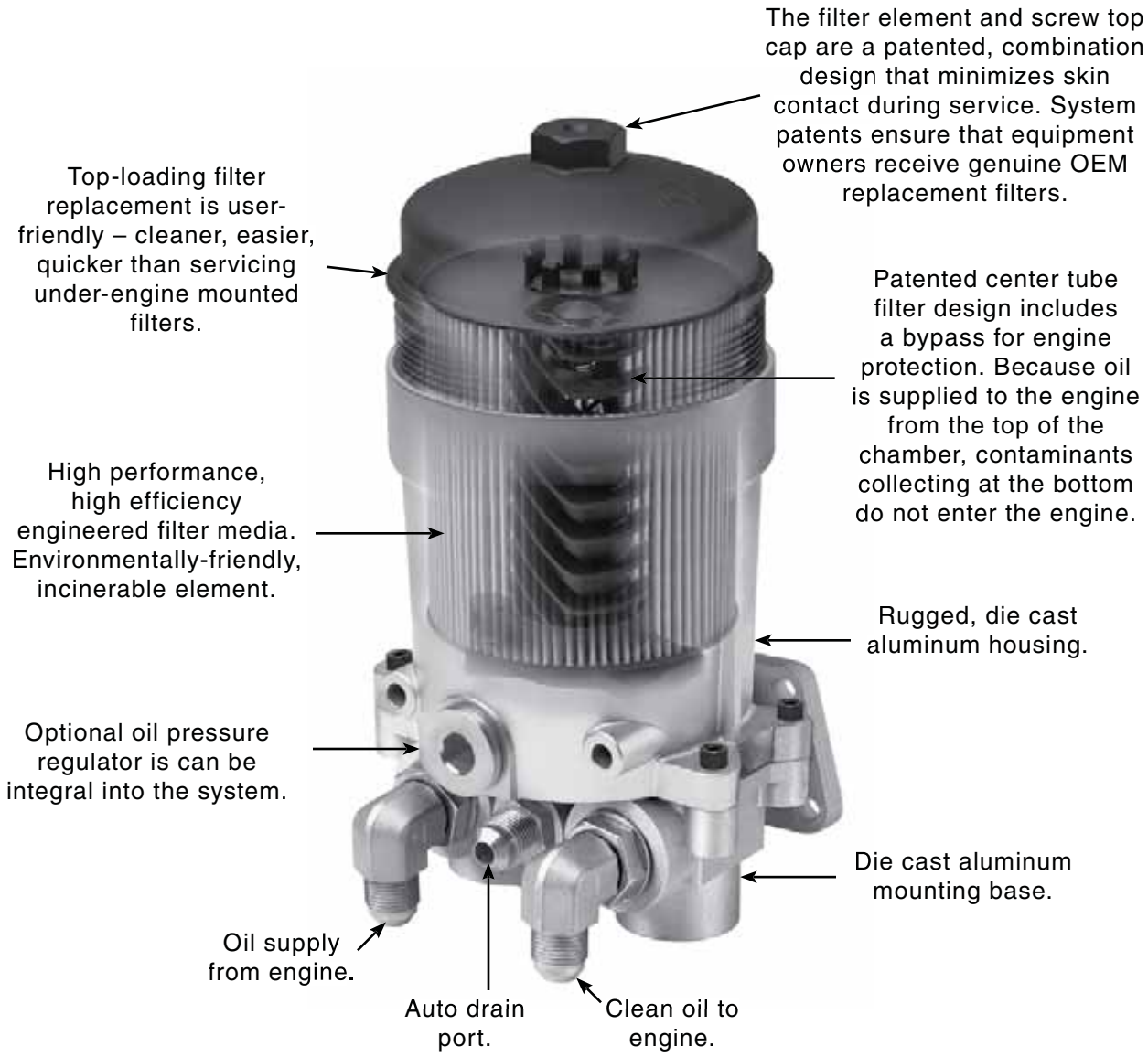

H

LFS 300 Series

LFS 300 Series

The Racor LFS 300 Series Retrofit Kits allow the conversion from a standard metal spin-on disposable canister to a premium cartridge oil filter. These revolutionary systems feature a crushable, burnable replacement cartridge element that offers increased capacity and efficiency.

The Racor 300 Series Lubrication Filtration Systems are unique in their configuration. They feature a spin-on die-cast aluminum canister that mounts directly to the engine in place of the existing spin-on filter.

The engineered design of the Racor cellulose filter element provides for an environmentally clean and efficient oil filter.

Applications:

The models available will fit most Dodge, Ford, General Motors gasoline engines from 2.5L to 7.5L in trucks and the Dodge /Cummins “B” series 5.9L diesel engine.

Products:

The retrofit kits come complete with the aluminum canister with the correct mounting thread on the end cap, a filter element in the canister, and a spare element for the next oil change.

Features:

The LFS 300 Series Retrofit Kits are a three-piece design. They include an aluminum housing which screws directly onto the engine in place of the disposable filter element, a patented premium cellulose filter cartridge and the cartridge mounting end cap.

Simply remove the existing disposable oil filter and screw on the aluminum housing and tighten. This housing will stay on the engine and will not have to be removed to service the filter.

All retrofit kits include bottom and side drain plugs, and by-pass valves.

Available Threads: 3/4”-16, M18 x 1.5, 1”-16 UNF

LFS 331

LFS 333

LFS 335

LFS 339

Questions? Contact Technical Support:
800 344 3286 or 209 521 7860 ext. 7555
e-mail: racortech@parker.com

LFS 300 Series Overview

Specifications	LFS 331	LFS 333	LFS 335	LFS 339
Flow Rate	9 GPM (34 LPM)	9 GPM (34 LPM)	16 GPM (61 LPM)	16 GPM (61 LPM)
Inlet Port Size	3/4”-16 UNF	18 mm X 1.5	3/4”-16 UNF	1”-16 UNF
Mounting Nut Size	1-1/16 in. (2.7 cm)	1-1/16 in. (2.7 cm)	1-1/16 in. (2.7 cm)	1-1/16 in. (2.7 cm)
Engine Application	Dodge Gasoline Truck Model Years 1991-1999	General Motors Gasoline Truck Model Years 1981-1998	Ford Gasoline Truck Model Years 1977-1999	Dodge Truck Diesel Model Years 1986-2000
Replacement Element	LFS 331-3RE	LFS 331-3RE	LFS 335-7RE	LFS 339-41RE
Maximum Pressure	150 PSI (10.03 bar)	150 PSI (10.03 bar)	150 PSI (10.03 bar)	150 PSI (10.03 bar)
Bypass Setting	11.0 PSI (.75 bar)	20.0 PSI (1.4 bar)	11.0 PSI (.75 bar)	20.0 PSI (1.4 bar)
Service Clearance	7.0 in. (17.8 cm)	7.0 in. (17.8 cm)	8.0 in. (20.3 cm)	9.0 in. (22.9 cm)
Height	5.6 in. (14.2 cm)	5.6 in. (14.2 cm)	5.9 in. (15.0 cm)	7.1 in. (18.0 cm)
Diameter	3.4 in. (8.6 cm)	3.4 in. (8.6 cm)	4.2 in. (10.7 cm)	4.2 in. (10.7 cm)
Weight *(dry)*	1.1 lb (0.5 kg)	1.1 lb (0.5 kg)	1.6 lb (0.7 kg)	1.9 lb (0.9 kg)
Operating Temperature	-40° to +255°F (-40° to +121°C)			

LFS 300 Series

Replacement Parts

LFS 331, **LFS 333**, **LFS 335** and **LFS 339**

	Part Number	Description
1.	N/A	Lid
2.	Replacement Elements	
	LFS 331-3RE	LFS 331
	LFS 331-3RE	LFS 333
	LFS 335-7RE	LFS 335
	LFS 339-41RE	LFS 339
3.	N/A	Housing
4.	**46313**	Seal Kit (LFS 331 & LFS 335)
	46314	Seal kit (LFS 335 & LFS 339)

Additional Parts (not shown)

46311	Installation Instructions

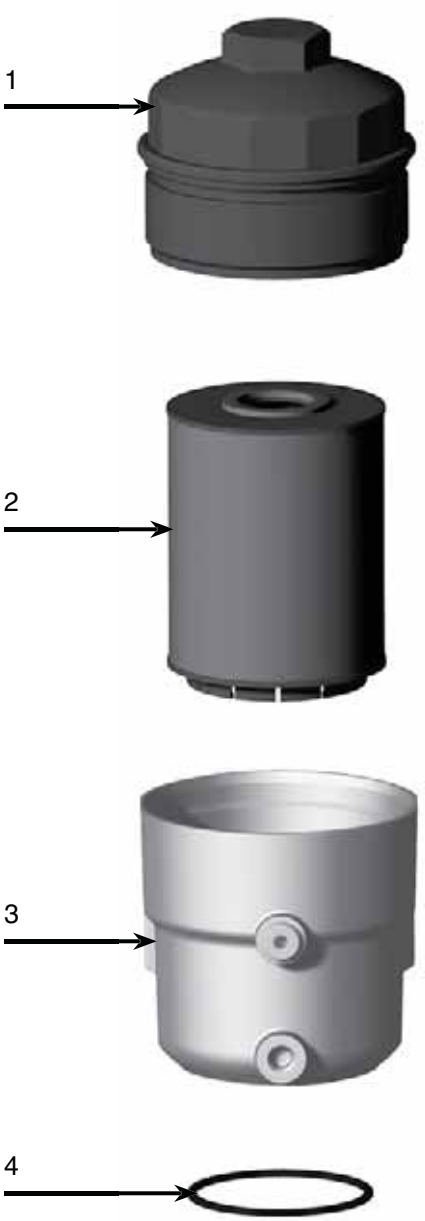

Questions? Contact Technical Support:
800 344 3286 or 209 521 7860 ext. 7555
e-mail: racortech@parker.com

LFS 800 Series

The Racor Bypass Oil Series removes dirt, varnish, ash, tar, soot and other moisture that full-flow filters cannot remove from your engine's oil.

The system also removes condensed water, which forms component-damaging acids if left in the oil.

The Racor Bypass Oil Series removes contaminants down to one micron, which minimizes wear and extends engine component life. The polishing effect of the Racor Bypass Oil Series and the use of the Racor Oil Analysis system will allow the engine oil service intervals to be extended. By reducing the disposal of waste oil, the system also contributes to preserving the environment.

Superior Oil Filtration

The winding pattern of the element creates many identical spiral passageways, tapered in cross section so as to trap the larger particles near the outer portion of the element and the smaller particles as the oil flows inward through the element. Solids are filtered by entrapment in the filter media throughout the entire depth of the element and reduces damaging particle count by 99%.

Bypass Oil Series Benefits

- **Extends the miles/hours between oil changes.**
- **Saves maintenance costs and downtime.**
- **Keeps oil cleaner longer, reducing oil consumption and disposal.**
- **Extends engine life and "rebuild" intervals.**
- **Keeps engines better lubricated which means reduced wear.**
- **Removes damaging moisture.**

LFS 800A

LFS 801

LFS 802

LFS 820

LFS 825

LFS 800 Series

LFS 800 Series Overview

Specifications	LFS 800A	LFS 801	LFS 802
Engine HP (up to)	150	250	400
Sump Capacity	2.5 Gal (9.5 L)	5.0 Gal (18.9 L)	15.0 Gal (57.0 L)
Oil Flow Rate	0.3 GPM (0.5 LPM)	0.4 GPM (1.4 LPM)	0.5 GPM (1.9 LPM)
Inlet Port Size	1/8 in. NPT	1/4 in. NPT	1/4 in. NPT
Replacement Element	LFS 800ABPE	LFS 801BPE	LFS 802BPE
Seal Kit	LFS RK46581	LFS RK46582	LFS RK46582
Canister Cap	0.13 Gal (0.5 L)	0.3 Gal (0.9 L)	0.5 Gal (1.9 L)
Orifice Size	0.04 in. (0.1 cm)	0.04 in. (0.1 cm)	0.4 in. (1.1 cm)
Max Working Pressure	150 PSI (1034 kPa)	150 PSI (1034 kPa)	150 PSI (1034 kPa)
Height	5.5 in. (1.4 cm)	7.5 in. (19.1 cm)	11.0 in. (27.9 cm)
With	4.0 in. (10.2 cm)	5.3 in. (13.3 cm)	5.3 in. (13.3 cm)
Depth	4.5 in. (11.4 cm)	5.7 in. (14.5 cm)	5.7 in. (14.5 cm)
Weight (dry)	3.2 lbs (1.5 kg)	5.3 lbs (2.4 kg)	8.0 lbs (3.6 kg)
Operating Temperature	-40° to +255°F (-40° to +121°C)		

- **For accurate engine flow rates, consult your engine or equipment manual, manufacturer's agent or a Racor distributor.**
- **The only accredited way to extend your oil change interval is through a formal lube analysis program.**

Questions? Contact Technical Support:
800 344 3286 or 209 521 7860 ext. 7555
e-mail: racortech@parker.com

LFS 800 Series Overview

Specifications	LFS 802-S*	LFS 820	LFS 825
Engine HP (up to)	400	500	800
Sump Capacity	15.0 Gal (57.0 L)	30.0 Gal (114.0 L)	45.0 Gal (170.0 L)
Oil Flow Rate	0.5 GPM (1.9 LPM)	1.0 GPM (3.8 LPM)	1.5 GPM (5.7 LPM)
Inlet Port Size	Spin-on	1/2 in. NPT	1/2 in. NPT
Replacement Element	LFS RK46582	LFS 820BPE	LFS 825BPE
Seal Kit	LFS RK755	LFS RK46583	LFS RK46583
Canister Cap	0.5 Gal (1.9 L)	2.5 Gal (9.5 L)	3.5 Gal (13.3 L)
Orifice Size	0.4 in. (1.1 cm)	0.1 in. (0.3 cm)	0.1 in. (0.3 cm)
Max Working Pressure	150 PSI (1034 kPa)	150 PSI (1034 kPa)	150 PSI (1034 kPa)
Height	11.0 in. (27.9 cm)	14.5 in. (36.8 cm)	20.0 in. (50.8 cm)
With	5.3 in. (13.3 cm)	9.0 in. (22.9 cm)	9.0 in. (22.9 cm)
Depth	5.7 in. (14.5 cm)	9.2 in. (23.3 cm)	9.2 in. (23.3 cm)
Weight (dry)	8.0 lbs (3.6 kg)	13.7 lbs (6.3 kg)	18.9 lbs (8.6 kg)
Operating Temperature	-40° to + 255°F (-40° to + 121°C)		

Notes:* The LFS802-S is a replacement spin-on filter for CAT: C10, C12, and C15, 3176 with 1 3/8”-16 NPT threads.

LFS 800A

Mounting Information

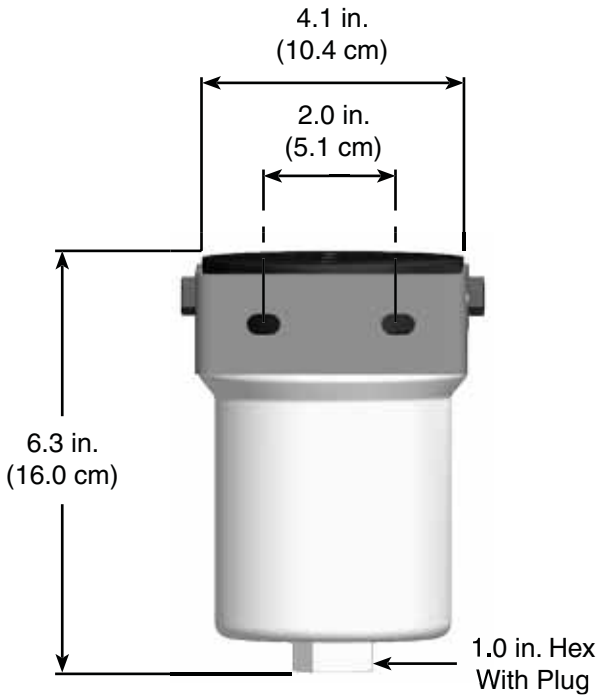

Back View

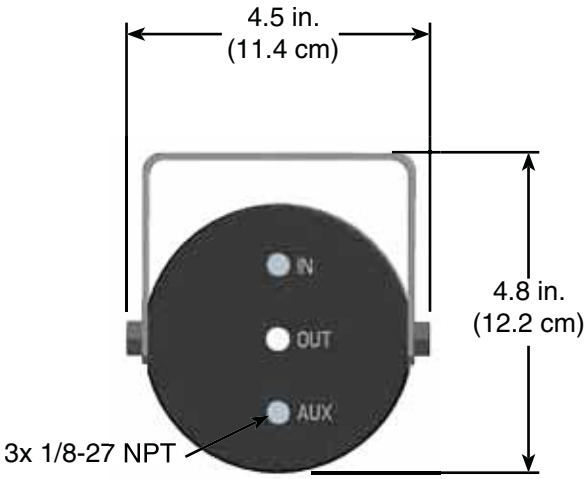

Top View

Questions? Contact Technical Support:
800 344 3286 or 209 521 7860 ext. 7555
e-mail: racortech@parker.com

LFS 801

Mounting Information

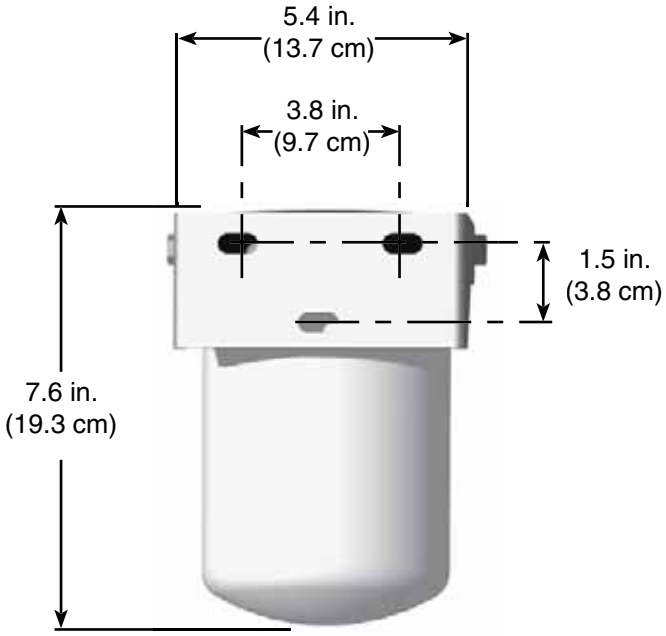

Back View

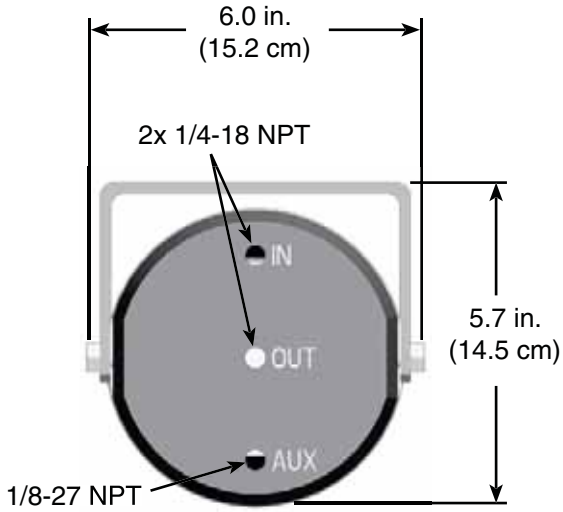

Top View

H

LFS 802

Mounting Information

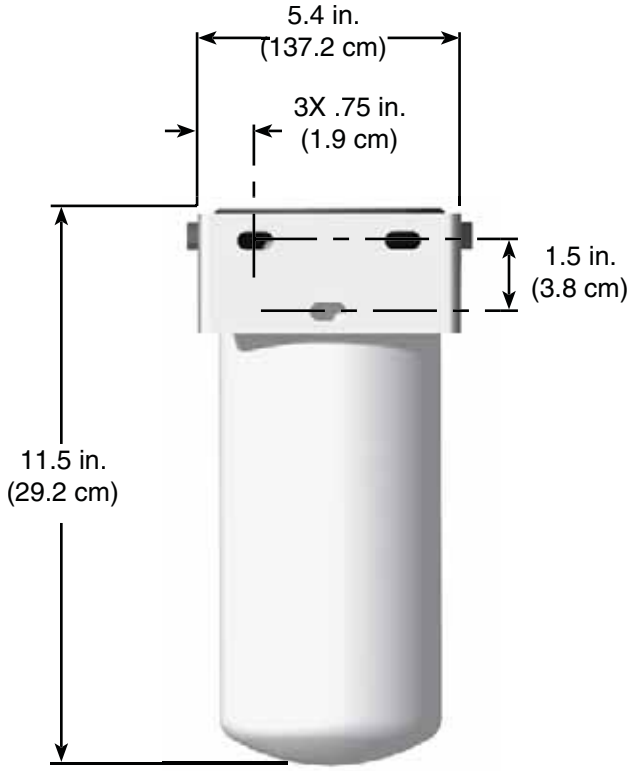

Back View

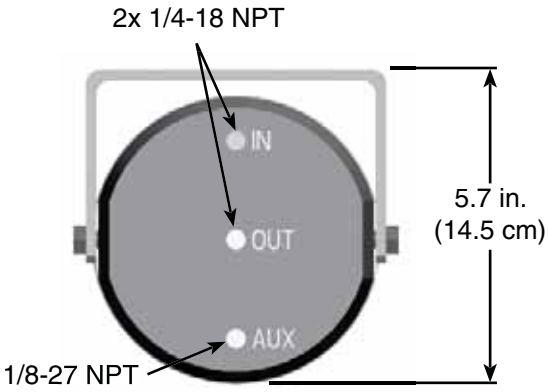

Top View

Questions? Contact Technical Support:
800 344 3286 or 209 521 7860 ext. 7555
e-mail: racortech@parker.com

LFS 802-S

Spin-on Filter

Mounting Information

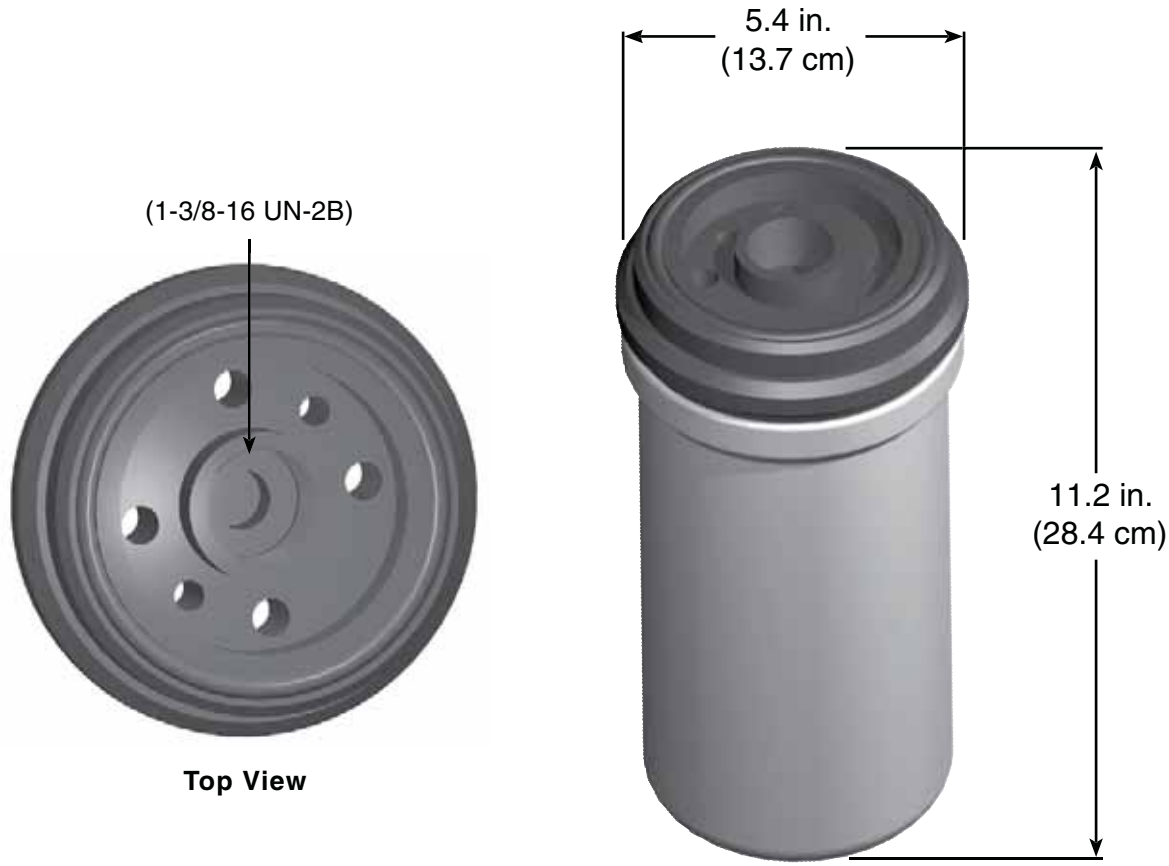

LFS 820

LFS 820 & LFS 825

Mounting Information

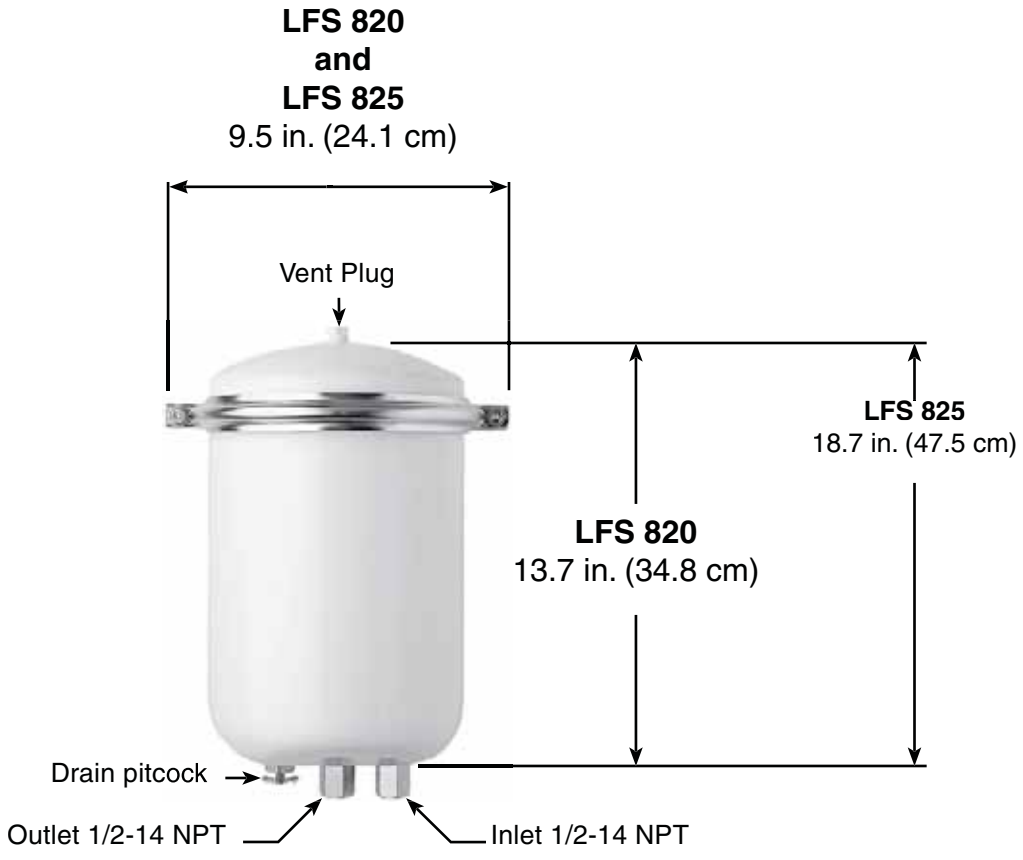

LFS 820 Shown

LFS 820

Bypass Filter

Test Data

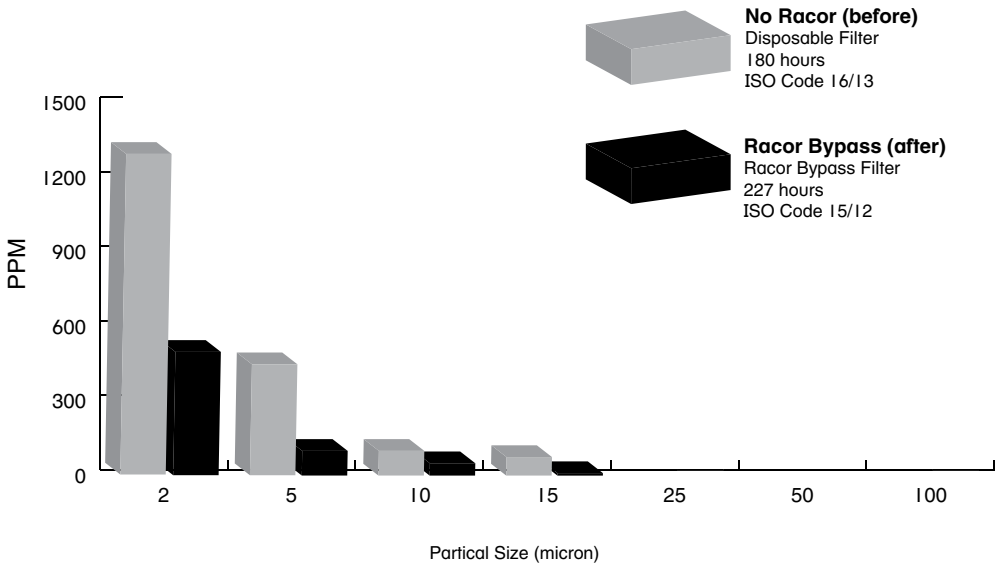

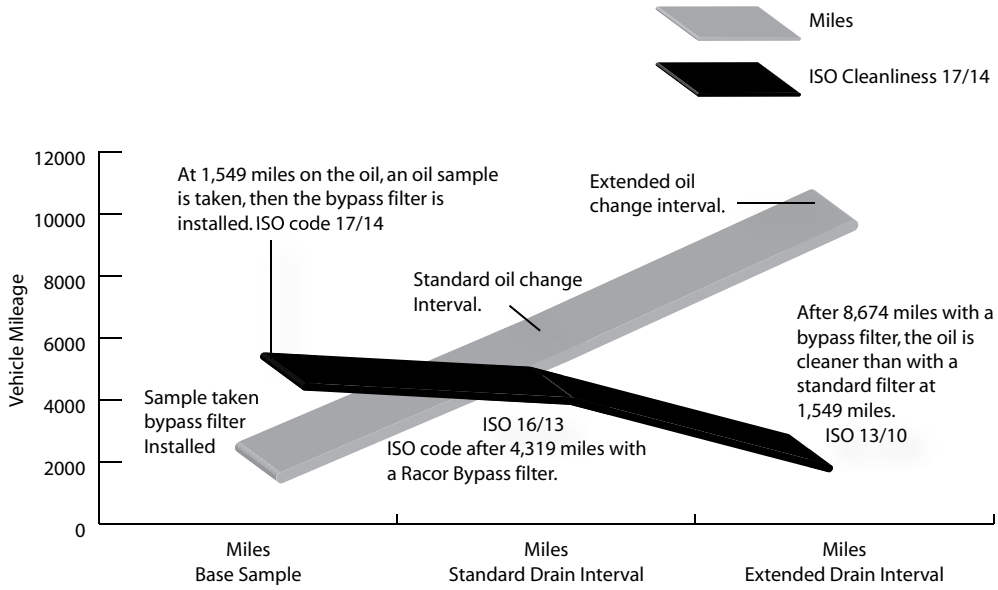

H

LFS 800A CID

Customer Interface Drawing

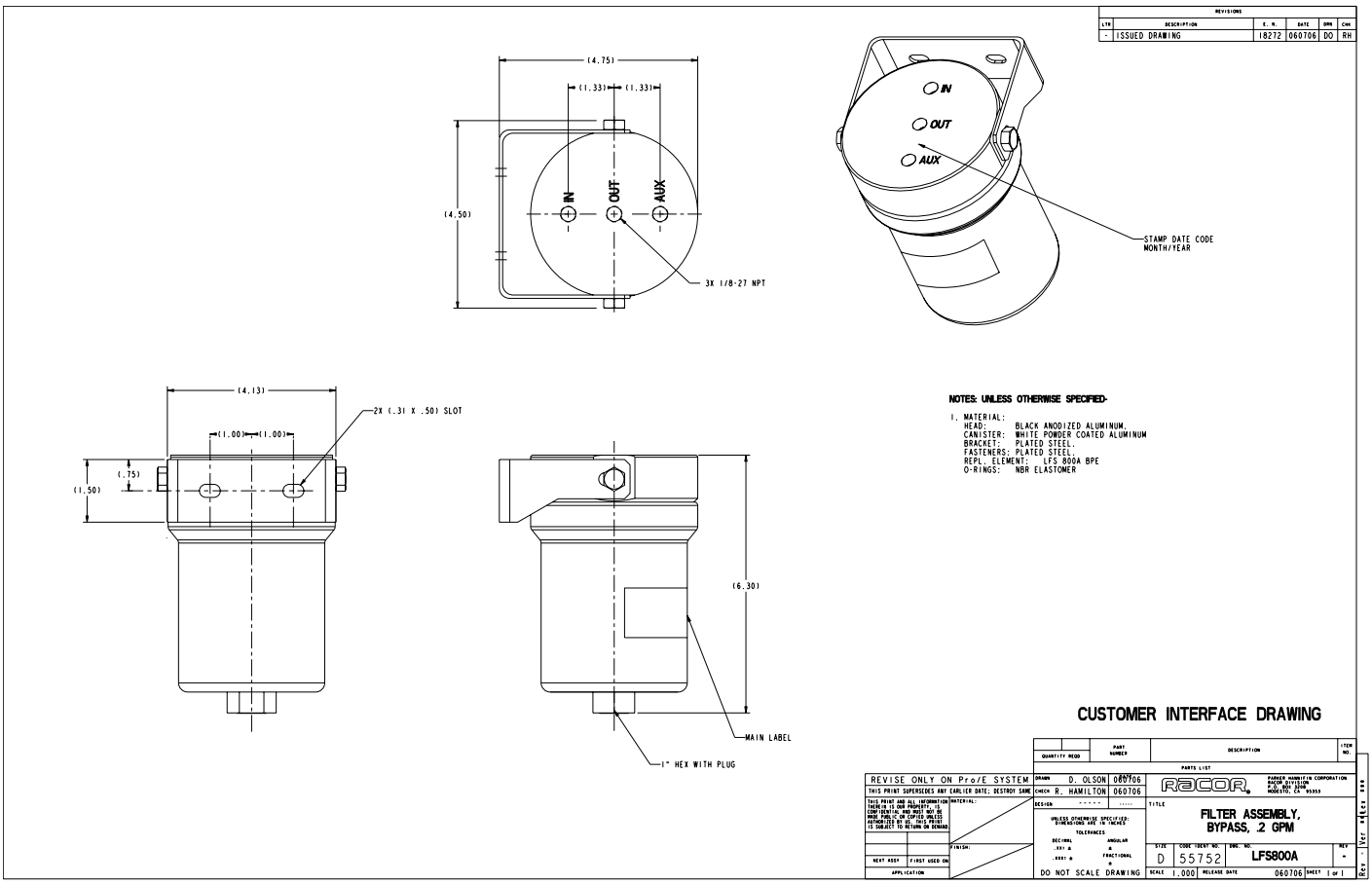

LFS 801 CID

Customer Interface Drawing

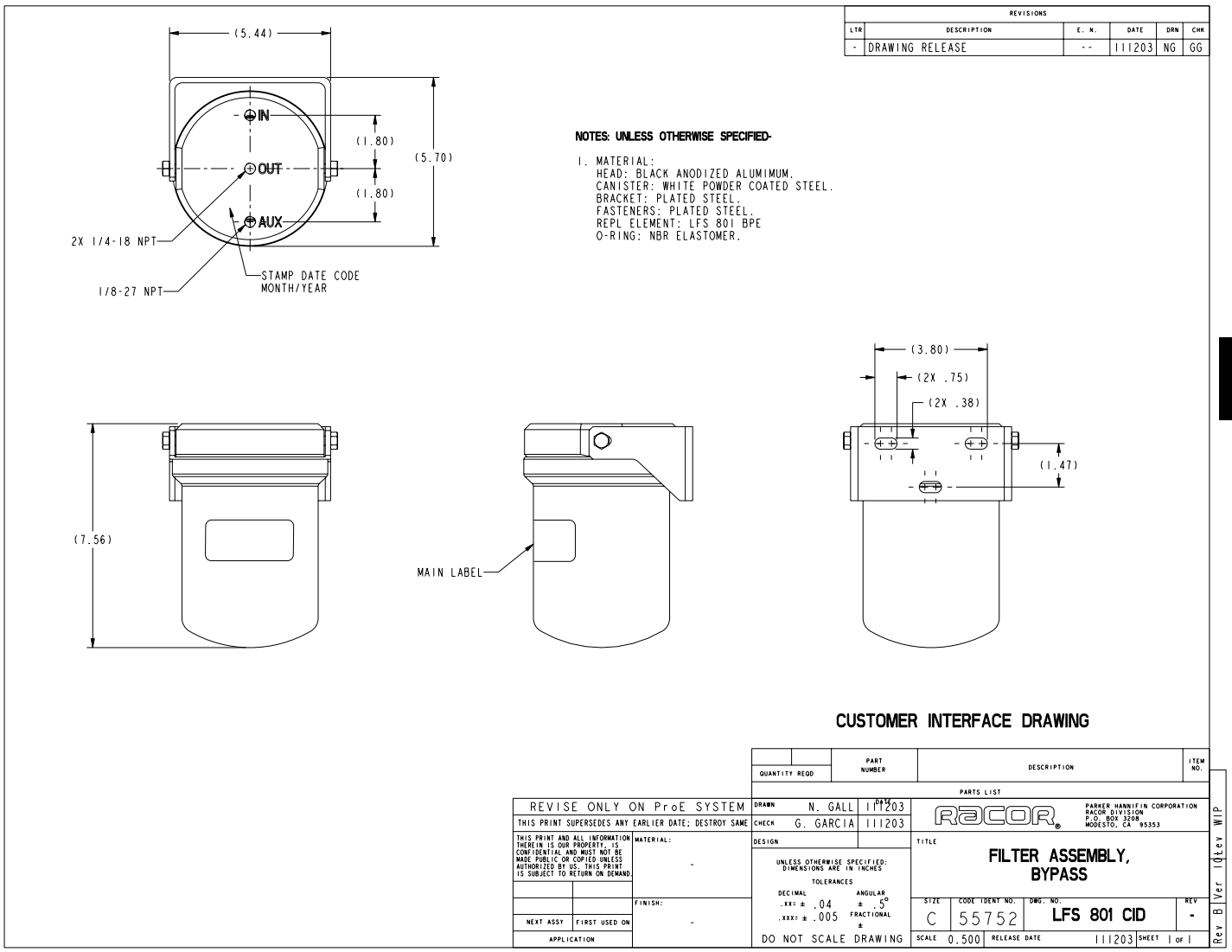

Questions? Contact Technical Support:
800 344 3286 or 209 521 7860 ext. 7555
e-mail: racortech@parker.com

Parker Racor

LFS 802 CID

Customer Interface Drawing

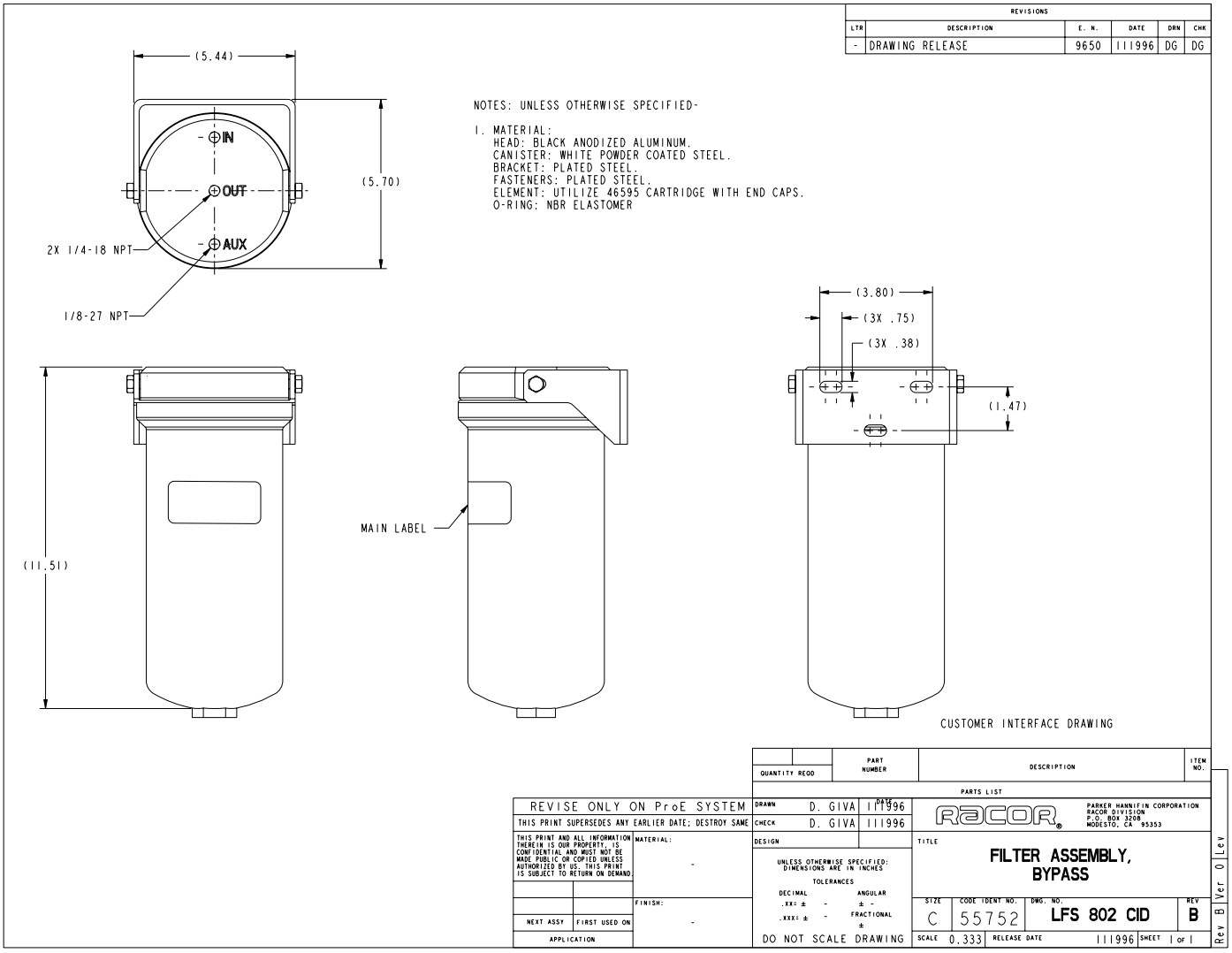

Questions? Contact Technical Support:
800 344 3286 or 209 521 7860 ext. 7555
e-mail: racortech@parker.com

Bypass Kits

The Racor Bypass Oil Series removes dirt, varnish, ash, tar, soot and other contaminants that full-flow filters cannot remove from your engine's oil and hydraulic systems. The system also removes moisture, which forms component-damaging acids if left in the oil. The Racor Bypass Oil Series removes 99.0% of damaging contaminants to minimize wear and extends engine component life. The polishing effect of the Racor Bypass Oil Series and the use of the Racor Oil Analysis system will allow the engine oil or hydraulic fluid service intervals to be extended. By reducing the disposal of waste oil, the system also contributes to preserving the environment.

Bypass Oil Series Benefits

- **Extends the miles between oil changes**
- **Saves maintenance costs and downtime**
- **Keeps oil cleaner longer, reducing oil consumption and disposal**
- **Extends engine life and "re-build" intervals**
- **Keeps engines better lubricated which means reduced wear**
- **Removes damaging water**

LFS RK873F Shown

LFS Kits

(GM Duramax 6.6L)
LFS RK866G

(Ford 7.3L)
LFS RK873F

(Dodge/Cummins 5.9L)
LFS RK859CL

(Dodge/Cummins 5.9L)
LFS RK859CEB

(Ford/International 6.0L)
LFS RK860F

(Ford Econoline Van)
LFS RK860FE

(Dodge/Cummins 5.9L)
LFS RK859CEA

Bypass Kits

Bypass Kits Overview

Part Number	Application	Year Model
LFS RK859CEA	Dodge/Cummins 5.9L	1993-2002 Drain Plug Return
LFS RK859CEB	Dodge/Cummins 5.9L	1994-2001 Drain Plug Return
LFS RK859CL	Dodge/Cummins 5.9L	1998 ½-Current Filter Cap Return
LFS RK866G	GM Duramax 6.6L	All Models
LFS RK860F	Ford 6.0L	2003-Current
LFS RK860FE	Ford 6 cylinder	Econoline Van
LFS RK873F	Ford 7.3L DI & IDI Engine	1987-2003

Hose and Fitting Kits

Remote bypass oil filter kits come complete with hose, adapters and all required fittings for a simple installation. The filter is mounted at any angle, using the supplied heavy duty bracket. The oil supply is taken from the engine by means of the unique machined and anodized components. The oil is returned to the crankcase by the filter cap or drain plug adapter.

LFS RK801BHK

Hose and fittings kit for:

LFS RK859CL

LFS RK860F

LFS RK866G

LFS RK800BHK

Hose and fittings kit for:

LFS RK859CEA

LFS RK859CEB

LFS RK873F

Questions? Contact Technical Support:
800 344 3286 or 209 521 7860 ext. 7555
e-mail: racortech@parker.com

Bypass Kits

Installation

LFS RK866G
GM Duramax 6.6L

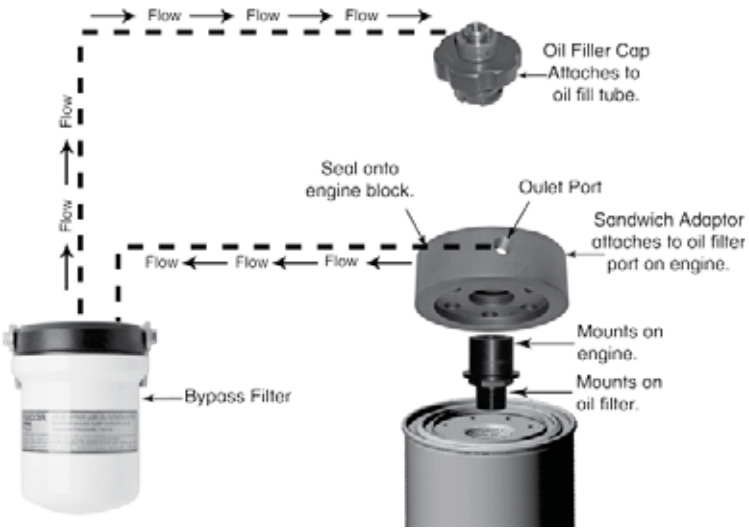

LFS RK860F
Ford/International 6.0L

LFS RK860FE
Ford Econoline Van

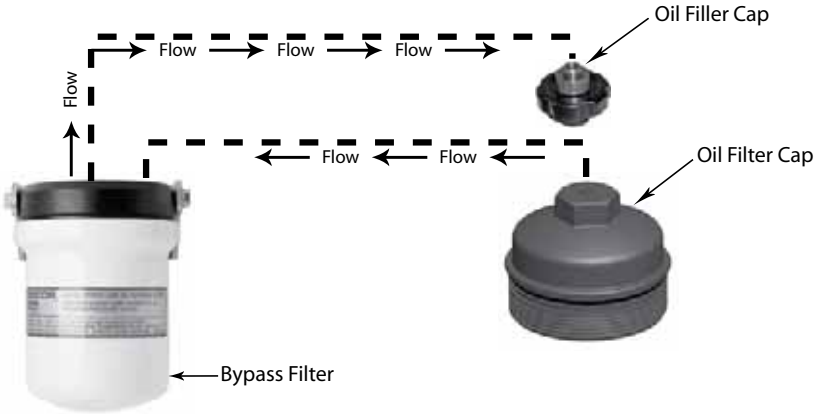

H

Bypass Kits

Installation

LFS RK873F
Ford 7.3L DI and IDI Engine

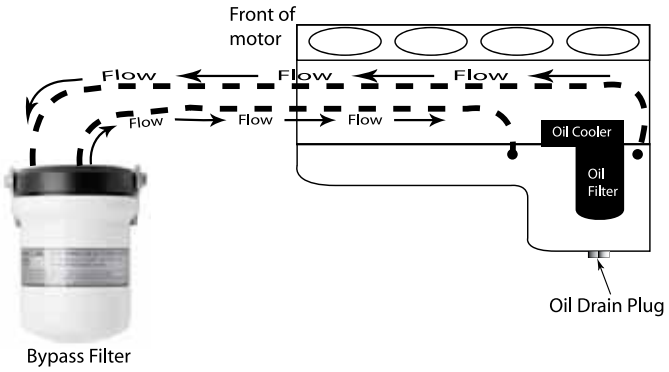

LFS RK859CEA & CEB
Dodge/Cummins 5.9L

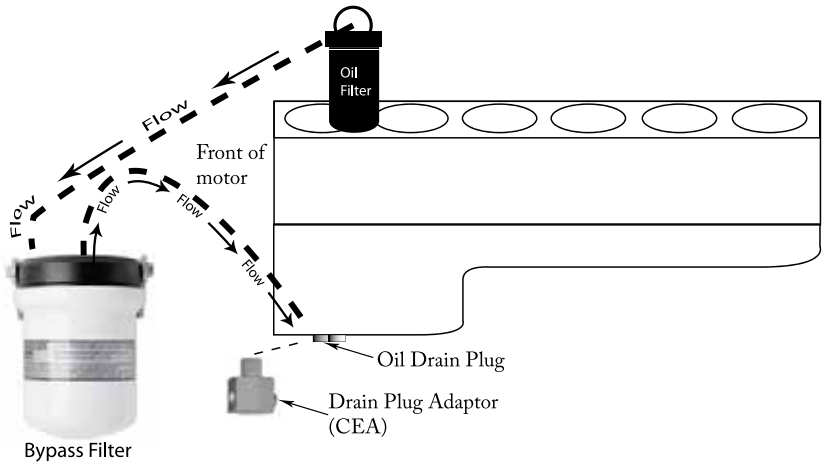

LFS RK859CL
Dodge/Cummins 5.9L

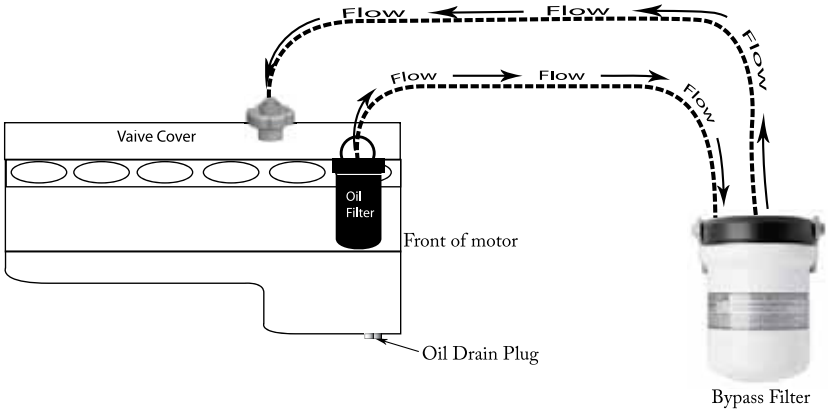

Questions? Contact Technical Support:
800 344 3286 or 209 521 7860 ext. 7555
e-mail: racortech@parker.com

DOC System *(Discontinued)*

DOC19P

DOC19P is a patented maintenance systems that automatically changes the oil as the engine is running. DOC19P systematically removes small amounts of oil from the engine, blends it into the return fuel line and burns it as fuel - in a simple, efficient closed loop system to keep your vehicle out of maintenance shop and on the job. Saves time and fuel costs.

The DOC19P incorporates Racor's proven gravity based Never Lo oil replenishing system to continuously replace the oil withdrawn from the engine and burned by the action of the DOC19P for the ultimate in hands off maintenance. The DOC19P pays for itself in less than a year of average use.

DOC System *(Discontinued)*

Replacement Parts

	Part Number	Description
1	**DOC19P**	Automatic Oil Change
2	**DOC20PORX**	Control Module
3	**DOC25CPOX**	Cylinder Assembly
4	**DOC22PO**	Top Solenoid Assembly
5	**DOC22PC**	Bottom Solenoid Assembly
6	**DOC28CTAOX**	Mounting Bracket

Additional Parts (not shown)

DOC45K	Assembly Fitting Kit
BK14150	Assembly Bolt Kit
1000152	Installation Instructions

CAUTION: This fitting contains a filter screen and removing the fitting will void the warranty.

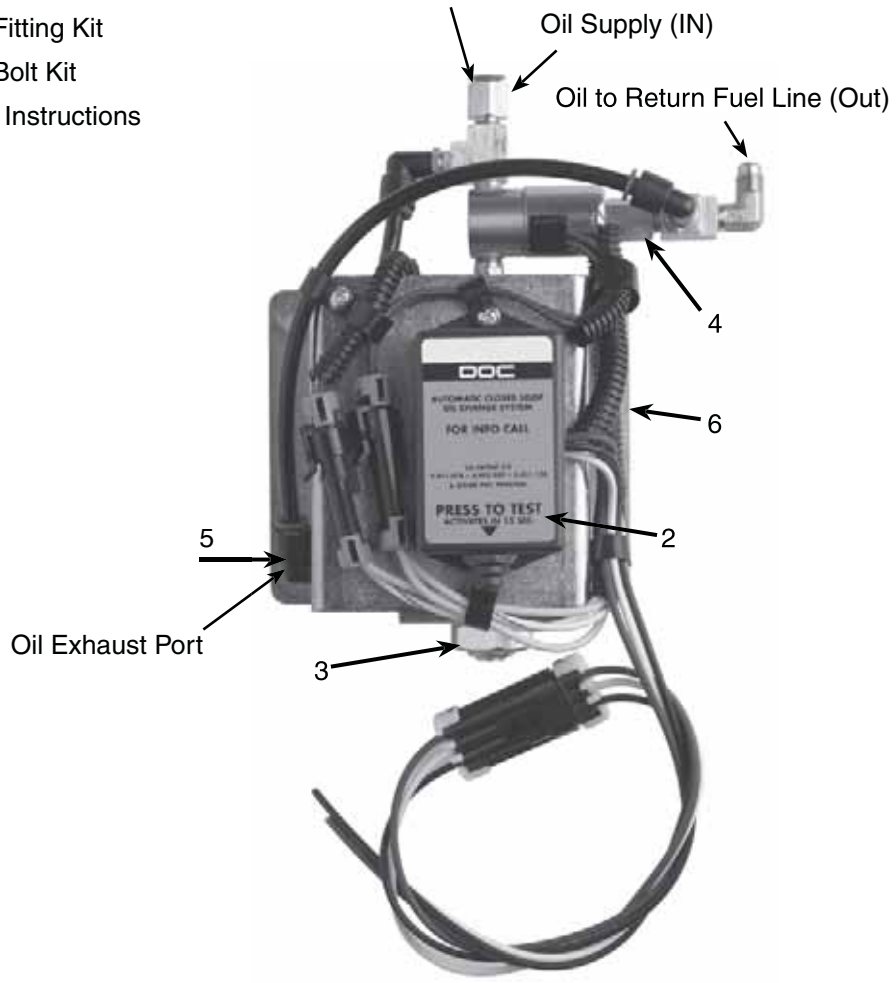

Questions? Contact Technical Support:
800 344 3286 or 209 521 7860 ext. 7555
e-mail: racortech@parker.com

Never Lo Replenishing System Overview

Replenishing System

The Never Lo Oil Replenishing System, automatic or manual, provides a constant supply of fresh clean oil to the engine.

- **The AFG Automatic Gravity System continuously monitors engine oil and automatically maintains engine oil at a pre-adjusted level. The system requires no electrical connections and is simple to install.**
- **The Push-Button Manual Pressurized Remote Fill Oil Replenishing System allows an operator to add oil to the engine by simply depressing a valve button until the desired amount of oil has been added.**
- **The amount of oil needed is determined by routine dipstick checking. The tank site gauge is calibrated at 2 quart intervals for easy make up.**
- **When used in conjunction with the DOC19P, the Never Lo Oil Replenishing System provides a automatic supply of fresh oil to the engine.**

AFG30R Kit

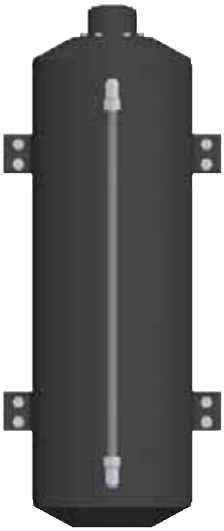

AFG50R Kit

2MP30R Kit

AFG30R Kit

Kit Includes

Part Number	Description	Quantity
3GV14X	Fill Cap Assembly	(1)
3NL52RX	Round Mounting Bracket	(2)
3NL52SX	Square Mounting Bracket	(2)
63PT-8-62	1/2˝ Hose Insert	(2)
N11-8ANG	1/2˝ Nylon Tubing	A/R
23005	Elbow, #8 Tube X 3/8˝	(2)
11078	Hex Head Capscrews 3/8˝ -16 X 1˝	(8)
11901	Hex Nut 3/8˝ -16 Self Locking	(8)
AFG10FK	Fitting Kit	(1)
AFG10FK	Universal Bracket	(1)
RKAFGSV12	Optional Solenoid Valve (12 vdc, normally closed, 1/4” NPT ports, 1/4” orifice) Mounting diagram shown in this section.	
REL1230LT	Relay	
AFG30R **AFG30RSV**	Round Reservoir (3 gallon) 3 Gallon With Solenoid Valve	
AFG34ST	Sight Glass (for 3 gallon unit)	
2104-4-6	90° Elbow Fitting (1/4” NPT by 3/8” male)	(2)
0104-4-6	Straight Fitting (1/4” NPT by 3/8” male)	(2)
3NL4469A	Sensing Chamber	
0104-6-6	Straight fitting (3/8” NPT by 3/8” male)	(1)
145F-6-6	Tee Fitting (3/8” NPT by 3/8” male)	(1)
3NL70LT	Oil Sensor Assembly	

Note: Not all part numbers are available individually.

Questions? Contact Technical Support:
800 344 3286 or 209 521 7860 ext. 7555
e-mail: racortech@parker.com

AFG30R Kit

Mounting Information

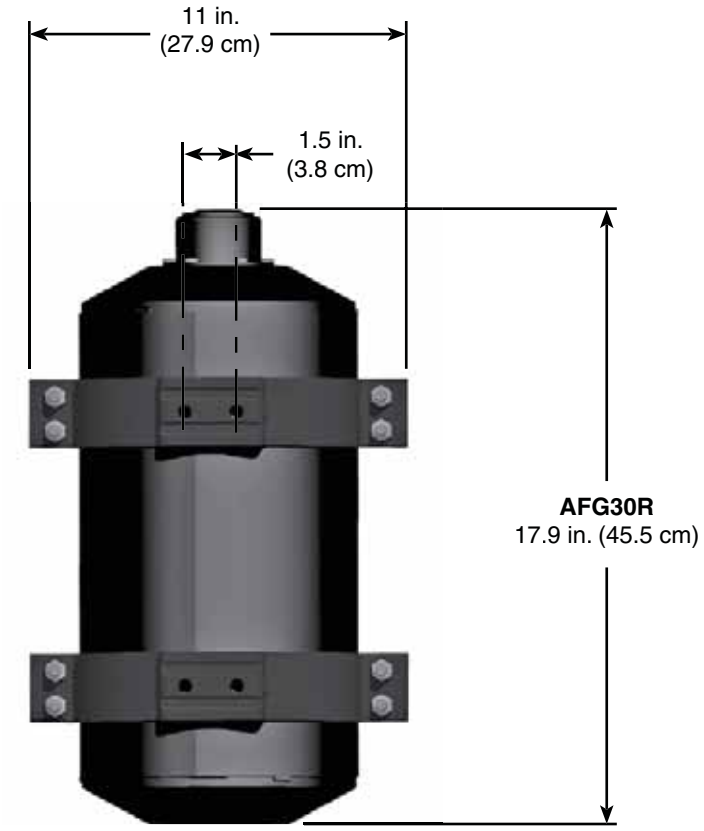

AFG30R Back View

AFG50R Kit

Kit Includes

Part Number	Description	Quantity
3GV14X	Fill Cap Assembly	(1)
3NL52RX	Round Mounting Bracket	(2)
3NL52SX	Square Mounting Bracket	(2)
63PT-8-62	1/2″ Hose Insert	(2)
N11-8ANG	1/2″ Nylon Tubing	A/R
23005	Elbow, #8 Tube X 3/8″	(2)
11078	Hex Head Capscrews 3/8″ -16 X 1″	(8)
11901	Hex Nut 3/8″ -16 Self Locking	(8)
AFG10FK	Fitting Kit	(1)
AFG10FK	Universal Bracket	(1)
RKAFGSV12	Optional Solenoid Valve (12 vdc, normally closed, 1/4” NPT ports, 1/4” orifice) Mounting diagram shown in this section.	
REL1230LT	Relay	
AFG50R **AFG50RSV**	Round Reservoir (5 gallon) 5 Gallon With Solenoid Valve	
2104-4-6	90° Elbow Fitting (1/4” NPT by 3/8” male)	(2)
0104-4-6	Straight Fitting (1/4” NPT by 3/8” male)	(2)
3NL4469A	Sensing Chamber	
0104-6-6	Straight fitting (3/8” NPT by 3/8” male)	(1)
145F-6-6	Tee Fitting (3/8” NPT by 3/8” male)	(1)
3NL70LT	Oil Sensor Assembly	

Note: Not all part numbers are available individually.

Questions? Contact Technical Support:
800 344 3286 or 209 521 7860 ext. 7555
e-mail: racortech@parker.com

AFG50R Kit

Mounting Information

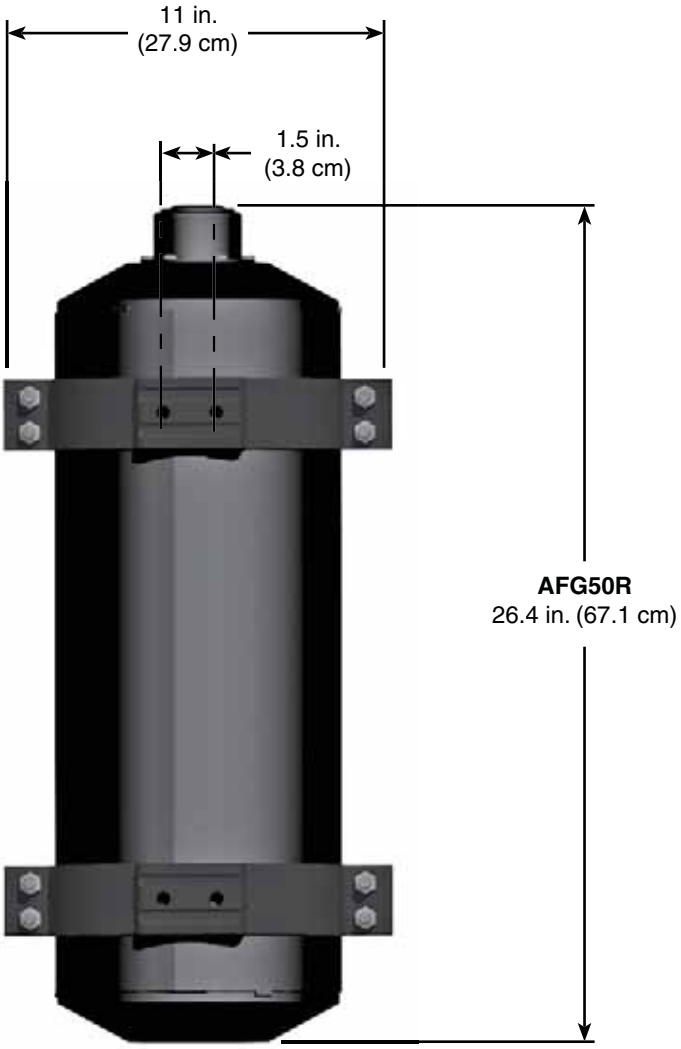

AFG50R Back View

RKAFGV12 Kit

Kit Includes

Part Number	Description	Quantity
0104-4-8	1/4″ Adapter Pipe to #8 Hose	(2)
0104-6-6	3/8″ Adapter Pipe to #6 Hose	(1)
23063	3/8″ Tee Pipe to #8 Hose	(1)
REL1230LT	Relay Assembly	(1)
23060	12 vdc Solenoid Valve Assembly	(1)
23059	Mounting Bracket	(1)
3NL4469A	Sensing Chamber	(1)
3NL70LT	Oil Sensor Assembly	(1)
23061	REL1230LT Mating Harness	(1)
23024	10-32 x 1/2″ Capscrew	(2)
11841	5/16″-18 Selflocking Hex Nut	(2)

Note: Not all part numbers are available individually.

Questions? Contact Technical Support:
800 344 3286 or 209 521 7860 ext. 7555
e-mail: racortech@parker.com

RKAFGV12 Kit

Electronic AFG30R and AFG50R Units

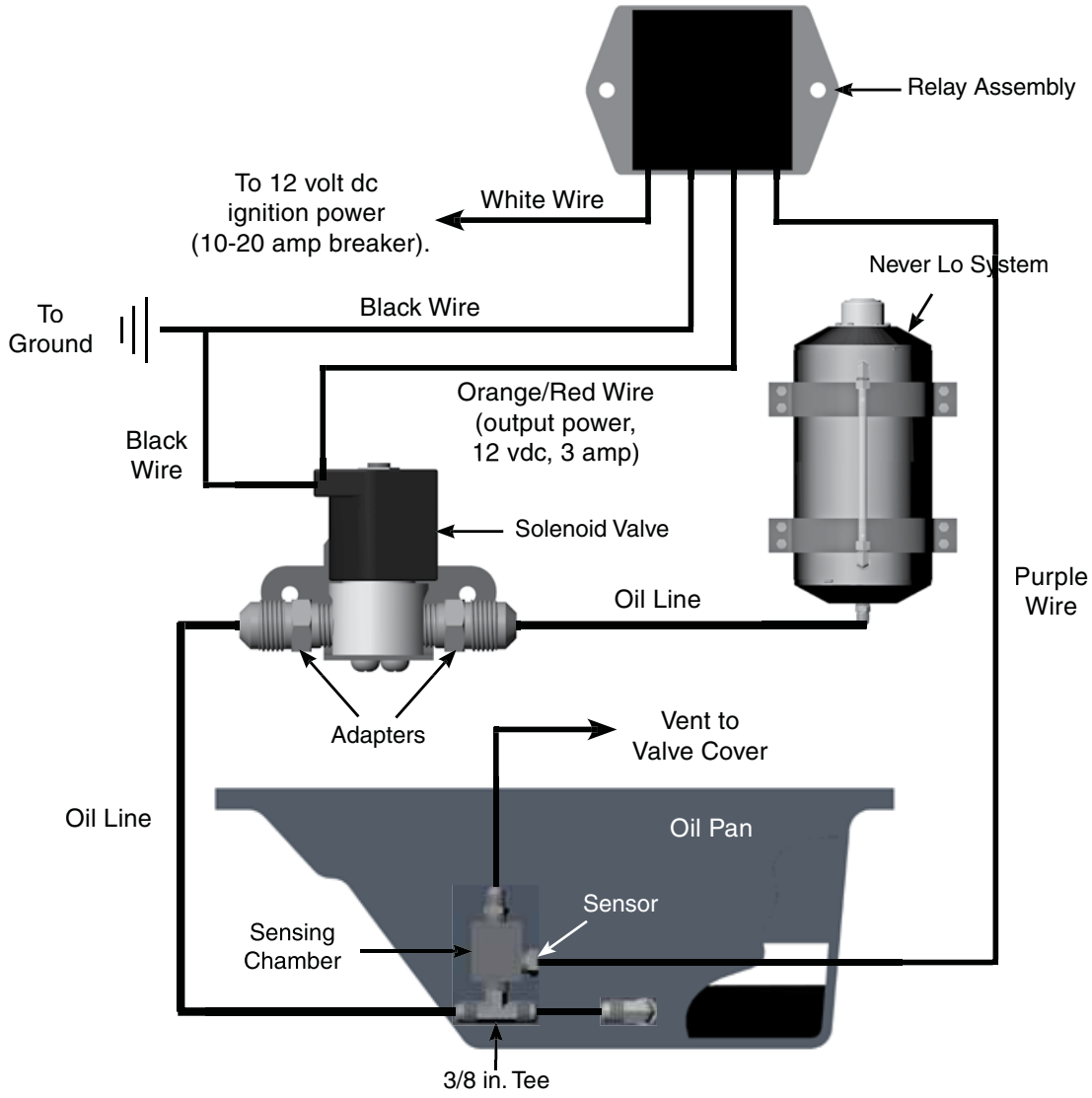

H

2MP30R Pressurized Kit

Kit Includes

Part Number	Description	Quantity
2MP51UX	3 Gallon Pressurized Tank	(1)
3NL56UX	Tank Cap	
23006	Filler Cap O-ring	
2MP988LX	Left Side Sight Guard	
2MP988RX	Right Side Sight Gaurd	(1)
3NL52RX	Round Mounting Bracket	(1)
3NL52SX	Square Mounting Bracket	(1)
23005	Elbow, #8 Tube x 3/8˝ NPT male	(2)
11901	Hex Nut 3/8˝-16 Self Locking	(8)
11078	Capscrew 3/8˝-16 x 1˝ Long	(8)
23021	Capscrew 1/4˝-20 x 3/8˝	(4)
N11-8ANG	1/2˝ Nylon Tubing	
3MP9400X	Double Valve Push Button	(1)

Note: Not all part numbers shown are available individually.

Mounting Information

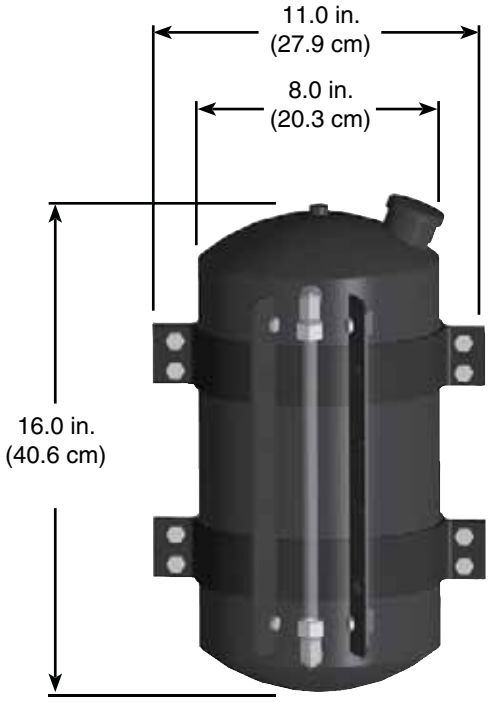

2MP30R

Questions? Contact Technical Support:
800 344 3286 or 209 521 7860 ext. 7555
e-mail: racortech@parker.com

2MP30R Pressurized Kit

Pressure AFG System

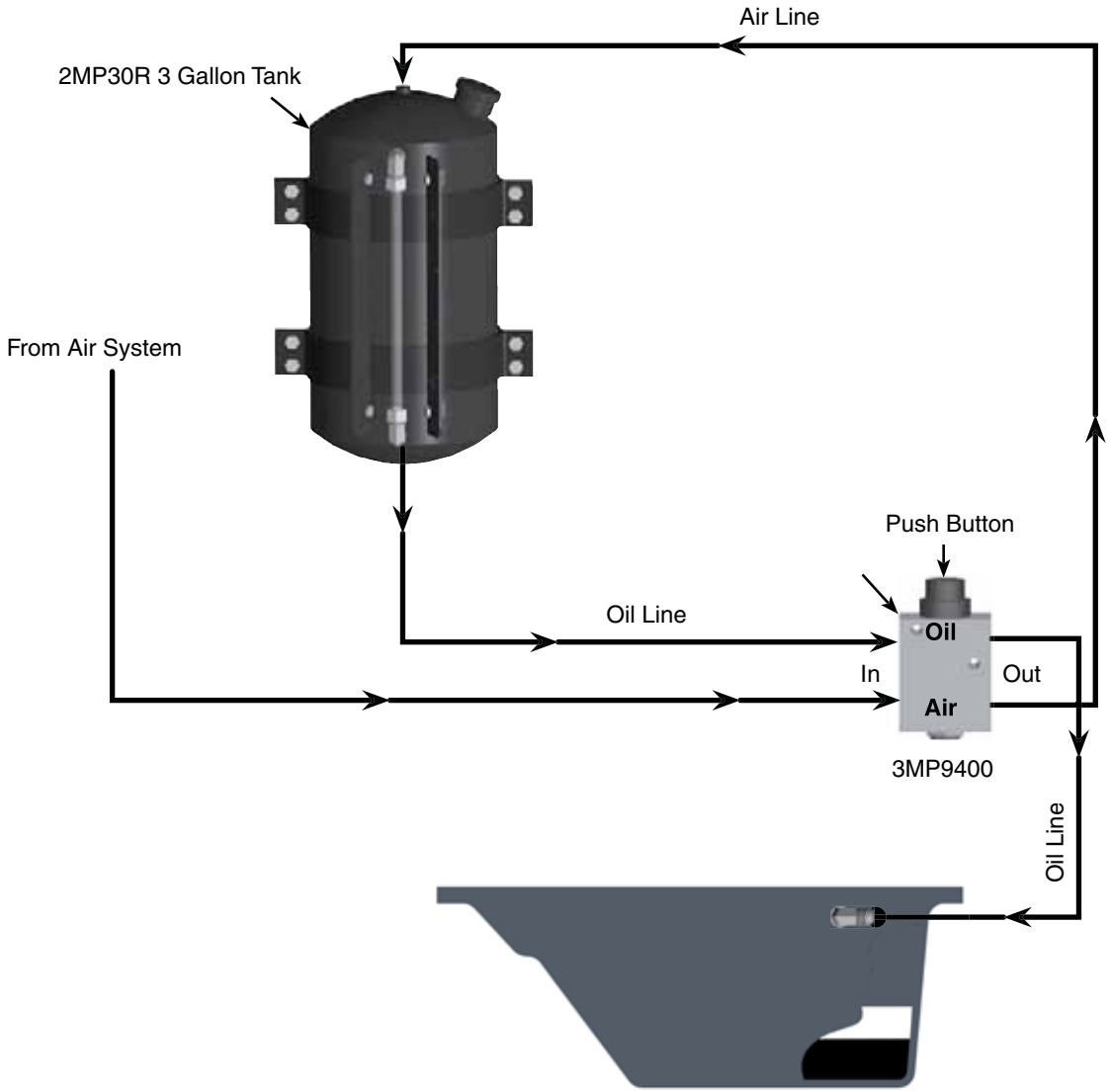

ABS Series Bypass Oil Cleaners

Racor Absolute Oil Cleaner Plays an Active Part in Every Engine Application

ABS10300

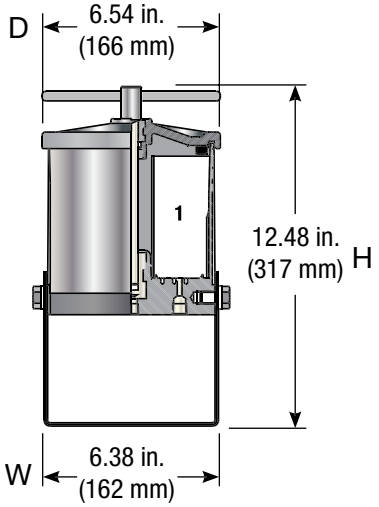

ABS10450

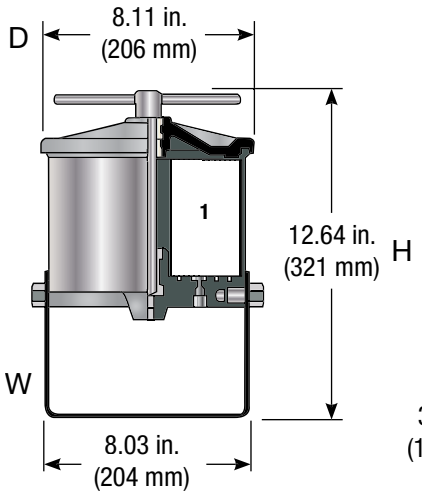

Specifications	ABS10300	ABS10450
Maximum Pressure	180 PSI (12.4 bar)	180 PSI (12.4 bar)
Capacity	30 qts (28 L)	50 qts (47 L)
Port Size (inlet/outlet)	1/4" NPTF	1/4" NPTF
Dimensions	W6.38 x D6.54 x H12.48 in. (W162 x D166 x H317 mm)	W8.03 x D8.11 x H12.64 in. (W204 x D206 x H321 mm)
Weight	10 lbs (4.5 kg)	15 lbs (6.8 kg)

Replacement Parts List

ABS44030	Seal Service Kit (for ABS10300)
ABS44045	Seal Service Kit (for ABS10450)
ABS45165	Bracket (for ABS10300)
ABS45155	Bracket (for ABS10450)
ABS45336	T-handle (for ABS10300)
ABS45346	T-handle (for ABS10450)

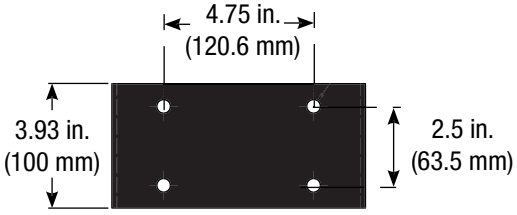

Mounting Bracket Bolt Pattern

Replacement Filters

ABS10300 ***ABS20330*** ***ABS20370*** ***ABS25350***	3 micron filter (Green) 5 micron filter (Blue) 10 micron filter (Orange)
ABS10450 ***ABS20430*** ***ABS20470*** ***ABS25450***	3 micron filter (Green) 5 micron filter (Blue) 10 micron filter (Orange)

Questions? Contact Technical Support:
800 344 3286 or 209 521 7860 ext. 7555
e-mail: racortech@parker.com

ABS Series Bypass Oil Cleaners

SU Series

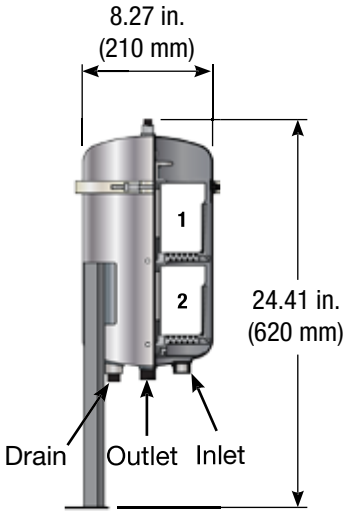

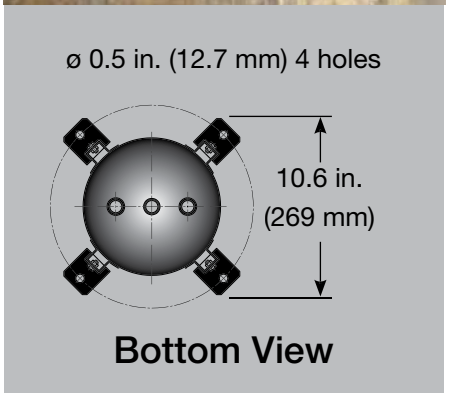

H

Specifications	ABS11200
Housing Material	Stainless Steel
Capacity	100 qt (94.6 L)
Port Size (inlet/outlet/drain)	1/2” NPT
Working Pressure	<120 PSI (8.3 bar)
Dimensions	W9.3 x D10.6 x H16.1 in. (W210 x D269 x H620 mm)
Replacement Filters	(use two) ABS20430 (3 micron), ABS20470 (5 micron) ABS25450 (10 micron)
Weight	22 lbs (10.0 kg)

Replacement Parts

ABS44090	Seal Service Kit
ABS50030	V-band Kit
ABS50068	Nut and Bolt Kit
ABS50070	Packing
ABS50057	O-ring

Questions? Contact Technical Support:
800 344 3286 or 209 521 7860 ext. 7555
e-mail: racortech@parker.com

Parker Racor

ABS Series Bypass Oil Cleaners

SU Series

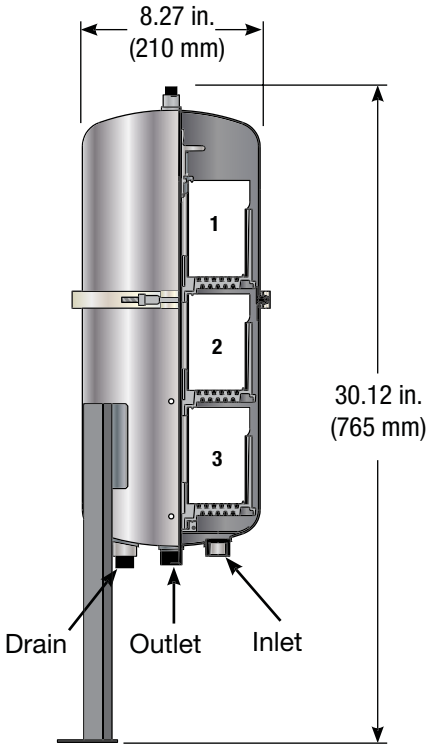

Specifications	ABS11300
Housing Material	Stainless Steel
Capacity	150 qt (142.0 L)
Port Size (inlet/outlet/drain)	1/2” NPT
Working Pressure	<120 PSI (8.3 bar)
Dimensions	W9.3 x D10.6 x H30.0 in. (W236 x D269 x H762 mm)
Replacement Filters	(use three) ABS20430 (3 micron), ABS20470 (5 micron), ABS25450 (10 micron)
Weight	28.7 lbs (13.0 kg)

Replacement Parts

ABS44090	Seal Service Kit
ABS50030	V-band Kit
ABS50070	Packing
ABS50057	O-ring

Questions? Contact Technical Support:
800 344 3286 or 209 521 7860 ext. 7555
e-mail: racortech@parker.com

ABS Series Bypass Oil Cleaners

SS Series

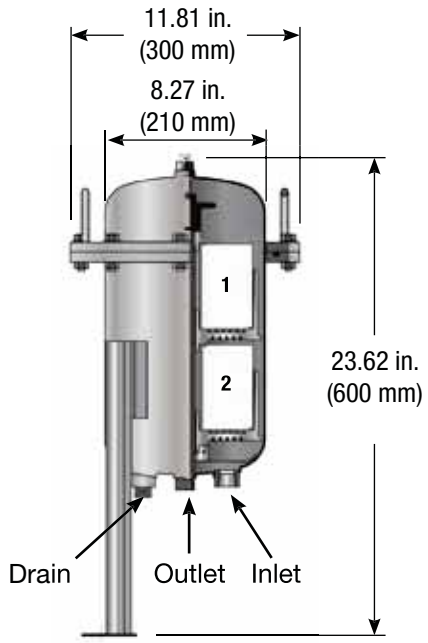

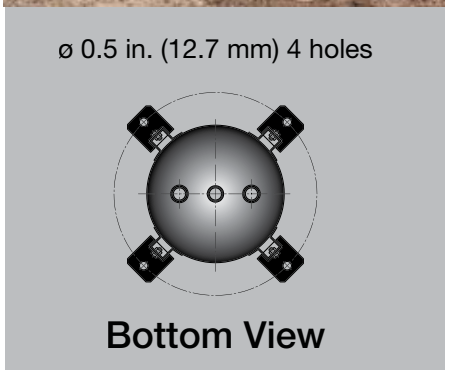

Specifications	ABS11400
Housing Material	Carbon Steel
Capacity	100 qt (94.6 L)
Port Size (inlet/outlet/drain)	1/2" NPTF
Working Pressure	<72.5 PSI (5.0 bar)
Dimensions	W11.81 x H23.62 in. (W300 x H600 mm)
Replacement Filters	(use two) ABS20430 (3 micron), ABS20480 (5 micron) ABS25450 (10 micron)
Weight	40 lbs (18.1 kg)

Replacement Parts

ABS44080	Seal Service Kit
ABS50082	O-ring Kit
ABS50072	Packing Spacer
ABS50065	Suppression Nut

Questions? Contact Technical Support:
800 344 3286 or 209 521 7860 ext. 7555
e-mail: racortech@parker.com

ABS Series Bypass Oil Cleaners

SS Series

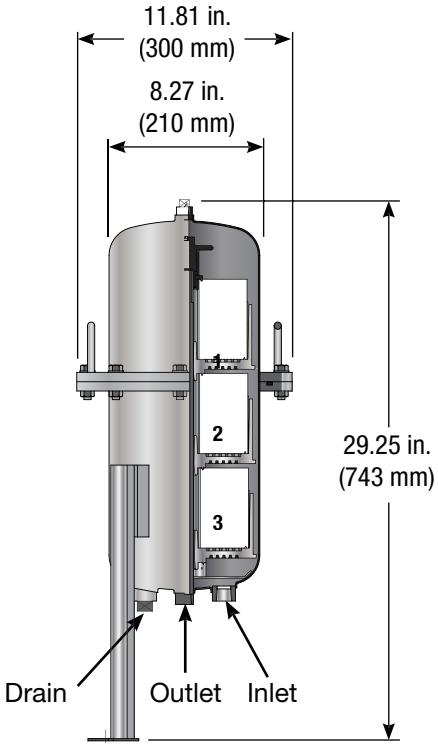

Specifications	ABS11410
Housing Material	Carbon Steel
Capacity	150 qt (142.0 L)
Port Size (inlet/outlet/drain)	1/2" NPTF
Working Pressure	<72.5 PSI (5.0 bar)
Dimensions	W11.81 x H29.25 in. (W300 x H743 mm)
Replacement Filters	(use three) ABS24030 (3 micron) ABS20490 (5 micron), ABS25450 (10 micron)
Weight	48.5 lbs (22 kg)

Replacement Parts

ABS44080	Seal Service Kit
ABS50082	O-ring Kit
ABS50072	Packing Kit
ABS50068	Bolt and Nut Kit

Questions? Contact Technical Support:
800 344 3286 or 209 521 7860 ext. 7555
e-mail: racortech@parker.com

ABS Series Bypass Oil Cleaners

SS Series

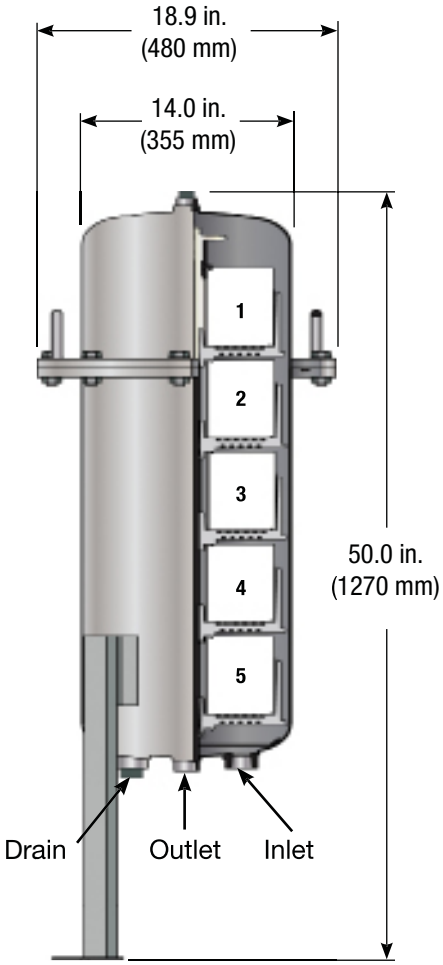

H

Specifications	ABS10515
Housing Material	Carbon Steel
Capacity	250 qt (236.6 L)
Port Size (inlet/outlet/drain)	1/2” NPTF
Working Pressure	<72.5 PSI (5.0 bar)
Dimensions	W18.9 x H50.0 in. (W480 x H1270 mm)
Replacement Filters	(use five) ABS20515 (3 micron)
Weight	191 lbs (86.6 kg)

Replacement Parts

ABS44080	Seal Service Kit
ABS50058	O-ring Kit

ABS Series Bypass Oil Cleaners

Replacement Filters

Absolute Micron

Racor ABS filters are based on the axial flow principle and combines micro and depth filtration. This setup forces the oil to pass 8.5 oz (250 ml) of cellulose material, and to pass through 3 stages of different density, offering the best filter purification possible.

1. **Big particles are retained on top of the filter, smaller particles (100 to10 micron) in the 1st stage and the smallest particles in the lower compressed part of the filter (<10 micron).**
2. **The cellulose filter material allows water absorption up to 8.6 oz (255 ml) by filter.**
3. **The combination of a special cellulose material with a long flow distance 4.5 in. (114 mm) through the filter results in the ABS unique ability to remove sludge and oxidation products. Our filter products are perfect for any industrial or manufacturing use. Our filter purification process has helped earn our reputation in the industry.**

Important: note that all our filter have passed the official Multipass test to ISO 4572. It is the only world-wide accepted test to define filter purification, efficiency and to publish absolute micron ratings and BETA-ratio's!

3-Step Micro Filtration

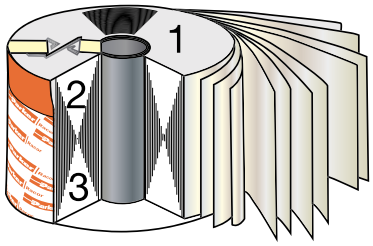

Axial filtration combined with special cellulose industrial filter materials.

1. **Solid particle filtration.**
2. **Water absorption.**
3. **Sludge, resin and oxidation products absorption.**

- **Mining**
- **Off Highway**
- **Marine**
- **Locomotives**
- **Construction**
- **Mobile**

Product Selection Guide

Engine Sump Capacity	Model
Up to 30 qt (28.4 L)	ABS10300
Up to 50 qt (47.3 Liters)	ABS10450
*Up to 100 qt (94.6 L)***	ABS11200 / ABS11400
Up to 150 qt (142.0 L)	ABS11410 / ABS11300
Up to 250 qt (236.6 L)	ABS10515

****Note:** Long life filters last 40% longer and are available upon request.

Disclaimer: Product selection guide is for reference only — filter selection may very depending on application.

Axial Micro Filter

The Racor ABS oil cleaner micro filters are based on operating principles that differ from those for conventional oil filters.

The design of these filters is based on the axial flow principle whereby a filter mass of 114 mm is applied. This is an enormous difference in comparison with the 1 to 2 mm thickness of conventional circulation filters. These 114 mm thick filters are always installed in a bypass position and this ensures that pressure and flow pulses are avoided.

Cellulose Filter Media

In addition, Racor ABS filters use a specially designed cellulose filter medium that makes it possible to absorb water from oil and to completely remove oxidation products.

The Perfect Filter

Extra thick filter mass, specifically designed cellulose media, and bypass installation are key criteria for high dirt retention capacity. Use Racor Absolute Series oil cleaners for maximum dirt and water removing efficiency.

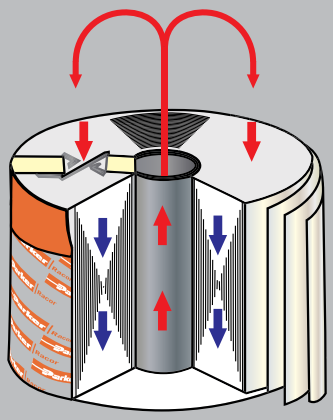

Questions? Contact Technical Support:
800 344 3286 or 209 521 7860 ext. 7555
e-mail: racortech@parker.com

ABS Series Bypass Oil Cleaners

Filter Condition

Check Engine Condition By Viewing Filter

Filter change cycle depends on equipment use and environmental conditions. To maintain oil cleanliness level to within manufactures recommendations, change filter whenever hours or distance driven is within oil drain interval. X series filters will last up to 40% longer so intervals should be adjusted to reflect longer filter life.

NOTE: Always use engine oil analysis to monitor the condition of the engine and lube oil when extending oil drain intervals.

1. **When filter functions normally: There is a slight amount of carbon, based on this visual inspection, the filter is being changed appropriately and there is no engine trouble.**
2. **When metallic particles are found on the surface it is an indication of engine wear occurring due to metal to metal contact. Further monitoring or inspection is necessary.**
3. **A filter with visual cracks in the media are an indication of coolant or excessive moisture in the engine. Further inspection or monitoring is necessary to prevent severe engine damage.**
4. **Large amounts of soot or carbon build up are an indication of long idle times, poor engine combustion, over heating, moisture causing high viscosity or over extension of the oil change interval.**

H

Selection Guide of Units Required

Based on Pentane Solubles.

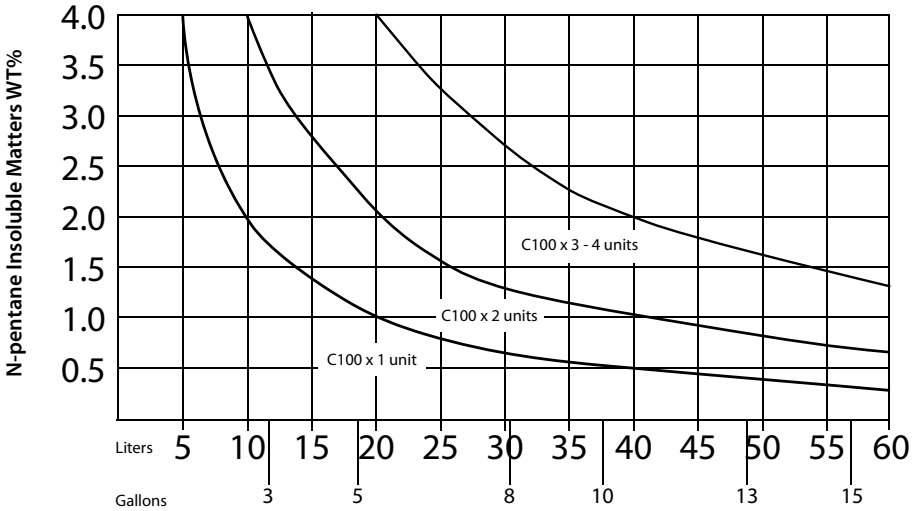

LFS RK760
Lube Oil Analysis Kit
Spectrochemical Analysis of up to 22 Trace Elements

Time Frame: 3 to 11 days, web page reporting is available.

Questions? Contact Technical Support:
800 344 3286 or 209 521 7860 ext. 7555
e-mail: racortech@parker.com

Parker Racor

Testing and Analysis

Sootcheck™

LFS RK763

SootChek™ is a hand held, battery operated diagnostic tool that tests soot concentration levels in diesel engine lubricating oil up to 10%, without sample preparation or solvents. It has been specifically designed for fleet operators, transit authorities, service stations, construction sites, preventative maintenance personnel, or anyone that needs easy, on-site soot measurements to enable them to know exactly when to change the lubricating oil based on soot analysis.

Oilcheck™

LFS RK761

OilChek™ Portable oil monitor measures the effect of all the contaminants and chemicals that occur in synthetic and petroleum based oils. This is achieved by detecting and measuring the oil's dielectric constant.

By comparing the measurements obtained from used and unused oils of the same make and grade, the oil monitor is able to determine the degree of change in the oil's dielectric constant. Dielectric change is directly related to the contamination level and degradation of the oil and may allow the user to achieve longer intervals between oil changes and immediately detect increased mechanical wear and coolant dilution, resulting in the loss of the oil's lubricating properties.

Fluid Types:

- **Engine Oil**
- **Transmission Fluid**
- **Hydraulic Fluid**

Questions? Contact Technical Support:
800 344 3286 or 209 521 7860 ext. 7555
e-mail: racortech@parker.com

Analysis Kit

LFS RK760

Lube oil sampling allows the prediction of oil quality, which can be used to determine optimum maintenance schedules, as well as for early warning signs of internal engine problems.

The Racor LFS RK760 engine lube oil analysis kits comes complete with sample bottle, prepaid mailer, and documents for logging necessary information for the lab to properly analyze and report their findings to the customer.

Fluid Types:

- **Engine Oil**
- **Transmission Fluid**
- **Hydraulic Fluid**

Uses:

- **Stop ongoing wear**
- **Oil condition monitoring**
- **Failure Diagnosis**
- **Extended oil drain interval**

LFS Accessories

Hose and Seal Kits

Remote bypass oil filter kits come complete with hose, adapters and all required fittings for a simple installation. The filter is mounted at any angle, using the supplied heavy duty bracket. The oil supply is taken from the engine by means of the unique machined and anodized components. The oil is returned to the crankcase by the filter cap or drain plug adapter.

Benefits of installing one of these kits include:

- **Extended oil change intervals.**
- **Reduced maintenance cost.**
- **Reduced engine ware.**
- **Superior 1 micron filtration.**
- **Rugged design.**
- **Will not void engine warranty.**
- **Oil sampling valve included.**

LFS RK801BHK
Hose and Fittings Kit for
- **LFS RK859CL**
- **LFS RK860F**
- **LFS RK866G**

Bypass Kits

LFS RK800BHK
Hose and Fittings Kit for
- **LFS RK859CEA**
- **LFS RK859CEB**
- **LFS RK873F**

Bypass Kits

Questions? Contact Technical Support:
800 344 3286 or 209 521 7860 ext. 7555
e-mail: racortech@parker.com

ParFit™ Products

PF L2016

Specifications	PF L2016
Application	Parfit Oil Filter Replacement Element Ford Power Stroke® Model Year 2007 Engine. (1840752C91)
Maximum Flow Rate	20 GPM (75.7 LPM)
Maximum Working Pressure	60 PSI (
Micron Rating	20 Micron
Height	6.5 in. (
Diameter	3.3 in. (
Center Threads	N/A
Solids Capacity	N/A
Weight (dry)	3.4 oz (
H_2O Removal Efficiency	95%
Operating Temperature	-50° to +225°F (-45° to +107°C)

H

Cross Reference

Motorcraft	Ford	International
FL2016	3C3Z6731AA	1840752C91

Part Number Index

0

PRODUCT	PAGE#
0104-4-6	H26, H28
0104-4-8	H29
0104-6-6	H29
01-4-6-6	H26, H28

1

PRODUCT	PAGE
11078	H26, H28
11901	H26, H28
1000152	H24
11078	H32
11841	H29
11901	H32
145F-6-6	H26, H28

2

PRODUCT	PAGE
23005	H26, H28
2104-4-6	H26, H28
23005	H32
23006	H32
23021	H32
23024	H29
23059	H29
23060	H29
23061	H29
23063	H29
2MP30R	H25
2MP51UX	H32
2MP988LX	H32
2MP988RX	H32

3

PRODUCT	PAGE
3GV14X	H26, H28
3MP9400X	H32
3NL4469A	H26, H28, H29
3NL52RX	H26, H28, H32
3NL52SX	H26, H28, H32
3NL56UX	H32
3NL70LT	H26, H28, H29

4

PRODUCT	PAGE
46311	H6
46313	H6
46314	H6

6

PRODUCT	PAGE
63PT-8-62	H26, H28

A

PRODUCT	PAGE
ABS10300	H34, H40
ABS10450	H34, H40
ABS10515	H39, H40
ABS11200	H35, H40
ABS11300	H36, H40
ABS11400	H37, H40
ABS11410	H38, H40
ABS20330	H34
ABS20370	H34
ABS20430	H34
ABS20470	H34
ABS25350	H34
ABS25450	H34
ABS44030	H34

Questions? Contact Technical Support:
800 344 3286 or 209 521 7860 ext. 7555
e-mail: racortech@parker.com

ABS44045	H34
ABS44080	H37, H38, H39
ABS44090	H35, H36
ABS45155	H34
ABS45165	H34
ABS45336	H34
ABS45346	H34
ABS50030	H35, H36
ABS50057	H35, H36
ABS50065	H37
ABS50068	H35, H38, H39
ABS50070	H35, H36
ABS50072	H37, H38
ABS50082	H37, H38
AFG10FK	H26, H28
AFG30R	H25, H26, H27
AFG30RSV	H26
AFG34ST	H26
AFG50R	H25, H28
AFG50RSV	H28

B

PRODUCT	PAGE
BK14150	H24

D

PRODUCT	PAGE
DOC19P	H23, H24
DOC20PORX	H24
DOC22PC	H24
DOC22PO	H24
DOC25CPOX	H24
DOC28CTAOX	H24
DOC45K	H24

L

PRODUCT	PAGE
LFS 331	H5
LFS 331-3RE	H6
LFS 333	H5
LFS 335	H5
LFS 335-7RE	H6
LFS 339	H5
LFS 339-41RE	H6
LFS 801	H7, H8
LFS 802	H7, H8
LFS 802S	H9
LFS 820	H7, H9
LFS 825	H7, H9
LFS 880A	H7, H8
LFS RK760	H43
LFS RK761	H42
LFS RK763	H42
LFS RK800BHK	H44
LFS RK801BHK	H44
LFS RK859CEA	H19, H20
LFS RK859CEB	H19, H20
LFS RK859CL	H19, H20
LFS RK860F	H19, H20
LFS RK860FE	H19, H20
LFS RK866G	H19, H20
LFS RK873F	H19, H20

N

PRODUCT	PAGE
N11-8ANG	H26, H28, H32

P

PRODUCT	PAGE
PF L2016	H45

R

PRODUCT	PAGE
REL 1230LT	H26, H28, H29
RK46267	H1, H2
RKAFGSV12	H26, H28, H29

Section: I
Transmission Filtration

aerospace
climate control
electromechanical
filtration
fluid & gas handling
hydraulics
pneumatics
process control
sealing & shielding

Parker Racor

ENGINEERING YOUR SUCCESS.

Table of Contents

LFS Transmission Filter I1
Element and Hose Kits I3
Part Number Index I4

LFS Transmission Filter

Universal mounting bracket, filter and fittings are easily adapted to fit most any vehicle frame rail or transmission cross-over brace. High quality hose assemblies are available in varying lengths and two different transmission cooler line tube sizes to allow the installation on the most popular automatic transmissions using 5/16" and 3/8" transmission cooler tubes.

Features

- **Heavy 1/4" steel plate mounting bracket, pre-drilled and black powder-coated**
- **Die-cast aluminum head, powder-coated gloss black with four 3/8" NPT ports**
- **High efficiency 6 micron micro-glass filter element**
- **Plated hardware and Parker JIC and Ferulo Flare-less fittings**
- **Steel wire reinforced Parker hydraulic hose**

Benefits

- **Extend Transmission Life**
- **Extend Service Intervals**
- **Reduce Maintenance Costs**

LFS 22825

Transmission Kit

LFS Transmission Filter

Mounting Information

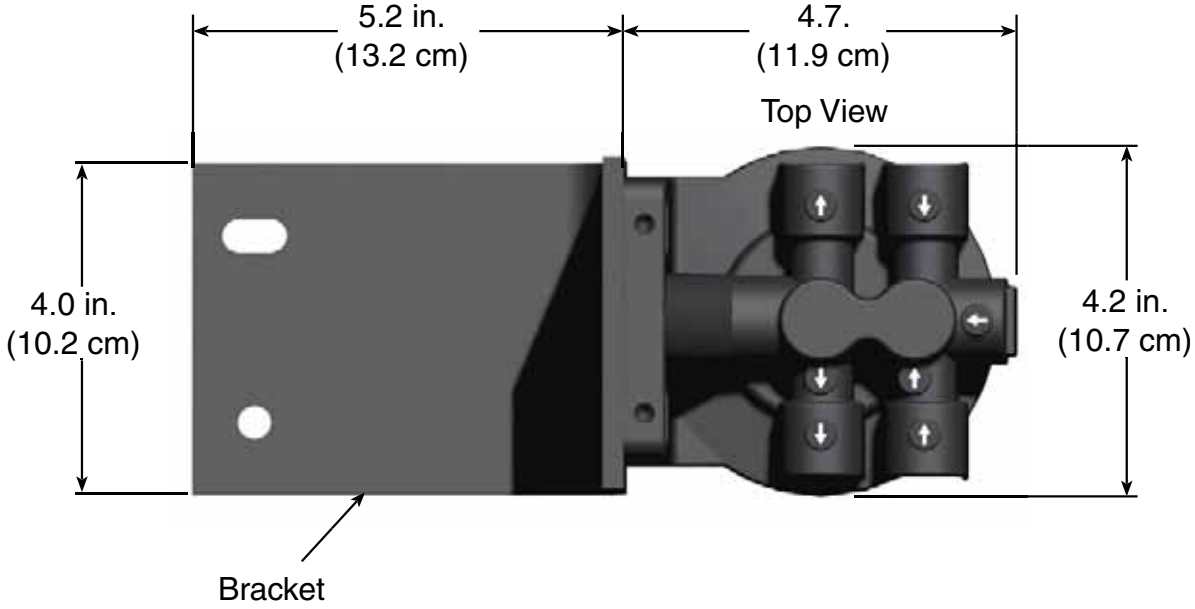

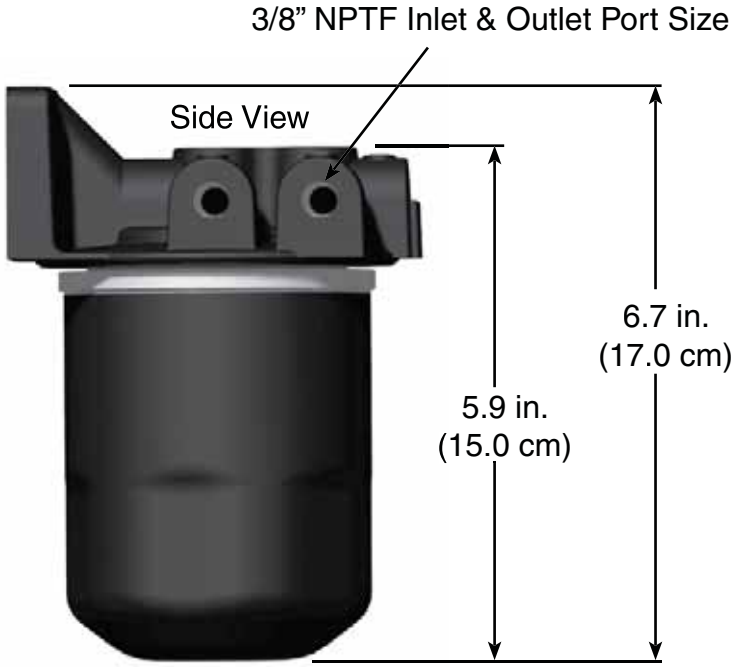

Replacement Element

LFS TF1006RE

Hose and Fitting Kits

Part Number	Fitting & Hose Size
LFS 22821-01	3/8” x 30”
LFS 22821-02	3/8” x 32”
LFS 22821-03	3/8” x 35”
LFS 22821-04	3/8” x 36”
LFS 22821-05	3/8” x 42”
LFS 22821-06	3/8” x 48”
LFS 22822-01	5/16 “ x 28”
LFS 22822-02	5/16 “ x 30”
LFS 22822-03	5/16 “ x 32”
LFS 22822-04	5/16 “ x 34”
LFS 22822-05	5/16 “ x 42”
LFS 22822-06	5/16 “ x 48”

Part Number Index

L

PRODUCT	PAGE#
LFS 22821-01	I3
LFS 22821-02	I3
LFS 22821-03	I3
LFS 22821-04	I3
LFS 22821-05	I3
LFS 22821-06	I3
LFS 22822-01	I3
LFS 22822-02	I3
LFS 22822-03	I3
LFS 22822-04	I3
LFS 22822-05	I3
LFS 22822-06	I3
LFS 22825	I1

Section: J
Additives

aerospace
climate control
electromechanical
filtration
fluid & gas handling
hydraulics
pneumatics
process control
sealing & shielding

Parker | Racor

ENGINEERING YOUR SUCCESS.

Table of Contents

Additive Overview J1
Additives J3
Additive Accessories J5
Filler Spouts J5
Part Number Index J6

Additive Overview

We've Bottled Racor Protection

Racor additives are performance-enhancing products for all climates and seasons. They mix well with fuels and are not removed by fuel filters. The high concentration of active ingredients allows for higher treatment rates. All Racor fuel additives are alcohol-free.

Recommendations

1. **For optimum engine protection and efficiency, use a fuel and oil conditioner all the time.**
2. **For operations in cold climates where diesel fuel may gel, use Diesel Winter Plus+ with Diesel Conditioner Plus+.**
3. **For operations in high humidity areas or where water in fuel tank bottoms is ever-present, use Diesel Biocide with Diesel Conditioner Plus+.**

Diesel Additives

- **Diesel Conditioner Plus+**
- **Diesel Biocide**
- **Diesel Performance Plus+**
- **Diesel Winter Plus+**

Oil Additive

- **Lube Oil Treatment**

Gasoline Additives

- **Gasoline Conditioner Plus+**

Additive Overview

16 oz

1 gal

5 gal

55 gal

Part Number	Description	Size	Treat Ratio (up to)
ADT 1116 ***ADT 1201*** ***ADT 1555***	Diesel Conditioner Plus+	16 ounces 1 gallons 55 gallon drum	320 gallons 2,560 gallons 140,800 gallons
ADT 2116 ***ADT 2201*** ***ADT 2405*** ***ADT 2555***	Diesel Biocide	16 ounces 1 gallons 5 gallons 55 gallon drum	1,280 gallons 10,240 gallons 51,200 gallons 563,200 gallons
ADT 3116	Diesel Performance Plus+	16 ounces	80 gallons
ADT 4116 ***ADT 4201*** ***ADT 4555***	Diesel Winter Plus+	16 ounces 1 gallons 55 gallon drum	128 gallons 1,024 gallons 563,200 gallons
ADT 5116	Gasoline Conditioner Plus+	16 ounces	320 gallons
ADT 7116	Lube Oil Treatment	16 ounces	2 gallons

Questions? Contact Technical Support:
800 344 3286 or 209 521 7860 ext. 7555
e-mail: racortech@parker.com

Additives

Diesel Performance Plus+

Diesel Performance Plus+ is specifically formulated to help your engine reach its optimum performance. It improves horsepower and combustion allowing for better fuel economy and longer engine life. The added performance comes with improved lubricity for better fuel system protection.

- **Noticeably improves horsepower**
- **Better fuel economy through more efficient combustion**
- **Detergency additive extends service intervals**
- **Formulated for smooth starting**
- **Lubricity additive extends component life**
- **Stabilizes fuel quality during prolonged storage**
- **Dissolves gum and varnish to keep fuel systems clean**
- **Lubricity improver passes HFRR Lubricity Test for diesel fuel per ASTM D6079-99**
- **Stabilizes fuel and prevents corrosion per ASTM D665A**
- **Alcohol free**

Part Number	Container Size	Treats
ADT 3116	16 ounces	80 gallons

Diesel Conditioner Plus+

Diesel Conditioner Plus+ is a multi-functional fuel additive for all seasons. Its formulation contains a superior detergent rating and a cetane improver which enhances power delivery, starting, and helps engines run smoother and quieter.

- **Passes BOCLE test for lubricity**
- **Reduces rust and corrosion in fuel systems**
- **Contains lubricity additive to reduce friction; prevents wear and tear, extending engine life**
- **Stabilizes fuel quality during prolonged storage**
- **Promotes oxidative stability**
- **Improved fuel economy and lower emissions**
- **Reduces injector coking**
- **Reduces sediment formation which can result in reduced maintenance**
- **Dissolves gum and varnishes to keep fuel system clean**
- **Cetane improver for added engine performance**
- **Alcohol free**

Part Number	Container Size	Treats
ADT 1116	16 ounces	320 gallons
ADT 1201	1 gallon	2,560 gallons
ADT 1555	55 gallon drum	140,800 gallons

Biodiesel Challenges

All diesel fuels contain wax, and below a certain temperature, will undergo changes such as crystallization, gelling, or viscosity increase. These changes reduce the ability of the fuel to flow and create filter plugging concerns, adversely affecting the operability of vehicles.

With traditional diesel, operability concerns are understood. Today, with well established additive treatments, operability issues have become increasingly rare. But with biodiesel, there are some new challenges:

- **Wax crystallization begins at higher temperatures in biodiesel and biodiesel blends, causing them to gel faster than conventional fuels**
- **The pour and cold filter plugging points can occur at too high of a temperature to meet specifications and winter requirements**
- **Traditional cold flow additives are often not effective in biodiesel stocks**

Since the introduction of biodiesel, several performance concerns have been raised.

- **Deposits can block injectors, impacting fuel metering, and leading to deteriorations in driveability, economy, and emissions. Biodiesel has a reputation for increasing injector deposits**
- **Foaming can also increase with biodiesel use**
- **Biodiesels may contain a high amount of emulsified water which can lead to corrosion and increased wear on engine**
- **Biodiesel often has stability problems associated with its lack of antioxidants**

Questions? Contact Technical Support:
800 344 3286 or 209 521 7860 ext. 7555
e-mail: racortech@parker.com

Additives

Diesel Biocide

Diesel Biocide is a multi-functional petroleum additive that is used to help maintain color stability and clarity. It can be used to eliminate and/or prevent the growth of bacteria, fungi, organic reactions, sludge formation, and also acts as a corrosion inhibitor.

- **Excellent for use with all forms of Biodiesel**
- **Formulated to treat more forms of algae and bacteria than other brands**
- **Concentrated formula treats more gallons per ounce**
- **EPA approved as both a biocide and aftermarket fuel additive**
- **Prevents internal corrosion from microbial fouling**
- **Fuel and water soluble**
- **Does not cause foaming**
- **Promotes fuel stability during storage**

Part Number	Container Size	Treats
ADT 2116	16 ounces	1,280 gallons
ADT 2201	1 gallon	10,240 gallons
ADT 2405	5 gallon	51,200 gallons
ADT 2555	55 gallon drum	563,200 gallons

Gasoline Conditioner Plus+

Gasoline Conditioner Plus+ is a multifunctional gasoline additive which cleans as it protects. It can be used with all types of internal combustion systems and gasoline blends. By cleaning the engine's fuel injectors and carburetor, it provides better combustion, better fuel economy, and lower exhaust emissions.

- **Cleans the fuel delivery and intake system providing fuel economy and reduced emissions**
- **Protects intake system against corrosion**
- **Use with leaded or unleaded gasoline, gasohol, and ethanol in two and four cycle engines**
- **Prevents accumulation of deposits**
- **Improves efficiency of fuel filter/water separators through deemulsification**
- **Compatible with terminal and mobile fuel systems**
- **Formulated to not harm catalytic converters**
- **Stabilizes fuel during storage**
- **Alcohol free**

Part Number	Container Size	Treats
ADT 5116	16 ounces	320 gallons

Diesel Winter Plus+

Diesel Winter Plus+ is added to middle petroleum distillates such as No. 2 heating oil or diesel fuel to improve their low temperature operability as measured by pour point and cold filter plugging point. It prevents the plugging of lines, filter screens, and valves, and contains a deicer, which can help reduce line freezing.

- **Improves fuel flow and facilitates cold weather starting, inhibits fuel icing, waxing, and gelling in cold weather**
- **Depresses the pour point by modifying the diesel wax crystal structure**
- **Improves efficiency of fuel filter/water separators through deemulsification**
- **Smoother, quieter engine operation**
- **Prevents corrosion**
- **Stabilizes fuel quality during prolonged storage**
- **Contains a cetane improver and deicer**
- **Alcohol free**

Questions? Contact Technical Support:
800 344 3286 or 209 521 7860 ext. 7555
e-mail: racortech@parker.com

Additive Accessories

Filler Spouts

RK22936 No-Spill Filler Spout

These versatile filler spouts have unlimited uses. They fit many Racor products including additives bottles and the flexible design allows users to bend the spout for flow control. This kit includes 4 hanging strips with 12 pieces on each strip; that's a total of 48 pieces per kit.

Part Number Index

A

PRODUCT	PAGE#
ADT 1116	J2, J3
ADT 1201	J2, J3
ADT 1555	J2, J3
ADT 2116	J2, J4
ADT 2201	J2, J4
ADT 2405	J2, J4
ADT 2555	J2, J4
ADT 3116	J2
ADT 4116	J2
ADT 4201	J2
ADT 4555	J2
ADT 5116	J2, J4
ADT 7116	J2

R

PRODUCT	PAGE#
RK22936	J5

Questions? Contact Technical Support:
800 344 3286 or 209 521 7860 ext. 7555
e-mail: racortech@parker.com

Section: K
Sentinel Systems

aerospace
climate control
electromechanical
filtration
fluid & gas handling
hydraulics
pneumatics
process control
sealing & shielding

Parker Racor

ENGINEERING YOUR SUCCESS.

Table of Contents

Sentinel Overview K1
The Basic Sentinel System K2
D Series Engine Safety Shut Down System K3
DTF & DTLF Series Engine Safety Shut Down System K4
Orifice Information K5
DL Series Master Controls/Engine Safety Shut Down System K6
DTF Series Master Controls/Engine Safety Shut Down System K7
DTLF Series Master Controls/Engine Safety Shut Down System K8
SVK Series Engine Safety Shut Down System K10
H & HA Series Engine Safety Shut Down System K11
CPV Series Engine Safety Shut Down System K12
STV Series Engine Safety Shut Down System K13
PV Series Engine Safety Shut Down System K14
PS & PR Series Engine Safety Shut Down System K15
CAT Adapters K16
HK-CAT Hose Kit, Caterpillar K19
HK-CMNS Hose Kit, Cummins K34
HK-JD Hose Kit, John Deere K39
HK-DDC Hose Kit, Detroit Diesel K42
HK-GU Hose Kit, General Use K48
Part Number Index K60

Sentinel Overview

Sentinel

When an abnormal condition occurs in a diesel engine, a Sentinel protection system automatically shuts it down or reduces RPMs by controlling the fuel supply. Optional manual or electronic overrides are available.

Sentinel Systems Protect Against:

- **Low oil pressure**
- **Loss of coolant**
- **High oil temperature**
- **High coolant temperature**
- **High transmission temperature**
- **Loss of tail pump pressure on irrigation engines**

Any of these conditions can quickly lead to damaged camshafts, piston heads, cylinders, crankshafts, bearings and transmissions, or even result in total engine seizure. When you consider the loss of revenue from damage and downtime, you can't afford to operate without a Sentinel Engine Protection System.

The All-mechanical advantage:

Electrical shutdown systems are prone to problems with moisture, corrosion, faulty connections and broken indicators. Sentinel systems are entirely mechanical and independent of electrical circuits. This means electrical failure can never induce a failure in your engine protection system.

Coolant Pressure Valve

Master Control

Heat Sensor

K

The Basic Sentinel System

During normal operation, oil pressure from the engine keeps the ball valve in the Sentinel Master Control in the raised position, allowing fuel to flow to the engine. With a loss of oil pressure, the ball valve drops and fuel flow is cut off or reduced, depending on the type of systems specified.

Often coolant or transmission oil temperature exceeds the setting of the Sentinel Heat Sensor, it's seal opens and dumps oil pressure from under the Master Control piston, causing the ball valve to fail and halt the flow of fuel. Set to activate at any temperature from 180ºF to 255ºF, the Heat Sensor comes with 1/2" NPTF or 3/8" NPTF threads.

The Sentinel Coolant Loss Valve is kept closed by the flow pressure of the coolant. Loss of pressure causes the valve to open and dump oil presser from under the Master Control piston, stopping fuel flow.

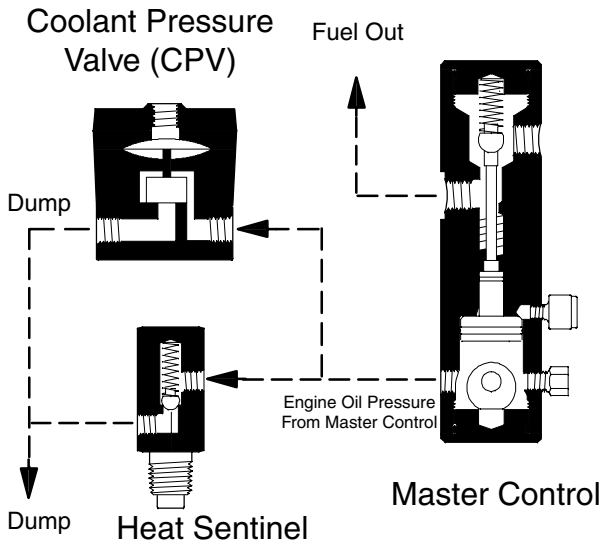

Customized Operation:

Because the piston design in the Master Control utilizes engine fuel pressure to assist in closing the fuel valve, the Master Control can be closed at a higher working oil pressure then its original low idle setting.

For example, a Sentinel Master Control installed in a Detroit Diesel engine has a primary oil pressure setting of 5 PSI for idle conditions. However, when running at governed speed under load, this engine produces approximately 70 PSI to 80 PSI fuel pressure. Under these conditions, the Sentinel Master Control closes the fuel supply to the engine when diminishing oil pressure reaches 15 PSI, not the primary setting of 5 PSI.

Temperature and pressure shut-off points can be specified within wide limits and various options allow Sentinel systems to be tailored to individual specifications. Settings can be at the factory or on the job by shop mechanic. On suction side applications, the Master Control is installed between the fuel filter and the injection pump. On injection engines, it can be installed between the final filter and the head.

Options:

There are a number of available option switches that enable you to customize the Sentinel protection system to your specific operating requirements.

Master Control for Automatic Torque Reduction:

A fuel orifice inside the Master Control automatically controls fuel flow under emergency conditions, causing predetermined, reduced RPM. It supplies metered start-up fuel.

Master Control with Solenoid Valve:

A solenoid valve controlled by a remote mounted push button may be used to provide fuel flow in emergency conditions. Full power potential or a predetermined, reduced amount of power can be supplied to a failing engine. It also supplies metered start-up fuel.

Pre-Shutdown Alarm:

A remote mounted light/buzzer gives warning of an imminent shutdown condition.

D Series Master Controls

The D Series Master Control provides positive fuel shutoff (complete shutdown) with manual override at the control to allow the operator to manually override the valve each time the engine is started.

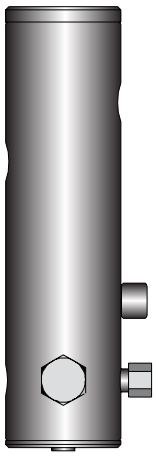

Specifications	D-5[1]	D-5V[1]	D-5Y
Engine Make	Detroit Diesel	Detroit Diesel	Cummins Big Cam
Oil Setting Pressure	5 - 25 PSI	5 - 25 PSI	5 - 25 PSI
Fuel Flow	285 GPM	285 GPM	285 GPM
Inlet / Outlet Ports	3/8” NPT	3/8” NPT	3/8” NPT
Override Feature	Yes	No	Yes
Spring Force	5 lbs	5 lbs	8 lbs

Specifications	D-10	D-10V	D-15
Engine Make	All	All	All
Oil Setting Pressure	5 - 25 PSI	5 - 25 PSI	5 - 25 PSI
Fuel Flow	285 GPM	285 GPM	285 GPM
Inlet / Outlet Ports	3/8” NPT	3/8” NPT	3/8” NPT
Override Feature	Yes	No	Yes
Spring Force	10 lbs	10 lbs	15 lbs

Specifications	D-15V	D-20	D-20V	D-25
Engine Make	All	All	All	All
Oil Setting Pressure	5 - 25 PSI	5 - 25 PSI	5 - 25 PSI	5 - 25 PSI
Fuel Flow	285 GPM	285 GPM	285 GPM	285 GPM
Inlet / Outlet Ports	3/8” NPT	3/8” NPT	3/8” NPT	3/8” NPT
Override Feature	No	Yes	No	Yes
Spring Force	15 lbs	20 lbs	20 lbs	25 lbs

[1] Includes #41737 check valve (1/4”) for fuel return line. Master Control Mounting Bracket: Order Part Number MB-1.

DTF & DTLF Series

DTF & DTLF Series Master Control Orifice Selection

Unless a specific fuel orifice was ordered, each Model DTF and DTLF Series Master Control has an orifice package (#40810) included with each unit. Each fuel orifice has a letter stamped on the head which are codes to identify the orifice size. An orifice selection chart is supplied with each orifice package. Actual orifice size is determined by the customer. When the Master Control functions as a torque reduction unit, the chart below simplifies selecting the proper orifice.

Reference

Orifice Letter	B or D	I or J	J or K	f or J	G or J	N/A
Engine Make	ALLIS -CHALMERS	CAT: D-330C, D-333C, D-343, D-1693,, D-1140, D-1150, D-1160, D-3304, D-3306	CAT: D-346, D-353, D-348, D-379	CAT: D-342	CAT: D-3204	D-3208, D-3304, D-3306

Orifice Letter	J	D or F	A or B	B	B or D	D or F
Engine Make	D-3406, D-3408, D-3412	D-3512	In-line: 3-53, 4-53, 6-53, 2-71, 3-71, 4-71, 6-71	8.2 Liter	V-Series: 6V-53, 8V-53, 6V-71, 8V-71, 12V-71, 6V-92, 8V-92	16V-71, 12V-92, 16V-92

Questions? Contact Technical Support:
800 344 3286 or 209 521 7860 ext. 7555
e-mail: racortech@parker.com

Orifice Information

Orifice Letter	J	B	B or D	B	F	D
Engine Make	12V-149, 16V-149	8360.05 (160 HP), 8220.02 (200 HP)	FIAT - ALLIS All engines	NTERNA-TIONAL HAR-VESTER DT-466, 9.0 Liter	D-817B, D-817C	MACK All engines

Orifice Letter	B or D	D or F	B
Engine Make	MERCEDES OM-352-6, OM-355-5	PERKINS All engines	VOLVO In-Line: TD-70E

Part Number	FO-1-A	FO-1-B	FO-1-C	FO-1-D	FO-1-E	FO-1-F
Orifice Size	.0083”	.0100”	.0115”	.0135”	.0156”	.0180”

Part Number	FO-1-G	FO-1-H	FO-1-I	FO-1-J	FO-1-K
Orifice Size	.0200”	.0225”	.0250”	.0280”	.0312”

DL Series

DL Series Master Controls

The DL Series Master Control is the same as the D Series except all units feature larger ports and greater fuel flow capacity. Note: For engines with a fuel flow rate higher than 4.0 GPM, two (2) DL Master Control units are required. One DL unit is installed on each side of engines equipped with a common oil pick-up.

Specifications	DL-5*	DL-5Y	DL-10
Engine Make	**Detroit Diesel**	**Cummins Big Cam**	All
Oil Setting Pressure	5-25	5-25	5-25
Fuel Flow	4.0 GPM	4.0 GPM	4.0 GPM
Inlet / Outlet Ports	1/2” NPT	1/2” NPT	1/2” NPT
Override Feature	Yes	Yes	Yes
Spring Force	5	8	10

Specifications	DL-15	DL-20
Engine Make	All	All
Oil Setting Pressure	5-25	5-25
Fuel Flow	4.0 GPM	4.0 GPM
Inlet / Outlet Ports	1/2” NPT	1/2” NPT
Override Feature	Yes	Yes
Spring Force	15	20

* Includes GM-2 check valve (3/8”) for fuel return line. Master Control Mounting Bracket: Order Part Number MB-1.

Questions? Contact Technical Support:
800 344 3286 or 209 521 7860 ext. 7555
e-mail: racortech@parker.com

DTF Series Master Controls

The DTF Series Master Control provides engine RPM (torque) reduction and does not create fuel shutoff (complete shutdown) like D and DL Series units. This tamper proof design includes a built-in, fixed by-pass to reduce RPM to idle when a loss of oil pressure is detected. Like the D and DL Series, a manual override at the control allows for full power This unit does not provide protection at idling RPM.

Note: The override valve will allow starting the engine without manually overriding the DTF.

Specifications	DTF-5*	DTF-5V*	DTF-5Y	DTF-10
Engine Make	**Detroit Diesel**	**Detroit Diesel**	Cummins Big Cam	**All**
Oil Setting Pressure	5-25	5-25	5-25	5-25
Fuel Flow	2.85 GPM	2.85 GPM	2.85 GPM	2.85 GPM
Inlet / Outlet Ports	3/8” NPT	3/8” NPT	3/8” NPT	3/8” NPT
Override Feature	Yes	No	Yes	Yes
By-pass Feature	Yes	No	Yes	Yes
Spring Force	5	5	8	10

Specifications	DTF-10V	DTF-15	DTF-20	DTF-25
Engine Make	**All**	All	All	All
Oil Setting Pressure	5-25	5-25	5-25	5-25
Fuel Flow	2.85 GPM	2.85 GPM	2.85 GPM	2.85 GPM
Inlet / Outlet Ports	3/8” NPT	3/8” NPT	3/8” NPT	3/8” NPT
Override Feature	No	Yes	Yes	Yes
By-pass Feature	No	Yes	Yes	Yes
Spring Force	10	15	20	25

* Includes #41737 check valve (1/4”) for fuel return line. Master Control Mounting Bracket: Order Part Number MB-1.

DTLF Series

DTLF Series Master Controls

The DTLF Series Master Control is the same as the DTF Series except all units feature the by-pass and have a greater fuel flow capacity. Note: For engines with a fuel flow rate higher than 4.0 GPM, two (2) DL Master Control units are required. One DTLF unit is installed on each side of engines equipped with a common oil pick-up. The fuel inlet and outlet ports are 1/2" NPT.

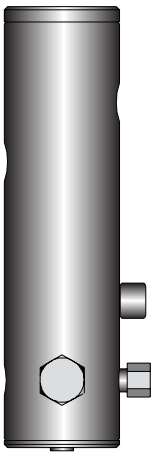

Specifications	DTLF-5[1]	DTLF-5Y	DTLF-10
Engine Make	**Detroit Diesel**	**Cummins Big Cam**	All
Oil Setting Pressure	5-25	5-25	5-25
Fuel Flow	4.0 GPM	4.0 GPM	4.0 GPM
Inlet / Outlet Ports	1/2" NPT	1/2" NPT	1/2" NPT
Override Feature	Yes	Yes	Yes
Spring Force	5	8	10

Specifications	DTLF-10	DTLF-15	DTLF-20
Engine Make	All	All	All
Oil Setting Pressure	5-25	5-25	5-25
Fuel Flow	4.0 GPM	4.0 GPM	4.0 GPM
Inlet / Outlet Ports	1/2" NPT	1/2" NPT	1/2" NPT
Override Feature	Yes	Yes	Yes
Spring Force	10	15	20

[1] Includes GM-2 check valve (3/8") for fuel return line. Master Control Mounting Bracket: Order Part Number MB-1

Questions? Contact Technical Support:
800 344 3286 or 209 521 7860 ext. 7555
e-mail: racortech@parker.com

Replacement Parts

	Part Number	Description
1.	**41728**	Filter / Breather
2.	**43572**	Oil Orifice (0.043”) Fitting
3.	**AG-1**	Air Starter Assembly
4.	**40819**	Cam Shaft Bushing (includes 43506 O-ring)
5.	**43595**	Cam Shaft / Handle Assembly
6.	**See Orifice Information Chart**	
7.	**43704**	Stop Screw
	43705	Stop Screw Sleeve
8.	**43597**	Bottom End Cap (D-V only, 1/8”NPT)
9.	**43601**	Cam with Screw (D, DL, DTF & DTLF)
10.	**43502**	Large Quad Ring
11.	**43599**	Piston, D & DTF
	43603	Piston, DL & DTLF
	43602	Piston, D-V
12.	**43501**	Small Quad Ring
13.	**43008**	Main Spring, D-5V, D-5, DL-5, DTF-5 & DTLF-5
	43009	Main Spring, D-5YV, D-5Y, DL-5Y, DTF-5Y & DTLF-5Y
	43010	Main Spring, D-10V, D-10, DL-10, DTF-10 & DTLF-10 (was PN. D9)
	43011	Main Spring, D-15 & DL-15, DTF-15 & DTLF-15
	43012	Main Spring, D-20 & DL-20, DTF-20 & DTLF-20 (was PN. D9-25)
	43013	Main Spring, D-25 & DL-25, DTF-25 & DTLF-25
14.	**40836**	Orifice Plug (DTF, DTLF)
15.	**41752**	Main Ball Seal
	49000	Main Ball Seal with Spring Kit
16.	**43020**	Valve Spring
17.	**43504**	O-ring
18.	**43598**	End Cap (D-V only, 1/4”NPT)
19.	**40810**	Orifice Package (A, B, D, F, J & K sizes)
	SK49012	Seal Kit, All models
	SP-1	End Cap Spanner Wrench
	SK49013	Rebuild Kit, D & DTF
	SK49014	Rebuild Kit, DL & DTLF
	SK49015	Rebuild Kit, D-V
	7330	Installation Instructions

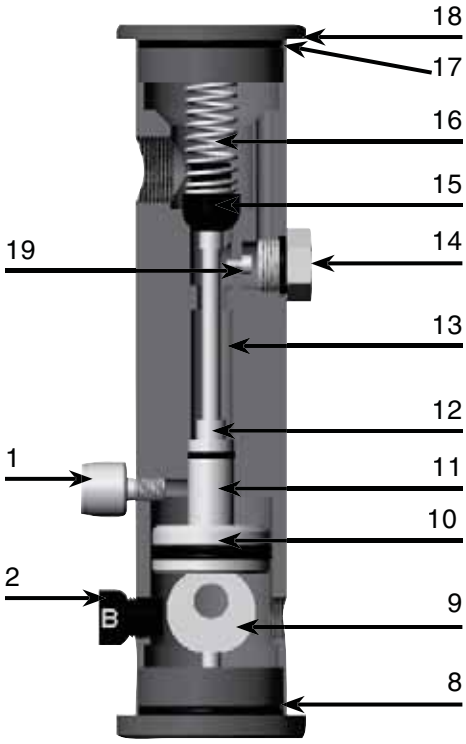

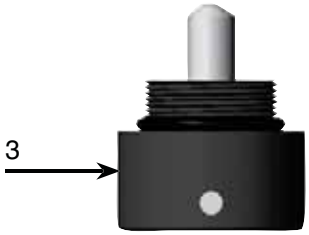

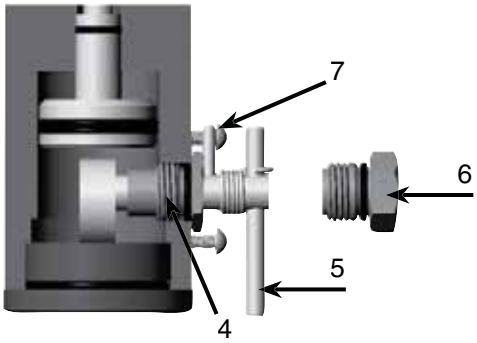

K

SVK Series

Electric Solenoid Bypass

Provides easy override at startup and to the pre-selected, limited horsepower / torque to the engine in the event of a shut-down.

Kit contains:

SV-4 Series Fuel Solenoid Valve (installed on Master Control at factory) PB-1 Push Button Decal Wiring, Hardware, Connectors The Master Control is not included in SVK-1/SVK-2 kits or with the SV-4-12/SV-4-24 Valves.

Override/Heat Shields

	Part Number	Description
1.	**SVK-1**	Fuel Solenoid, 12 vdc kit
2.	**SVK-1A**	Fuel Solenoid, 12 vdc kit
3.	**SVK-2**	Fuel Solenoid, 24 vdc kit
4.	**SVK-2A**	Fuel Solenoid, 24 vdc kit
5.	**SV-4-12**	Fuel Solenoid, 12 vdc Valve
6.	**SV-4-24**	Fuel Solenoid, 24 vdc Valve

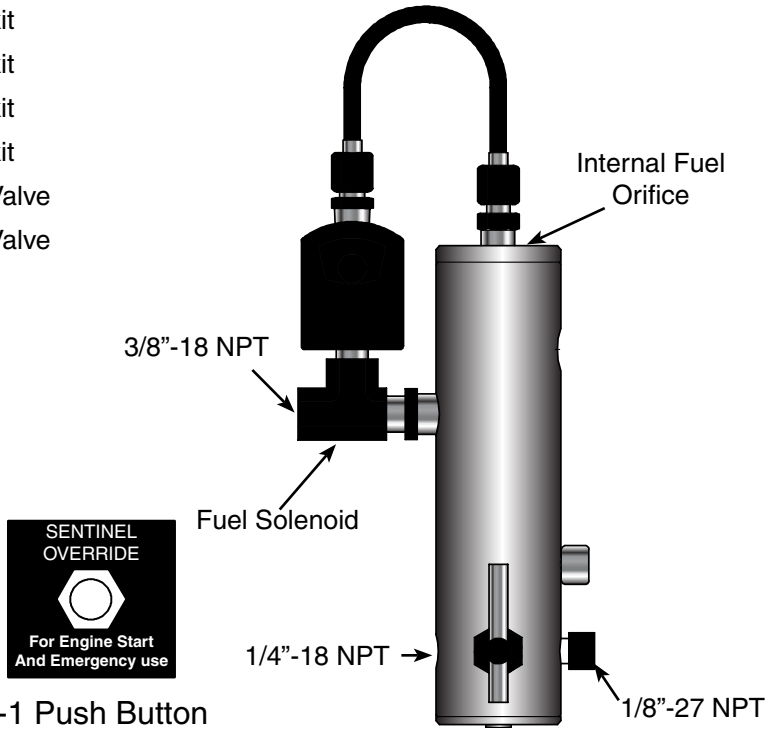

PB-1 Push Button

Questions? Contact Technical Support:
800 344 3286 or 209 521 7860 ext. 7555
e-mail: racortech@parker.com

H & HA Series

Heat Sensor

Sentinel Heat Sensors work in conjunction with the Master Control to protect the engine from abnormally high coolant, transmission oil or crankcase oil temperature. Model H and Model HA Heat Sensors are mechanical dump-type units, normally closed. Temperature actuation settings of 180 to 260° Fahrenheit (82 to 127° Centigrade) can be specified as required for engine coolant and lubricating oil, transmissions, driven compressors, etc.

H-180

How to Order

H or HA	-180	PS
Basic Model: MODEL H 1/2” NPT thread MODEL HA 3/8” NPT thread	Temperature: 180*, 190, 200*[2], 210[1], 218*, 225*, 240[2], 185[1], 195, 205*[2], 212, 220[1]	Indicate: **PS** for a 1/8” NPTF female port option is available to accommodate a pressure switch (if desired)

* Indicate that a 1/8” NPTF female port option is available to accommodate a pressure switch.
[1] This temperature setting available for H only.
[2] PS option available for H only.
[3] Metric thread.

Note: The heat sensor must be monitoring **moving** fluid.
MODEL H 1/2” NPT installation thread, two or more may be used in parallel.
MODEL HA 3/8” NPT installation thread, two or more may be used in parallel.
MODEL HM Metric 18M X 1.5 installation thread. Limited selection, see table below.
To order, designate **H or HA**, followed by a dash (-) and then the temperature setting desired. (see below)

K

Questions? Contact Technical Support:
800 344 3286 or 209 521 7860 ext. 7555
e-mail: racortech@parker.com

Parker Racor

CPV Series

Coolant Pressure Valve (CPV)

Specifications	CPV
Crack Pressure: Opens Closes	 **.50 PSI** **.75 PSI**
Flow Resistance	**1 PSI**
Port Size: Inlet Outlet	 1/4" NPTF 1/4" NPTF
Coolant Port	1/8" NPTF
All Ports	Female
Material	fiberglass-filled nylon with an aluminum base

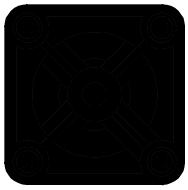

- CPV Standard Coolant Pressure Valve (replaces and retrofits older CL-79).
- RKCPV: Rebuild Kit for CPV
- MB-79 Mounting Bracket for CPV
- MB-1 Mounting Bracket for CPV and Master Control

Oil and Coolant Warning Kit

The Sentinel Oil and Coolant Warning Kit includes all necessary components to warn the operator of abnormally high oil or coolant temperature and low or loss of coolant pressure.

The Oil and Coolant Kit includes the following:

- **Heat Sensor with 1/4" NPTF ports**
- **Pressure Switch (set as specified below)**
- **Coolant Pressure Valve (CPV)**
- **Light / Buzzer (12 vdc or 24 vdc)**
- **Mounting Bracket (MB-79)**
- **Orificed Fitting (42540)**
- **Branch Tee Fitting, 1/4" NPTF**
- **Street Tee Fitting, 1/4" NPTF**
- **Sentinel Deca**

Light-Buzzer

Part Number	Sensor Setting	Pressure Setting	Switch Voltage
WK-1A	212°F	10 PSI	12 vdc
WK-1B	212°F	10 PSI	24 vdc

WK-2 Hose and Fitting Kit for above kits (shown installed in illustration).

Questions? Contact Technical Support:
800 344 3286 or 209 521 7860 ext. 7555
e-mail: racortech@parker.com

STV Series

Self Venting Test Valve

Now, there are no more excuses why the system is not tested and working properly, with just one-quarter turn of the valve handle, the testing is complete! The Sentinel Self Venting Test (STV) Valve Kit eliminates excessive troubleshooting time, fluid spillage, potential component damage and personal harm due to hot oil or water.

How The Valve Works

Sentinel's STV installs at the water inlet to the coolant valve:

1. **In normal operation, water flows through the STV, allowing water to the coolant valve.**
2. **To test the system, the red handle on the STV is turned one-quarter to shut the water flow to the coolant valve.**
3. **When the STV is closed, it vents the small amount of water which becomes trapped between it and the coolant valve. The loss of water pressure from closing the STV causes the coolant valve to open and simulate an engine shutdown.**
4. **The engine will not operate until the STV is returned to the open position.**

Because the engine will not operate until the STV is returned to the open position, an added feature of the new STV is that it can be used as an anti-theft device. At the job site, the operator can turn the STV to the test position when his work is complete. If removal of the equipment is attempted, it would not start because the pressure will not build up close to the coolant valve

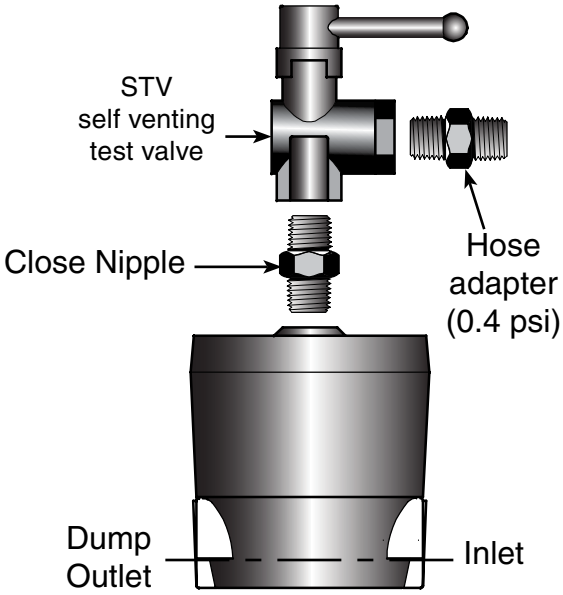

K

PV Series

Dump Valves

PV Series Dump Valves protect water pumps and air compressors from loss of fluid. They are normally open and will close only when the input pressure reaches the rated pressure of the dump valve (noted at the end of the part number). This pressure can be applied by water discharge from a water pump or air pressure from an air compressor.

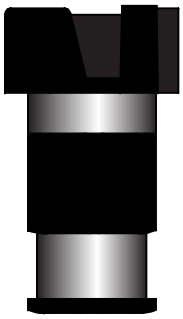

Specifications	PV4-15	PV4-50
Minimum Pressure	15 PSI	50 PSI
Maximum Pilot pressure	150 PSI.	150 PSI.
Port Size	1/4” NPTF	1/4” NPTF
Orifice	7/32”	7/32”

Note: CV flow factor: 0.83.

Cylinder Liner Pullers

Sentinel offers three liner pullers for Detroit Diesel engines that provide fast and easy removal and installation of cylinder liners. The puller is placed inside the cylinder and spans from air intake openings. Then turn the crankshaft and the piston will push the liner up and out.

Specifications	LP53-71	LP-92	LP-149
Detroit Diesel Engine Type	53 & 71 Series	92 Series	149 Series

Questions? Contact Technical Support:
800 344 3286 or 209 521 7860 ext. 7555
e-mail: racortech@parker.com

PS & PR Series

Oil Pressure Switches

Pressure Switches (PS) can be used in conjunction with Sentinel Master Controls and Model H and HA Heat Sensors to affect immediate engine shutdown by de-energizing the existing fuel pump solenoid or by activating an alarm to warn of an impending shut-down.

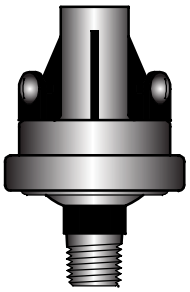

Specifications	PS-1	PS-1A	PS-2	PS-2A[1]
Valve Closed	5 PSI	10 PSI	15 PSI	15 PSI
Tread Size	1/8” -27 MPTM	1/8” -27 MPTM	1/8” -27 MPTM	1/8” -27 MPTM

[1] Specifically for use with Caterpillar 3208, Detroit 8.2 and Cummins B Series engines.

Pressure Relief Valves

The PR valves are used for relieving pressure between the transfer pump and Sentinel Master Control and are mandatory for all mechanical fuel pumps.

Specifications	PR-35	PR-35
Aplication	Gear Driven Transfer Pumps	Mack Systems with no By-pass
Port Size Inlet	1/4”-18 NPT	1/4”-18 NPT
Port Size Outlet	1/4”-18 NPT	1/4”-18 NPT
Length	1 7/8” long in a 3/4” hexagonal body	1 7/8” long in a 3/4” hexagonal body

K

Questions? Contact Technical Support:
800 344 3286 or 209 521 7860 ext. 7555
e-mail: racortech@parker.com

Parker Racor

CAT Adapters

CAT-1

CAT-2

Expansion Plug For Caterpillar D-353 Engine. The purpose of the CAT-2 Adapter is to prevent fuel from going directly to the injection pump without going through the Sentinel Master Control first.

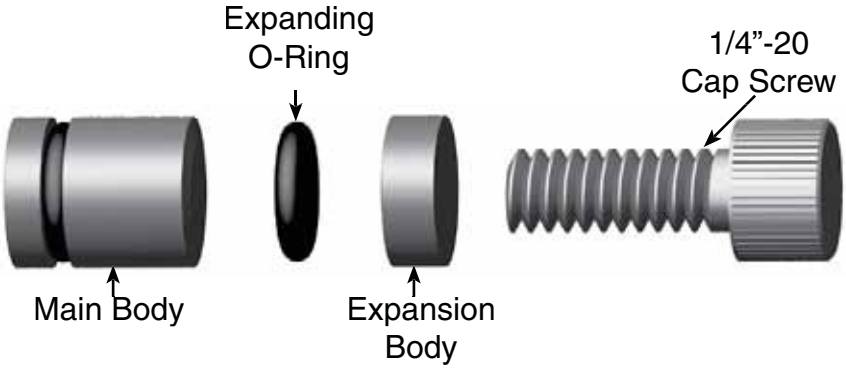

Note: On some D343 CAT engines in trucks, the CAT-3 Adapter is not required because the ports at the injection pump and filter housing have threads in them. All that is required is to run a fuel line from the filter housing to the fuel Inlet port of the Master Control and one line from the fuel outlet port of the master control to the injection pump.

Questions? Contact Technical Support:
800 344 3286 or 209 521 7860 ext. 7555
e-mail: racortech@parker.com

CAT Adapters

CAT-3

Adapter For Caterpillar 5.4 Bore Engine
(Replaces 8S5030 CAT adapter)

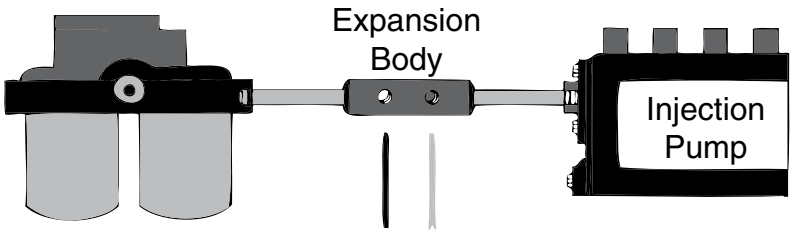

CAT-4

Adapter For Caterpillar D8H and K Engines.

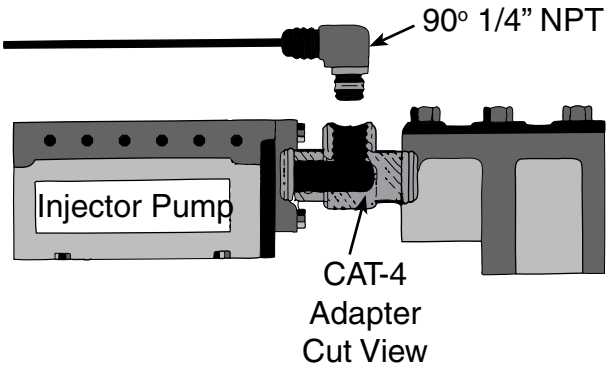

K

CAT-5

Adapter Block For Caterpillar Sleeve Metering 3304 & 3306 Engines.

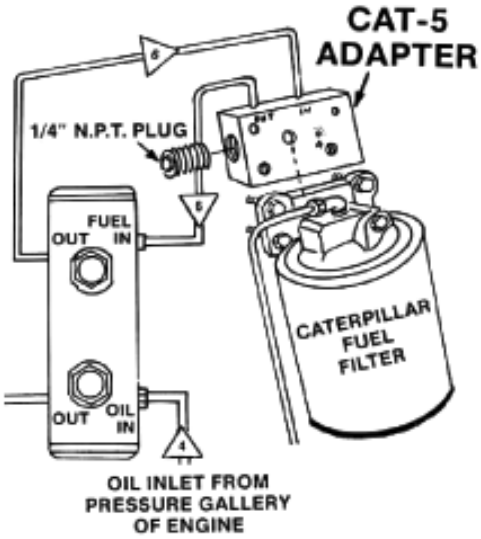

CAT Adapters

CAT-7

Adapter For Caterpillar New Scroll 3304 Engines Manufactured After 1980.

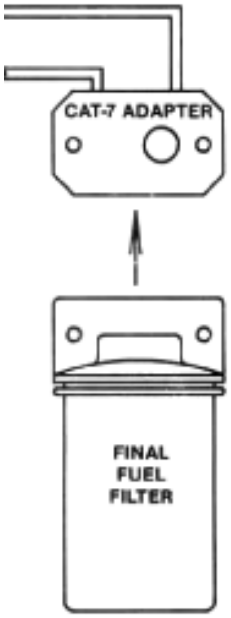

CAT-8

Adapter For Caterpillar New Scroll 3304 Engines Manufactured Outside U.S.

HK-CAT Hose Kits

Caterpillar

This HK-CAT kit is specifically assembled for Caterpillar engines and includes the most common hose and fittings necessary to install a complete Sentinel engine protection system on any engine (see Application Guide for details). Depending on the application, this kit may include extra hose and fittings and some application-specific hose and fittings will be customer supplied.

Hose Kit Overview

Find your engine and order one each of the listed components. See notes below.

Caterpillar	D-330, D-330C and D-333C					
System Type	**Master Conttrol**	**Heat Sensor**	**Coolant pressure Valve**	**Mounting Brackets**	**Valves & Adapters**	**Hose & Fitting Kit**
Shutdown	D-10	HA-218	CPV	MB-1, MB-79	CAT-1, STV	HK-CAT
De-Torque	DTF-10	HA-218	CPV	MB-1, MB-79	CAT-1, STV	HK-CAT
Shutdown with Override	D-10 with SVK-1A	HA-218	CPV	MB-1, MB-79	CAT-1, STV	HK-CAT
D-336, D-346, D-348 and D-379						
Shutdown	D-10	HA-218	CPV	MB-1, MB-79	STV	HK-CAT
De-Torque	DTF-10	HA-218	CPV	MB-1, MB-79	STV	HK-CAT
Shutdown with Override	D-10 with SVK-1A	HA-218	CPV	MB-1, MB-79	STV	HK-CAT
D-342						
Shutdown	D-10	HA-218	CPV	MB-1, MB-79	CAT-4, STV	HK-CAT
De-Torque	DTF-10	HA-218	CPV	MB-1, MB-79	CAT-4, STV	HK-CAT
Shutdown with Override	D-10 with SVK-1A	HA-218	CPV	MB-1, MB-79	CAT-4, 41737 and STV	HK-CAT
D-343, D-398 (new style) and D-1693						
Shutdown	D-10	HA-218	CPV	MB-1, MB-79	CAT-3, STV	HK-CAT
De-Torque	DTF-10	HA-218	CPV	MB-1, MB-79	CAT-3, STV	HK-CAT
Shutdown with Override	D-10 with SVK-1A	HA-218	CPV	MB-1, MB-79	CAT-3, STV	HK-CAT

Notes: Engines below 180 GPH (approx. 2.85 GPM) fuel flow must use a D master control. Engines with fuel flow between 180 and 240 GPH (approx. 4 GPM) must use a DL master control. Engines with 240 GPH fuel flow, or higher, require two master controls. Standard SVK-1A override is 12 vdc. Order SVK-2A for 24 vdc applications. The STV test valve will aid in initial system test and assist with testing in the field.

HK-CAT

Hose Kit Overview

Find your engine and order one each of the listed components. See notes below.

Caterpillar	D-353, D-398 (old style) and D-399					
System Type	**Master Conttrol**	**Heat Sensor**	**Coolant pressure Valve**	**Mounting Brackets**	**Valves & Adapters**	**Hose & Fitting Kit**
Shutdown	D-10	H-218	CPV	MB-1, MB-79	CAT-2, STV	HK-CAT
De-Torque	DTF-10	H-218	CPV	MB-1, MB-79	CAT-2, STV	HK-CAT
Shutdown with Override	D-10 with SVK-1A	H-218	CPV	MB-1, MB-79	CAT-2, STV	HK-CAT
D-318, D-353 Station Engines						
Shutdown	D-10	H-218	CPV	MB-1, MB-79	CAT-2, STV	HK-CAT
1140, 1150, 1160 and 3208 V8						
Shutdown	D-10	H-218	CPV	MB-1, MB-79	PS-1A, PB-1 and STV	HK-CAT
De-Torque	DTF-10	H-218	CPV	MB-1, MB-79	PS-1A, PB-1 and STV	HK-CAT
Shutdown with Override	D-10 with SVK-1A	H-218	CPV	MB-1, MB-79	STV	HK-CAT
3114, 3116 and 3117 with Unit Injected Fuel System and D-7 Engine						
Shutdown	D-10	H-218NF	CPV	MB-1, MB-79	PR-60, 41737 and STV	HK-CAT
De-Torque	DTF-10	H-218NF	CPV	MB-1, MB-79	PR-60, 41737 and STV	HK-CAT
Shutdown with Override	D-10 with SVK-1A	H-218NF	CPV	MB-1, MB-79	PR-60, 41737 and STV	HK-CAT
3204 with Direct Injected, Scroll Metered Fuel System - Late Models						
Shutdown with Override	D-15 with SVK-1A	H-218	CPV	MB-1, MB-79	PR-60, 41737 and STV	HK-CAT

Questions? Contact Technical Support:
800 344 3286 or 209 521 7860 ext. 7555
e-mail: racortech@parker.com

Hose Kit Overview

Find your engine and order one each of the listed components. See notes below.

Caterpillar	All 3208					
System Type	**Master Conttrol**	**Heat Sensor**	**Coolant pressure Valve**	**Mounting Brackets**	**Valves & Adapters**	**Hose & Fitting Kit**
Electrical Shutdown	N/A	H-218PS	CPV	MB-79	L3-1, PB-1, PS-1A, D-25-F4, PS-2A and STV	N/A
D-3304, D-3306, D8800 and D7G Engines with Sleeve Metering Fuel System						
Shutdown	D-15	H-218	CPV	MB-1, MB-79	CAT-S, STV	HK-CAT
De-Torque	DTF-15	H-218	CPV	MB-1, MB-79	CAT-S, STV	HK-CAT
Shutdown with Override	D-15 with SVK-1A	H-218	CPV	MB-1, MB-79	CAT-S, STV	HK-CAT
D-3304 and D-3306 with Direct Injected, Scroll Metering Fuel System						
Shutdown	D-15	H-218	CPV	MB-1, MB-79	PR-60, Cat-7 and STV	HK-CAT
De-Torque	DTF-15	H-218	CPV	MB-1, MB-79	PR-60, Cat-7 and STV	HK-CAT
Shutdown with Override	D-15 with SVK-1A	H-218	CPV	MB-1, MB-79	PR-60, Cat-7 and STV	HK-CAT
All 3306A, 3306C, 3406A, 3406B and 3406C						
Shutdown	D-10	HA-218	CPV	MB-1, MB-79	PR-60, 41737 and STV	HK-CAT
De-Torque	DTF-10	HA-218	CPV	MB-1, MB-79	PR-60, 41737 and STV	HK-CAT
Shutdown with Override	D-10 with SVK-1A	HA-218	CPV	MB-1, MB-79	PR-60, 41737 and STV	HK-CAT

Notes: Engines below 180 GPH (approx. 2.85 GPM) fuel flow must use a D master control. Engines with fuel flow between 180 and 240 GPH (approx. 4 GPM) must use a DL master control. Engines with 240 GPH fuel flow, or higher, require two master controls. Standard SVK-1A override is 12 vdc. Order SVK-2A for 24 vdc applications. The STV test valve will aid in initial system test and assist with testing in the field, if necessary. D-3304 and D-3306 engines with sleeve metering fuel systems that have the fuel filter mounted at any location other than directly on the injection pump require no fuel adapter. D8800 engines - add a PR-60 pressure relief valve.

HK-CAT

Application Guide

Find your engine and order one each of the listed components. See notes below.

Continued from previous page.

Caterpillar	All 3406 Stationary Engines					
System Type	**Master Conttrol**	**Heat Sensor**	**Coolant pressure Valve**	**Mounting Brackets**	**Valves & Adapters**	**Hose & Fitting Kit**
Shutdown	D-15	HA-218	CPV	MB-1, MB-79	41737, STV	HK-CAT
All D-3408 and D-3412 Engines						
Shutdown	D-15	HA-218	CPV	MB-1, MB-79	41737, STV	HK-CAT
De-Torque	DTF-15	HA-218	CPV	MB-1, MB-79	41737, STV	HK-CAT
Shutdown with Override	D-15 with SVK-1A	HA-218	CPV	MB-1, MB-79	41737, STV	HK-CAT
All 3508, 3512 and 3516 Engines						
Shutdown	D-10	HA-218	CPV	MB-1, MB-79	GM-2, STV	HK-CAT
De-Torque	DTF-10	HA-218	CPV	MB-1, MB-79	GM-2, STV	HK-CAT
Shutdown with Override	D-10 with SVK-1A	HA-218	CPV	MB-1, MB-79	GM-2, STV	HK-CAT

Notes: Engines below 180 GPH (approx. 2.85 GPM) fuel flow must use a D master control. Engines with fuel flow between 180 and 240 GPH (approx. 4 GPM) must use a DL master control. Engines with 240 GPH fuel flow, or higher, require two master controls. Standard SVK-1A override is 12 vdc. Order SVK-2A for 24 vdc applications. The STV test valve will aid in initial system test and assist with testing in the field.

Questions? Contact Technical Support:
800 344 3286 or 209 521 7860 ext. 7555
e-mail: racortech@parker.com

HK-CAT

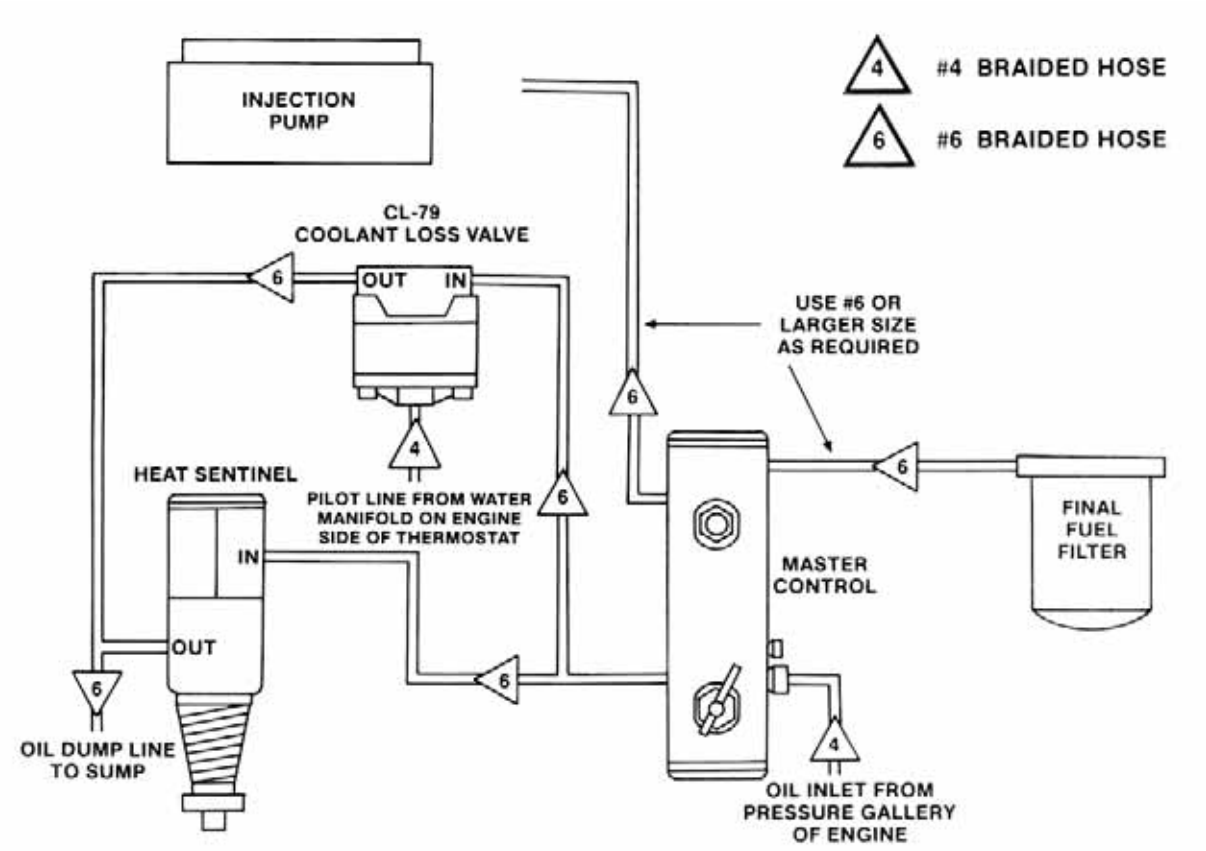

Important: Proper Installation Mandatory for Optimum Performance

Refer to Master Control Installation Instructors for additional information.

K

HK-CAT

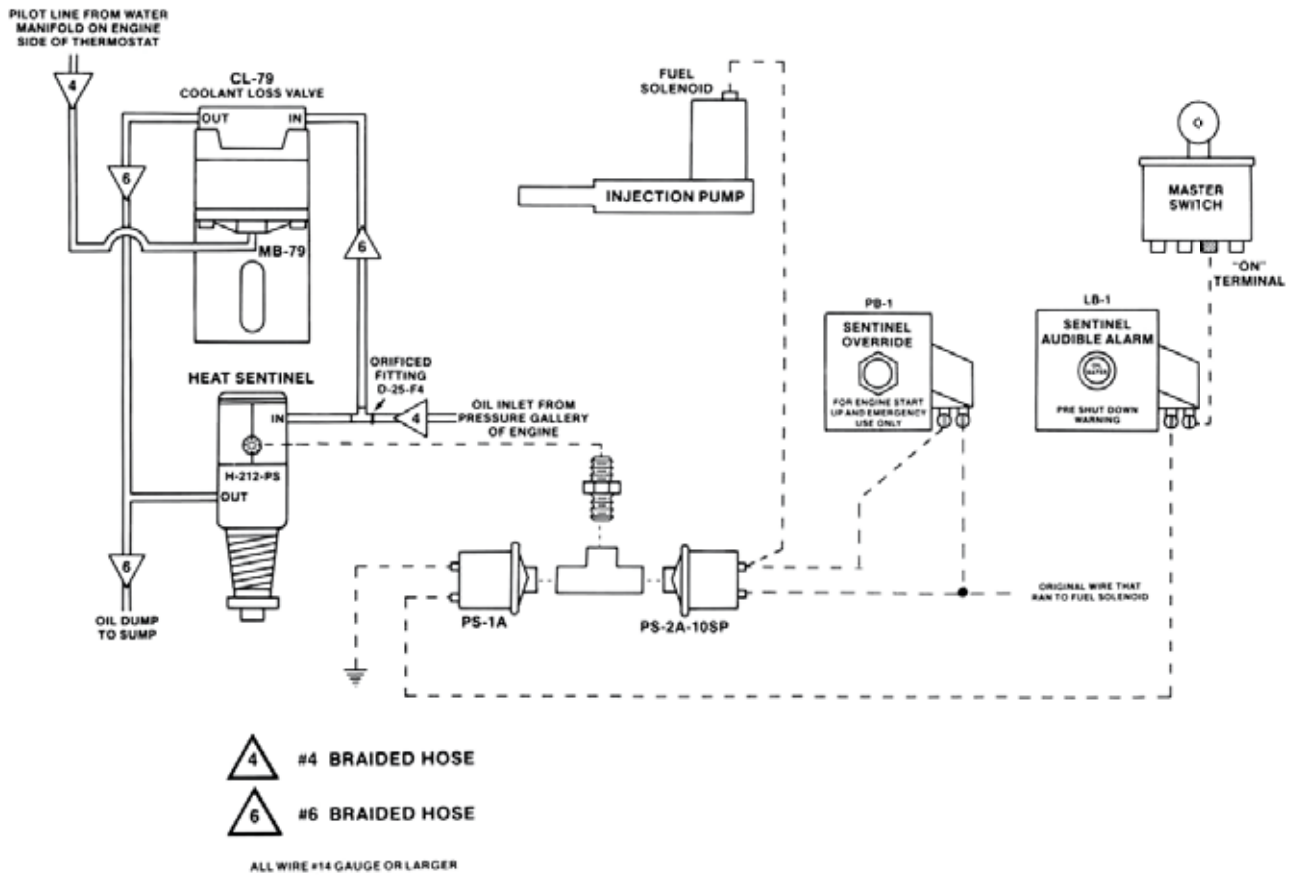

Important: Proper Installation Mandatory for Optimum Performance
Refer to Master Control Installation Instructors for additional information.

Notes: Use only the water pick up point at 1/8" Pipe Plug on top left side of water pump.

Instructions For Installing CAT-2 Adapter

1. **Remove the four (4) bolts that hol dthe fuel filter housing onto the injection pump. Remove the fuel filter housing from the injection pump.**
2. **Remove the 1/4 N.P.T. plug that is installed in the end of the fuel filter housing, in front of the fuel "inlet" port to the injection pump.**
3. **Remove the 1/4-20 cap screw in the CAT-2 Adapter. Using a long 1/4-20 bolt, insert the main body of the CAT-2 Adapter into the port from which the 1/4 N.P.T. plug was removed. Make sure that the Main Body of the CAT-2 Adapter is inserted approximately 1/4" past the fuel "Inlet" port to the injection pump. Insert the Expansion Body and the 1/4-20 cap screw and tighten the cap screw.**

   CAUTION: the port into which the CAT-2 Adapter is to be inserted is supposed to be 27/64 (.422) I.D. Some ports may be undersize in which case a 27/64 drill or reamer will have to be used to enlarge the port.
4. **Install a suitable adapter that will accept the #8 fuel line into the port form which the 1/4 N.P.T. plug was removed. Replace the 1/4 N.P.T. plug at the opposite end of the port with a suitable adapter that will accept the #8 fule line.**
5. **Replace the fuel filter housing, plumb the fuel system and the remainder of the system shown.**

THE PURPOSE OF THE CAT-2 ADAPTER IS TO PREVENT FUEL FROM GOING DIRECTLY TO THE INJECTION PUMP WITHOUT GOING THROUGH THE SENTINEL MASTER CONTROL FIRST.

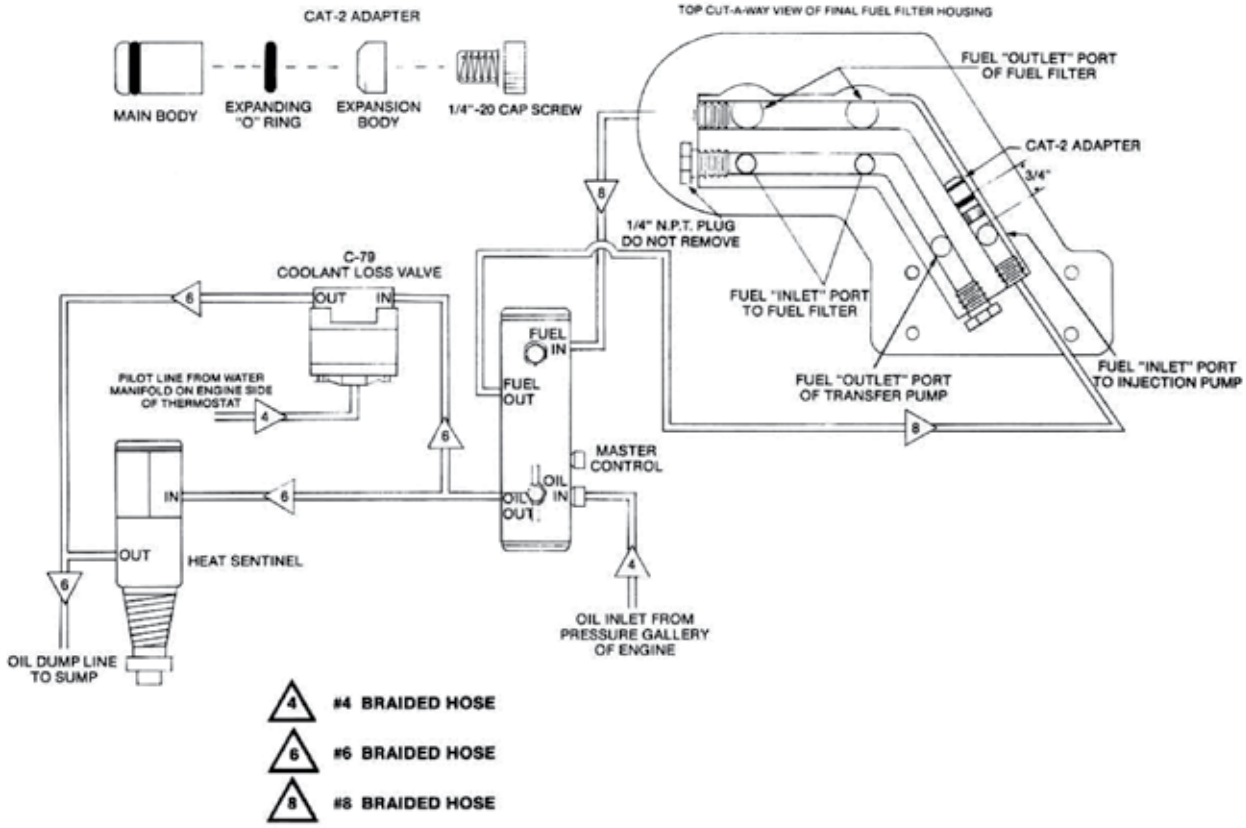

Questions? Contact Technical Support:
800 344 3286 or 209 521 7860 ext. 7555
e-mail: racortech@parker.com

Parker Racor

HK-CAT

Instructions For Installing CAT-3 Adapter

1. **Remove the final fule filter housing by removing the five (5) bolts that hold it to the engine. Replace the fuel sleeve (855030) that connects the fuel filter housing to the injection pump, with the CAT-3 Adapter.**
2. **Replace the fuel filter housing.**
3. **Install the proper fittings in the CAT-3 Adapter and the Sentinel Master Control that will accept the #8 fuel lines. Make sure that the fuel coming out of the final fuel filter goes to the fuel "In" port of the Master Control.**
4. **Plumb the remainder of the system as shown.**

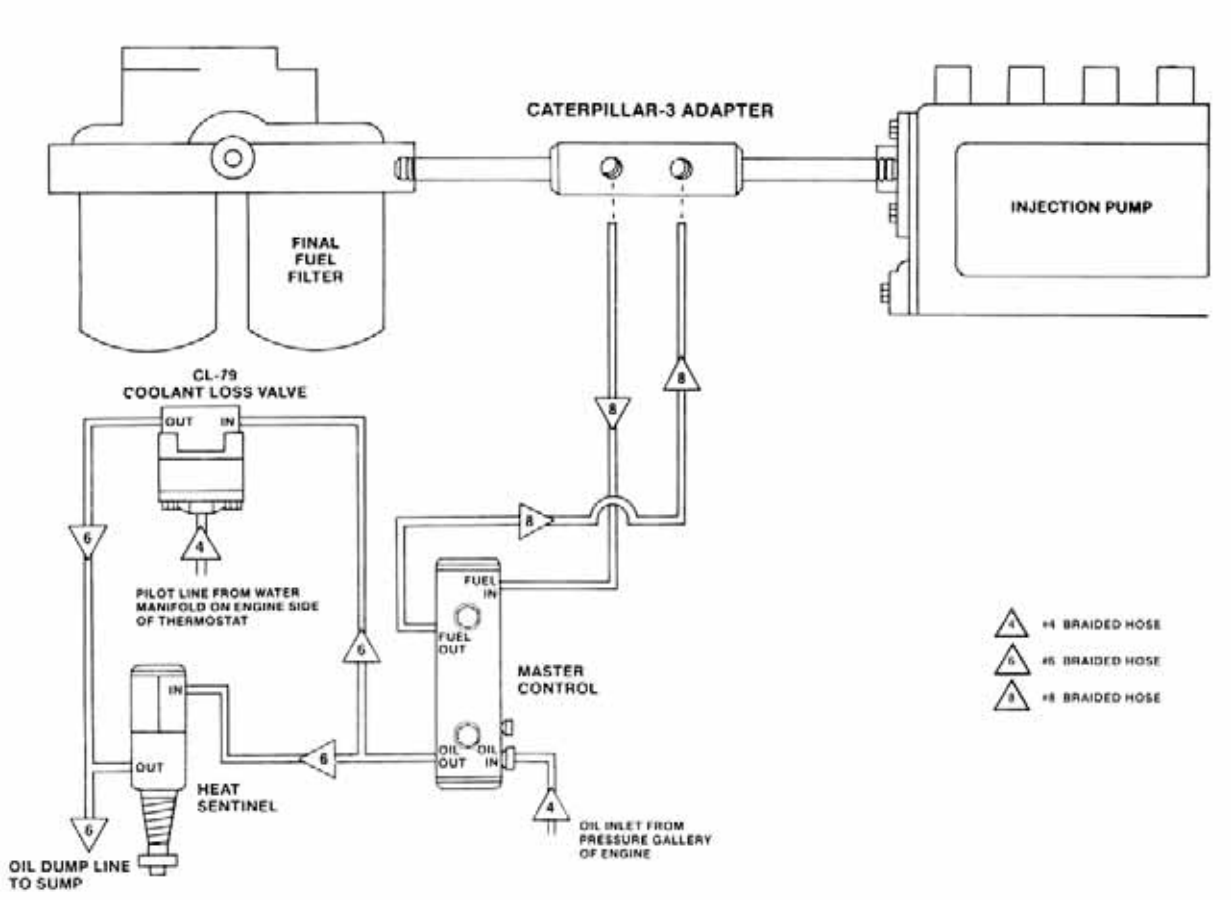

Note: On some D343 CAT engines in trucks, the CAT-3 Adapter is not required becasue the ports at the injection pump and filter housing have threads in them. All that is required is to run a fuel line from the filter housing to the fuel "In" port of the Master Control and one line from the fuel "Out" port of the Master Control to the injection pump.

Questions? Contact Technical Support:
800 344 3286 or 209 521 7860 ext. 7555
e-mail: racortech@parker.com

HK-CAT

For Caterpillar 3406 Engines

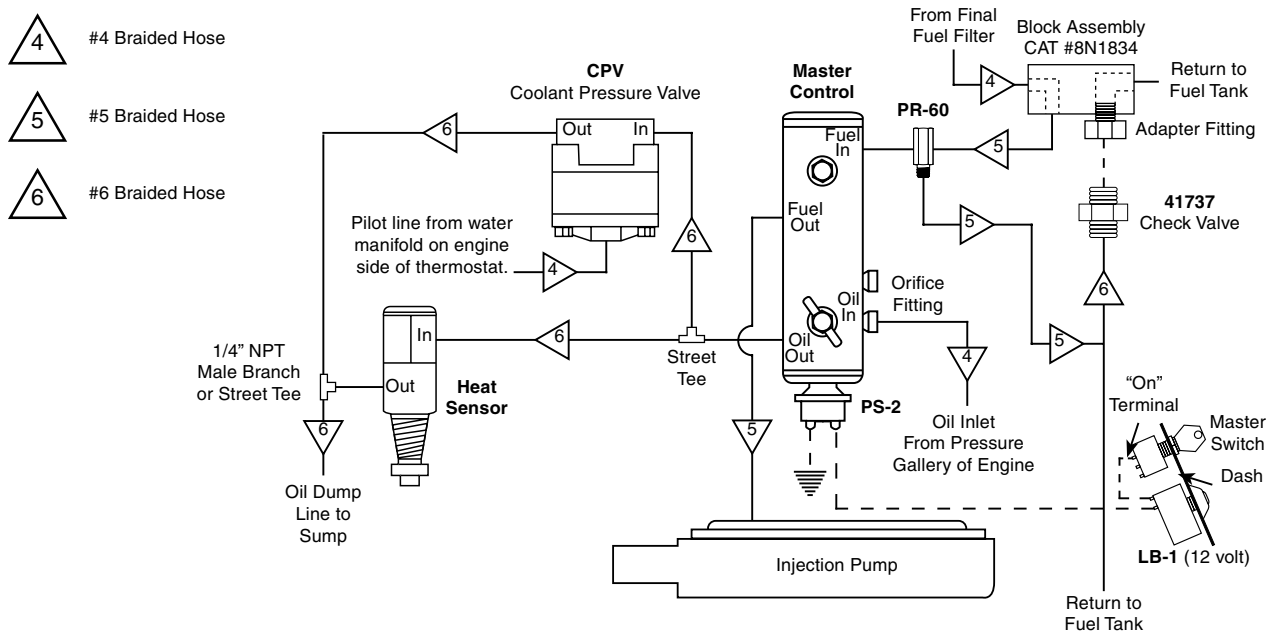

Light Buzzer (LB-1) and Pressure Switch (PS-2) as shown, are optional equipment.

K

HK-CAT

For Caterpillar 3408 & 3412 Engines

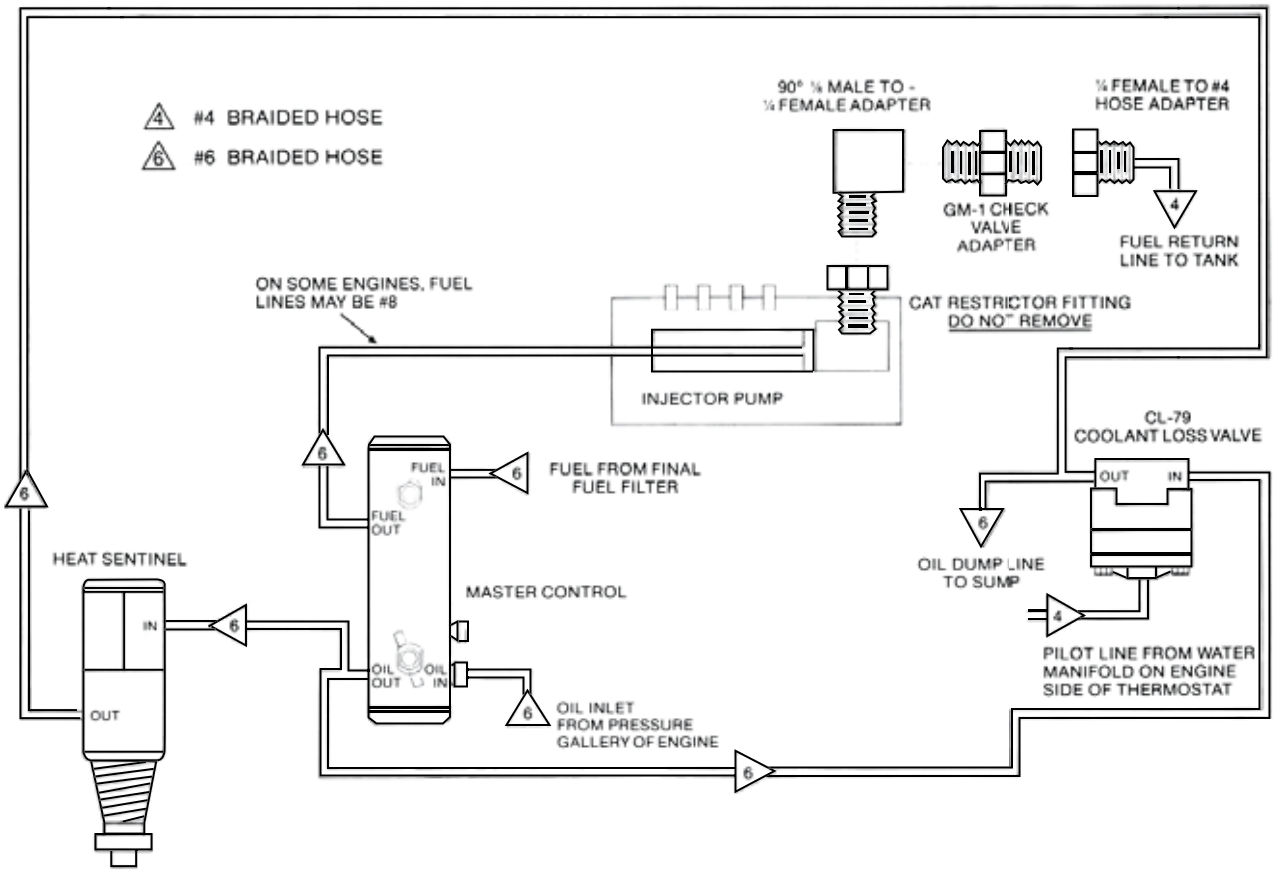

Questions? Contact Technical Support:
800 344 3286 or 209 521 7860 ext. 7555
e-mail: racortech@parker.com

CAT-4 Adapter

1. **Remove the final fuel filter housing by disconnecting the two fuel primer lines at the back of the filter housing and removing the five (5) bolts holding the housing on the engine.**
2. **Remove the 1/4 N.P.T. plug, located between the two fuel filter line fittings on the back of the filter housing. Install a 90˚ 1/4 N.P.T. to #6 Adapter in the place that the 1/4 N.P.T. plug was removed.**
3. **Replace the fuel sleeve (7L7345) that connects the final fuel filter housing to the injection pump with the CAT-4 Adapter. The 90˚ 1/4 N.P.T. to #6 Adapter will have to be installed in the CAT-4 Adapter before the housing is bolted back on the engine. There is not enough room to install it after the housing has been installed. NOTE: Make sure the open fuel port in the CAT-4 Adapter is toward the injection pump.**
3. **Bolt the housing back to the engine and plumb the fuel system as shown.**
3. **Install the remainder of the system and plumb as shown.**

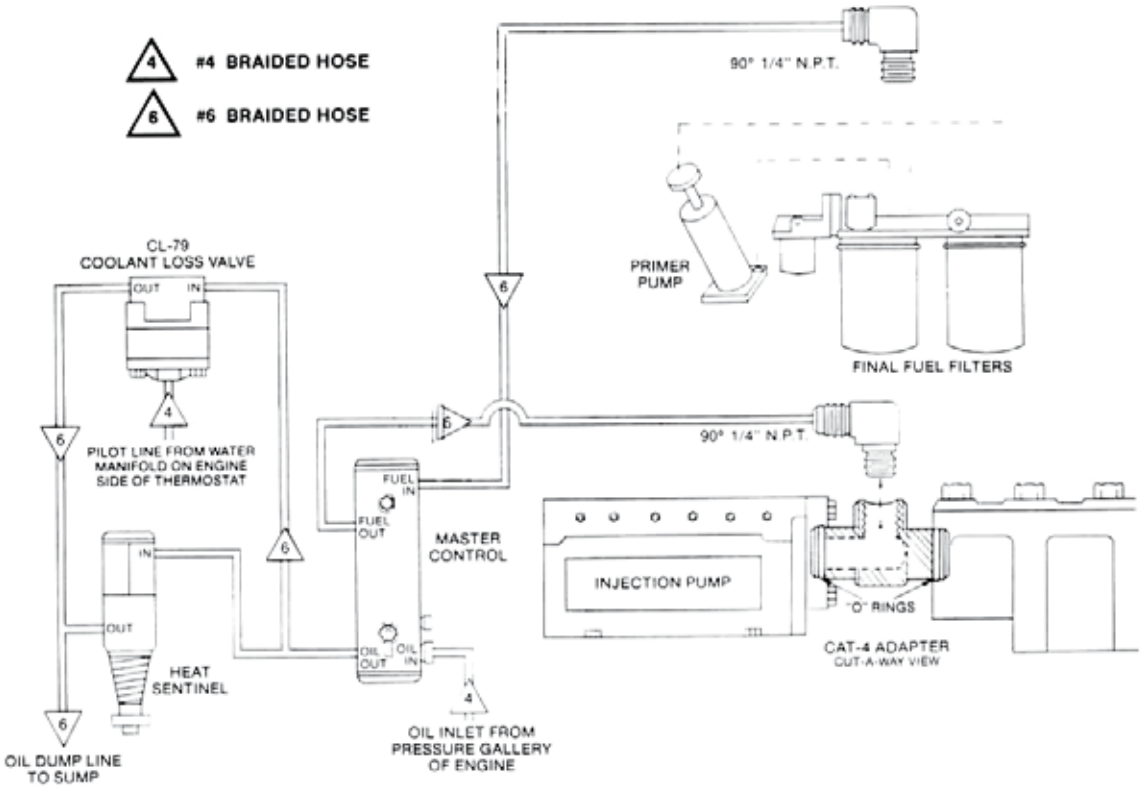

Important: Proper Installation Mandatory for Optimum Performance

Refer to Master Control Installation Instructors for additional information.

Questions? Contact Technical Support:
800 344 3286 or 209 521 7860 ext. 7555
e-mail: racortech@parker.com

Parker Racor

HK-CAT

CAT-5 Fuel Block

1. Remove fuel filter housing from pump by removing 4 bolts.
2. Place CAT-5 Fuel Block Adapter between filter and pump, matching fuel flow holes. Use (2) 6N-2843CAT gaskets.
3. Replace filter housing using longer bolts.
4. Connect fuel supply line from CAT-5 Adapter port marked "Out" to fuel inlet side of Master Control, using #6 Braided Hose.
5. Connect fuel line from "Fuel Out" of Master Control to opening in adapter marked "In", using same size line as in Step 4.
6. Plumb Heat Sentinel and Coolant Loss Valve as shown. Do Not use hose with less than 5/16" I.D. CAUTION: Check opening and cavity in Engine for obstructions - the brass power element of Heat Sentinel must not be squeezed or distorted when installed.
7. Connect oil line from pressure gallery of engine, using #4 Braided Hose to orifice fitting in Master Control.
8. Connect oil outlet of Heat Sentinel and Coolant Loss valve (dump line) to non-pressure opening in engine (sump or pan), using same size hose as in Step 6.
9. Note stampings, "IN", "OUT" and "4" on CAT-5 Adapter.
10. Water pickup for CL-79 is from Pilot Line from Water Manifold on engine side of thermostat.

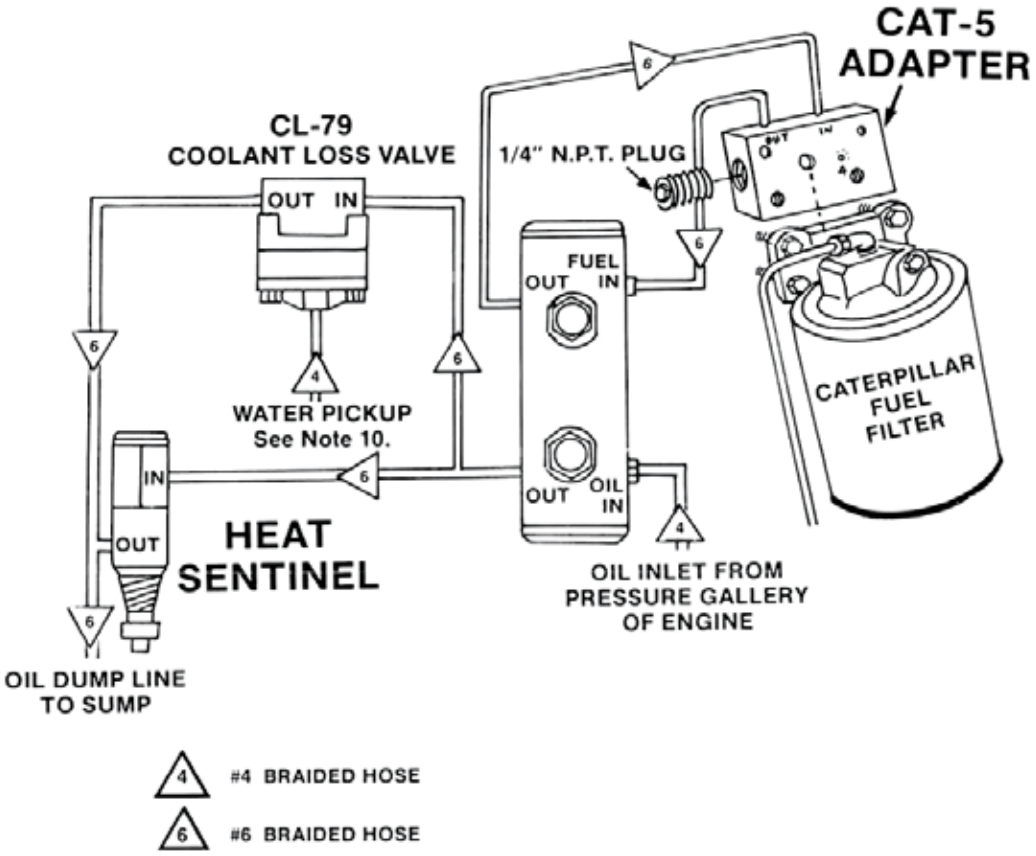

Important: Proper Installation Mandatory for Optimum Performance

Refer to Master Control Installation Instructors for additional information.

Questions? Contact Technical Support:
800 344 3286 or 209 521 7860 ext. 7555
e-mail: racortech@parker.com

CAT-7 Fuel Block

1. Remove fuel filter housing from pump by removing 4 bolts.
2. Place CAT-7 Fuel Block Adapter between filter and pump, matching fuel flow holes. Use (2) 7N9520CAT gaskets.
3. Replace filter housing using longer bolts.
4. Connect fuel supply line from CAT-7 Adapter port marked "Out" to fuel inlet side of Master Control, using #6 Braided Hose.
5. Connect fuel line from "Fuel Out" of Master Control to opening in adapter marked "In", using same size line as in Step 4.
6. Plumb Heat Sentinel and Coolant Loss Valve as shown. Do Not use hose with less than 5/16" I.D. CAUTION: Check opening and cavity in Engine for obstructions - the brass power element of Heat Sentinel must not be squeezed or distorted when installed.
7. Connect oil line from pressure gallery of engine, using #4 Braided Hose to orifice fitting in Master Control.
8. Connect oil outlet of Heat Sentinel and Coolant Loss valve (dump line) to non-pressure opening in engine (sump or pan), using same size hose as in Step 6.
9. Note stampings, "IN", "OUT" and "4" on CAT-7 Adapter.
10. Water pickup for CL-79 is from Pilot Line from Water Manifold on engine side of thermostat.

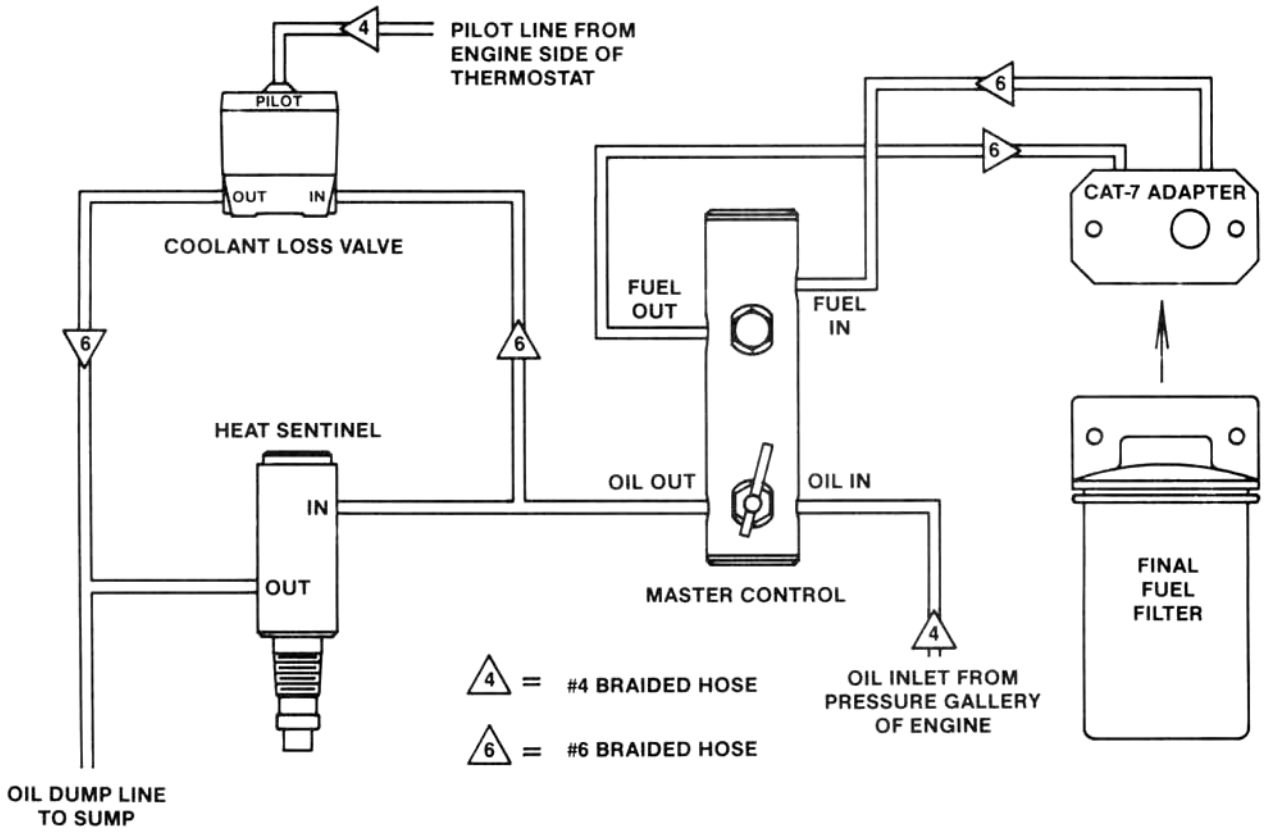

Important: Proper Installation Mandatory for Optimum Performance

Refer to Master Control Installation Instructors for additional information.

Questions? Contact Technical Support:
800 344 3286 or 209 521 7860 ext. 7555
e-mail: racortech@parker.com

Parker Racor

HK-CAT

Master Control and Coolant Loss Valve (CL-79) may be mounted together on MB-1 Mounting bracket for ease in mounting. Using two of the four bolts on top of air intake manifold (located about the middle of the "V" of engine) is suitable for most vehicle installation.

Heat Sentinel Installation

Three $^3/_8$" NPT openings into coolant jackets are easily accessible on most engines. One on either head and one at rear of engine in the "V" on water manifold. Other $^1/_2$" NPT openings are also available and suitable for Heat Sentinel installation.

Oil Pressure Pickup

Use one of the following:

1. **Tee into oil pressure gage line.**
2. **Drill and tap ($^1/_8$" NPT) removable plate on right front of engine.**
3. **Drill and tap ($^1/_8$" NPT) plate on left side of engine. (Two bolts hold plate on) This plate is covering main oil pressure gallery.**
4. **Any other main oil pressure outlet on engine.**

Coolant Pressure Pickup

There are numerous openings in engine coolant system that are suitable. make sure that opening which is selected is between the water pump and thermostat housing. The $^3/_8$" NPT opening that was not used in Heat Sentinel installation makes a good pickup point. To insure proper coolant pressure pickup point was selected, a 0-30 P.S.I. pressure gage may be used to test the water pump pressure. The water pressure should increase as the engine RPM increases. If pressure does not increase as engine RPM increases, pickup point is on suction side of water pump.

Oil Dump

Use one of the following:

1. **Plate on left front of engine in hydraulic pump is not installed on engine. (Six bolts hold plate on.) Drill and tap $^1/_4$" NPT for opening.**
2. **Cover over cam shaft gear on top front of engine. (Four bolts hold plate on.) Drill and tap $^1/_4$" NPT for opening.**
3. **Some valve covers have openings that can be tapped $^1/_4$" NPT. (No drilling necessary.)**
4. **Any convenient non-pressure openings in crankcase.**

Fuel Section

The fuel line that runs the final fuel filter to the injection pump may be used by disconnecting it at the injection pump and connecting it to the Master Control fuel "Inlet" port. A new line will have to be made to run from the fuel "Outlet" port to the injection pump.

Locate the fuel return line on the injection pump and install the GM-1 Check Valve with the arrow pointing towards the fuel tank. **CAUTION**: Make sure that the Cat restrictor fitting that is installed in the fuel return line is not removed or the engine will not develop full power. Check system for shutdown as described in installation sheet furnished with master Control.

For Caterpillar 3508, 3512 & 3616 Engines

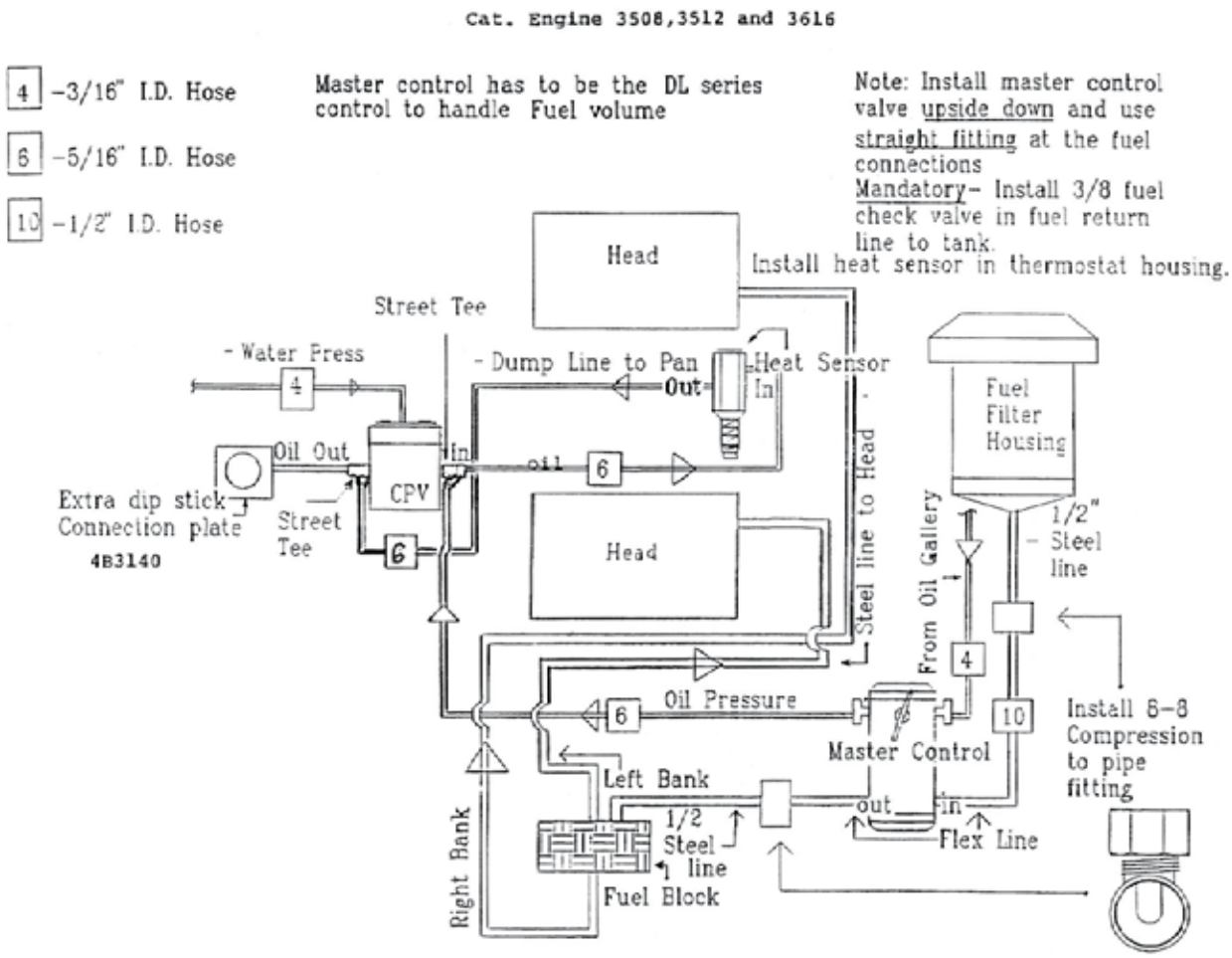

K

HK-CMNS

Cummins Hose Kits

This HK-CMNS kit is specifically assembled for Cummins engines and includes the most common hose and fittings necessary to install a complete Sentinel engine protection system on any engine (see Application Guide for details). Depending on the application, this kit may include extra hose and fittings and some application-specific hose and fittings will be customer supplied.

Cummins Application Guide

Find your engine and order one each of the listed components. See notes below.

Cummins	All B Series direct injected engines with rotary Bosch pump, 6 CT 8.36 engine with Bosch injection pump, B Series with Bosch in-line injection pump, 230 thru 475, 855, 902, Big Cam II and III, L-10, M-11, NH-220, KTA-19C, KTA-450, KTA-1710, K-1150, all in-line 6, V504 and all C Series					
System Type	**Master Conttrol**	**Heat Sensor**	**Coolant pressure Valve**	**Mounting Brackets**	**Valves & Adapters**	**Hose & Fitting Kit**
Shutdown	D-5Y	HA-212	CPV	MB-1, MB-79	PR-60, STV	HK-CMNS
De-Torque	DTF-5Y	HA-212	CPV	MB-1, MB-79	PR-60, STV	HK-CMNS
Shutdown with Override	D-5Y with SVK-1A	HA-212	CPV	MB-1, MB-79	PR-60, STV	HK-CMNS
All 2300, M-38-V-12, 3067, K-50-V-16 and K Series engines						
Shutdown	DL-10	H-212	CPV	MB-1, MB-79	PR-60, 41737, STV	HK-CMNS
De-Torque	DTLF-10	H-212	CPV	MB-1, MB-79	PR-60, 41737, STV	HK-CMNS
Shutdown with Override	DL-10 with SVK-1A	H-212	CPV	MB-1, MB-79	PR-60, 41737, STV	HK-CMNS

Notes: Engines below 180 GPH (approx. 2.85 GPM) fuel flow must use a D master control. Engines with fuel flow between 180 and 240 GPH (approx. 4 GPM) must use a DL master control. Engines with 240 GPH fuel flow, or higher, require two master controls. Standard SVK-1A override is 12 vdc. Order SVK-2A for 24 vdc applications. Hose and fitting kits include the most common components to fit most applications - additional components, if needed, are customer supplied. The STV test valve will aid in initial system test and assist with testing in the field, if necessary. Cummins C Series engines require two 14mm to $^{3}/_{8}$" NPT banjo fittings (part number 40748).

Questions? Contact Technical Support:
800 344 3286 or 209 521 7860 ext. 7555
e-mail: racortech@parker.com

HK-CMNS

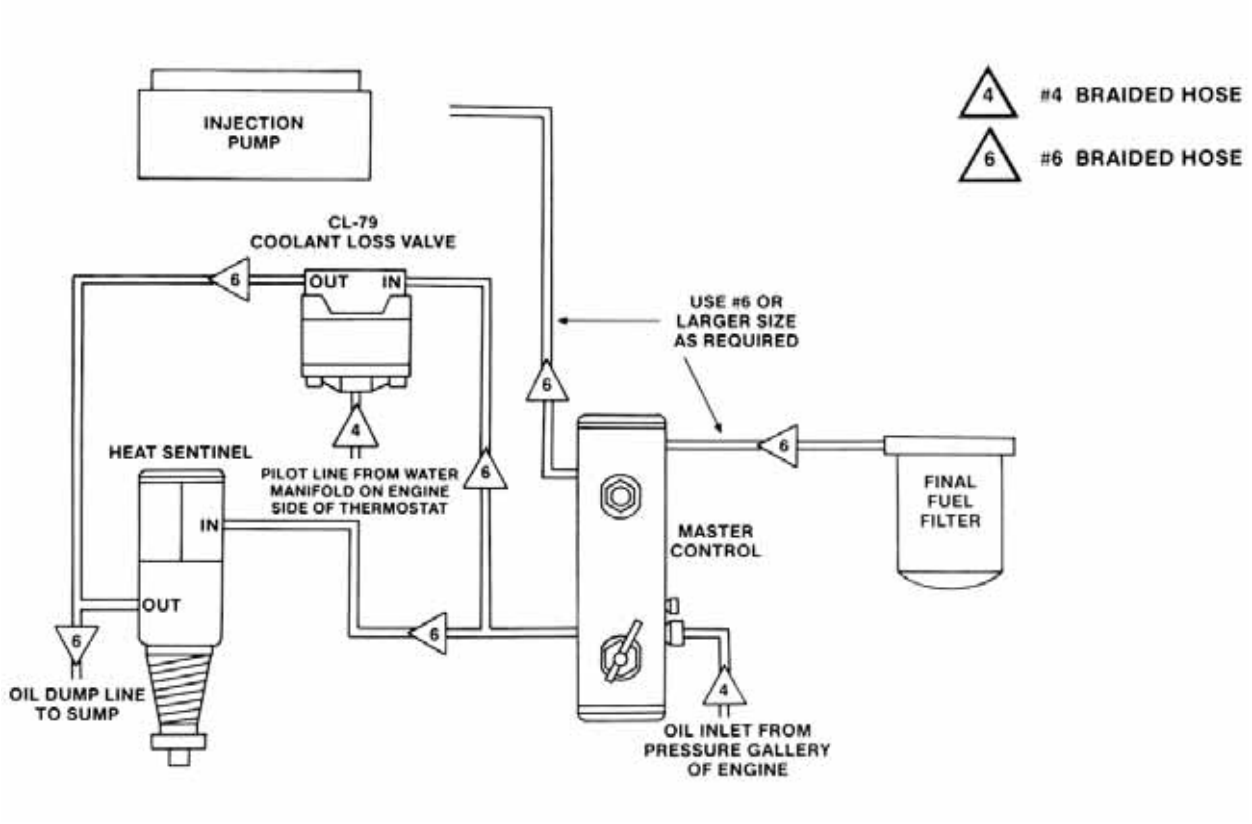

Important: Proper Installation Mandatory for Optimum Performance

Refer to Master Control Installation Instructors for additional information.

K

HK-CMNS

All Cummins w/PT Pump Fuel Systems

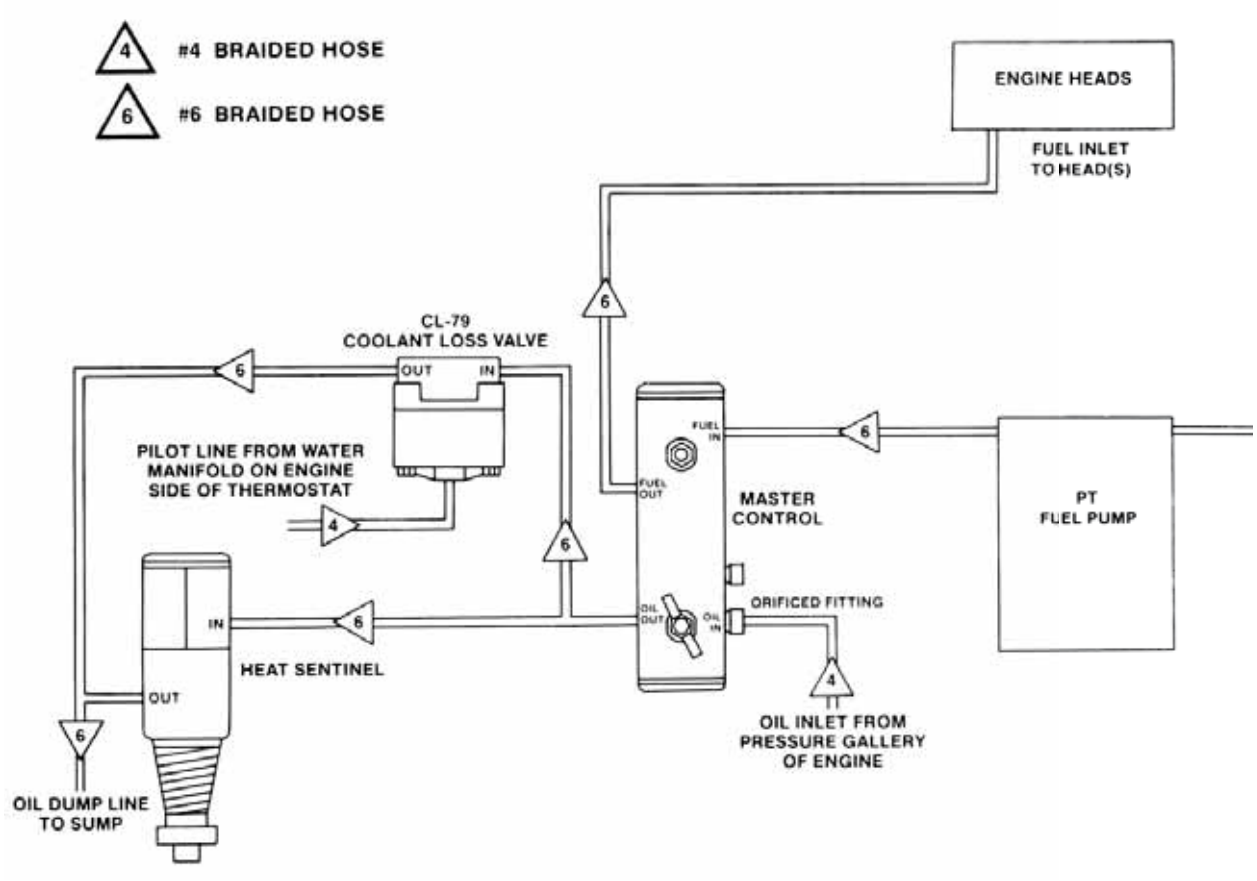

Important: Proper Installation Mandatory for Optimum Performance
Refer to Master Control Installation Instructors for additional information.

Questions? Contact Technical Support:
800 344 3286 or 209 521 7860 ext. 7555
e-mail: racortech@parker.com

Cummins "B" Series

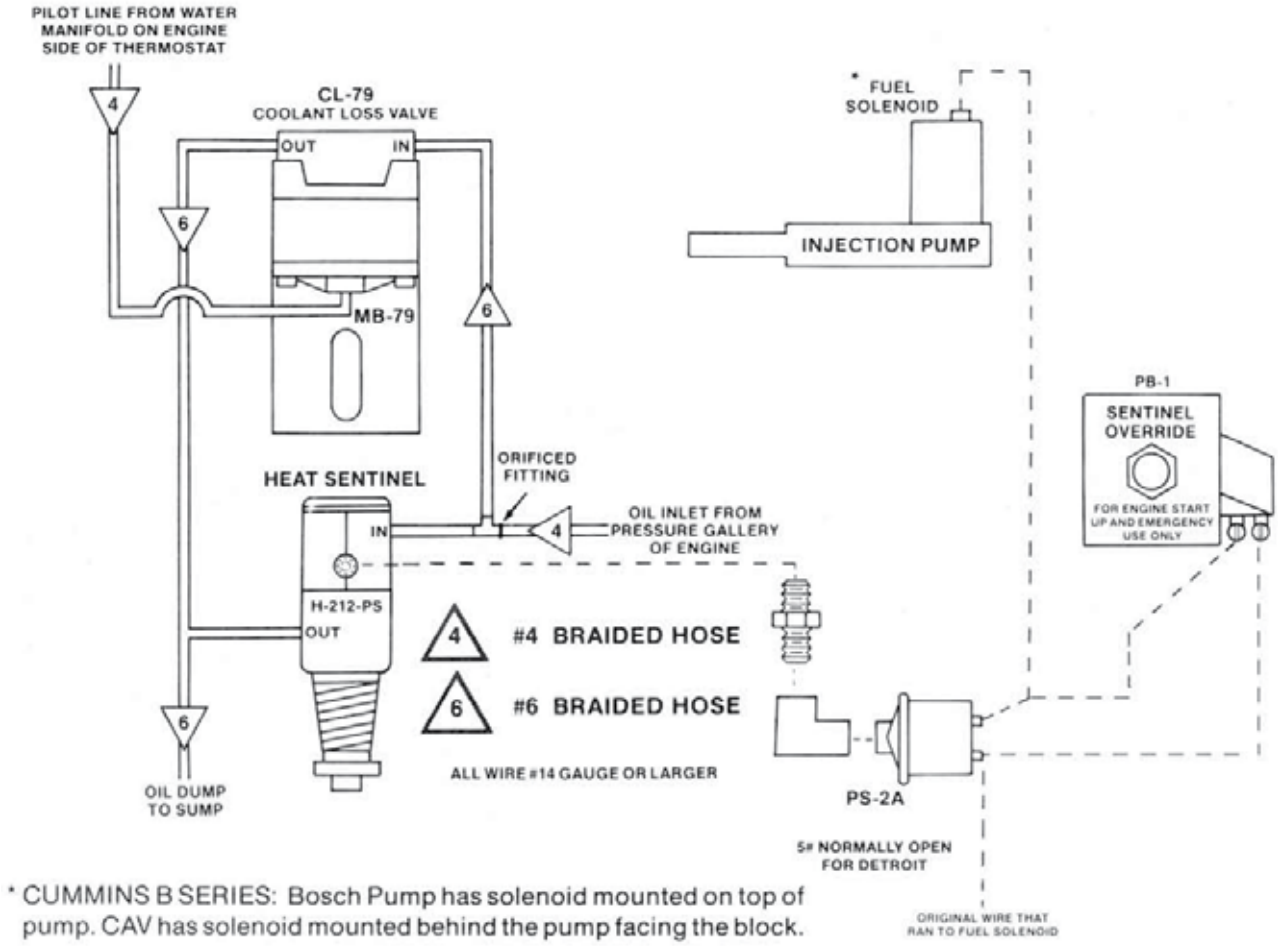

Important: Proper Installation Mandatory for Optimum Performance

Refer to Master Control Installation Instructors for additional information.

Use ONLY the water pick up point at $^1/_8$" Pipe Plug on top left side of water pump.

K

HK-CMNS

Deutz Application Guide

Find your engine and order one each of the listed components. See notes below.

Deutz	All 411 and 511 engines					
System Type	**Master Conttrol**	**Heat Sensor**	**Coolant pressure Valve**	**Mounting Brackets**	**Valves & Adapters**	**Hose & Fitting Kit**
Shutdown	D-15	HA-225	CPV	MB-1	40745, DZ-3A, 3A-1X, STV	HK-GU
All 1011, F2L912 and F4L-1011 engines						
Shutdown	D-15	HA-225	CPV	MB-1	40745, 3A-1X, STV	HK-GU
All 413, BF6L, FL-3, FL-4, FL-5, FL-6, FL-912 and FL-913 and 914 engines						
Shutdown	D-15	HA-225	CPV	MB-1	40745, DZ-4A, 3A-1X, STV	HK-GU

Notes: Engines below 180 GPH (approx. 2.85 GPM) fuel flow must use a D master control. Engines with fuel flow between 180 and 240 GPH (approx. 4 GPM) must use a DL master control. Engines with 240 GPH fuel flow, or higher, require two master controls. Standard SVK-1A override is 12 vdc. Order SVK-2A for 24 vdc applications. Hose and fitting kits include the most common components to fit most applications - additional components, if needed, are customer supplied. The STV self-venting test valve will aid in initial system test and assist with testing in the field, if necessary. Deutz engines: If belt protection is required, use XDV-1 dump valve installed in 2245062 Deutz mounting bracket

Questions? Contact Technical Support:
800 344 3286 or 209 521 7860 ext. 7555
e-mail: racortech@parker.com

HK-JD

John Deere

This HK-JD kit is specifically assembled for John Deere engines and includes the most common hose and fittings necessary to install a complete Sentinel engine protection system on any engine (see Application Guide for details). Depending on the application, this kit may include extra hose and fittings and some application-specific hose and fittings will be customer supplied.

John Deere Application Guide

Find your engine and order one each of the listed components. See notes below.

Deutz	All agricultural, construction and stationary equipment/engines					
System Type	**Master Conttrol**	**Heat Sensor**	**Coolant pressure Valve**	**Mounting Brackets**	**Valves & Adapters**	**Hose & Fitting Kit**
Shutdown	D-15	H-218	CPV	MB-1, MB-79	PR-60, STV	HK-JD

Notes: Engines below 180 GPH (approx. 2.85 GPM) fuel flow must use a D master control. Engines with fuel flow between 180 and 240 GPH (approx. 4 GPM) must use a DL master control. Engines with 240 GPH fuel flow, or higher, require two master controls. The STV test valve will aid in initial system test and assist with testing in the field, if necessary.

HK-JD

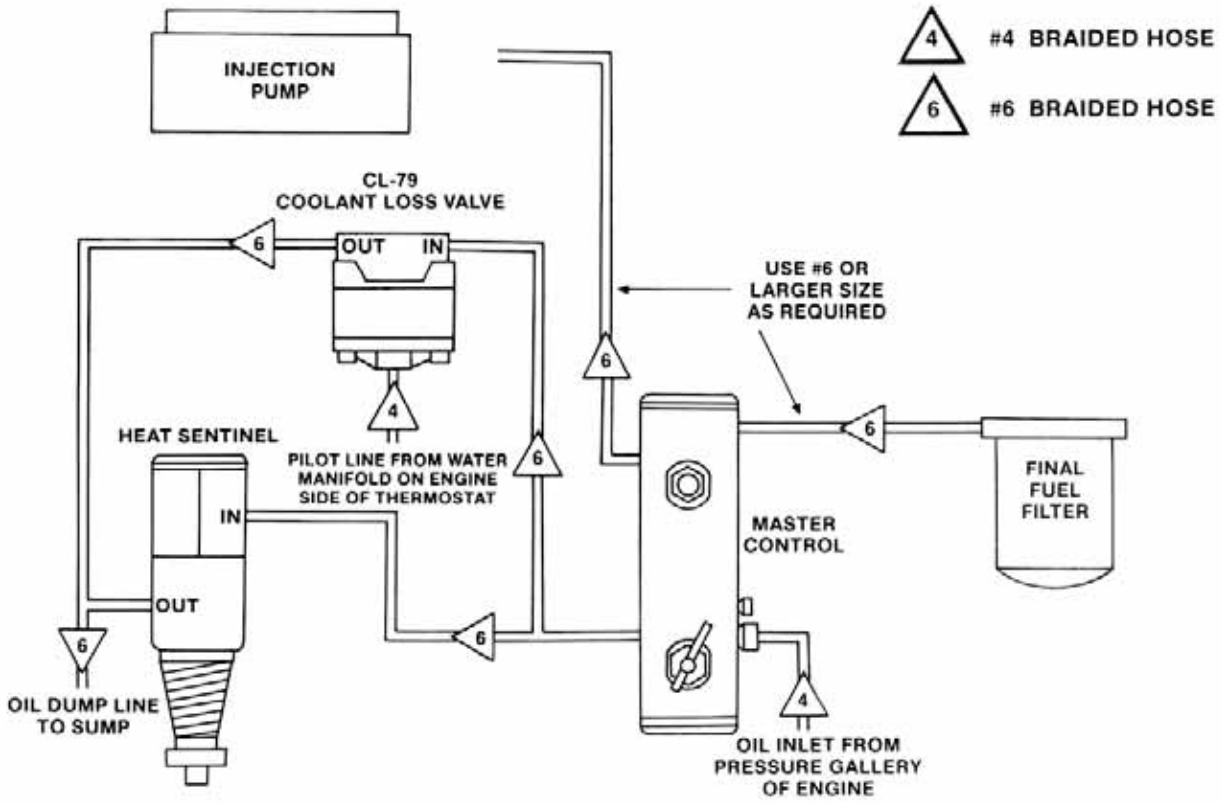

Important: Proper Installation Mandatory for Optimum Performance

Refer to Master Control Installation Instructors for additional information.

HK-JD

For All John Deere

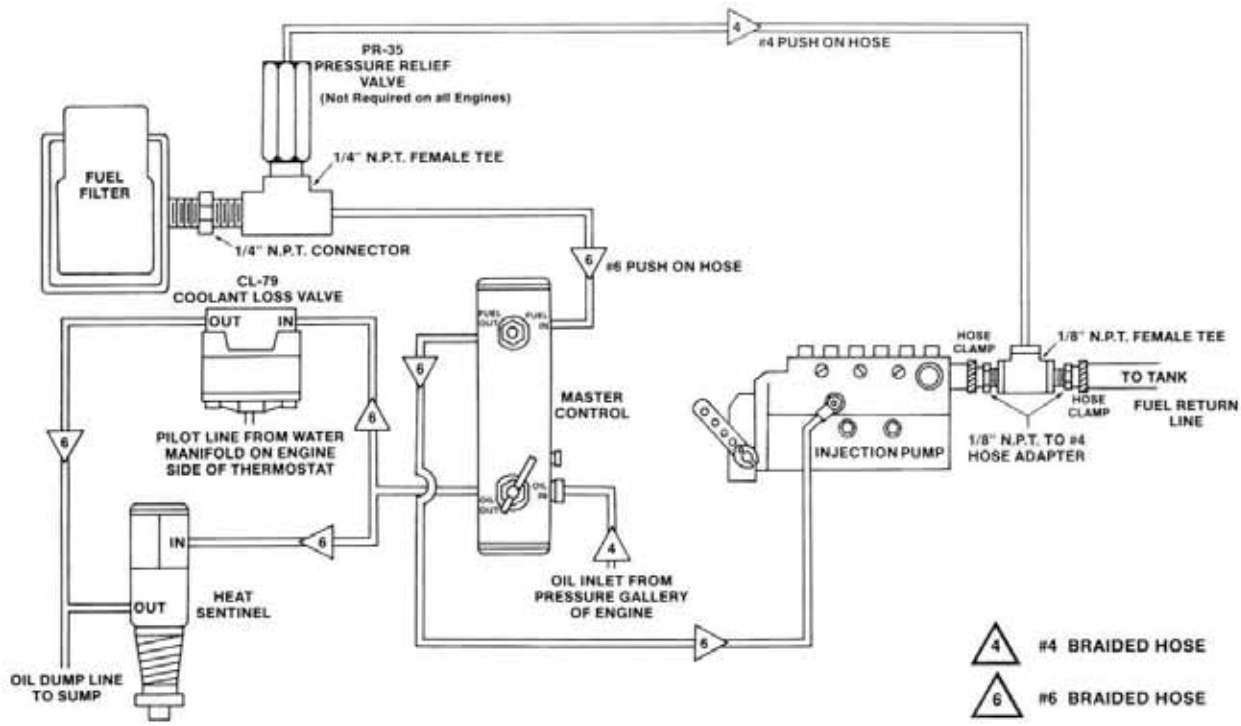

Important: Proper Installation Mandatory for Optimum Performance
Refer to Master Control Installation Instructors for additional information.

K

HK-DDC

Detroit Diesel Hose Kits

This HK-DDC kit is specifically assembled for Detroit Diesel engines and includes the most common hose and fittings necessary to install a complete Sentinel engine protection system on any engine (see Application Guide for details). Depending on the application, this kit may include extra hose and fittings and some application-specific hose and fittings will be customer supplied.

Detroit Diesel Application Guide

Find your engine and order one each of the listed components. See notes below.

Detroit Diesel	3-53, 4-53, 6-53, 2-71, 3-71, 4-71 and 6-71 in-line engines, 6V-53, 8V-53, 6V-71, 8V-71, 12V-71, 6V-92 and 6110					
System Type	**Master Conttrol**	**Heat Sensor**	**Coolant pressure Valve**	**Mounting Brackets**	**Valves & Adapters**	**Hose & Fitting Kit**
Shutdown	D-5	HA-212	CPV	MB-1, MB-79	STV	HK-DDC
De-Torque	DTF-5	HA-212	CPV	MB-1, MB-79	STV	HK-DDC
Shutdown with Override	D-5 with SVK-1A	HA-212	CPV	MB-1, MB-79	STV	HK-DDC
All Series 40 engines						
Shutdown	D-5Y	H-212	CPV	MB-1, MB-79	41737, STV	HK-DDC
De-Torque	DTF-5Y	H-212	CPV	MB-1, MB-79	41737, STV	HK-DDC
Shutdown with Override	D-5Y with SVK-1A	H-212	CPV	MB-1, MB-79	41737, STV	HK-DDC
All 8-71 engines with electrical shut-off						
Electrical Shutdown	N/A	H-218PS	CPV	MB-79	LB-1, PB-1, PS-1A, D-25-F4, PS-2A	N/A

Notes: Engines below 180 GPH (approx. 2.85 GPM) fuel flow must use a D master control. Engines with fuel flow between 180 and 240 GPH (approx. 4 GPM) must use a DL master control. Engines with 240 GPH fuel flow, or higher, require two master controls. Standard SVK--1A override is 12 vdc. Order SVK--2A for 24 vdc applications. The STV test valve will aid in initial system test and assist with testing in the field.

Questions? Contact Technical Support:
800 344 3286 or 209 521 7860 ext. 7555
e-mail: racortech@parker.com

HK-DDC

Detroit Diesel Hose Kits

This HK-DDC kit is specifically assembled for Detroit Diesel engines and includes the most common hose and fittings necessary to install a complete Sentinel engine protection system on any engine (see Application Guide for details). Depending on the application, this kit may include extra hose and fittings and some application-specific hose and fittings will be customer supplied.

Detroit Diesel Application Guide

Find your engine and order one each of the listed components. See notes below.

Detroit Diesel	All 16V-71, 12V-92 and 16V-92 engines					
System Type	**Master Conttrol**	**Heat Sensor**	**Coolant pressure Valve**	**Mounting Brackets**	**Valves & Adapters**	**Hose & Fitting Kit**
Shutdown	D-5	H-212	CPV	MB-1, MB-79	STV	HK-DDC
De-Torque	DTF-5	H-212	CPV	MB-1, MB-79	STV	HK-DDC
Shutdown with Override	D-5 with SVK-1A	H-212	CPV	MB-1, MB-79	STV	HK-DDC
	All 12V-149 and 16V-149 engines					
Shutdown	DL-5	H-212	CPV	MB-1, MB-79	STV	HK-DDC
De-Torque	DTLF-5	H-212	CPV	MB-1, MB-79	STV	HK-DDC
Shutdown with Override	DL-5 with SVK-1A	H-212	CPV	MB-1, MB-79	STV	HK-DDC

Notes: Engines below 180 GPH (approx. 2.85 GPM) fuel flow must use a D master control. Engines with fuel flow between 180 and 240 GPH (approx. 4 GPM) must use a DL master control. Engines with 240 GPH fuel flow, or higher, require two master controls. Standard SVK--1A override is 12 vdc. Order SVK--2A for 24 vdc applications. The STV test valve will aid in initial system test and assist with testing in the field.

HK-DDC

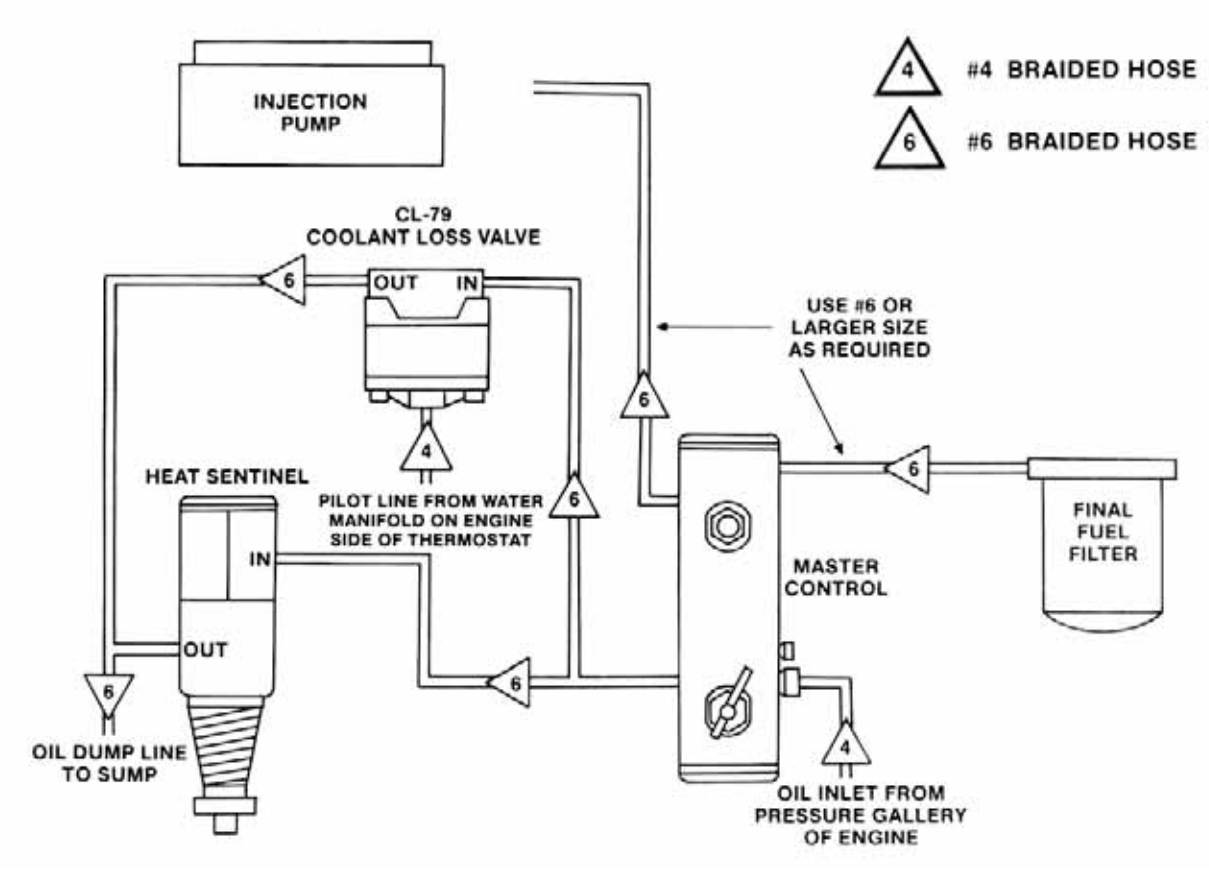

Important: Proper Installation Mandatory for Optimum Performance

Refer to Master Control Installation Instructors for additional information.

Detroit 6V, 8V & 12V Series Engines

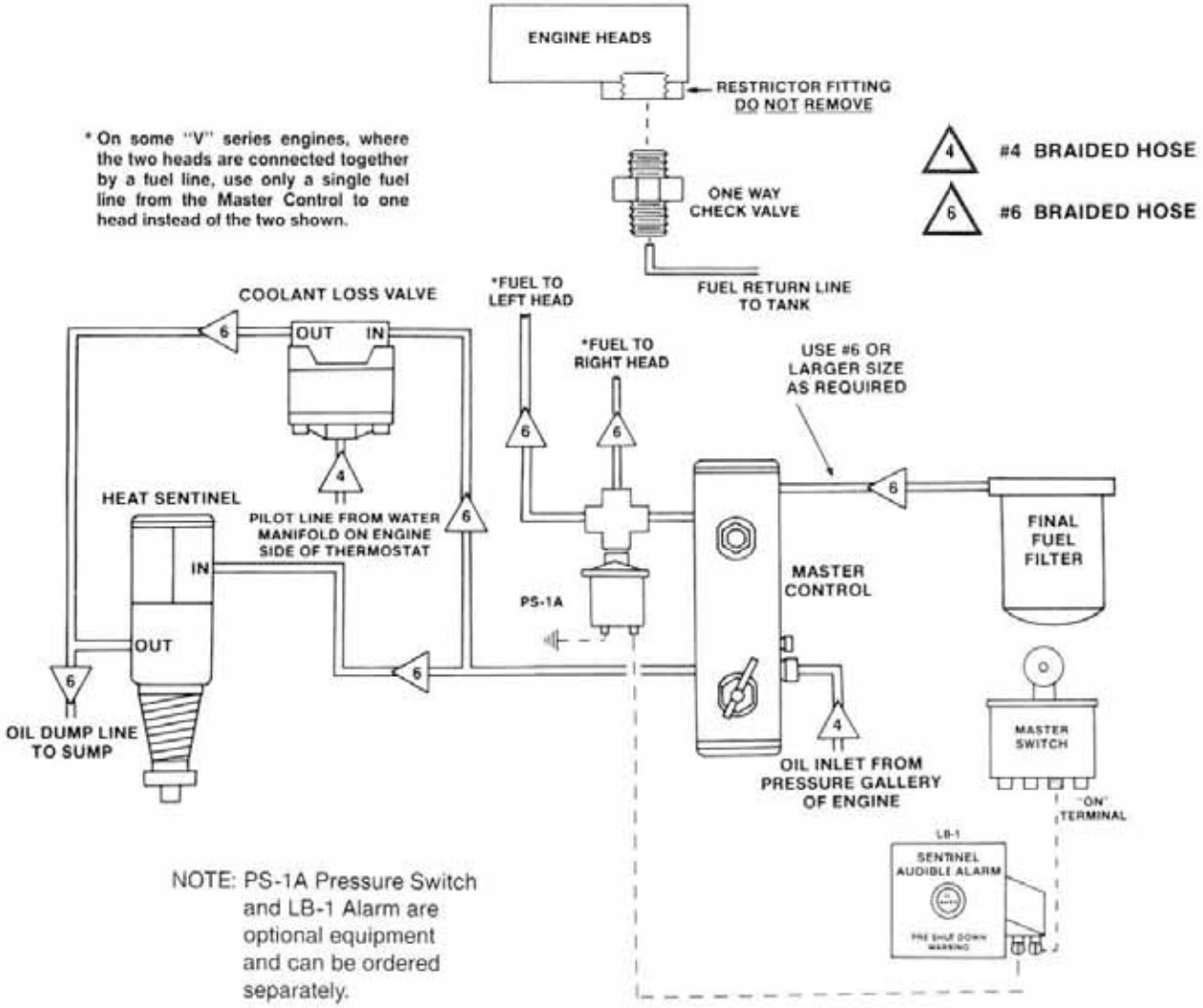

Important: Proper Installation Mandatory for Optimum Performance

Refer to Master Control Installation Instructors for additional information.

Questions? Contact Technical Support:
800 344 3286 or 209 521 7860 ext. 7555
e-mail: racortech@parker.com

HK-DDC

Detroit Inline 2-71, 3-53, 3-71, 4-53, 4-71, 6-53 & 6-71 Series Engines

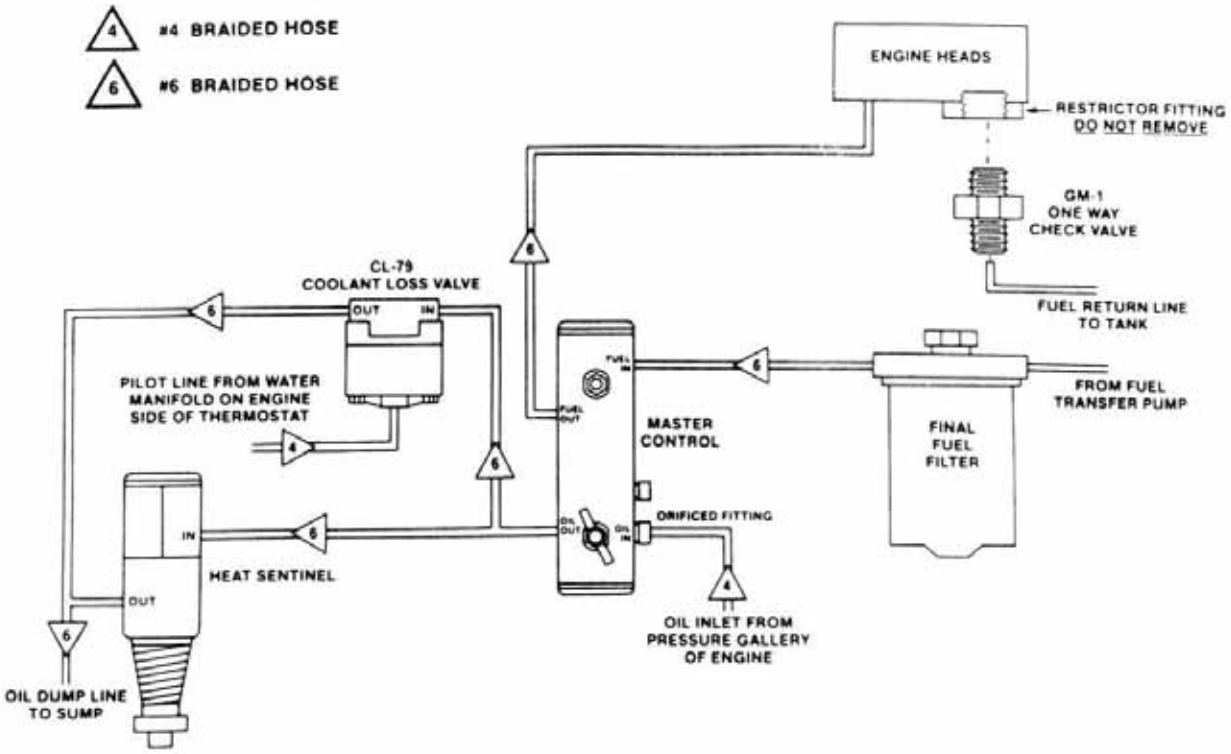

Important: Proper Installation Mandatory for Optimum Performance

Refer to Master Control Installation Instructors for additional information.

Questions? Contact Technical Support:
800 344 3286 or 209 521 7860 ext. 7555
e-mail: racortech@parker.com

HK-DDC

Detroit Inline w/PV-4 2-71, 3-53, 3-71, 4-53, 4-71, 6-53 & 6-71 Series Engines

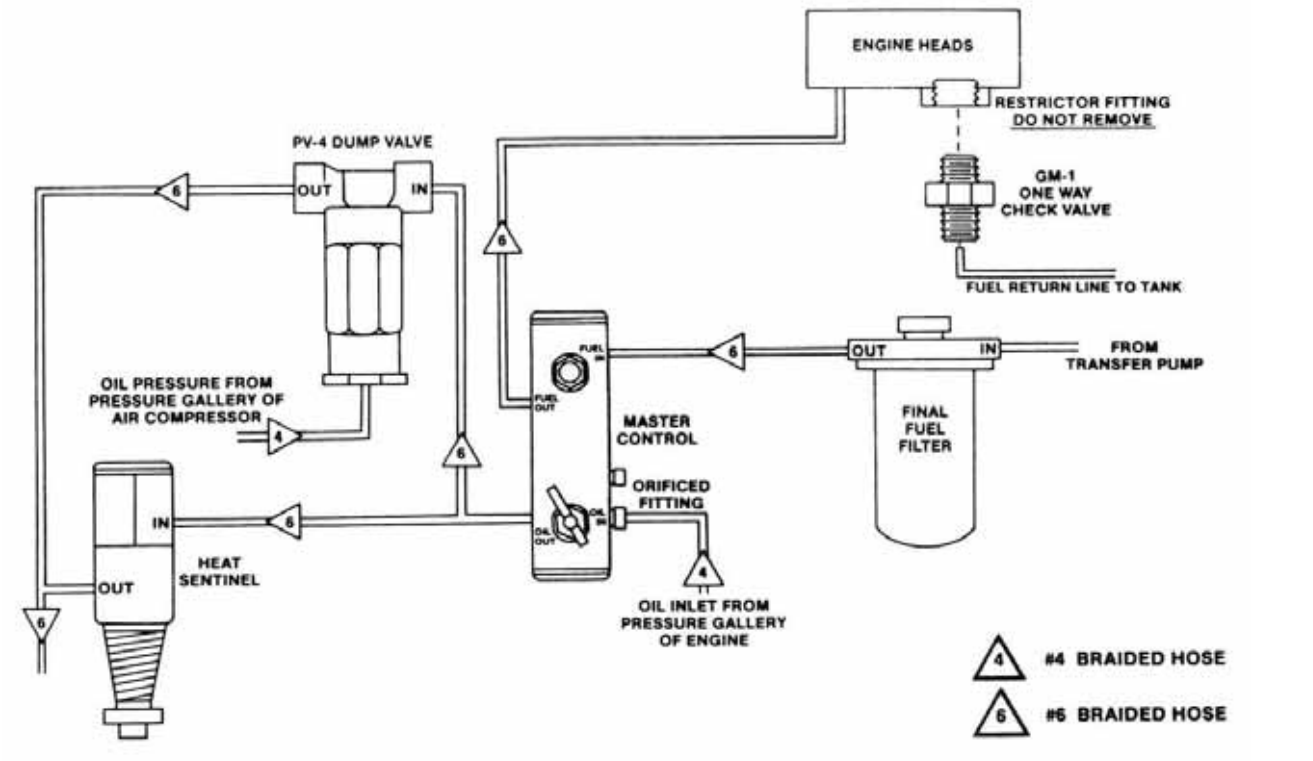

Important: Proper Installation Mandatory for Optimum Performance

Refer to Master Control Installation Instructors for additional information.

K

HK-GU

General Use Hose Kits

This HK-GU (General Use) kit includes the most common hose and fittings necessary to install a complete Sentinel engine protection system on any engine (see Application Guide for details). Depending on the application, this kit may include extra hose and fittings and some application-specific hose and fittings will be customer supplied.

Application Guide

Find your engine and order one each of the listed components. See notes below.

Allis Chalmers	All In-line and V Series engines					
System Type	**Master Conttrol**	**Heat Sensor**	**Coolant pressure Valve**	**Mounting Brackets**	**Valves & Adapters**	**Hose & Fitting Kit**
Shutdown	D-10	H-212	CPV	MB-1, MB-79	STV	HK-GU
De-Torque	DTF-10	H-212	CPV	MB-1, MB-79	STV	HK-GU
Shutdown with Override	D-10 with SVK-1A	H-212	CPV	MB-1, MB-79	STV	HK-GU

Case	504 engine and 300 HP Scania engine 674T with Bosch injection Pump, Tractors: 970, 1070, 1170, 1175, 1220, 1370, 1570, 2090, 2290, 2390, 2590, 2670, 2870, 4490, 4690 and 4890					
Shutdown	D-15	HA-212	CPV	MB-1, MB-79	STV	HK-GU

Fairmont Tamper	All Engines					
Shutdown with Override	D-5Y with SVK-1A	H-212	CPV	MB-1, MB-79	40748, PR-60, STV	HK-GU

Fiat	All 8360.05 (160 HP), 8220.02 (200 HP), MZ900 and M2900 engines					
Shutdown	D-10	HA-212	CPV	MB-1, MB-79	STV	HK-GU
De-Torque	DTF-10	HA-212	CPV	MB-1, MB-79	STV	HK-GU
Shutdown with Override	D-10 with SVK-1A	HA-212	CPV	MB-1, MB-79	STV	HK-GU

Notes: Engines below 180 GPH (approx. 2.85 GPM) fuel flow must use a D master control. Engines with fuel flow between 180 and 240 GPH (approx. 4 GPM) must use a DL master control. Engines with 240 GPH fuel flow, or higher, require two master controls. Standard SVK-1A override is 12 vdc. Order SVK-2A for 24 vdc applications. The STV test valve will aid in initial system test and assist with testing in the field.

Questions? Contact Technical Support:
800 344 3286 or 209 521 7860 ext. 7555
e-mail: racortech@parker.com

Application Guide

Find your engine and order one each of the listed components. See notes below.

Fiat Allis	All In-line and V Series engines					
System Type	**Master Conttrol**	**Heat Sensor**	**Coolant pressure Valve**	**Mounting Brackets**	**Valves & Adapters**	**Hose & Fitting Kit**
Shutdown	D-10	H-212	CPV	MB-1, MB-79	STV	HK-GU
De-Torque	DTF-10	H-212	CPV	MB-1, MB-79	STV	HK-GU
Shutdown with Override	D-10 with SVK-1A	H-212	CPV	MB-1, MB-79	STV	HK-GU

Ford	All 225, 2725, 6.2L, 6.9L and 7.3L engines					
Shutdown	D-15	HA-212	CPV	MB-1, MB-79	STV	HK-GU
De-Torque	DTF-15	HA-212	CPV	MB-1, MB-79	STV	HK-GU
Shutdown with Override	D-15 with SVK-1A	HA-212	CPV	MB-1, MB-79	STV	HK-GU

General Motors	All 225, 2725, 6.2L, 6.9L and 7.3L engines					
Shutdown	D-15	H-212	CPV	MB-1, MB-79	PR-60, STV	HK-GU
De-Torque	DTF-15	H-212	CPV	MB-1, MB-79	PR-60, STV	HK-GU
Shutdown with Override	D-15 with SVK-1A	H-212	CPV	MB-1, MB-79	PR-60, STV	HK-GU

Notes: Engines below 180 GPH (approx. 2.85 GPM) fuel flow must use a D master control. Engines with fuel flow between 180 and 240 GPH (approx. 4 GPM) must use a DL master control. Engines with 240 GPH fuel flow, or higher, require two master controls. Standard SVK-1A override is 12 vdc. Order SVK-2A for 24 vdc applications. The STV test valve will aid in initial system test and assist with testing in the field.

HK-GU

Application Guide

Find your engine and order one each of the listed components. See notes below.

Hino	All EH-100 and EH-200 engines					
System Type	**Master Conttrol**	**Heat Sensor**	**Coolant pressure Valve**	**Mounting Brackets**	**Valves & Adapters**	**Hose & Fitting Kit**
Shutdown	D-5Y	HA-212	CPV	MB-1, MB-79	STV	HK-GU
De-Torque	DTF-5Y	HA-212	CPV	MB-1, MB-79	STV	HK-GU
Shutdown with Override	D-5Y with SVK-1A	HA-212	CPV	MB-1, MB-79	STV	HK-GU

Hyundai	All 6D125-1 engines					
Shutdown with Override	D-10 with SVK-1A	H-212	CPV	MB-1, MB-79	STV	HK-GU

International Harvester	All 200 Series, 268, 303, 310, 414, 414T, 436, 466, 466T, 510 payloaders up thru 550, 800T, 817B, 817C, 9.0L, DT-366, DT-408, DT-466HT, DT-530 late models, backhoes, and crawler tractors TD-7 thru TD-20					
Shutdown	D-15	H-212	CPV	MB-1, MB-79	STV	HK-GU
De-Torque	DTF-15	H-212	CPV	MB-1, MB-79	STV	HK-GU
Shutdown with Override	D-15 with SVK-1A	H-212	CPV	MB-1, MB-79	STV	HK-GU
	All DT-466 engines					
Shutdown	D-5Y	H-212	CPV	MB-1, MB-79	STV	HK-GU
De-Torque	DTF-5Y	H-212	CPV	MB-1, MB-79	STV	HK-GU
Shutdown with Override	D-5Y with SVK-1A	H-212	CPV	MB-1, MB-79	STV	HK-GU

Notes: Engines below 180 GPH (approx. 2.85 GPM) fuel flow must use a D master control. Engines with fuel flow between 180 and 240 GPH (approx. 4 GPM) must use a DL master control. Engines with 240 GPH fuel flow, or higher, require two master controls. Standard SVK-1A override is 12 vdc. Order SVK-2A for 24 vdc applications. The STV test valve will aid in initial system test and assist with testing in the field.

Questions? Contact Technical Support:
800 344 3286 or 209 521 7860 ext. 7555
e-mail: racortech@parker.com

Application Guide

Find your engine and order one each of the listed components. See notes below.

Isuzu	All engines					
System Type	**Master Conttrol**	**Heat Sensor**	**Coolant pressure Valve**	**Mounting Brackets**	**Valves & Adapters**	**Hose & Fitting Kit**
Shutdown	D-15	HA-212	CPV	MB-1, MB-79	STV	HK-GU
Shutdown with Override	D-15 with SVK-1A	HA-212	CPV	MB-1, MB-79	STV	HK-GU

Komatsu	All D-155 and D-355 engines					
Shutdown	D-10	H-212	CPV	MB-1, MB-79	STV	HK-GU
De-Torque	DTF-10	H-212	CPV	MB-1, MB-79	STV	HK-GU
Shutdown with Override	D-10 with SVK-1A	H-212	CPV	MB-1, MB-79	STV	HK-GU

Kubota	All engines					
Shutdown	D-15	HA-212	CPV	MB-1, MB-79	STV	HK-GU
Shutdown with Override	D-15 with SVK-1A	HA-212	CPV	MB-1, MB-79	STV	HK-GU

Lister	All HR-1, HR-2, HR-3, HR-4, 6 cylinder and TR engines					
Shutdown	D-15	HA-225	N/A	MB-1	STV	N/A

Lombardini	All HR-1, HR-2, HR-3, HR-4, 6 cylinder and TR engines					
Shutdown	D-15	HA-225	N/A	MB-1	STV	N/A

Notes: Engines below 180 GPH (approx. 2.85 GPM) fuel flow must use a D master control. Engines with fuel flow between 180 and 240 GPH (approx. 4 GPM) must use a DL master control. Engines with 240 GPH fuel flow, or higher, require two master controls. Standard SVK-1A override is 12 vdc. Order SVK-2A for 24 vdc applications. The STV test valve will aid in initial system test and assist with testing in the field.

HK-GU

Application Guide

Find your engine and order one each of the listed components. See notes below.

Mack	All engines					
System Type	**Master Conttrol**	**Heat Sensor**	**Coolant pressure Valve**	**Mounting Brackets**	**Valves & Adapters**	**Hose & Fitting Kit**
Shutdown	D-15	H-212	CPV	MB-1, MB-79	PR-60, STV	HK-GU
De-Torque	DTF-15	H-212	CPV	MB-1, MB-79	PR-60, STV	HK-GU
Shutdown with Override	D-15 with SVK-1A	H-212	CPV	MB-1, MB-79	PR-60, STV	HK-GU

Mack-Renault	All in-line engines					
Shutdown	D-15	HA-212	CPV	MB-1, MB-79	PR-60, STV	HK-GU
De-Torque	DTF-15	HA-212	CPV	MB-1, MB-79	PR-60, STV	HK-GU
Shutdown with Override	D-15 with SVK-1A	HA-212	CPV	MB-1, MB-79	PR-60, STV	HK-GU

Mitsubishi	E-70-B 4 cylinder (4032) and all engines up to 700 HP					
Shutdown	D-10	HA-218	CPV	MB-1, MB-79	STV	HK-GU
De-Torque	DTF-10	HA-218	CPV	MB-1, MB-79	STV	HK-GU
Shutdown with Override	D-10 with SVK-1A	HA-218	CPV	MB-1, MB-79	STV	HK-GU

Perkins	All in-line and V Series engines					
Shutdown	D-15	HA-212	CPV	MB-1, MB-79	STV	HK-GU
Shutdown with Override	D-15 with SVK-1A	HA-212	CPV	MB-1, MB-79	STV	HK-GU

Notes: Engines below 180 GPH (approx. 2.85 GPM) fuel flow must use a D master control. Engines with fuel flow between 180 and 240 GPH (approx. 4 GPM) must use a DL master control. Engines with 240 GPH fuel flow, or higher, require two master controls. Standard SVK-1A override is 12 vdc. Order SVK-2A for 24 vdc applications. The STV test valve will aid in initial system test and assist with testing in the field.

Questions? Contact Technical Support:
800 344 3286 or 209 521 7860 ext. 7555
e-mail: racortech@parker.com

Application Guide

Find your engine and order one each of the listed components. See notes below.

Scania	All engines					
System Type	**Master Conttrol**	**Heat Sensor**	**Coolant pressure Valve**	**Mounting Brackets**	**Valves & Adapters**	**Hose & Fitting Kit**
Shutdown	D-15	H-212	CPV	MB-1, MB-79	PR-60, STV	HK-GU
Shutdown with Override	D-15 with SVK-1A	H-212	CPV	MB-1, MB-79	PR-60, STV	HK-GU

Superior	All engines					
Shutdown	DL-10	H-212	CPV	MB-1, MB-79	STV	HK-GU

	All in-line engines					
Shutdown	D-15	HA-212	CPV	MB-1, MB-79	STV	HK-GU
Shutdown with Override	D-15 with SVK-1A	HA-212	CPV	MB-1, MB-79	STV	HK-GU

Waukesha	All L5792 engines					
Shutdown	DL-10	H-212	CPV	MB-1, MB-79	STV	HK-GU

Yanmar	All 4T95J engines					
Shutdown	D-15	HA-212	CPV	MB-1, MB-79	STV	HK-GU
Shutdown with Override	D-15 with SVK-1A	HA-212	CPV	MB-1, MB-79	STV	HK-GU

Notes: Engines below 180 GPH (approx. 2.85 GPM) fuel flow must use a D master control. Engines with fuel flow between 180 and 240 GPH (approx. 4 GPM) must use a DL master control. Engines with 240 GPH fuel flow, or higher, require two master controls. Standard SVK-1A override is 12 vdc. Order SVK-2A for 24 vdc applications. The STV test valve will aid in initial system test and assist with testing in the field.

HK-GU

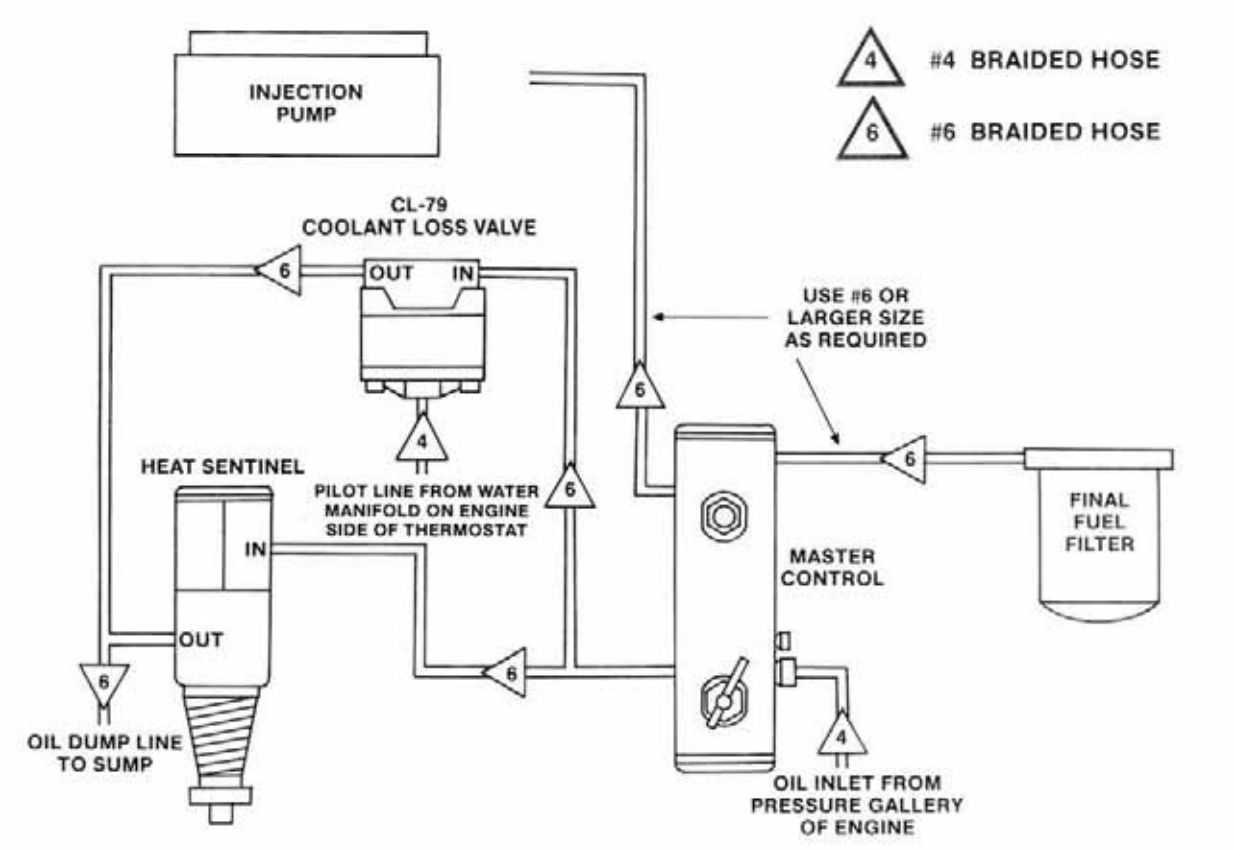

Important: Proper Installation Mandatory for Optimum Performance

Refer to Master Control Installation Instructors for additional information.

HK-GU

Perkins Inline and V Series Engines

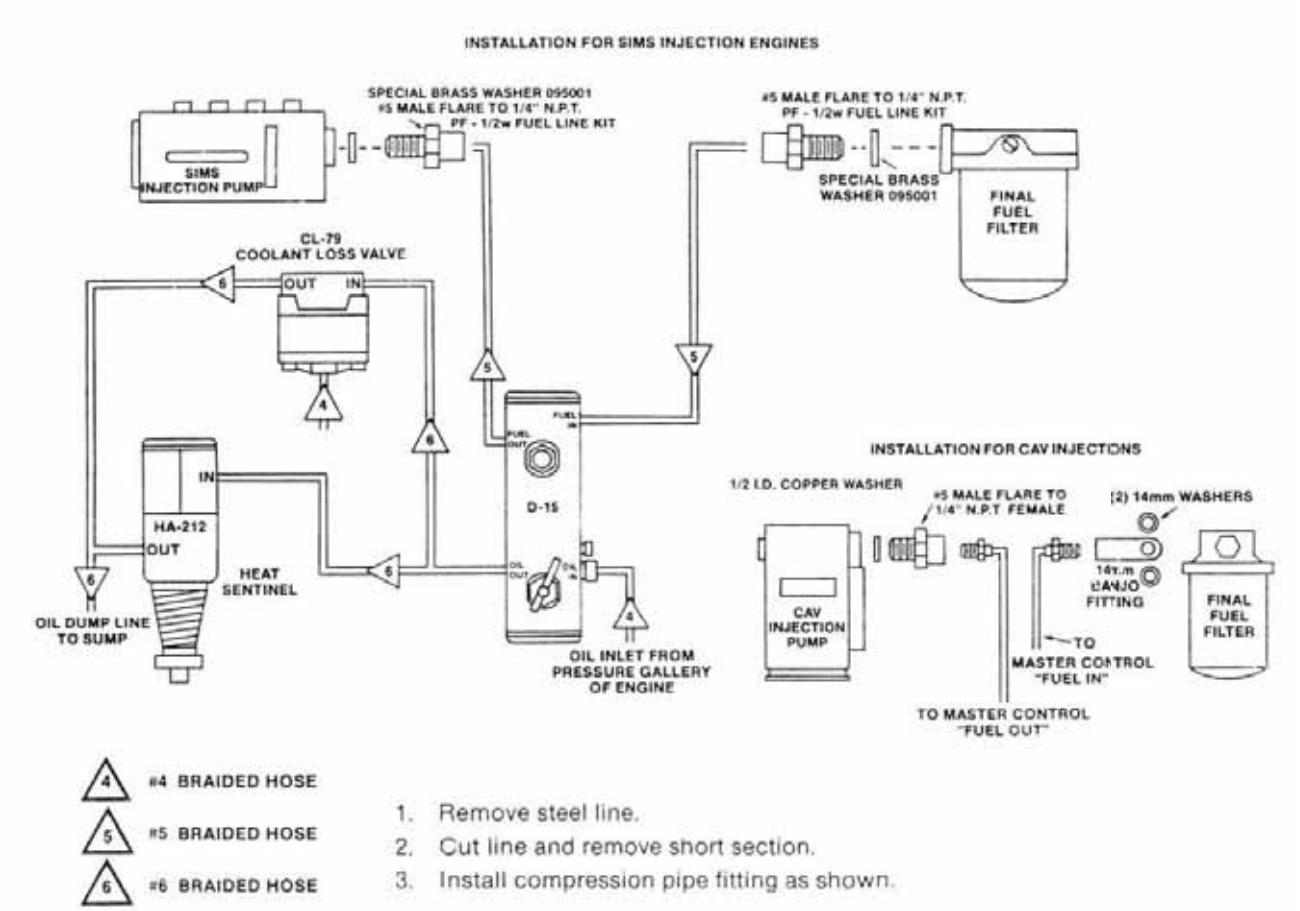

Important: Proper Installation Mandatory for Optimum Performance

Refer to Master Control Installation Instructors for additional information.

K

HK-GU

Komatsu D-155 & D355 Engines

PARTS LIST

A) Master Control

OPTIONS

(1)	D-10V	(No Manual Override at Control). *Shown in Drawing*
(2)	D-10	With D4-2 & D4-4 Caps (Full Power Override at Control)
(3)	DTF-10V	With FO-1-K Fuel Orifice (No Manual Override at Control)
(4)	DTF-10	With D4-2 Cap and FO-1-K (Full Power Manual Override at Control)

(B)	H-212	Heat Sentinel 212° F
(C)	CL-79	Coolant Loss Valve
(D)	SVK-1	Fuel Solenoid Valve with FO-1-D Fuel Orifice Installed
(E)	MB-1	Mounting Bracket for Master Control
(F)	MB-79	Mounting Bracket for Coolant Loss Valve
(G)	LB-1	Light Buzzer
(H)	PS-1	10# Pressure Switch

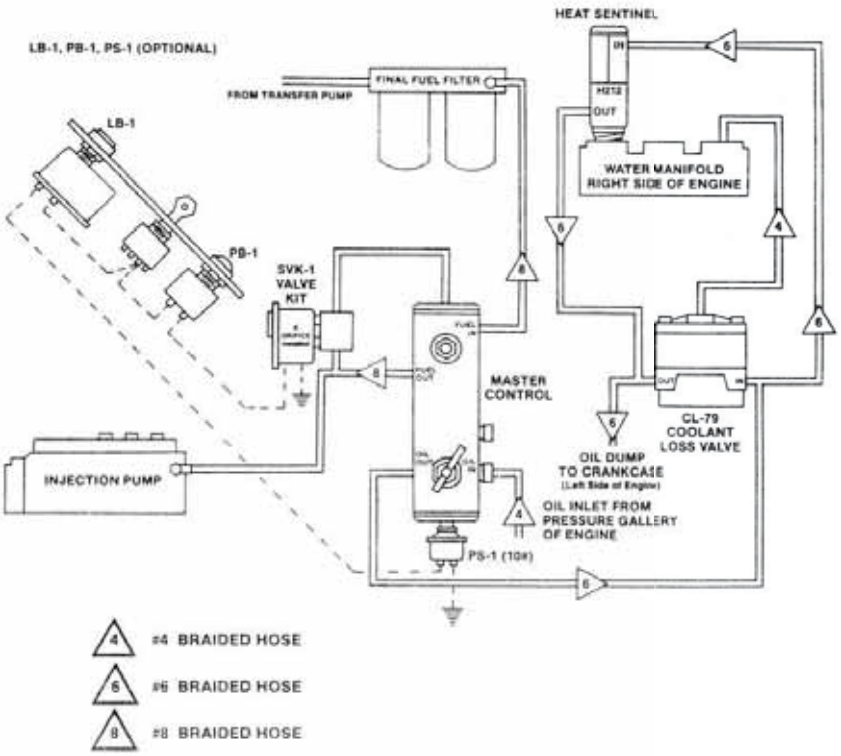

Important: Proper Installation Mandatory for Optimum Performance

Refer to Master Control Installation Instructors for additional information.

Notes:

1. Mount Master Control below Fuel Filter Air Intake Manifold using MB-1 Mounting Bracket. Bracket should be bent 90˚.
2. Coolant Loss Valve can be mounted 12" to the right of Master Control using bolt in Air intake manifold. MB-79 Mounting Bracket should be bent 90˚.

HK-GU

International Harvester Engines

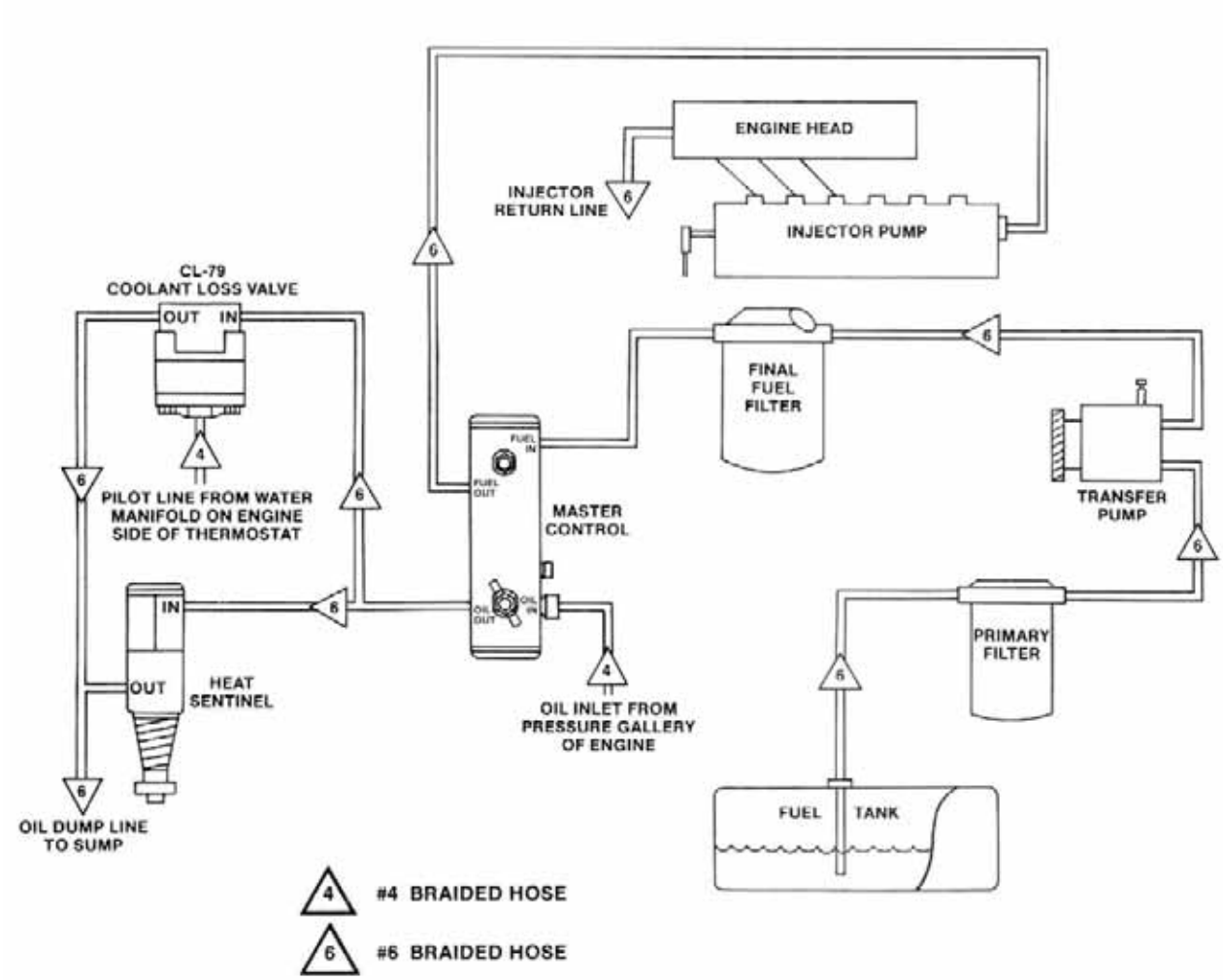

Important: Proper Installation Mandatory for Optimum Performance

Refer to Master Control Installation Instructors for additional information.

K

HK-GU

International 817C Engines DT 466
PR-90 Pressure Relief Valve

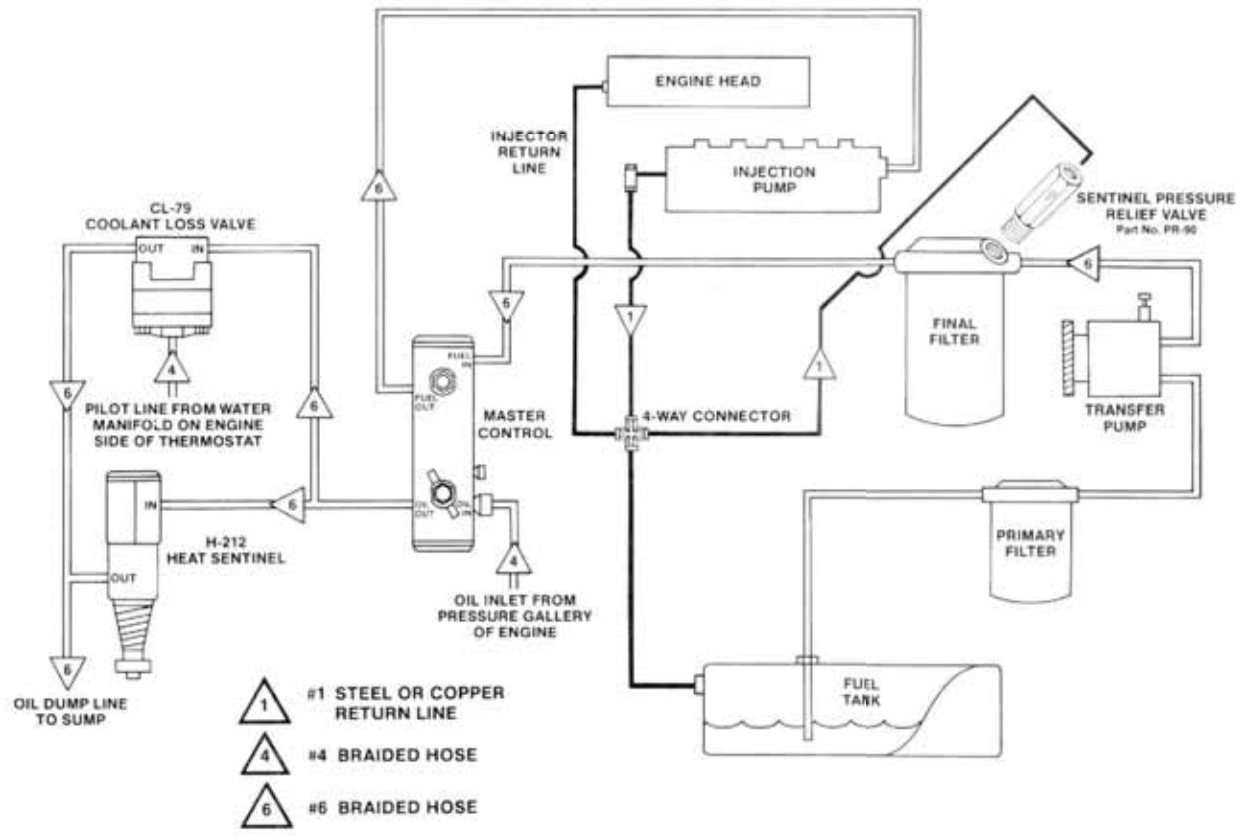

Important: Proper Installation Mandatory for Optimum Performance

Refer to Master Control Installation Instructors for additional information.

Notes:

The PR-90 Pressure Relief valve must be installed between the Master Control and Transfer Pump on all international engines that use **Piston Type** transfer pumps.

817C (C Series Engines will have serial numbers of 10,000 or higher) and the 573B are two samples that use this type of pump.

Questions? Contact Technical Support:
800 344 3286 or 209 521 7860 ext. 7555
e-mail: racortech@parker.com

HK-GU

Mack, Mack Renault, Scania & Volvo Engines

1. Using the MB-1 Mounting Bracket, mount the Master Control in a convenient location between the fuel inlet of the injection pump and final fuel filter.
2. Install the Heat Sentinel in the 1/2" NPT opening in the thermostat housing. Other openings in the water manifold, engine block or engine head are available, also if the 1/2" NPT opening in the thermostat housing is not available.
3. Mount the CL-79 Coolant Loss Valve at any convenient location at approximately the same height as the engine head. Pilot line pickup point is any opening in the water manifold.
4. Install a fitting that will accept a #6 hose end at any non-pressure opening in the crankcase. A 3/8" NPT opening on the left side of the engine block, just above the oil pan, is usually used for the dump point.
5. For oil pressure to the Master Control use one of the following pickup points:
   a. main oil pressure gallery opening in injection pump
   b. 3/8" NPT oil pressure opening in injection pump
   c. 3/8" NPT oil pressure opening in oil filter housing

NOTE: Do not tee into oil pressure line that feeds an accessory

6. Remove the fuel line that runs from the final fuel filter to the inlet of the injection pump. Make up two new #6 fuel lines and plumb as shown. Plumb remaining lines and check system as described on installation sheet furnished with Master Control.

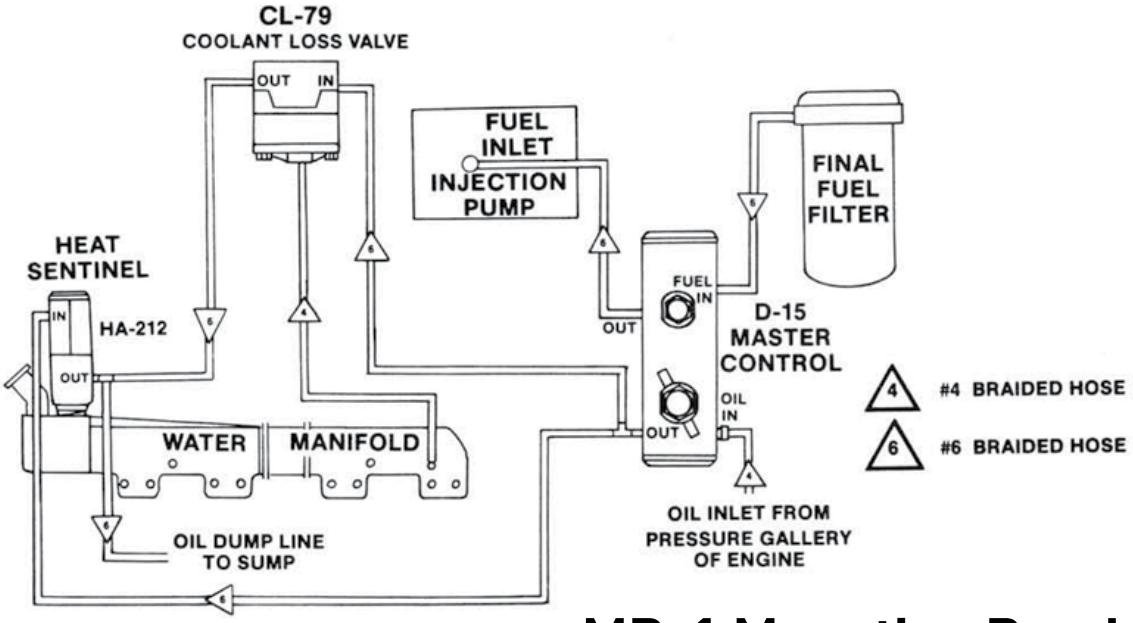

MB-1 Mounting Bracket

Important: Proper Installation Mandatory for Optimum Performance

Refer to Master Control Installation Instructors for additional information.

Questions? Contact Technical Support:
800 344 3286 or 209 521 7860 ext. 7555
e-mail: racortech@parker.com

Part Number Index

4

PRODUCT	PAGE#
40819	K9
41728	K9
43572	K9
40810	K9
40836	K9
41752	K9
43008	K9
43009	K9
43010	K9
43011	K9
43012	K9
43013	K9
43020	K9
43501	K9
43502	K9
43504	K9
43595	K9
43597	K9
43598	K9
43599	K9
43601	K9
43602	K9
43603	K9
43704	K9
43705	K9
49000	K9

7

PRODUCT	PAGE#
7330	K9

A

PRODUCT	PAGE#
AG-1	K9

C

PRODUCT	PAGE#
CPV	K12

D

PRODUCT	PAGE#
D-10	K3
D-10V	K3
D-15	K3
D-15V	K3
D-20	K3
D-20V	K3
D-25	K3
D-5	K3
D-5V	K3
D-5Y	K3
DL-10	K6
DL-15	K6
DL-20	K6
DL-5	K6
DL-5Y	K6
DTF-10	K7
DTF-10V	K7
DTF-15	K7
DTF-20	K7
DTF-25	K7
DTF-5	K7
DTF-5V	K7
DTF-5Y	K7
DTLF-10	K8
DTLF-15	K8
DTLF-20	K8
DTLF-5	K8
DTLF-5Y	K8

Questions? Contact Technical Support:
800 344 3286 or 209 521 7860 ext. 7555
e-mail: racortech@parker.com

F

PRODUCT	PAGE#
FO-1-A	K5
FO-1-B	K5
FO-1-C	K5
FO-1-D	K5
FO-1-E	K5
FO-1-F	K5
FO-1-G	K5
FO-1-H	K5
FO-1-I	K5
FO-1-J	K5
FO-1-K	K5

H

PRODUCT	PAGE#
H-180	K11
HA-180	K11

L

PRODUCT	PAGE#
LP-149	K14
LP53-71	K14
LP-92	K14

P

PRODUCT	PAGE#
PR-35	K15
PS-1	K15
PS-1A	K15
PS-2	K15
PS-2A	K15
PV4-15	K14
PV4-50	K14

S

PRODUCT	PAGE#
SK49012	K9
SK49013	K9
SK49014	K9
SK49015	K9
SP-1	K9
STV	K13
SV-4-12	K10
SV-4-24	K10
SVK-1	K10
SVK-1A	K10
SVK-2	K10
SVK-2A	K10

W

PRODUCT	PAGE#
WK-1A	K12
WK-1B	K12

Section: L
Heaters

aerospace
climate control
electromechanical
filtration
fluid & gas handling
hydraulics
pneumatics
process control
sealing & shielding

Parker Racor

ENGINEERING YOUR SUCCESS.

Table of Contents

Fuel Heaters L1
Nomad® Electric Heaters L2
Nomad® Coolant Heaters L4
Thermoline™ Electric Heaters L6
Heater Relay L8
Part Number Index L9

Fuel Heaters

From the very beginning Racor delivered high quality products. Extreme conditions call for extreme protection and performance. Racor delivers the goods.

Application

The diesel fuel heaters apply heat to the fuel incoming from the fuel tank to enable it to flow more freely on its way to the primary fuel filter/water separator.

Heating Fuel

Heating the fuel dissolves paraffin wax crystals (and ice) that form when diesel fuel is chilled thus enabling water separators to work more efficiently and to prevent fuel filters from plugging with wax and/or ice crystals.

Biodiesel Information

Biodiesel is a diesel fuel produced by the chemical refining of vegetable oils into “fatty acid methyl esters”, or FAME. Glycerin is removed in the refining process, lowering the oil viscosity to match diesel fuel. Pure biodiesel is most often added to diesel fuel in a 2, 5, or 20% blend, and is referred to as B2, B5, or B20 respectively.

Other renewable “biofuels” available are raw oils or recycled greases that have not been transformed into biodiesel. These products require extra heat, filtration, and other vehicle modifications to burn in diesel engines.

Two Types Available

Electric Heated: The electrical heaters use vehicle electrical power to operate the heating elements.

Coolant Heated: The coolant heaters use hot engine coolant as a heat source and transfer that heat to the fuel.

Nomad™ Coolant Heater

Thermoline™ Heater

Nomad™ Electric Heater

L

Nomad™ Electric Heaters

Nomad™ Electric Heaters Overview

Specifications	14278	14279	14257	14261
Engine HP.	up to 200	up to 200	200 - 300	200 - 300
Power Output	300 watts	300 watts	500 watts	500 watts
Voltage	12 vdc	24 vdc	12 vdc	24 vdc
Amperes Draw	21.4	10.7	35.7	17.9
Alternator Rating[1]	65	40	75	45
Internal Thermostat	Yes	Yes	In-cab control	In-cab control
Fuel Port Size	7/8”-14 SAE	7/8”-14 SAE	7/8”-14 SAE	7/8”-14 SAE
Coolant Port Size	N/A	N/A	N/A	N/A
Height	2.6 in. (6.6 cm)	2.6 in. (6.6 cm)	2.6 in. (6.6 cm)	2.6 in. (6.6 cm)
Width	5.8 in. (14.7 cm)	5.8 in. (14.7 cm)	5.8 in. (14.7 cm)	5.8 in. (14.7 cm)
Depth	5.4 in. (13.7 cm)	5.4 in. (13.7 cm)	5.4 in. (13.7 cm)	5.4 in. (13.7 cm)
Weight (dry)	1.7 lbs (0.8 kg)	1.7 lbs (0.8 kg)	1.7 lbs (0.8 kg)	1.7 lbs (0.8 kg)

For operating temperatures, refer to the specific unit page that follows.

[1] For on-highway trucks, assuming all tractor lights and blowers are on. Use of more accessories will require a higher rating.

Test Data

These results are from controlled laboratory test. Field results may vary

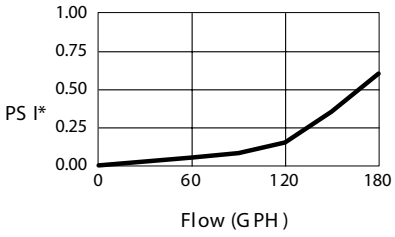

SAE J905 Fuel Flow Restriction
Given: Fuel temperature 70°F
(_F – 32 X .555 _€)

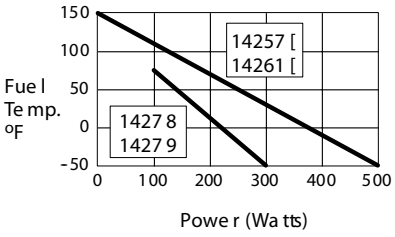

Typical Power Consumption
[In-cab control units.
Not thermostatically controlled.

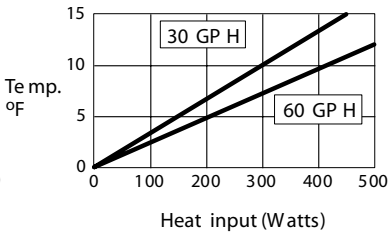

Typical Heat Rise
Given: Heat input (based on fuel temperature in the line) and Flow Rate (of the fuel based on engine speed & type).

* PSI X 2.036 = inHg. / PSI X 6.895 = kPa

Questions? Contact Technical Support:
800 344 3286 or 209 521 7860 ext. 7555
e-mail: racortech@parker.com

Nomad™ Electric Heaters

How to Order

(The numbers below show how part numbers are constructed).

14278[1] 14279[1]	14257[2] 14261[2]
Up to 200 HP, 300 Watts Aluminum die-cast body and high impact glass-filled nylon cover. Internal automatic thermostat controlled. Fittings and mounting hardware included.	200 to 300HP, 500 Watts Aluminum die-cast body and high impact glass-filled nylon cover. Fittings and mounting hardware included.

[1] Optional relay kit RK11861 (12vdc) or RK11862 (24vdc) may be required, not included.
[2] Controlled by provided In-cab controller / relay RK14280-12 (12vdc) or RK14280-24 (24vdc).

Mounting Information

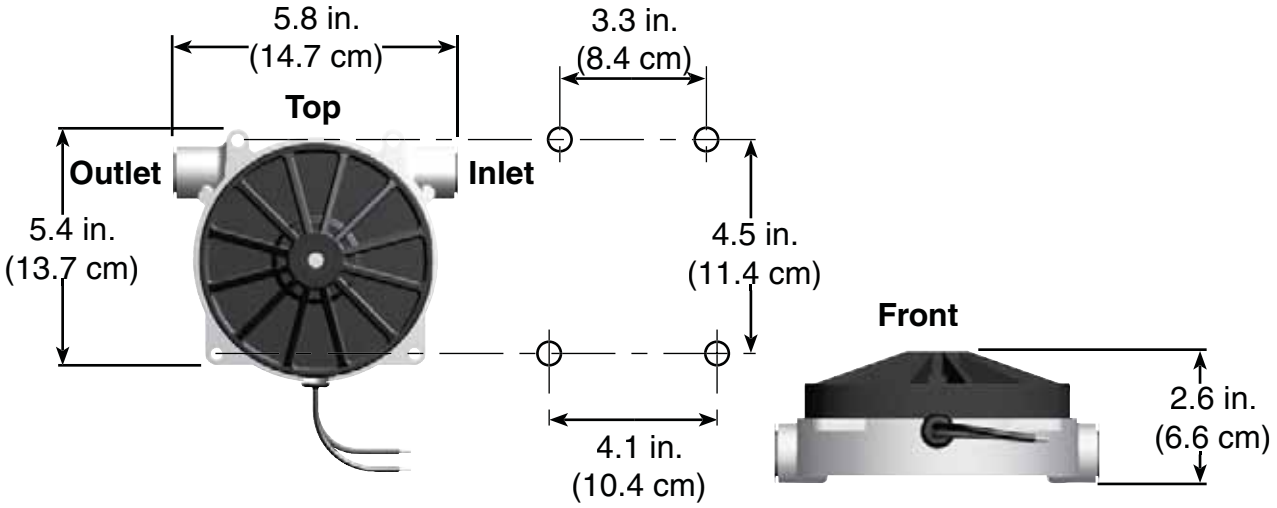

All mounting holes are 0.25 inches

CAUTION! Never apply power to heater without fuel in it!

TO TEST: With or without fuel in system at ambient temperature, measure ohm resistance between the two power hook-up wires. The exact reading will vary and any reading means the unit is functional. If there is an 'OL' (Open Line) reading on the ohm meter, the unit is defective.

Questions? Contact Technical Support:
800 344 3286 or 209 521 7860 ext. 7555
e-mail: racortech@parker.com

Nomad™ Coolant Heaters

Nomad™ Coolant Heaters Overview

Specifications	320HTR4	320HTR4T
Engine HP.	up to 300	up to 200
Power Output	N/A	N/A
Voltage	N/A	N/A
Amperes Draw	N/A	N/A
Alternator Rating	N/A	N/A
Internal Thermostat	No	Yes
Fuel Port Size	7/8-14	3/8 NPT
Coolant Port Size	5/8” ID Hose	5/8” ID Hose
Height	3.8 in. (9.7 cm)	3.8 in. (9.7 cm)
Width	3.9 in. (9.9 cm)	3.9 in. (9.9 cm)
Depth	4.7 in. (11.9 cm)	4.7 in. (11.9 cm)
Weight (dry)	2.1 lbs (1.2 kg)	3.0 lbs (1.4 kg)

For operating temperatures, refer to the specific unit page that follows.

Test Data

These results are from controlled laboratory test. Field results may vary

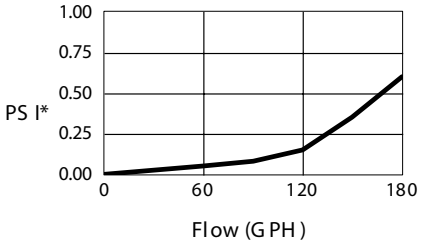

SAE J 905 Fuel Flow Restriction
Given: Fuel temperature 70°F.
(_F – 32 X .555 =_C)

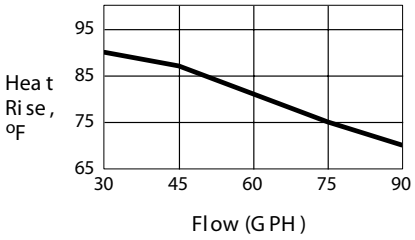

Typical Flow vs Heat Rise
Given: Fuel inlet temperature, 70°F.
Coolant inlet temperature, +180°F.

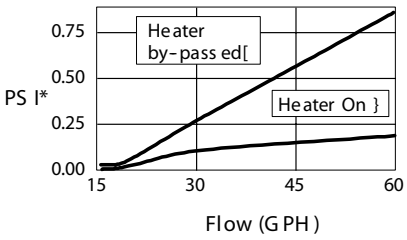

Typical Differential Pressure vs Flow
[Given: Fuel inlet temperature is +85°F (320HTR4 T.)
} Given: Fuel inlet temperature is +40°F, Heater on.

* PSI X 2.036 = inHg. / PSI X 6.895 = kPa

Questions? Contact Technical Support:
800 344 3286 or 209 521 7860 ext. 7555
e-mail: racortech@parker.com

Nomad™ Coolant Heaters

How to Order

(The numbers below show how part numbers are constructed).

320HTR4	T
Basic Model: Coolant heat exchanger type unit. Use with engines up to 300 horsepower. Aluminum die-cast body and plated steel coolant heat exchanger. Accepts 5/8" I.D. coolant hoses. Mounting bracket and hardware included.	**Optional Automatic Thermostat:** Specify **T** for this option, only. Installed by the factory, when the fuel temperature is below 60° F, the thermostat is open to heat fuel. As the fuel temperature approaches 80° F the thermostat closes, allowing the fuel to by-pass the heat exchanger.

Mounting Information

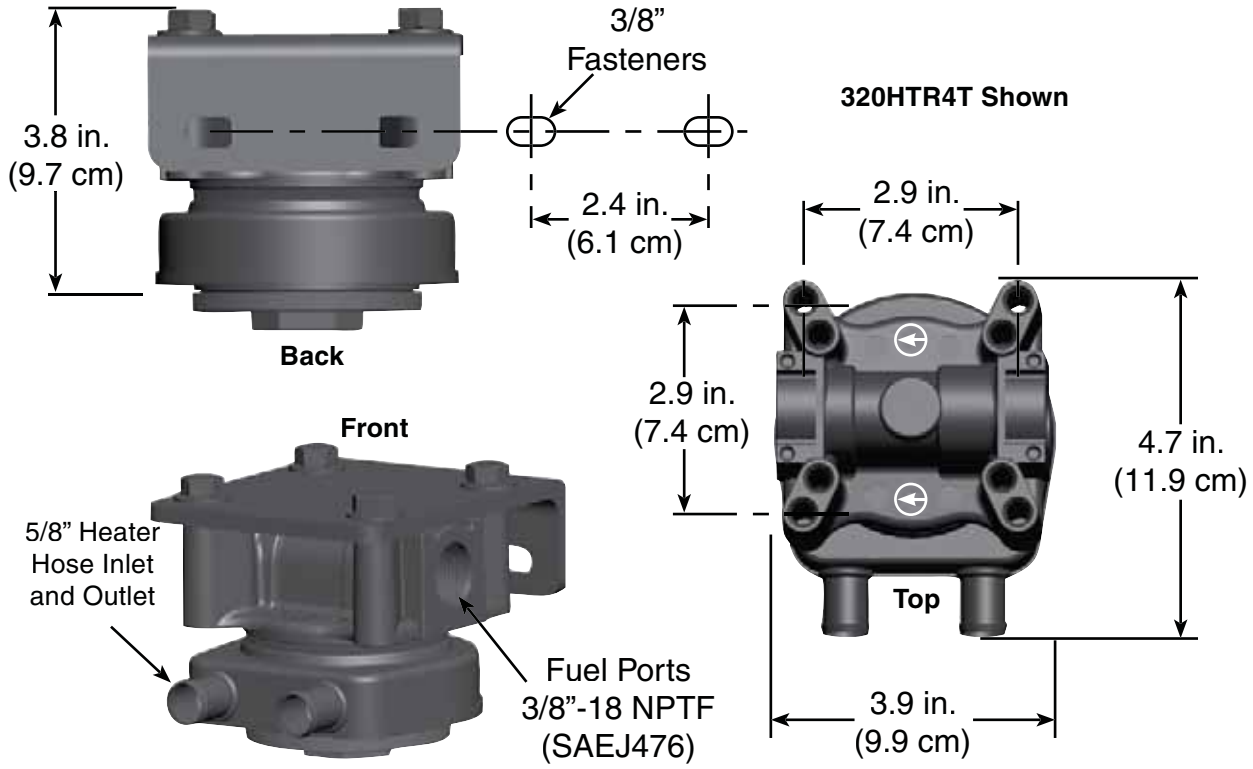

L

Thermoline™ Electric heaters

Thermoline™ Electric heaters Overview

Specifications	HEATER300	HEATER500
Engine HP.	100-200	Over 200
Power Output	300	500
Voltage	12-24	12-24
Amperes Draw	21.4/10.7	35.7/17.9
Alternator Rating[1]	65/40	75/45
Internal Thermostat	In-cab	In-cab
Fuel Port Size[2]	7/8”-14 SEA	7/8”-14 SEA
Coolant Port Size	N/A	N/A
Height	N/A	N/A
Width	7.0 ft (2.1 m)	10.5 ft (3.2 m)
Depth	N/A	N/A
Weight (dry)	6.3 lbs (2.9 kg)	8.4 lbs (3.8 kg)

[1] For on-highway trucks, assuming all tractor lights and blowers are on. More accessories will require a higher rating.
[2] Thermoline™ fittings are 45° female swivel (SAEJ512). Do not adapt to JIC 37° fittings (SAEJ514).

Test Data

These results are from controlled laboratory test. Field results may vary

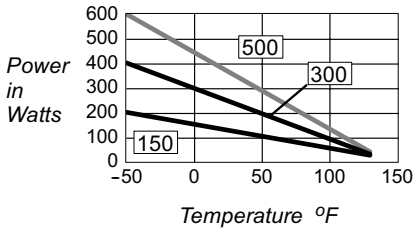

Typical Power Consumption
(Power output decreases as fuel temperature rises)
(_F - 32 X .555 =_C)

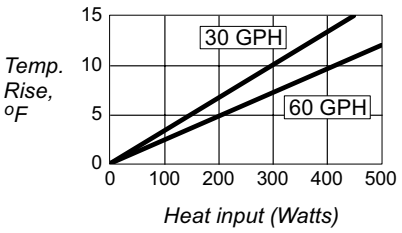

Typical Heat Rise
–All models.
Given: Heat input (based on fuel temp.in the line) and Flow Rate (of the fuel based on engine speed & type).

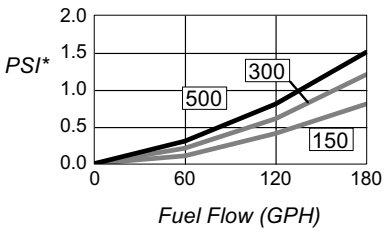

Typical Fuel
Flow Restriction
Given: Fuel temperature 70_F
** PSI X 2.036 = inHg.*
PSI X 6.895 = kPa

* PSI X 2.036 = inHg. PSI X 6.895 = kPa

Questions? Contact Technical Support:
800 344 3286 or 209 521 7860 ext. 7555
e-mail: racortech@parker.com

Thermoline™ Electric heaters

How to Order

(The numbers below show how part numbers are constructed).

Heater	300	12V
Basic Thermoline™ designation The unit uses 'oversize' No.10 high quality fuel hose with an internal heating element. The heater element is a conductive polymeric core extruded between two parallel copper bus wires and is infinitely temperature self-regulating. In-cab under-dash controller/relay (**RK 14280-12** or **-24**) is included.	**300:** Recommended for engines 100 to 200 horsepower. **500:** Recommended for engines over 200 horsepower.	**Specify Voltage:** **12V** for 12 volts. **24V** for 24 volts.

Wiring Diagram

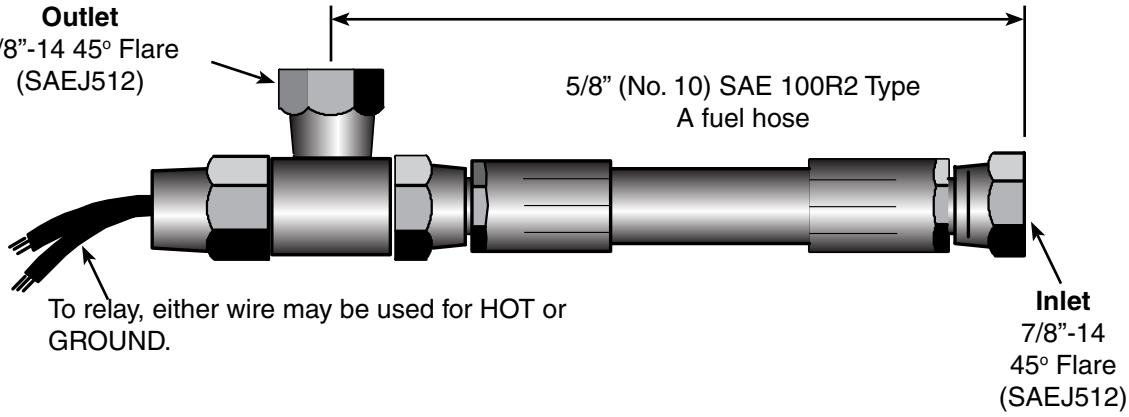

300/500 Models

Fuse Block Accessory (AC)
DC Voltage
Power Supplied By
Ignition Switch ON

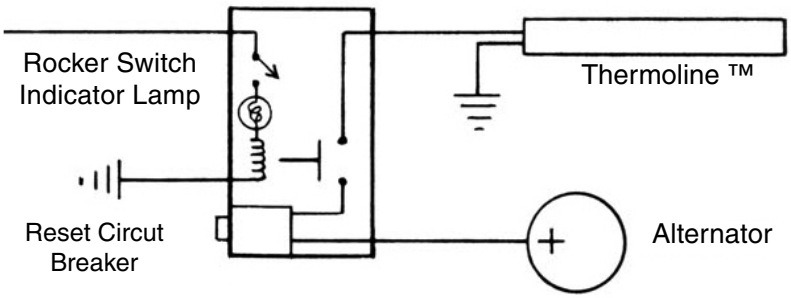

CAUTION! Never apply power to heater without fuel in it!

TO TEST: With or without fuel in system at ambient temperature, measure ohm resistance between the two power hook-up wires. The exact reading will vary and any reading means the unit is functional. If there is an 'OL' (Open Line) reading on the ohm meter, the unit is defective.

Questions? Contact Technical Support:
800 344 3286 or 209 521 7860 ext. 7555
e-mail: racortech@parker.com

Heater Relay

Heater Relay Kits

A Relay kit may be necessary when installing a Racor heater due to power demand. Standard OE fuses, wiring and alternators may be unable to carry the load without overheating or potential shorting, creating a serious condition.

RK11861 & RK11862
Heater Relay

RK14280-12 & **RK14280-24**
Heater Relay

Relay Information

Specifications	RK11861	RK11862	RK14280-12	RK14280-24
Application	DC	DC	DC	DC
Volts	12	24	12	24
Remote Mount	Yes	Yes	No	No
Max Watts/amps	300 or 25 amps	360 or 15 amps	N/A	N/A

Questions? Contact Technical Support:
800 344 3286 or 209 521 7860 ext. 7555
e-mail: racortech@parker.com

Part Number Index

1

PRODUCT	PAGE#
14257	L2
14261	L2
14278	L2
14279	L2

3

PRODUCT	PAGE#
320HTR4	L4
320HTR4T	L4

H

PRODUCT	PAGE#
HEATER300	L6
HEATER500	L6

R

PRODUCT	PAGE#
RK11861	L8
RK11862	L8
RK14280-12	L8
RK14280-24	L8

Section: M
Hydraulic Filtration

aerospace
climate control
electromechanical
filtration
fluid & gas handling
hydraulics
pneumatics
process control
sealing & shielding

Parker Racor

ENGINEERING YOUR SUCCESS.

Table of Contents

Parfit Hydraulic Filters M1
Part Number Index M13

ParFit™ Hydraulic Filters

ParFit™ Hydraulic Elements

Customer Value Proposition:

The competitively priced ParFit™ hydraulic filters are interchangeable with OEM and aftermarket filters to allow users to acquire all their replacement filters from one quality source. Racor ParFit™ hydraulic replacement filters conform to all the same rigorous tests as the standard replacement filters.

In addition to price and quality, the range of interchange filters available is key to a successful program for the user. Parker has worked diligently over the years to develop a range of filters that meet this challenge.

Problem:

Over 75% of all system failures are a direct result of contamination!

The cost due to contamination is staggering, resulting from:

- **Loss of production (downtime)**
- **Component replacement costs**
- **Frequent fluid replacement**
- **Costly disposal**
- **Increased overall maintenance costs**
- **Increased scrap rate**

Solution:

Racor ParFit™ hydraulic replacement filters were designed to filter contaminants in hydraulic fluid efficiently.

M

Questions? Contact Technical Support:
800 344 3286 or 209 521 7860 ext. 7555
e-mail: racortech@parker.com

Parker Racor

ParFit™ Hydraulic Filters

HF2 ELEMENTS

Key

15P = Pall 9020-4” and 8”
HF3 = Pall 9600-8”
HF4 = Schroeder K -9”, 18”, and 27”

Features:

Seals: Viton

End caps: Plated Steel or Nylon

Support Cylinder: Plated Steel

Filter Media: Microglass with Mesh Support

Part Number	Length	DIA A	DIA B
932611Q	4.50 in. (11.4 cm)	1.01 in. (2.6 cm)	1.75 in. (4.4 cm)
932617Q	8.26 in. (21.0 cm)	1.01 in. (2.6 cm)	1.75 in. (4.4 cm)

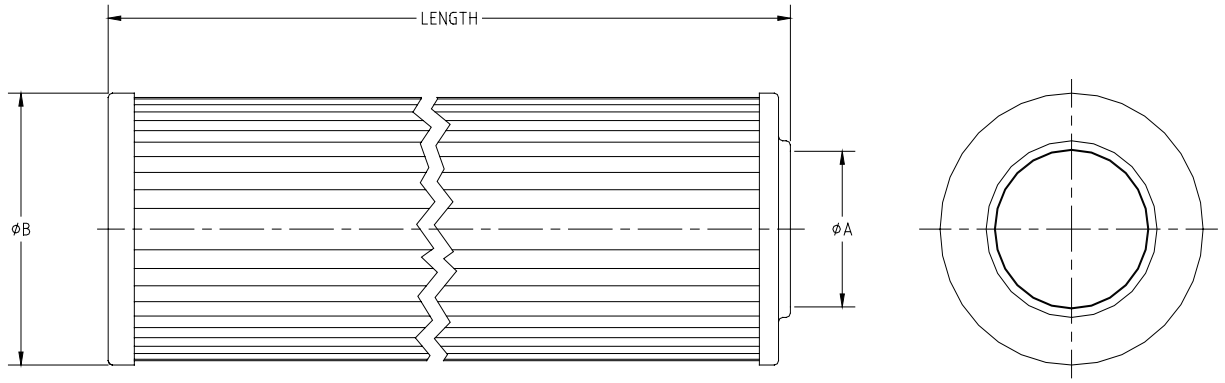

Questions? Contact Technical Support:
800 344 3286 or 209 521 7860 ext. 7555
e-mail: racortech@parker.com

ParFit™ Hydraulic Filters

HF3 Elements

Key

15P = Pall 9020-4” and 8”
HF3 = Pall 9600-8”
HF4 = Schroeder K -9”, 18”, and 27”

Features:

Seals: Viton

End caps: Plated Steel or Nylon

Support Cylinder: Plated Steel

Filter Media: Microglass with Mesh Support

Code	Length	DIA A	DIA B
8	8.3 in (21.0 cm)	1.7 in. (4.3 cm)	3.2 in. (8.1 cm)

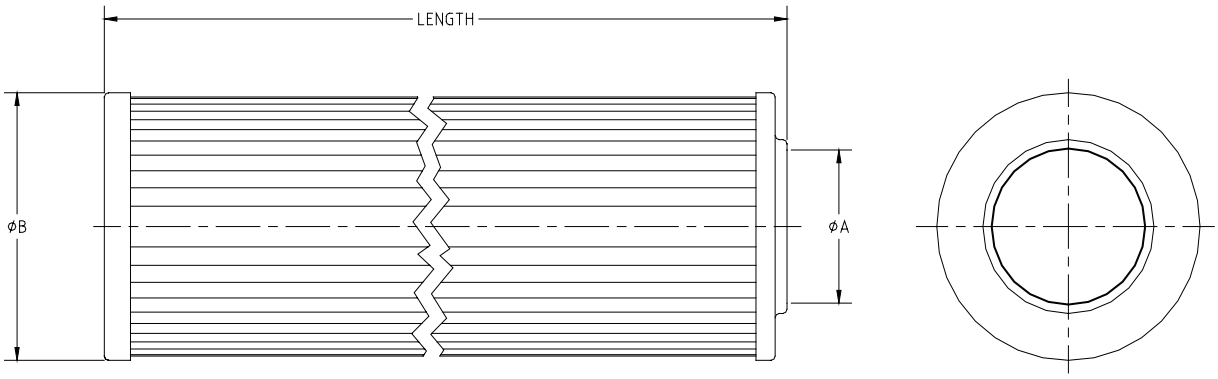

M

ParFit™ Hydraulic Filters

HF4 Elements

Key

15P = Pall 9020-4” and 8”
HF3 = Pall 9600-8”
HF4 = Schroeder K -9”, 18”, and 27”

Features:

Seals: Viton

End caps: Nylon

Support Cylinder: Plated Steel

Filter Media: Microglass with Mesh Support

Part Number	Length	DIA A	DIA B	COMMENTS
932670Q	9.2 in. (23.4 cm)	1.6 in. (4.1 cm)	3.9 in. (9.9 cm)	Double open ended
932679Q	18.0 in. (45.7 cm)	1.6 in. (4.1 cm)	3.9 in. (9.9 cm)	Double open ended
933488Q	27.8 in. (70.6 cm)	1.6 in. (4.1 cm)	3.9 in. (9.9 cm)	Double open ended

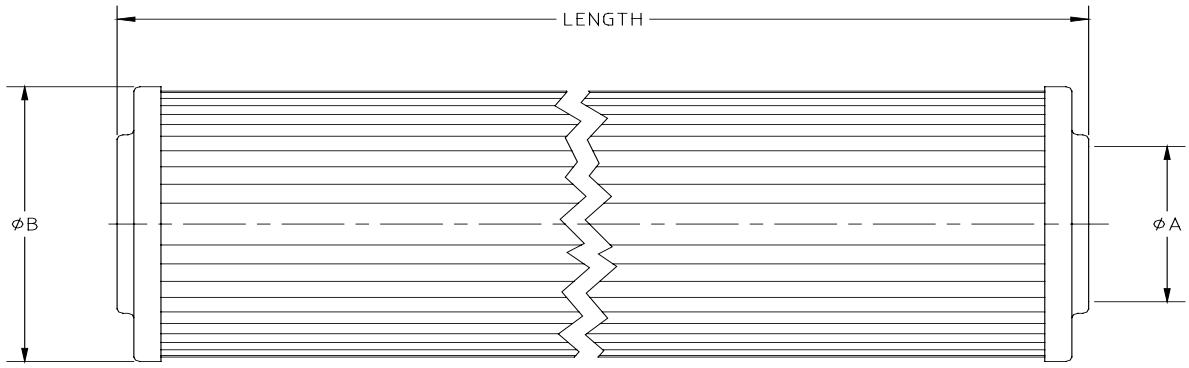

Questions? Contact Technical Support:
800 344 3286 or 209 521 7860 ext. 7555
e-mail: racortech@parker.com

ParFit™ Hydraulic Filters

Part Number Cross Reference Information

Racor	Pall	Schoeder	Hydac	I.D.	O.D.	Length
932612Q	HC9020FKS4H	SBF-9020-4Z10B	2060904			
926697Q	HC9600FKP8H	SBF-9600-8Z3B	2060599			
932618Q	HC9020FKS8H	SBF-9020-8Z10B	2060838			
930118Q	HC9600FKT8H	SBF-9600-8Z25B	2060602			
932670Q	-	KZ10	2060530			
932679Q	-	KKZ10	2060432			
930369Q	HC9020FKT4H	SBF-9020-4Z25B	2060905			
926835Q	HC9600FKS4H	SBF-9600-4Z10B	2060936			
932669Q	-	KZ5	2060529			
925582Q	HC9020FKP4H	SBF-9020-4Z3B	2060902			
926843Q	HC9600FKN8H	SBF-9600-8Z5B	2060600			
933246Q	HC9020FKN8H	SBF-9020-8Z5B	2060837			
932668Q	-	KZ3	2060528			
933239Q	HC9020FKN4H	SBF-9020-4Z5B	2060903			
925602Q	HC9020FKP8H	SBF-9020-8Z3B	2060836			
925520	-	K10	2058777			
930370Q	HC9020FKT8H	SBF-9020-8Z25B	2060839			
926841Q	HC9600FKN4H	SBF-9600-4Z5B	2060935			
932676Q	-	KZX10	-			
930099Q	HC9600FKT4H	SBF-9600-4Z25B	2060937			
933205Q	HC8900FKT13H	SBF-8900-13Z25B	2066677			
930194Q	HC9800FKT8H	SBF-9800-8Z25B	2060955			
927861Q	HC8300FKN8H	SBF-8300-8Z5V	-			
932874Q	HC8300/8310FKS39H	-	-			
926888Q	HC9600FKS16H	SBF-9600-16Z10B	2060617			
925773	-	K25	2058778			

M

ParFit™ Hydraulic Filters

Part Number Cross Reference Information

Racor	Pall	Schoeder	Hydac	I.D.	O.D.	Length
929099Q	HC8300FKT8H	SBF-8300-8Z25V	-			
927723Q	HC9021FDP8H	SBF-9021-8Z3B	2060797			
932873Q	HC8300/8310FKN39H	-	-			
935191	HC9801FDP4H	SBF-9801-4Z3B	2060767			
932685Q	-	KKZX10	2056633			
PR3088Q	-	-	0110D020BN-HC			
927176Q	HC9601FDP8H	SBF-9601-8Z3B	2060779			
935193	HC9801FDP8H	SBF-9801-8Z3B	2060933			
926698Q	HC9600FKP13H	SBF-9600-13Z3B	2060607			
931018Q	-	KZ20	-			
932872Q	HC8300/8310FKP39H	-	-			
932677Q	-	KKZ3	2060430			
933213Q	HC8900FKT16H	-	2062448			
R750-H-0806A	HC7500SKN8H	SBF-7500-8Z5B	-			
933044Q	HC8300/8310FKP16H	-	-			
926839Q	HC9600FKS13H	-	2060609			
927725Q	HC9021FDP4H	SBF-9021-4Z3B	2060860			
933196Q	HC8900FKT8H	SBF-8900-8Z25B	2066684			
934122Q	HC8314FKN39H	39QCLZ5V	2083926			
927182Q	HC9601FDP13H	SBF-9601-13Z3B	2062410			
925792	-	KK10	-			
935149	HC6400FKS26H	SBF-6400-26Z10B	1269045			
PR3033Q	-	SBF-0030D-Z10B	-			
926699Q	HC9600FKP16H	SBF-9600-16Z3B	2060615			

Questions? Contact Technical Support:
800 344 3286 or 209 521 7860 ext. 7555
e-mail: racortech@parker.com

ParFit™ Hydraulic Filters

Racor ParFit	Fleetguard	Baldwin	Wix	Pall	Schroeder	Hydac (Hycon)	Donaldson
925520	HF6110	PT707-HD10	51407		K10	2058777 HK010P	P163910 P167410
925773	HF6111	PT707-HD	51434		K25	HK020P	P167425
925792	HF7338	PT757-10	57180		KK10		P174243
926169	HF6710	BT-287 BT-287-10 BT387 BT387-10	51758			MFE160-10/2	P550388
935149	HF30325			HC6400FKS26H HC6400FKS26Z HC6400FDS26H HC6400FDS26Z HC6400FUS26H HC6400FUS26Z	SBF-6400-26Z10B	1269045	
935191	HF30613			HC9801FDP4H	SBF-9800-4S1B	2060767	P167270
935193	HF7510			HC9801FDP8H HC9801FDP8Z HC9801FKP8H	SBF-9801-8Z3B	2060933	P167414
925582Q	HF7040	H9041	57121	HC9020FDP4H HC9020FDP4Z HC9020FKP4H HC9020FKP4Z HC9020FUP4H HC9020FUP4Z	SBF-9020-4S1B	2060902 1.07.04D03BN H9020/4- 003BN	P169429
925602Q	HF7044	H9045	57857	HC9020FDP8H HC9020FDP8Z HC9020FKP8H HC9020FKP8Z HC9020FUP8H HC9020FUP8Z	SBF-9020-8Z3B	1.07.08D03BN H9020/8- 003BN	P167838
926697Q	HF7468	H9073	57849	HC9600FDP8H HC9600FDP8Z HC9600FKP8H HC9600FKP8Z HC9600FUP8H HC9600FUP8Z	SBF-9600-8S1B 8TS1 8TZ3	1.11.08D03BN H9600/8- 003BN	P167842 P169904
926698Q	HF7072	H9077	51689	HC9600FDP13H HC9600FDP13Z HC9600FKP13H HC9600FKP13Z HC9600FUP13H HC9600FUP13Z	SBF-9600-13Z3B	1.11.13D03BN H9600/13- 003BN	P169432

ParFit™ Hydraulic Filters

Racor ParFit	Fleetguard	Baldwin	Wix	Pall	Schroeder	Hydac (Hycon)	Donaldson
926699Q	HF7076 HF7476	H9083	51709	HC9600FDP16H HC9600FDP16Z HC9600FKP16H HC9600FKP16Z HC9600FUP16H HC9600FUP16Z	SBF-9600-16S1B SBF-9600-16S3B SBF-9600-16S3V	1.11.16D03BN H9600/16-003BN	P168433
926835Q	HF7066	H9071	51685	HC9600FDS4H HC9600FDS4Z HC9600FKS4H HC9600FKS4Z HC9600FUS4H HC9600FUS4Z	SBF-9600-4S7B	1.11.04D12BN H9600/4-010BN	P164164 P164364
926839Q	HF7074	H9079	51690	HC9600FDS13H HC9600FDS13Z HC9600FKS13H HC9600FKS13Z HC9600FUS13H HC9600FUS13Z	SBF-9600-13S7B SBF-9600-13S7V	1.11.13D12BN H9600/13-010BN	
926841Q	HF7065 HF7465	H9070	51685	HC9600FDN4H HC9600FDN4Z HC9600FKN4H HC9600FKN4Z HC9600FUN4H HC9600FUN4Z	SBF-9600-4S3B	1.11.04D06BN H9600/4-005BN	P164592 P164600
926843Q	HF7069	H9074	57848	HC9600FDN8H HC9600FDN8Z HC9600FKN8H HC9600FKN8Z HC9600FUN8H HC9600FUN8Z	8TS3 8TZ5 SBF-9600-8S3B	1.11.08D06BN H9600/8-005BN	P164594 P164601
926888Q	HF7078 HF7478	H9085	51684	HC9600FDS16H HC9600FDS16Z HC9600FKS16H HC9600FKS16Z HC9600FUS16H HC9600FUS16Z	SBF-9600-16S7B SBF-9600-16S7V	1.11.16D12BN H9600/16-010BN	P164168 P164170
927176Q	HF7082 HF7482		57847	HC9601FDP8H HC9601FDP8Z HC9601FKP8H HC9601FKP8Z HC9601FUP8H HC9601FUP8Z	SBF-9601-8S1B 8TSX3	1.11.08D03BH H9601/8-003BH	P167185

Questions? Contact Technical Support:
800 344 3286 or 209 521 7860 ext. 7555
e-mail: racortech@parker.com

ParFit™ Hydraulic Filters

Racor ParFit	Fleetguard	Baldwin	Wix	Pall	Schroeder	Hydac (Hycon)	Donaldson
932685Q					KKZX10	2056633	
932872Q	HF7008		51295	HC8300FDP39H HC8300FDP39Z HC8300FKP39H HC8300FKP39Z HC8300FUP39H HC8300FUP39Z HC8310FKP39H HC8310FKP39Z	SBF-8300-39S1B SBF-8300-39S3B SBF-8300-39S3V	1.06.39D03BN H8300/39-003BN	P171048 P167836 P172960
932873Q	HF7009			HC8300FDN39H HC8300FDN39Z HC8300FKN39H HC8300FKN39Z HC8300FUN39H HC8300FUN39Z HC8310FKN39H HC8310FKN39Z	SBF-830039S3B	1.06.39D06BN H8300/39-005BN	P164578 P164582 P171047 P171050
932874Q	HF7010			HC8300FDS39H HC8300FDS39Z HC8300FKS39H HC8300FKS39Z HC8300FUS39H HC8300FUS39Z HC8310FKS39H HC8310FKS39Z	SBF-8300-39S7B SBF-8300-39S7V	1.06.39D12BN H8300/39-010BN	P164565 P164566 P171045 P171051
933044Q	HF7004 HF7404			HC8300FDP16H HC8300FDP16Z HC8300FKP16H HC8300FKP16Z HC8300FUP16H HC8300FUP16Z HC8310FKP16H HC8310FKP16Z	SBF-8300-16S3B SBF-8300-16S3V	1.06.16D03BN H8300/16-003BN	P167507 P167835
933196Q	HF30738			HC8900FDT8H HC8900FDT8Z HC8900FKT8H HC8900FKT8Z HC8900FUT8H HC8900FUT8Z	SBF-8900-8S15B	1.08.08D25BN H8900/8-020BN	P167889

M

ParFit™ Hydraulic Filters

Racor ParFit	Fleetguard	Baldwin	Wix	Pall	Schroeder	Hydac (Hycon)	Donaldson
933205Q	HF30771			HC8900FDT13H HC8900FDT13Z HC8900FKT13H HC8900FKT13Z HC8900FUT13H HC8900FUT13Z	SBF-8900-13S15B	1.08.13D25BN H8900/13-020BN	P167890
933213Q	HF30793			HC8900FDT16H HC8900FDT16Z HC8900FKT16H HC8900FKT16Z HC8900FUT16H HC8900FUT16Z	SBF-8900-16S15B	1.08.16D25BN H8900/16-020BN	P167891
933239Q	HF30027	H9042	57121	HC9020FDN4H HC9020FDN4Z HC9020FKN4H HC9020FKN4Z HC9020FUN4H HC9020FUN4Z	SBF-9020-4S3B	1.07.04D06BN H9020/4-005BN	P165041
933246Q	HF7045	H9046	57902	HC9020FDN8H HC9020FDN8Z HC9020FKN8H HC9020FKN8Z HC9020FUN8H HC9020FUN8Z	SBF-9020-8S3B	1.07.08D06BN H9020/8-005BN	P165043
934122Q	HF30889			HC8314FKN39H	39QCLZ5V	2083926	P564547
PR3033Q	ST1217				SBF-0030D-Z10B	0030D010BNHC	
PR3088Q			57873	HC2206FDT6H HC2206FKT6H HC2206FUT6H	SBF0110D020 SBF-0110D-Z25B	0110D020BN-HC 0110D020BN 0110D020BN/HC 0110D020BNHC 0110D020P	
R750-H-0806A	HF6778	BT8308-MPG	51849	HC7500SKN8H	SBF-7500-8Z5B		P165762

Questions? Contact Technical Support:
800 344 3286 or 209 521 7860 ext. 7555
e-mail: racortech@parker.com

ParFit™ Hydraulic Filters

Racor ParFit	Fleetguard	Baldwin	Wix	Pall	Schroeder	Hydac (Hycon)	Donaldson
927182Q	HF7084			HC9601FDP13H HC9601FDP13Z HC9601FKP13H HC9601FKP13Z HC9601FUP13H HC9601FUP13Z	SBF-9601-13S1B	1.11.13D03BH H9601/13-003BH	P167411
927723Q	HF7450	H9051	57858	HC9021FDP8H HC9021FDP8Z HC9021FKP8H HC9021FKP8Z HC9021FUP8H HC9021FUP8Z	SBF-9021-8S1B	1.07.08D03BH H9021/8-003BH	P167182
927725Q	HF7448	H9049	57853	HC9021FDP4H HC9021FDP4Z HC9021FKP4H HC9021FKP4Z HC9021FUP4H HC9021FUP4Z	SBF-9021-4S1B	1.07.04D03BH H9021/4-003BH	P167180
927861Q	HF7001	H9001		HC8300FDN8H HC8300FDN8Z HC8300FKN8H HC8300FKN8Z HC8300FUN8H HC8300FUN8Z	SBF-8300-8S3B	1.06.08D06BN H8300/8-005BN	P164574 P164580
929099Q	HF7003			HC8300FDT8H HC8300FDT8Z HC8300FKT8H HC8300FKT8Z HC8300FUT8H HC8300FUT8Z	SBF-8300-8S15B	1.06.08D25BN H8300/8-020BN	P164217 P164430
930099Q	HF7067 HF7467	H9072	51694	HC9600FDT4H HC9600FDT4Z HC9600FKT4H HC9600FKT4Z HC9600FUT4H HC9600FUT4Z	SBF-9600-4S15B	1.11.04D25BN H9600/4-020BN	P164172 P164368
930118Q	HF7071 HF7471	H9076	51688	HC9600FKT8H HC9600FDT8H HC9600FDT8Z HC9600FKT8Z HC9600FUT8H HC9600FUT8Z	SBF-9600-8S15B	1.11.08D25BN H9600/8-020BN	P164174 P164369

ParFit™ Hydraulic Filters

Racor ParFit	Fleetguard	Baldwin	Wix	Pall	Schroeder	Hydac (Hycon)	Donaldson
930194Q	HF7107 HF7507	H9114		HC9800FDT8H HC9800FDT8Z HC9800FKT8H HC9800FKT8Z HC9800FUT8H HC9800FUT8Z	SBF-9800- 8Z25B	1.13.08D25BN H9600/8-020BN	P169450
930369Q	HF30707	H9044	57120	HC9020FKT4H HC9020FKT4Z HC9020FDT4H HC9020FDT4Z HC9020FUT4H HC9020FUT4Z	SBF-9020- 4S15B	1.07.04D25BN H9020/4-020BN	P165136
930370Q	HF30728	H9048	57861	HC9020FKT8H HC9020FKT8Z HC9020FDT8H HC9020FDT8Z HC9020FUT8H HC9020FUT8Z	SBF-9020- 8S15B	1.07.08D25BN H9020/8-020BN	P165138
931018Q	HF30754			HCS630KDT9H	KZ20		
932612Q	HF7793	H9043	57120	HC9020FKS4H	SBF-9020- 4Z10B	2060904	P165006
932618Q	HF7046	H9052	57902				P165015
932668Q	HF30491		57840	HCS630KDP9H	KZ3	2060528	
932669Q	HF30089	PT8364	57756	HCS630KDN9H	KZ5	2060529	P174623
932670Q	HF30268	PT8363	57756 57841	HCS630KDS9H	KZ10	2060530	P163903
932676Q	HF30267		57598		KSX7 KZX10		P560398
932677Q	HF30595			HC9700FDP18H HC9700FDP18Z HC9700FKP18H HC9700FKP18Z HC9700FUP18H HC9700FUP18Z	KKZ3	2060430	P174245
932679Q	HF30318		57889	HC9700FDS18H HC9700FDS18Z HC9700FKS18H HC9700FKS18Z HC9700FUS18H HC9700FUS18Z	KKZ10	2060432 5.03.18D10BN H2K-010BN	P174249

Questions? Contact Technical Support:
800 344 3286 or 209 521 7860 ext. 7555
e-mail: racortech@parker.com

Part Number Index

9

PRODUCT	PAGE#
932611Q	M2
932617Q	M2
932670Q	M4
932679Q	M4
933488Q	M4

H

PRODUCT	PAGE#
HF2	M2
HF3	M3
HF4	M4

Section: N
Contamination Detection Systems

aerospace
climate control
electromechanical
filtration
fluid & gas handling
hydraulics
pneumatics
process control
sealing & shielding

Parker Racor

ENGINEERING YOUR SUCCESS.

Table of Contents

icoµnt Particle Monitoring Systems N1
icoµnt PD N7
icoµnt BS N9
Part Number Index N11

icoμnt Particle Monitoring Systems

ACM20

There are many reasons why the ACM20, portable particle counter, is a world-beater. Users are attracted to its ease of use in the field, and in the laboratory. Others recognise the manufacturing quality, reliability and the potential for improved monitoring of fuel supply systems that until now have required laboratory analysis to confirm contamination levels. Then there are those who find originality and innovation irresistible qualities that when combined provide a fluid condition monitor that will out-perform the rest.

Accredited to US Standards and achieving full ISO certification and calibration to the latest ISO Medium Test Dust Standards, the ACM20 offers users advanced laser technology and a fast, dynamic on-line two minute test cycle.

In addition to the standard unit there is also an ATEX, hazardous environment version so as to avoid unnecessary risk in locations where flammable vapors may be present.

- **Fuel Testing Laboratories – DefStan 9191 – In order to better understand dispersed contamination in jet fuel, particle counting is now included alongside existing laboratory techniques**
- **Bottle Sampling - Energy Institute (EI) - IP 564 – Laboratory determination of the level of dispersed contamination in aviation kerosine using an Automatic Particle Counter (APC)**
- **Replace Clear & Bright and Gravimetric – With the introduction of the ACM20, all subjectivity surrounding Clear & Bright and Gravimetric methods can be removed**
- **Also for use on petroleum based hydraulic applications (Skydrol compatible available) – Suitable for use with mineral oil and petroleum based fluid as per standard hydraulic particle counter, reporting fluid cleanliness to ISO 4406:1999**

Parker Filtration continues, through technical expertise and proven products, to retain a world class position as an innovator in designing and manufacturing fluid contamination monitoring and analysis equipment. We ensure our customers can maintain the cleanliness of their fuel, storage, and hydraulic systems.

Recently Parker Filtration's development engineers have successfully designed and manufactured a 'family' of icoμnt contamination analyzers, particle detectors, and bottle samplers.

The Parker ACM20 Portable Particle Counter has been developed from existing technology for monitoring contamination in AvTur and other Hydrocarbon fuels, in accordance with the Energy Institute (EI) Method IP 564.

In addition, the ACM20 can also be used to monitor various fuels from existing sampling points in locations from refineries, pipelines, distribution terminals, airport fuel supply systems all the way through to the point of uplift into aircraft*.

** Hot works permit required for online sampling (ATEX Zone II unit available).*

N

The Parker ACM20 portable particle counter, for use in measuring the levels of contamination in fuels, as per the Energy Institute Test Method IP564, has now been included in the DEFSTAN 9191 Jet Fuel Specification as a report only test, alongside the current gravimetric test method (IP423 or ASTM D5452), and clear & bright visual test method (IP216 or ASTM D2276).

Questions? Contact Technical Support:
800 344 3286 or 209 521 7860 ext. 7555
e-mail: racortech@parker.com

Parker Racor

icount Particle Monitoring Systems

Repeatable, reproducible, and in real time. The ACM20 offers the following user benefits:

- **Primary output. Six cumulative particle size channels ranging from >4µm(c) to >30µm(c) and numbers per ml in accordance with ISO4406-1999.**
- **Secondary diagnostic output. reporting % volume distribution, indicating presence of free water due to Bi-modal curve.**
- **Recognized as a suitable/possible replacement for subjective test methods such as clear & bright and gravimetric Millipore™.**
- **Quick and easy 2 minute test, with very little waste (typically 125ml per test).**
- **Totally portable, easy to use in the field or the laboratory.**
- **Connected to the process line via existing Millipore™ fittings already in use for other industry equipment.**
- **Used in other applications such as filter performance, pipeline commissioning and extending service intervals of supply systems.**
- **300 downloadable test memory allowing for trend analysis and upkeep of statistical records to predict and save routine maintenance, resulting in less downtime.**
- **Data retrieval of test results from memory via hand set display.**
- **User friendly instrument improves familiarity and awareness of fuel systems.**
- **Traceable to ISO11171 for SRM2806 through ISO11943 principles.**

Part Number	Description
ACM202022US	Particle Counter
ACM202024US	Particle Counter With Lab Kit (DEFSTAN 9191)
Replacement Components	
B84816	Parsmart Downloader Software
B84746	1 LTR Waste Bottle
B84745	Throttle Kit
B84645	Millipore Adaptore Assembly
B84609	Re-chargeable Battery Pack
B84830	Power Supply
P843702	Replacement Printer Ribbon
B84702	5X Replacement Paper Roll
P849111ACM	Instruction Manual
B84832	Oil Delivery Unit (Lab Unit)
P843850	Transportation Case

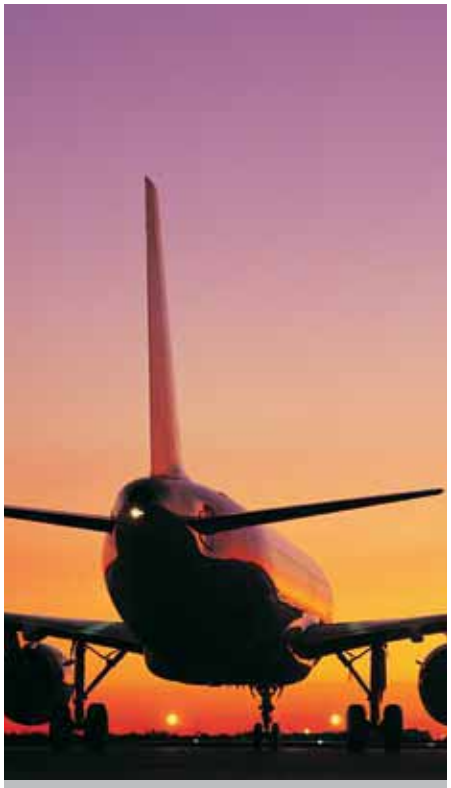

Case Studies

In a recent study carried out at a major international airport, an ACM20 was used to monitor refueling activities. The results proved there were levels of solid contamination throughout the hydrant system that were previously undetected by current methods. As a result the hydrant was flushed and readings were reduced to acceptable levels.

In another airport, elements were removed from a filter water separator vessel, which were found to have ruptured due to a reverse flow in the system. Only the ACM20 detected the element failure and then proved that the newly installed elements were working correctly.

Questions? Contact Technical Support:
800 344 3286 or 209 521 7860 ext. 7555
e-mail: racortech@parker.com

ACM20 With Lab Kit

Testing Set-up:

The testing unit should be set up in accordance with manufacturers' operating instructions

Test Portion:

Pour a minimum of 15oz. of the field sample into a clean test portion container

Test Preparation:

Prior to starting a test, tumble the test portion end over end for 60 seconds to ensure any settled particles are redistributed

Flush System:

Flush the equipment with the new test sample for 60 seconds prior to starting the test

Start Testing:

Following the flush, start a test by turning the blue valve in the direction indicated

Laboratory Kit:

The ACM20 with additional laboratory kit is proposed as an alternative method for use within DefStan 9191 – the standard for aviation turbine fuel*.

The Oil Delivery Unit (ODU) laboratory kit is a peristaltic pump unit that allows fuel to be pumped through the ACM20 for testing purposes offline.

*Note: Energy Institue EI Method (IP PM DK/07) specifically details the test method used for the ACM202024 (lab unit). It has been included in DEF STAN 91-91 Issue 6 - "Annex F - Information on Particulate Contamination" as an alternative to the current subjective test methods such as Clear and Bright and Gravimetric Millipore.

N

Questions? Contact Technical Support:
800 344 3286 or 209 521 7860 ext. 7555
e-mail: racortech@parker.com

Parker Racor

icount Particle Monitoring Systems

ACM20 Application Flow Chart

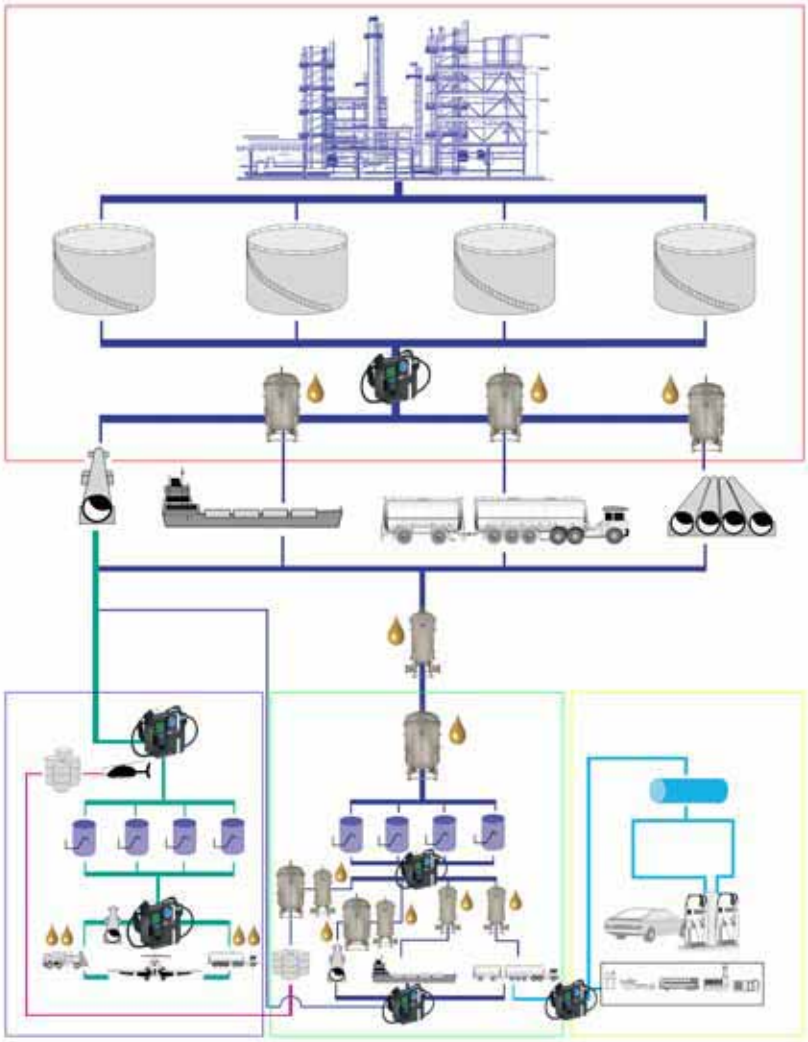

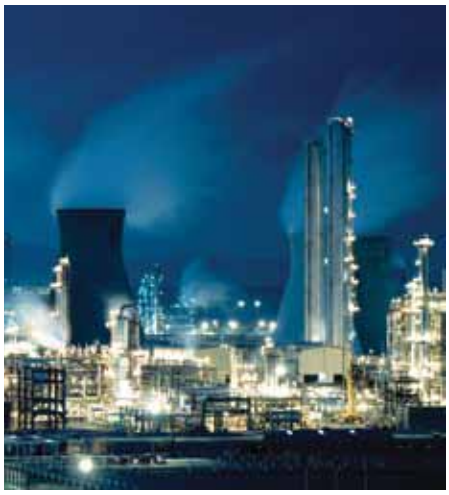

Questions? Contact Technical Support:
800 344 3286 or 209 521 7860 ext. 7555
e-mail: racortech@parker.com

icount Particle Monitoring Systems

ACM20-Z2

Adding to, and further enhancing the ACM product family, Parker's Condition Monitoring Centre has introduced an ATEX approved, ACM20Z2, Zone 2 accredited, particle counter. The ACM20Z2 is designed to be used to monitor various fuels from existing sampling points in hazardous locations from refineries, pipelines, distribution terminals, airport fuel supply systems all the way through to the point of uplift into aircraft. With Zone 2 classification, the ACM20Z2 is the worlds only ATEX approved portable particle counter.

- **Oil Refinery**
  To count and verify the levels of dispersed contamination in accordance with specification limits.
- **Distribution Terminals/Hubs**
  For use on receipt and outbound supply. Also to provide filtration performance, tank cleanliness and product quality checks.
- **Storage**
  Settling times can be reduced by monitoring with the ACM by ensuring that levels of dispersed contamination are below acceptable levels.
- **Airport Fuel Farm**
  Monitoring of the fuels into storage, through the fuel farm, hydrant system and uplift wing.
- **Pipeline Commissioning**
  Fast real time monitoring of pipelines following pigging and cleaning processes.
- **Oil and Gas Platforms**
  Used to monitor the filtration performance, system cleanliness and quality of delivered product.

N

Questions? Contact Technical Support:
800 344 3286 or 209 521 7860 ext. 7555
e-mail: racortech@parker.com

Parker Racor

icount Particle Monitoring Systems

ACM20 Z2, with Zone 2 Classification, is the worlds one and only ATEX approved portable particle counter.

- **Assembled in an approved and certified stainless steel enclosure to comply with ATEX Directive 94/9/EC and EN50 021 requirements.**
- **Can be used in explosive and hazardous areas, including Offshore and Mining.**
- **Certified to CE Ex II 3 G Eex nA/nL IIB T * (*as tested).**
- **"A" Class product defined for the Aviation market.**
- **ATEX approved Handset and keypad.**
- **Suitable for use with mineral oil and petroleum based fluid as per LCM20 particle counter.**
- **Primary Output. Six cumulative particle size channels ranging from >4µm(c) to >30µm(c) and numbers per ml in accordance with ISO4406-1999.**
- **Secondary Diagnostic Output. Reporting % volume distribution, indicating presence of free water due to Bi-modal curve.**
- **Totally portable with rechargeable battery.**
- **Designed for on-line operation, connecting to the process line via existing Millipore™ fittings, already in use for other industry equipment.**
- **Traceable to ISO11171 for SRM2806 through ISO11943 principles.**
- **IP68 Rated.**

Applications in Hazardous Zones:

In many industries, worker awareness needs to be maintained at a high level to ensure the safety of their operation. This is particularly relevant to offshore oil-drilling and gas-drilling crews, given the interactive and hazardous nature of their work. The Zone 2 ACM20 portable particle analyser is a tried and tested technology designed, proven and approved as a fluid contamination monitor that crews are using and trusting in such hazardous and demanding environments.

Part Number	Description
ACM202032US	Particle Counter
ACM202034US	Particle Counter With Lab Kit (DEFSTAN 9191)
Replacement Components	
B84816	Parsmart Downloader Software
B84746	1 LTR Waste Bottle
B84745	Throttle Kit
B84645	Millipore Adaptore Assembly
B84652	Battery Charger
B84650	2 Meter Process Cable Assembly
P843702	Replacement Printer Ribbon
B84702	5X Replacement Paper Roll
P849111ACM	Instruction Manual
B84832	Oil Delivery Unit
P843066	Transportation Case

Questions? Contact Technical Support:
800 344 3286 or 209 521 7860 ext. 7555
e-mail: racortech@parker.com

icoµnt Particle Monitoring Systems

icoµntPD

icoµntPD is a permanently installed fuel contamination detector.

Designed for use in pipelines, refuellers and hydrant dispensers. The IPD provides cost effective, full flow monitoring and can interface with system data acquisition devices enabling continuous, remote monitoring and system shut down during a contamination event.

Installed on the downstream side of the monitor/FWS vessel, the IPD receives slipstream sampling from an existing Millipore™ adaptor point. The real-time monitoring of the fuel passing through the sensor is reported per ISO4406:1999 outputs and fed back to the on-vehicle data acquisition unit. In the event of element failure, the alarm levels will be reached and the IPD will activate the "deadman" and stop fuelling.

- **Calibration to approved, online methods supported by the relevant International Standard procedures.**
- **Reporting in accordance with ISO4406-1999. Codes 7-22.**
- **Non invasive installation of equipment.**
- **Designed for on-line operation, connecting to the process line via existing Millipore™ fittings, already in use for other industry equipment.**
- **Eliminates subjective qualitative, measurement associated with laboratory procedures.Cost effective market solution ensuring filter performance integrity.**
- **Early warning LED indicators for level detection with output relay switching (mounted on control panel for operator visual).**
- **Innovative design using laser diode light obscuration technology.**
- **Simple communications protocol for user set-up, operation and output information.**
- **Full PC/PLC integration technology.**
- **4-20 mA / 0-5 Volts / RS232 / CANBUS outputs.**
- **Monitoring particle sizes >4, >6, >14 and >30µm(c).**
- **IP66 Rated.**

Applications:

- **Oil Refinery**
- **Distribution Terminals/Hubs**
- **Storage**
- **Airport Fuel Farm**
- **Dispensers/Refuellers**

The icoµntPD represents the most up to date technology in solid state particle detection.

The design dynamics, attention to detail and moulding compactness of the permanently mounted, on-line particle detector module, combined with on-board, laser based, leading-edge technology, brings to all industries a truly revolutionary, particle detector as a remarkable cost effective market solution to fluid management and contamination control.

N

Questions? Contact Technical Support:
800 344 3286 or 209 521 7860 ext. 7555
e-mail: racortech@parker.com

Parker Racor

icoμnt Particle Monitoring Systems

Oil Cleanliness Indicator

(icoμntPD OCI):

- **New and under development in the detection of contaminates distribution in various Aviation fuels.**
- **Portable monitoring tool providing fluid qualification to ISO 4406:1999 standards.**
- **Supplements the icount ACM20 product portfolio.**
- **Quick, simple to use monitoring tool for sampling**
- **fluids from containers, fuel bunkers and holding tanks.**
- **Field solution to Laboratory methods for the detection of solid contamination and free water inference.**

Part Number	Description
CALL FACTORY	Online Particle Counter (LED, W/O Limit Relay, W/O Moisture Sensor)
CALL FACTORY	Online Particle Counter (LED, W/O Limit Relay, W/ Moisture Sensor)
CALL FACTORY	Online Particle Counter (LED, W/ Limit Relay, W/O Moisture Sensor)
CALL FACTORY	Online Particle Counter (LED, W/ Limit Relay, W/ Moisture Sensor)
CALL FACTORY	Online Particle Counter (Digital, W/O Limit Relay, W/O Moisture Sensor)
CALL FACTORY	Online Particle Counter (Digital, W/O Limit Relay, W/ Moisture Sensor)
CALL FACTORY	Online Particle Counter (Digital, W/ Limit Relay, W/O Moisture Sensor)
CALL FACTORY	Online Particle Counter (Digital, W/ Limit Relay, W/ Moisture Sensor)
CALL FACTORY	Auxilary Flow Device
CALL FACTORY	Oil Cleanliness Indicator

Auxilary Flow Device:

The pressure compensated, flow control device has been developed to give the IcountPD user greater flexibility. The flow control device will enble testing where flow ranges are outside the icoμntPD specifications (40-140 ml/min), or where pipe diameters do not allow the ICountPD to be installed.

The flow control device fits onto the downstream (outlet) side of the icoμntPD, connecting through a manifold block, via a self-sealing quick connection test point and is fitted with a differencial pressure valve.

This flow control device automaticaly compensates for pressure and viscocity changes, while maintaining its settings even as the work load changes.

Simply position the valve to match the viscocity of the oil you are testing.

Questions? Contact Technical Support:
800 344 3286 or 209 521 7860 ext. 7555
e-mail: racortech@parker.com

icoµnt Particle Monitoring Systems

icoµntBS

The complete solution - industrial design combined with state of the art technology

The icoµntBS - Bottle Sampler from Parker with its innovative industrial design has been developed for customers looking for state of the art technology, attention to detail and the compactness of a permanent laboratory particle analysis model.

Combine this with on-board, laser based, leading edge technology to bring to all industries a truly revolutionary Particle Counter. The icoµntBS is a product from the next generation of Parker's fluid particle analysis and monitoring innovations.

The IBS features an easy to use interactive touch screen, environmentally controlled pressurized bottle chamber for air bubble suppression via an internal compressor pump, with automated door locking mechanism, sample tube cleaning sleeve minimizing contamination cross over, and an internal printer.

The icoµntBS benefits from Parkers knowledge and experience of providing bottle analysis equipment to the market over the last 15 years.

This experience comes from selling market leading innovative solutions and by having front line condition monitoring products for all sectors of fluid analysis opportunities. The unit was at every stage developed with the customers voice in mind.

Part Number	Description
CALL FACTORY	Bottle Sampler (USA)
CALL FACTORY	250ml Sample Bottle
CALL FACTORY	Sample Bottle Pack (50)
CALL FACTORY	Vapour/Waste Bottle
CALL FACTORY	Printer Paper Reel (x1)
CALL FACTORY	USA Power Supply
CALL FACTORY	1m Waste Tube (Clear)
CALL FACTORY	1m Vapour Hose (Blue)
CALL FACTORY	USB Memory Stick
CALL FACTORY	icountBS CD Manual
CALL FACTORY	Verification Fluid
CALL FACTORY	MINI-LAB KIT

icoµntBS - Bottle Sampler Features & Benefits:

- **Quick sample bottle analysis with variable test time options from 15 seconds and volume capacities from 10ml.**
- **Repeatable and re-producible result performance to ISO4406:1999 and NAS1638 particle count distributions. Contact your Racor distributor for other calibration standards.**
- **On-board compressor and 'shop' air capability.**
- **Design concept allowing for portability. DC and rechargeable battery pack power options built in.**
- **Cost-effective and economical alternative solution to external laboratory services.**
- **6 fixed channel size analysis.**
- **Fluid resistant touch type screen panel.**
- **Sample tube self cleaning sleeve minimizing contamination cross over.**
- **Internal thermal printer.**

N

Questions? Contact Technical Support:
800 344 3286 or 209 521 7860 ext. 7555
e-mail: racortech@parker.com

Parker Racor

icount Particle Monitoring Systems

Average Particle Counts

This table gives estimated counts found in a typical aviation fuel distribution system, and is given as guidance, in which APR/EI filtration equipment is installed.

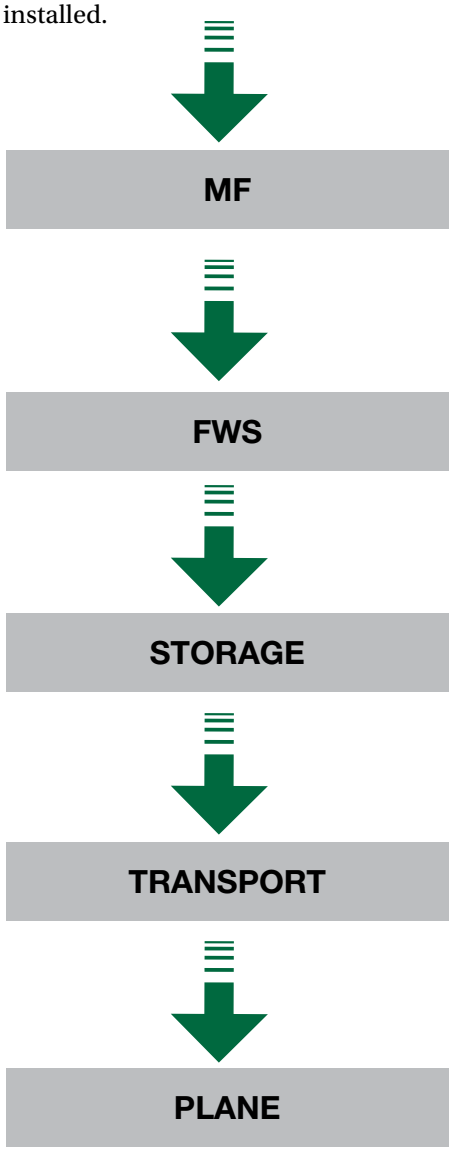

Into Micro Filter		ISO Code - 4406 1999
	High Count	High Count Code
>4 µ(c)	2,500	18
>6 µ(c)	350	15
>14 µ(c)	10	10

Into FWS		ISO Code - 4406 1999
	High Count	High Count Code
>4 µ(c)	500	16
>6 µ(c)	50	13
>14 µ(c)	5	9

Into Storage		ISO Code - 4406 1999
	High Count	High Count Code
>4 µ(c)	100	14
>6 µ(c)	10	10
>14 µ(c)	1	7

Out of Storage		ISO Code - 4406 1999
	High Count	High Count Code
>4 µ(c)	500	16
>6 µ(c)	50	13
>14 µ(c)	5	9

Into Transport		ISO Code - 4406 1999
	High Count	High Count Code
>4 µ(c)	100	14
>6 µ(c)	10	10
>14 µ(c)	1	7

Into Plane		ISO Code - 4406 1999
	High Count	High Count Code
>4 µ(c)	100	14
>6 µ(c)	10	10
>14 µ(c)	1	7

Questions? Contact Technical Support:
800 344 3286 or 209 521 7860 ext. 7555
e-mail: racortech@parker.com

Part Number Index

A

PRODUCT	PAGE#
ACM20	N1
ACM202022US	N2
ACM202024US	N2
ACM202032US	N6
ACM202034US	N6
ACM20-Z2	N5

B

PRODUCT	PAGE#
B84609	N2
B84645	N2, N6
B84650	N6
B84652	N6
B84702	N2, N6
B84745	N2, N6
B84746	N2, N6
B84816	N2, N6
B84830	N2
B84832	N2, N6

I

PRODUCT	PAGE#
icountPD	N7
icountBS	N9

P

PRODUCT	PAGE#
P843066	N6
P843702	N2, N6
P843850	N2
P849111ACM	N2, N6

Questions? Contact Technical Support:
800 344 3286 or 209 521 7860 ext. 7555
e-mail: racortech@parker.com

Part Number Index

0

PRODUCT	PAGE#
004690002	F103
004690003	F103
004690005	F103
004690006	F103
004690007	F103
004690008	F103
004690009	F103
004690010	F103
004690011	F103
004690012	F103
004690013	F103
004690014	F103
004690015	F103
004690017	F103
004690018	F103
004690019	F103
0104-4-6	H26, H28
0104-4-8	H29
0104-6-6	H29
012233001	F80
012233002	F80
012233003	F80
012233004	F80
012233005	F80
012233006	F80
012233007	F80
012233008	F80
012233009	F80
012233010	F80
012233011	F80
012233012	F80
012233014	F80
012233017	F80
012233018	F80
012233019	F80
014439000	F105
014440001	F105
01-4-6-6	H26, H28
015094009	F108
015094010	F108
015094011	F108
015094012	F108
015094017	F108
015094018	F108
015094021	F108
015094022	F109
015094023	F109
015094024	F109
015094026	F109
015094027	F109
015094031	F109
015094032	F109
015094036	F111
015094037	F109
015094039	F108
015094040	F108
015094043	F111
015094045	F110
015094046	F108
015094047	F112
015094048	F112
015094049	F112
015094050	F112
015094051	F112
015094052	F112
015094053	F112
015094054	F112
015094060	F110
015094061	F110
015094062	F110
015094064	F111
015094065	F110
015094070	F112

0 continued

PRODUCT	PAGE#
015094072	F111
015094073	F110
015094075	F112
015094076	F112
015094077	F112
015094078	F112
015094079	F112
015094080	F111
015094081	F111
015094082	F111
015094086	F110
015094089	F111
015094092	F110
015094094	F111
015094095	F112
015094096	F111
015094097	F112
015094102	F111
015094103	F111
015094104	F111
015094105	F110
015094106	F110
015094111	F110
015094113	F110
015094114	F110
015094115	F110
015094116	F108
015094117	F108
015382500	F84
015382508	F84
015382600	F84
016411000	F89
01SP-2S	B32
01SP-6F	B41
01SP-6S	A124, A125
024811001	F82
024811002	F82
024811003	F82
025-MBL-02B	A2, A9
025-RAC	B3
025-RAC-01	A2, A7, A15, B4
025-RAC-02	A8, A15, B4
025-RAC-05	A10, A15, B4
025-RAC-09	A11, A15, B4
025-RAC-10A	A2, A16, B5
025-RAC-11	A2, A16, B5
025-RAC-12	A2, A16, B5
025-RAC-13	A2, A16, B5
035588000	F93
035589001	F83
035589008	F83
035589010	F83
035589011	F83
035589012	F83
035589013	F83
038105007	F93
039135001	F105, F85
041199002	F85
041199003	F85
041199004	F85
041199005	F85
041199006	F85
041199007	F85
042067000	F82
042160000	F82
042586000	F82
043910203	F93
044430001	F78
045800000	F89
045-RAC-351	A21, A22
048976000	F89
049261000	F89
049470001	F90
049470002	F90
049470003	F90
049470004	F90
049471001	F90
049471002	F90
049471003	F90
049471004	F90
049780000	F93

049812000	F89
049890001	F93
049890003	F93
049891000	F93
050073000	F93
050727000	F93
051793001	F90
051799000	F93
051800000	F89
051884001	F93
051884002	F93
051884003	F93
052711000	F89
056519002	F83
056519003	F83
056519004	F83
056519005	F83
056519010	F83
056519011	F83
056519016	F83
058447000	F86, F87
059590001	F93
059599002	F93
059599003	F93
059709000	F78
059711000	F78
059713000	F78
059714000	F76
059716000	F76
059718000	F76
060039000	F86, F87
060040000	F88
060095001	F91
060095002	F91
060096001	F92
060096002	F92
060144000	F88
060146000	F88
060147000	F88
060236000	F89
060237000	F89
060238000	F89

060392001	F83
060393001	F83
060394001	F83
060394002	F83
060395001	F83
060395002	F83
060396001	F83
060396002	F83
060450022	F82
060450023	F82
060450026	F82
060450027	F82
060450028	F82
060450029	F82
060450030	F82
060799000	F89
060876000	F91
061194000	F81
061195000	F81
061334001	F91
061334002	F91
061335001	F92
061335002	F92
061336001	F92
061336002	F92
062701003	F78
062701004	F78
062701010	F78
062701012	F79
062701013	F79
062701014	F79
062701015	F79
062701016	F79
062702001	F79
062702002	F79
062702003	F79
062703010	F79
062705001	F75
062705002	F75
062705008	F75
062705010	F76
062705011	F76

0 continued

PRODUCT	PAGE#
062705012	F76
062705013	F76
062713003	F77
062713007	F77
062713009	F77
062713011	F77
062713013	F77
062891001	F56
062981002	F56
062981003	F56
062981004	F56
062981007	F56
062981010	F56
066386002	F86, F87
066386003	F87
066386005	F88
066386006	F88
066386008	F88
066386009	F88
066401002	F86, F87
066401003	F87
066401005	F88
066401006	F88
066417002	F87
066417003	F87
066417005	F88
066417006	F88
066417008	F88
066417009	F88
066430002	F87
066430003	F87
066430005	F88
066430006	F88
066430008	F88
066430009	F88
067872000	F77
067874000	F77
067876000	F77
070025004	F85
071338001	F48
071338002	F48
071338004	F48
071338005	F48
071338007	F48
071338008	F48
071338009	F48
071338010	F48
071338013	F48, F51
071656001	F49
071656002	F49
071921001	F104
071921002	F104
071921003	F104
071921004	F104
071921006	F104
072994000	F49, F105
072995002	F50
076248001	F105
078950000	F59
084404000	F73
094973001	F57
094973002	F57
094973003	F57
094973004	F57
094973005	F57
094973006	F57
094973007	F57
099049001	F104
099049002	F104
099049003	F104
099842002	F65
099842004	F65
099842005	F66
099842006	F66
099842007	F66
099842008	F66
099842009	F66
099842010	F66
099930001	F90
099930002	F90
099930003	F90

1

PRODUCT	PAGE#
10110	B24
10192	A35
10210	B32
10219	A31
10223	B20
10224	B20
11007	A150, A254, A254, A256, A256, B64, B66
11041	B64
11065	A265
11072	B68, B76
11076	A267
11078	H26, H28
11080	A310
11114	A310
11350	A252, A254, A256, B48
11548	A309
11801	A310
11892	B68
11893	B76
11895	A269, B76
11901	A310, H26, H28
11902	B76
11923	B68
12252	A310
12879	A312
14257	L2
14261	L2
14278	L2
14279	L2
14345	B24
14387	A19
14391	A297
15005	A252, B62
15335	B62
15349	B70
15374	A252, B62
16029	A132
16083	A132
18998	A267
19460	A269, B78
19461	A269, B78
19519	B72, B74
19523	B78
19526	B64, B66
19531	B68, B76
110007	B64
1000152	H24
1000FH	A249, A262, A265, A267, A269
1000FH10	A317
1000MA	B56, B59, B68, B74, B76, B78
1000MAM	B59
1003MA	B59
10SP-2S	B20
11078	H32
110A	A25, A36
11-1048	A302
11-1220	A310
11-1626	A269, B78
11-1629-01	B68
11-1632	A269, B78
11-1632-01	B76
111657004	F102
111657006	F102
111657008	F102
111657009	F102
111657010	F102
111657011	F102
111657012	F102
111657013	F102
111657014	F102
111657015	F102
111657016	F102
11-1761	A269, B78
111810001	F106
111810002	F106
111810003	F106
11-1835-01	B66
11-1962	A310
114088001	F106
114088002	F106

1 continued

PRODUCT	PAGE#
114088003	F106
114500001	F64
114500002	F64
114500003	F64
114880003	F64
114880005	F64
117122000	F64
11841	H29
11895-02	B68, B76, B78
11901	H32
120A	A28, A36
120B	A29, A36
120-RMAM	B29, B30
120R-RAC-01	B16, B17
120R-RAC-02	B16, B17
123583440	F71, F72
123583550	F71, F72
123583660	F71, F72
123583665	F71, F72
123583770	F71, F72
123583990	F71, F72
123970001	F68
123970002	F68
123970003	F68
123970004	F68
123970005	F68
123970006	F68
123970007	F68
123970008	F68
123970009	F68
123970010	F68
123970011	F68
123970012	F68
123970013	F69
123970014	F69
123970015	F69
123970016	F69
123970017	F69
123970018	F69
123970019	F69
123970020	F69
123970021	F69
123970022	F69
123970023	F69
123970024	F69
125154005	F73
125254013	F73
125291001	F113
125291002	F113
125291003	F113
125291004	F113
140R	A33, A36
145F-6-6	H26, H28
15418-08	B62
15418-09	B62
15418-10	B62
1606B	A305, B103
1I RK21057	A208

2

PRODUCT	PAGE#
20022	B20
20301	A206, A208, A210
20505	A132, A191, B24
20707	A233, B22, B26
21381	A171, A187, A191
21410	A27
21430	B28
21501	A77
22021	A309
22029	A89
22099	A201, B12
22209	A88
22231	A124, A125, A19
22237	B22
22249	A124, A125
22310	A177, A179
22311	A181, A193
22312	A65
22313	B12, B14
22351	A68

22360	A43, A51, B36
23005	H26, H28
23013	A150
23082	A289
23084	A289
24000	B24
23179001	A212
2010PM-OR	A252, B62
2010SM-OR	A252, B62
2010TM-OR	A252, B62
20151B	A220
2020PM-OR	A256, B66
2020SM-OR	A256, B66
2020TM-OR	A256, B66, A317
2040PM-OR	A254, B64
2040SM-OR	A254, B64
2040TM-OR	A254, B64
2104-4-6	H26, H28
215R	A38, A41, A47
215RMAM	B33, B34
22675-B	B48
23005	H32
23006	H32
23021	H32
23024	H29
23059	H29
23060	H29
23061	H29
23063	H29
230R	A39, A41, A48
230RMAM	B33, B34
245R	A40, A41, A49
245RMAM	B33, B34
2MP30R	H25
2MP51UX	H32
2MP988LX	H32
2MP988RX	H32

3

PRODUCT	PAGE#
30076	A191, B24
300200	A152
30237	A77
30562	A169, A173, A175, A185
30563	A169, A171, A173, A175, A185, A187, A191
30604	A181, A193
30628	A164
30762	A65
30768	B12, B14, B28
30837	A164
30941	B28
30942	A68
30945	A164
30965	A193
31025	A218, A220
31749	A220
32280	A310
32282	A24
32311	A310
32312	A310
32314	A310
30288-01	B28
30308-01	B28
3120R-RAC-32	B16, B18
3150R	A56, A59, A68
31547-16	A181
320HTR4	L4
320HTR4T	L4
320R-RAC-01	B16, B17
320R-RAC-02	B16, B17
3250R	A57, A59, A68
325R	A54 A59, A65
330R	A55, A59, A65
345RC	A70, A79
360RC	A71, A79
390RC	A72, A79
3GV14X	H26, H28
3MP9400X	H32
3NL4469A	H26, H28, H29
3NL52RX	H26, H28, H32
3NL52SX	H26, H28, H32
3NL56UX	H32
3NL70LT	H26, H28, H29

4

PRODUCT	PAGE#
40685	A132
40819	K9
41728	K9
43572	K9
46311	H6
46313	H6
46314	H6
400033015	F105
400033020	F105
400033025	F105
400034000	F105
400135000	F59
400292000	F64
400431000	F59
400458001	F58
400458002	F58
400460001	F58
400460002	F58
400461001	F59
400461002	F59
400462001	F58
400462002	F58
400463001	F59
400463002	F59
400470002	F63
400820001	F60
400820002	F60
400820003	F60
400820004	F60
400820005	F61
400820006	F61
400820007	F61
400820008	F61
400820009	F61
400820010	F61
400820012	F61
400820014	F61
400820015	F62
400820019	F62
400820020	F62
400820021	F62
400820022	F62
400820023	F62
401079067	F114
401079068	F114
401079069	F114
401079071	F114
401079074	F114
401079083	F114
401079087	F114
401079090	F114
401079093	F114
401403001	F115
401403002	F115
401403003	F115
401403004	F115
401403005	F117
401403006	F117
401403007	F117
401403008	F117
401403013	F115
401403014	F115
401403015	F117
401403016	F117
401403019	F115
401403020	F117
401403025	F116
401403029	F116
401403030	F115
401403033	F116
401403034	F118
401403035	F116
401403038	F115
401403041	F116
401403043	F117
401403044	F116
401403055	F119
401403056	F116
401403057	F116
401403058	F115
401403059	F117

401403063	F115
401403066	F116
401403091	F116
401403092	F116
401403098	F116
401403201	F115
401403202	F117
401403203	F117
401403204	F118
401403205	F115
401403206	F116
401403207	F116
401403208	F116
401403209	F116
401403210	F118
401403211	F119
401403212	F117
401403213	F117
401403214	F118
401403215	F119
401403216	F118
401403217	F118
401403218	F119
401403219	F116
401403220	F119
40810	K9
40836	K9
4120MAM10	B38, B39
4120R	A83
41752	K9
43008	K9
43009	K9
43010	K9
43011	K9
43012	K9
43013	K9
43020	K9
43501	K9
43502	K9
43504	K9
43595	K9
43597	K9
43598	K9
43599	K9
43601	K9
43602	K9
43603	K9
43704	K9
43705	K9
445MAM10	B38, B39
445R	A80
460MAM10	B38, B39
460R	A81
49000	K9
490MAM10	B38, B39
490R	A82
490R-RAC-01	B16, B18

5

PRODUCT	PAGE#
50016	A310
50017	B88, B89
54039	A214
58066	A201
58132	A201, A280
58137	A201, A280
58179	A201, A280
58180	A201, A280
58181	A201, A280
500155002	F58
500157001	F59
500157002	F59
500158001	F59
500187012	F54
500192012	F54
500198020	F105
500198025	F105
500229000	F54
500233000	F54
500247012	F54
500250012	F53, F54
500FG	A248, A249, A258
500MA	B57, B61, B70
500MAM	B57

5 continued

PRODUCT	PAGE#
503MA	B57
525B/V	A105
58488-010	F67

6

PRODUCT	PAGE#
6400	A127
6401	A127
6707	A150
6120R	A121, A122
63PT-8-62	H26, H28
645R	A118, A122
660R	A119, A122
660R1210	A310
660R-RAC-01	B16, B18
660R-RAC-02	B16, B18
6706P	A150
6732P	A150
6732S	A150
6732T	A150
690R	A120, A122

7

PRODUCT	PAGE#
7563	E19
7581	E6
70906	E19
71166	E19
71981	E19
71982	E19
72059	E19
72061	E19
72368	B55
72482	E19
72531	E6
72532	E6
72694	E6
72695	B55
72699	E6
72710	B55, E6
72712	B55, E6
72783	E6
72806	E6
72896	B55
73152	B55
73160	B55
73161	B55
73166	E6
73231	E6
7125R	A283, A284
7125R10	A282
7125R1024	A282
7125R30	A137, A139, A282
7125R3024	A138, A139, A282
71330-.125	E19
71943-.25	B55
71943-.25	E6
71943-.5	E19
71943-.75	E19
72060-.5	E19
72060-.75	E19
731000FH	A263
731000MA	B59, B67
731000MAM	B59
7330	K9
745R	A283
745R30	A133, A139, A282
75/B32009	A160, A163
75/B32016	A161, A163
7500MAXM	B57
751000FHX	A248, A250
751000MAX	B60, B73
751000MAXM	B60
75500FGX	A248, A250
75500MAX	B56, B57, B69
75812MA	B42, B43
75900FHX	A250
75900MAX	B56, B58, B71
75900MAXM	B58
760R	A283

760R30	A134, A139, A282
771000FH	A248, A263
771000MA	B60, B75
777R	A145
777R1230	A148
777R1230FH	A146, A148
790R	A283, A284
790R30	A135, A139, A153, A282
790R3024	A136, A139, A282
791000FHV	A263
791000MAV	B56, B60, B77
79812MA	B42, B43

8

PRODUCT	PAGE#
812MA	B42, B43, B49
800D-5REC-D	A315, A317

9

PRODUCT	PAGE#
900FH	A248, A249, A260
900MA	B58, B63, B72
900MAM	B58
903MA	B58
911-N4-H6	B96
911-N6-H6	B96
911-N6-H8	A310, B96
913-N4-H6	B96
913-N6-H6	B96
913-O10-H10	A132
913-O10-H12	A132
915-W10-R10	B99
915W5-R5	B99
915-W6-R6	B99
915-W8-R8	B99
918-N4	B41, B66, B96
918-N6	B14, B22, B36, B96
918-N8	A19
91-N6	B26
932611Q	M2
932617Q	M2
932670Q	M4
932679Q	M4
933488Q	M4
93530-001	F67

A

PRODUCT	PAGE#
ABS10300	H34, H40
ABS10450	H34, H40
ABS10515	H39, H40
ABS11200	H35, H40
ABS11300	H36, H40
ABS11400	H37, H40
ABS11410	H38, H40
ABS20330	H34
ABS20370	H34
ABS20430	H34
ABS20470	H34
ABS25350	H34
ABS25450	H34
ABS44030	H34
ABS44045	H34
ABS44080	H37, H38, H39
ABS44090	H35, H36
ABS45155	H34
ABS45165	H34
ABS45336	H34
ABS45346	H34
ABS50030	H35, H36
ABS50057	H35, H36
ABS50065	H37
ABS50068	H35, H38, H39
ABS50070	H35, H36
ABS50072	H37, H38
ABS50082	H37, H38
ACM20	N1
ACM202022US	N2
ACM202024US	N2
ACM202032US	N6
ACM202034US	N6
ACM20-Z2	N5
ACV1350	A114
ACV4500	A108
ADT 1116	J2, J3

A continued

PRODUCT	PAGE#
ADT 1201	J2, J3
ADT 1555	J2, J3
ADT 2116	J2, J4
ADT 2201	J2, J4
ADT 2405	J2, J4
ADT 2555	J2, J4
ADT 3116	J2
ADT 4116	J2
ADT 4201	J2
ADT 4555	J2
ADT 5116	J2, J4
ADT 7116	J2
AF M408512	F26, G18
AF M501012	F26
AF M601212	F26
AF M8010	F96
AF M8021	F96
AF M8025	F96
AF M8026	F96
AF M8033	F96
AF M8034	F96
AF M8037	F96
AF M8047	F96
AFAP083	F9, F11
AFAP183	F9
AFAP184	F9
AFAP400	F9, F11
AFAP401	F9
AFAP414	F9, F11
AFAP415	F9
AFAP500	F9
AFAP501	F10
AFAP818	F10
AFAP819	F10
AFAP820	F10
AFAP919	F10
AFAP920	F10
AFC1000	F39
AFC1001	F39
AFC2000	F39
AFC2001	F39
AFCS021	F13, F15
AFCS031	F13, F15
AFCS051	F3, F13, F15
AFCS071	F3, F13, F15
AFCS081	F3, F13, F15
AFCS121	F3, F13, F15
AFCS181	F3, F13, F15
AFCS221	F3, F13, F15
AFCS251	F3, F14, F15
AFCS261	F3, F14, F15
AFCS311	F14, F15
AFCS351	F14, F15
AFCS431	F14, F15
AFG10FK	H26, H28
AFG30R	H25, H26, H27
AFG30RSV	H26
AFG34ST	H26
AFG50R	H25, H28
AFG50RSV	H28
AFHP111	F23
AFHP112	F23
AFHP21	F22
AFHP211	F23
AFHP212	F23
AFHP31	F22
AFHP41	F22
AFHP411	F23
AFHP412	F23
AFHP42	F22
AFHP81	F22
AFHP82	F22
AFHP83	F22
AFHP91	F22
AFHP92	F22
AFM82006	F101
AFSF12	F31, F32, F33
AFSF15	F31, F32, F33
AFSF18	F31, F32, F33

AFSF20	F31, F32, F33
AFSF21	F31, F32, F33
AFSF310	F31, F32, F33
AFSF350	F31, F32, F33
AFSF4	F31, F32, F33
AFSF430	F31, F32, F33
AFSF6	F31, F32, F33
AFSF8	F31, F32, F33
AFTFP2056	F95
AFTFP2062-1	F95
AFTRD1023	F95
AFTRD1460	F95
AFTRD1690	F95
AFTRD1946	F95
AFUP006	F6
AFUP006E	F6
AFUP007	F6
AFUP007E	F6
AFUP021	F6
AFUP021E	F6
AFUP041	F7
AFUP041E	F7
AFUP061	F7
AFUP061E	F7
AFUP091	F7
AFUP091E	F7
AFUP131	F7
AG-1	K9
AR2201	F17, F35
AR234401	F18, F36
AR246501	F17, F35
AR6060	F18, F36
AR6067	F18, F36
AR6122	F18, F36
AR6144	F18, F36
AR6154	F17, F35
AR6277	F17, F35
AR6321	F36
AR6322	F18
AR6324	F17, F35
AS2207	F19, F37
AS6121	F19, F37
AS6123	F19, F37
AS6159	F19, F37
AS6180	F19, F37
AS6182	F20, F38
AS6220	F38
AS6221	F20, F38
AS6316	F20, F38
AS6320	F20, F38
AS6323	F20, F38

B

PRODUCT	PAGE#
B120	A166
B120P	A167, A194
B120S	A167, A194
B120T	A167, A194
B32001P	A194
B32001T	A194
B32002	A170, A171, A194
B32003	A172, A173, A194
B32004	A174
B32004P	A175, A194
B32004S	A175, A194
B32004T	A175, A194
B32007	A180
B32007P	A181
B32008P	A183, A194
B32009P	A185, A194
B32009S	A185
B32009T	A185
B32011	A195
B32012	A187, A195
B32013	B10
B32014	B10
B32016P	A189, A195
B32016S	A189, A195
B32016T	A189, A195
B32020MAM	B10
B32021MAM	B10
B32022	A195
B32025P	A195

B continued

PRODUCT	PAGE#
B32025S	A195
B32025T	A195
B32026P	A195
B32026S	A195
B32026T	A195
B32030S	A195
B32030T	A195
B32038	A195
B32038P	A195
B32038T	A193
B84609	N2
B84645	N2, N6
B84650	N6
B84652	N6
B84702	N2, N6
B84745	N2, N6
B84746	N2, N6
B84816	N2, N6
B84830	N2
B84832	N2, N6
BK14150	H24
BK38100L	A93, A108, A110, A114

C

PRODUCT	PAGE#
CCV12000	G6, G15
CCV12000-08L	G14
CCV12000-08R	G14
CCV12000-10L	G14
CCV12000-10R	G14
CCV12001-08L	G14
CCV12001-08R	G14
CCV12001-10L	G14
CCV12001-10R	G14
CCV1500	G15
CCV1500-04	G13
CCV30100	G18
CCV3500	G15
CCV3500-08L	G13
CCV3500-08R	G13
CCV3501-08L	G13
CCV3501-08R	G13
CCV3550-08L	G13
CCV3550-08R	G13
CCV3551-08L	G13
CCV3551-08R	G13
CCV40100	G18
CCV4500	G6, G15
CCV4500-08L	G13
CCV4500-08R	G13
CCV4500-10L	G13
CCV4500-10R	G13
CCV4501-08L	G13
CCV4501-08R	G13
CCV4501-10L	G13
CCV4501-10R	G13
CCV50125	G18
CCV55015	G23
CCV55024	G5, G17, G20
CCV55025	G5, G17, G20
CCV55037	G5, G17, G20
CCV55038	G5, G17, G20
CCV55046	G5, G17, G21
CCV55047	G5, G17, G21
CCV55048	G5, G17, G21
CCV55049	G5, G17, G21
CCV55067	G5, G17, G22, G23
CCV55068	G5, G17, G22, G23
CCV55069	G5, G17, G22, G23
CCV55080	G8, G22, G23
CCV55081	G20, G21, G22
CCV55113	G5, G17
CCV55114	G5, G17
CCV55115	G5, G17
CCV55121	G7
CCV55200L	G23
CCV55200R	G23
CCV55218	G22, G23
CCV55220L	G22
CCV55220R	G22

Questions? Contact Technical Support:
800 344 3286 or 209 521 7860 ext. 7555
e-mail: racortech@parker.com

CCV55221	G22, G23
CCV55222-08	G8, G14, G22
CCV55222-10	G8, G14
CCV55222-12	G23
CCV55222-12-08	G8, G14
CCV55222-12-10	G8, G14, G23
CCV55223	G22
CCV55246L	G20
CCV55246R	G20
CCV55247	G20
CCV55248-04	G8
CCV55248-08	G8, G13, G20
CCV55248-10	G8, G13, G20
CCV55249	G20
CCV55250	G20
CCV55251	G20
CCV55267	G21
CCV55272L	G21
CCV55272R	G21
CCV55273	G21
CCV55274-08	G8, G14, G21
CCV55274-10	G8, G14, G21
CCV55275	G21
CCV55279	G8, G19, G20, G21
CCV55280	G20
CCV55374	G6
CCV55385	G6
CCV55390	G6
CCV55304-08	G13
CCV55365-04	G13, G19
CCV55404-08	G13, G19
CCV55540	G5, G17
CCV55547-02	G7
CCV55547-10	G7
CCV55570	G23
CCV6000	G6, G15
CCV6000-08L	G14
CCV6000-08R	G14
CCV6000-10L	G14
CCV6000-10R	G14
CCV6001-08L	G14
CCV6001-08R	G14
CCV6001-10L	G14
CCV6001-10R	G14
CCV60125	G18
CCV8000	G6, G15
CCV8000-08L	G14
CCV8000-08R	G14
CCV8000-10L	G14
CCV8000-10R	G14
CCV8001-10L	G14
CCV8001-10R	G14
CCV836-6-25	G5, G17
CCV836-6-50	G5, G17
CCV836-8-25	G5, G17
CCV836-8-50	G5, G17
CGH-10	B98
CGH-12	B98
CGH-16	B98
CGH-5	B98
CGH-6	B98
CGH-8	B98
CH2.75	A114
CH3.5	A110
CH4.5	A114
CPV	K12
CV1000	G24
CV1000SK	G24
CV1034-01	G5, G17
CV1038	G24
CV1100	G24
CV1100-01	G5, G17
CV1112	G24
CV1112-01	G5, G17
CV1114-01	G5, G17
CV1200	G24
CV12000	G7
CV12001	G1, G2
CV2114	G24
CV4501	G1, G2, G7
CV6001	G1, G2, G7
CV8001	G1, G2, G7
CV820	G24
CV820SK	G24

D

PRODUCT	PAGE#
D-10	K3
D-10V	K3
D-15	K3
D-15V	K3
D-20	K3
D-20V	K3
D-25	K3
D-5	K3
D-5V	K3
D-5Y	K3
DL-10	K6
DL-15	K6
DL-20	K6
DL-5	K6
DL-5Y	K6
DOC19P	H23, H24
DOC20PORX	H24
DOC22PC	H24
DOC22PO	H24
DOC25CPOX	H24
DOC28CTAOX	H24
DOC45K	H24
DR-6	F100
DTF-10	K7
DTF-10V	K7
DTF-15	K7
DTF-20	K7
DTF-25	K7
DTF-5	K7
DTF-5V	K7
DTF-5Y	K7
DTLF-10	K8
DTLF-15	K8
DTLF-20	K8
DTLF-5	K8
DTLF-5Y	K8
DU-3	F100
DU-4	F100
DU-5	F100

E

PRODUCT	PAGE#
EACP61508	F41
EACP61511	F41
EACP61513	F41
EACP61515	F41
EACP61517	F41
EACP61519	F41
EACP61521	F41
EACP61523	F41
EAF68110	F42, F43
EAF68111	F42, F43
EAF68120	F42, F43
EAF68130	F42, F43
EAF68132	F42, F43
EAF68133	F42, F43
EAF68140	F42, F43
EAF68150	F42, F43
EAF68160	F42, F43
EAF68170	F42, F43
EAF68175	F42, F43
EAF68175-1	F42, F43
EAF68178	F42, F43
EAF68179	F42, F43
EAF68182	F42, F43
EAF68185	F42, F43
EAVLR68189-2	F44, F45
EAVLR68190	F44, F45
EAVLR68191	F44, F45
EAVLR68193	F44, F45
EAVLR68193-2	F44, F45
EAVLR68193S	F44, F45
EAVLR68193S2	F44, F45
EAVLR68194	F44, F45
EAVLR68195	F44, F45
EAVLR68195-1	F44, F45
EAVLR68195S1	F44, F45
EAVLR68196-3	F44, F45
EAVLR68197	F44, F45
EAVLR68197-2	F44, F45
EAVLR68197S	F44, F45

EAVLR68197S2	F44, F45
EAVLR68198	F44, F45
EAVLR68198-1	F44, F45
EAVLR68199S	F44, F45

F

PRODUCT	PAGE#
FBO 10654C	E4
FBO 10658C	E4
FBO-60328-V	E4
FBO-10668C	E4
FBO 10678C	E4
FBO 10602FP	E4
FBO-10604FP	E4
FBO 10605FP	E4
FBO 10607FP	E4
FBO 10601FW	E4
FBO 10605FW	E4
FBO 10610FW	E4
FBO 10625FW	E4
FBO 1410FW	E4
FBO 14654C	E4
FBO 14658C	E4
FBO 14668C	E4
FBO 14678C	E4
FBO 14501FP	E4
FBO 14604FP	E4
FBO 14605FP	E4
FBO 14607FP	E4
FBO14601FW	E4
FBO 14605FW	E4
FBO 14625FW	E4
FBO-10	E1, E2, E3, E4
FBO-10-25M	E2
FBO-10-DP	E2
FBO-10-DPL	E2
FBO-10-MA	B51, B52, B55
FBO-14	E1, E2, E3, E4
FBO-14-25M	E2
FBO-14-DP	E2
FBO-14-DPL	E2
FBO-14-HTR	E1, E2
FBO-14-MA	B51, B52, B55
FFC-110-06	D1, D2, D4
FFC-110L-10	D1, D2, D5
FFC-112	D1, D2, D7
FFC-112-SAE	D2
FFC-113-NF-01	D1, D3, D9
FFC-114	D1, D3, D10,
FFC-116N	D1, D3, D12
FO-1-A	K5
FO-1-B	K5
FO-1-C	K5
FO-1-D	K5
FO-1-E	K5
FO-1-F	K5
FO-1-G	K5
FO-1-H	K5
FO-1-I	K5
FO-1-J	K5
FO-1-K	K5
FPM-050	A313
FPM-050	B107
FPM-PTC-12	A314
FPM-PTC-12	B106
FS240	A197

H

PRODUCT	PAGE#
H-180	K11
HA-180	K11
HEATER300	L6
HEATER500	L6
HF2	M2
HF3	M3
HF4	M4

I

PRODUCT	PAGE#
icountPD	N7
icountBS	N9
IN F19528	A213
IN F4595	A217
IN F830	A208
IN RK21057	A206, A210

O

L

PRODUCT	PAGE#
LFS 22821-01	I3
LFS 22821-02	I3
LFS 22821-03	I3
LFS 22821-04	I3
LFS 22821-05	I3
LFS 22821-06	I3
LFS 22822-01	I3
LFS 22822-02	I3
LFS 22822-03	I3
LFS 22822-04	I3
LFS 22822-05	I3
LFS 22822-06	I3
LFS 22825	I1
LFS 331	H5
LFS 331-3RE	H6
LFS 333	H5
LFS 335	H5
LFS 335-7RE	H6
LFS 339	H5
LFS 339-41RE	H6
LFS 801	H7, H8
LFS 802	H7, H8
LFS 802S	H9
LFS 820	H7, H9
LFS 825	H7, H9
LFS 880A	H7, H8
LFS RK760	H43
LFS RK761	H42
LFS RK763	H42
LFS RK800BHK	H44
LFS RK801BHK	H44
LFS RK859CEA	H19, H20
LFS RK859CEB	H19, H20
LFS RK859CL	H19, H20
LFS RK860F	H19, H20
LFS RK860FE	H19, H20
LFS RK866G	H19, H20
LFS RK873F	H19, H20
LG100	B83
LG50	B83
LP-149	K14
LP53-71	K14
LP-92	K14
N11-8ANG	H26, H28, H32

N

PRODUCT	PAGE#
N11-8ANG	H26, H28, H32

P

PRODUCT	PAGE#
P3	A199, A278
P4	A199, A278
P5	A199, A278
P843066	N6
P843702	N2, N6
P843850	N2
P849111ACM	N2, N6
PF F4604	A221
PF F829B	A205, A206
PF F831	A209, A210
PF L2016	H45
PF101	A203
PF201	A203
PFF19528	A214
PFF32423	A215, A216
PFF32715	A238
PFF4595	A218
PFF4596	A219, A220
PFF4606	A222
PFF5500	A225
PFF5501	A226
PFF5502	A227
PFF5503	A228
PFF5504	A229
PFF5505	A230
PFF5509	A231
PFF5510	B15
PFF5525	A232
PFF5527	A232, A233
PFF5550	A235

PFF5556	A236
PFF558095	A237
PFF830	A207
PFFDH12500	A212
PFFDW3525	A211, A211
PFFDW51125	A211
PFFG01	A239
PFFRK51216	A223
PFHH07500	A212
PFRK20567	A206, A208, A210
PR-35	K15
PS-1	K15
PS120	A17
PS120-01	A18
PS120-02	A18
PS-1A	K15
PS-2	K15
PS-2A	K15
PUMP-3P20	C1
PV4-15	K14
PV4-50	K14
PW10000	C2
PW12000	C2
PW16000	C2
PW18000	C2
PW3000	C2
PW-3000	C1
PW4000	C2
PW5000	C2
PW6000	C2
PW7000	C2
PW8000	C2
PWV-3000-4000	C3

R

PRODUCT	PAGE#
R11S	A27
R11T	A27
R120P	A89, A167, A194
R120S	A89, A167, A194
R120T	A89, A167, A194
R125P	A140, A141
R125S	A140, A141
R125T	A140, A141
R12P	A31, A35
R12PUL	B32
R12S	A31, A35
R12SUL	B32
R12T	A31, A35
R13P	A31
R13S	A31
R13T	A31
R15TUL	B36
R20TUL	B36
R25TUL	B36
R32281	A24
R45P	A77, A140
R45S	A77, A140
R45T	A77, A140
R58039-02	A280
R58039-10	A280
R58039-30	A280
R58060-02	A280
R58060-10	A280
R58060-30	A280
R58095-02	A280
R58095-10	A280
R58095-30	A280
R60P	A77, A140
R60S	A77, A140
R60T	A77, A140
R90P	A77, A140, A141
R90S	A77, A140, A141
R90T	A77, A140, A141
REF600LE	A295, A296, A297
REL 1230LT	H26, H28, H29
RFF15C	B90
RFF1C	B90
RFF3C	B90
RFF8C	B90
RHFM-A	E8
RHFM-A-1200	E8, E9
RHFM-A-200	E7, E8, E9

R continued

PRODUCT	PAGE#
RHFM-A-300	E8, E9
RHFM-A-600	E8, E9
RHFM-A-900	E8, E9
RHFS-5-100	E11
RHFS-5-1000	E11
RHFS-5-1200	E11
RHFS-5-200	E11
RHFS-5-300	E11
RHFS-5-400	E11
RHFS-5-600	E11
RHFS-5-800	E11
RK 10006	B32
RK 10012	A31, A35, A77, A164
RK 10012	B20, B32
RK 10063	B32
RK 1010	A31
RK 10109	A31, A164
RK 10110	A27, A43, A51, A88, A89, B32, B36, B41
RK 10117	B32
RK 10214	A31
RK 10214-01	B20
RK 10215	A31, A164
RK 10216	A35
RK 10222	A35, B20
RK 10226	B32
RK 10503	A31, A35, A164, A216, B20, B32
RK 110037A	A256
RK 11021-02	B66
RK 11026D	B64, B66
RK 11028B	A254, A256, B64, B66
RK 11037A	A254, B64, B66, A317
RK 11073	A269, B78
RK 11-1404	B64, B66
RK 11-1518	A309
RK 11-1570	A303
RK 11-1606-1	B64, B66
RK 11-1669	A306
RK 11-1679	A77, A252, A254, A256, B64, B66
RK 11-1776-05	B66
RK 11-1777	A262, B74
RK 11-1800-01	A254, A256
RK 11-1800-02	A254, A256
RK 11-1910	B62, B64, B66
RK 11-1927-01	A254, A256, A317
RK 11-1933-04	B64, B66
RK 11-1938	A150, A254, A256, A317
RK 11-1939	A254, A256, A317
RK 11-1945	A252, A254, A256, A317
RK 11-1952	A254, A256
RK 11233	A305
RK 11340	A216, B62, B64, B66
RK 11341	B62, B64, B66
RK 11542	A150, A254, A256, B64, B66, A317
RK 11734	B64, B66
RK 11734-01	B64, B66
RK 11815-102	B64, B66
RK 11815-103	A256, A260, A262, A265, A267, A317
RK 11838	A252, A258
RK 11851-103	A254
RK 11861	A310, A311
RK 11862	A311
RK 11868	B64, B66, B62, B64, B66
RK 11892	A265
RK 11911	A132
RK 12041	A43, A51, B36
RK 12870	A301, B101
RK 12871	A301, B101
RK 15010B	A252, B62
RK 15013D	A252, B62
RK 15035	A252, B62
RK 15078	A252, B62
RK 15081	A252, B62
RK 15090	B62
RK 15104	B62
RK 15211	A252, B62
RK 15279-01	B62
RK 15300	B70
RK 15301	A252
RK 15301-01	B62
RK 15329	A258, B70

RK 15378	A252, A258, B70
RK 15383-01	A252
RK 15383-02	A252
RK 15390	A258, B70
RK 15391	A258, B70
RK 16007	A132
RK 16070	A132
RK 16073	A132
RK 16076	A132
RK 16086	A132
RK 19002-02	B64
RK 19473	A260, A262, B72, B74
RK 19475	A260, A262, B72, B74
RK 19476	A258, A260, A262, A307, B70, B72, B74
RK 19486	A260, B72
RK 19490-12	A311
RK 19492	B48, B62, B64, B66, B68, B70, B72, B74, B76, B78
RK 19506	A260, A262, B72, B74
RK 20011-01	A43
RK 20022	A27, A43, A51, B32, B36, B41, B62, B64, B66
RK 20126	A31, A43, A51, A65, A68, A88, A89, A124, A125, A150, A164, A252, A254, A256, A317
RK 20163	A65
RK 20180	B22
RK 20366	A65
RK 20725	A301
RK 20725-24	A301, B101
RK 20726	A303
RK 20742	A43, A51, B36
RK 21030	A65
RK 21067	A252, A254, A256
RK 21069	A201, A252, A299, A300, B55, B62, B64, B66
RK 21113-13-06	A77
RK 21113-13-11	A88, A124, A140, A141, A283, A284
RK 2113-313	A77
RK 21145	A77
RK 21156	A208, A210
RK 21199	A77
RK 21363	A27
RK 21364	A27
RK 21411	B26
RK 21501	A140, A141, A283, A284
RK 22010	A65
RK 22061	A43, A51, A206, B36, B41
RK 22168	A89
RK 22244	A43, A51, B22, B26, B36
RK 22266-01	A77
RK 22266-02	A77
RK 22266-03	A77
RK 22266-04	A77
RK 22270	B41
RK 22323	A77, A88, A124
RK 22329	A77
RK 22333	A77, A88, A124
RK 22350-02	A43, A51
RK 22354-01	A43, A51
RK 22354-02	A43, A51
RK 22365-01	A77
RK 22368	A43, A51, B36
RK 22371	A299, A300
RK 22423	A124, A125
RK 22425	A88, B41
RK 22493	A77
RK 22609	B48
RK 22610	B48
RK 22610-01	A88
RK 22610-02	A88
RK 22616-01	A124
RK 22616-02	A124
RK 22682	B48
RK 22724	A65
RK 22724-01	A65
RK 22798	A284, A88, A89, A140, A141, A283
RK 30051	A164
RK 30058	A125
RK 30063	A65, A68, A89, A125
RK 30076	A164, B14, B28, B41
RK 30234	A77
RK 30467	A206, B20
RK 30473	A164
RK 30473-02	B14, B22, B26, B28

R continued

PRODUCT	PAGE#
RK 30475	B22, B24, B26
RK 30476	A31, A35, A43, A51, A65, A68, A88, A89, A124, A125, A140, A141, A150, A164, A201, A210, A283, A284, B22, B24, B26
RK 30488	A216
RK 30495	B41
RK 30765	A65
RK 30817	A27
RK 30876	A43, A51, A125
RK 30880	A299, A300, E6, E19
RK 30880E	A27
RK 30900	A68, A89, A125
RK 30902	A140, A283
RK 30925	A68, A89 A125
RK 30964	A31, A88, A89, A124, A125, A141, A143, A284, A299, A300
RK 30965	A68, A125
RK 31390-05-03	A13, B7
RK 31391	A13, B7
RK 31449	A218
RK 31547	A68
RK 31923	A310
RK 32036	A308
RK 32204	A150, A254, A256
PRODUCT	**PAGE#**
RK 32313	A310
RK 51216	A19, A224
RK 51217	A19
RK 58075	A201
RK 58109	A201
RK_10012	A183, A189
RK_10503	A169, A173, A175, A177, A179, A183, A185, A189
RK_20126	A189
RK_30076	A169, A171, A173, A175, A185, A187
RK_30476	A183
RK_30965	A177, A179, A181
RK012T-8-8	A150
RK10109	A183, A189
RK10215	A183, A189
RK10553	B20
RK11-1669	B104
RK11-1676	B103
RK11-1969	A306, B104
RK11-1970	A140, A141, A283, A284
RK11-1978	A254, A256, B78
RK11-2009	A254
RK11-2010	A256
RK11233	B103
RK11861	L8
RK11862	L8
RK12963	A151
RK14280-12	L8
RK14280-24	L8
RK14321	A304
RK14329	A304
RK14332	A304
RK15405	A252
RK19490-24	A311
RK19492	B96
RK20011-01	A51, B36
RK20025-01	A43, A51, B36, B37
RK20046-01	A43, A51, B36, B37
RK20049-01	A43, A51
RK20075-01	A43, A51, B36
RK20505	A167, A171, A187
RK20717	A43, A51
RK20725	B101
RK20726	B101
RK21069	A280, B100
RK21539	A167
RK21640	A177, A179, A181, A193
RK22350-02	A233
RK22098	A124, A125
RK22628	A298, B97
RK22895	A140, A283, A286
RK22897	B49
RK22898	B49
RK22902	A140, A143, A283
RK22933	A140, A144, A154, A283, A286

RK22934	A140, A141, A144, A154, A283, A284, A286, A286
RK22936	A298, B97, J5
RK22943	A140, A143, A283
RK22998	A88, A89, A124, A125
RK23007	A150
RK23017	A150
RK23018	A150
RK23019	A150
RK23045	A108, A110, A150
RK23046	A150
RK23080	A150
RK23085	A141, A284, A286
RK23087	A141, A144, A284, A286
RK23088	A141, A143, A284
RK30051	A169, A171, A173, A175, A185, A187, A191
RK30063	A167, A177, A179, A181, A193
RK30076	B12
RK30287	A169, A173, A175, A179
RK30467	A208
RK30475	A169, A171, A173, A175, A185, A187, A191, B12
RK30476	A187, A189, A191, A280, B12
RK30480	A167, A177, A179, A181, A193
RK30745-01	A169, A171, A173, A175, A185, A187, A191
RK30880	A167, A169, A171, A173, A175, A177, A179, A181, A183, A185, A187, A189, A191, A193, B100
RK30895	A169, A171, A173, A175, A185, A187, A191
RK30900	A167, A177, A179, A181, A193
RK30924	A169, A171, A173, A175, A185, A187, A191
RK30925	A167, A177, A179, A181, A193
RK30965	A167
RK31391	A5
RK31547	A193
RK31605	A298, B97
RK32037	A308
RK32274	A24
RK46267	H1, H2
RK50000	B89
RK50001	B89
RK50002	B88, B89
RK50003	B88, B89
RK50004	B89
RK50006	B89
RK50007	B88, B89
RK50008	B89
RK50009	B88, B89
RK50014	B89
RK50016	B88, B89
RK50021	B88, B89
RK50031	B88
RK50033	B88, B89
RK50052	B88
RK58075	A280
RK58107	A201, A280
RK6733	A150
RKAFGSV12	H26, H28, H29
RKP1912	A292
RKP1924	A292
RKSV7008	A150
RKVFG80	A150
RVCT-1050	E13, E14
RVCT-1250	E13, E14
RVCT-300	E13, E14
RVCT-500	E13, E14
RVCT-650	E13, E14
RVCT-850	E13, E14
RVFS-1	E15, E16, E17, E19
RVFS-1056-936	E23, E24, E25, E26, E27, E28
RVFS-1256-1136	E23, E24, E25, E26, E27, E28
RVFS-1456-1336	E23, E24, E25, E26, E27, E28
RVFS-1656-1536	E23, E24, E25, E26, E27, E28
RVFS-2	E15, E16, E17, E19
RVFS-2056-1936	E23, E24, E25, E26, E27, E28
RVFS-222-122	E23, E24, E25, E26, E27, E28
RVFS-244-233	E23, E24, E25, E26, E27, E28
RVFS-2456-2336	E23, E24, E25, E26, E27, E28
RVFS-2456-2736	E23, E24, E25, E26, E27, E28
RVFS-3	E15, E16, E17, E19
RVFS-344-233	E23, E24, E25, E26, E27, E28
RVFS-444-333	E23, E24, E25, E26, E27, E28
RVFS-456-436	E23, E24, E25, E26, E27, E28

R continued

PRODUCT	PAGE#
RVFS-656-536	E23, E24, E25, E26, E27, E28
RVFS-856-736	E23, E24, E25, E26, E27, E28
RVFS-D-50	E11
RVMF-1200-6-44	E30
RVMF-400-2-44	E30
RVMF-600-3-44	E30
RVMF-800-4-44	E30

S

PRODUCT	PAGE#
S2501	A5, A13, B7
S2502	A5, A13, B7
S3201	A168
S3201P	A169, A194
S3201S	A169, A194
S3201T	A169, A194
S3201TUL	B41
S3202	A171, A194
S3203	A173, A194
S3204P	A175, A194
S3204S	A175, A194
S3204T	A175, A194
S3204TUL	B41
S3205	A176, A177, A194
S3206	A178, A179, A194
S3207P	A68, A181, A194
S3207S	A68, A194
S3207T	A68, A194
S3208P	A183, A194
S3208S	A194
S3208T	A194
S3209P	A185, A194
S3209S	A185, A194
S3209T	A185, A194
S3211	A195
S3211TUL	B41
S3212	A187, A195
S3213	B12
S3214	B12
S3216P	A189, A195
S3216S	A189, A195
S3216T	A189, A195
S3220UL	B14
S3221TUL	B14
S3222	A195
S3223	A195
S3225P	A65, A195
S3225S	A65, A195
S3225T	A65, A195
S3226P	A65, A195
S3226S	A65, A195
S3226T	A65, A195
S3227	B22, B24
S3228TUL	B22
S3229	A191, A195
S3230P	A195
S3230S	A195
S3230T	A195
S3232	B26
S3232UL	B26, B28
S3238	A68, A193, A195
S3238P	A68, A195
S3240	B20
SK49012	K9
SK49013	K9
SK49014	K9
SK49015	K9
SP-1	K9
STV	K13
SV-4-12	K10
SV-4-24	K10
SVK-1	K10
SVK-1A	K10
SVK-2	K10
SVK-2A	K10
SW-32	C4

W

PRODUCT	PAGE#
WFH424	A91
WFH4732	A93
WFH4736	A93
WFH4738	A93
WFH5038X	A105
WFH525	A98, A103, A112
WFH525/ACV	A99, A103, A112
WFH525EHA	A100, A103
WFH5726B	A105, A108, A110
WFH5726X	A93, A114
WFH5730P	A93, A105, A108, A110
WFH5730X	A114
WFH5731B	A114
WFH5731C	A93, A114
WFH5731K	A93, A105, A108, A110
WFH5731P	A108
WFH5732	A105, A108, A110, A114
WFH5732/30	A105, A108, A110, A114
WFH5736	A105, A108, A110
WFH5736R	A114
WFH5736S	A108, A114
WFH5738VX	A110
WFH5738X	A108, A114
WFH5742	A93, A105, A108, A114
WFH5742UX	A110
WFH5750K	A105, A108, A110
WFH5750K/30	A105, A108, A110
WFH5760	A93, A105, A108, A110
WFH5760X	A114
WFH750K	A93
WHF500	A97, A103
WK-1A	K12
WK-1B	K12

X

PRODUCT	PAGE#
X-65	F100

O

Offer Of Sale

The items described in this document are hereby offered for sale by Parker Hannifin Corporation, its subsidiaries or its authorized distributors. This offer and its acceptance are governed by the provisions stated on the separate page of this document entitled 'Offer of Sale'.

Racor Limited Warranties Statement

All products manufactured or distributed by Racor are subject to the following, and only the following, LIMITED EXPRESS WARRANTIES, and no others: For a period of one (1) year from and after the date of purchase of a new Racor product, Racor warrants and guarantees only to the original purchaser-user that such a product shall be free from defects of materials and workmanship in the manufacturing process. The warranty period for pumps and motors is specifically limited to ninety (90) days from date of purchase. A product claimed to be defective must be returned to the place of purchase. Racor, at its sole option, shall replace the defective product with a comparable new product or repair the defective product. This express warranty shall be inapplicable to any product not properly installed and properly used by the purchaser-user or to any product damaged or impaired by external forces. THIS IS THE EXTENT OF WARRANTIES AVAILABLE ON THIS PRODUCT. RACOR SHALL HAVE NO LIABILITY WHATSOEVER FOR CONSEQUENTIAL DAMAGES FLOWING FROM THE USE OF ANY DEFECTIVE PRODUCT OR BY REASON OF THE FAILURE OF ANY PRODUCT. RACOR SPECIFICALLY DISAVOWS ALL OTHER WARRANTIES, EXPRESS OR IMPLIED INCLUDING, WITHOUT LIMITATION, ALL WARRANTIES OF FITNESS FOR A PARTICULAR PURPOSE (EXCEPT FOR THOSE WHICH APPLY TO PRODUCT OR PART THEREOF THAT IS USED OR BOUGHT FOR USE PRIMARILY FOR PERSONAL, FAMILY, OR HOUSEHOLD PURPOSES), WARRANTIES OF DESCRIPTION, WARRANTIES OF MERCHANTABILITY, TRADE USAGE OR WARRANTIES OR TRADE USAGE.

Warning

Failure or improper selection or improper use of the products and/or systems described herein or related items can cause death, personal injury and property damage. This document and other information from Parker Hannifin Corporation, its subsidiaries and authorized distributors provide product and/or system options for further investigation by users having technical expertise. It is important that you analyze all aspects of your application and review the information concerning the product or system in the current product catalog. Due to the variety of operating conditions and applications for these products or systems, the user, through its own analysis and testing, is solely responsible for making the final selection of the products and systems and assuring that all performance, safety and warning requirements of the applications are met. The products described herein, including with limitation, product features, specifications, designs, availability and pricing, are subject to change by Parker Hannifin Corporation and its subsidiaries at any time without notice.

The following statement is required pursuant to proposition 65, applicable in the State of California: 'This product may contain a chemical known to the State of California to cause cancer or reproductive toxicity'.

Notice

Racor's policy is one of continual improvement in design and manufacturing to insure still finer products; therefore, specifications, equipment and product information, while correct at the time of publication, is subject to change without notice. PARKER HANNIFIN CORPORATION, RACOR DIVISION is continually striving to provide our customers the world's best products, customer assistance and product information. Comments and suggestions on products, customer assistance, and publications are always welcomed. Please call us at (800) 344-3286 or (209) 521-7860, 8 AM to 5 PM, Pacific Time, or use our 24 hour fax line at (209) 529-3278. Catalog created and edited by Paul Sale and Vern Hoffman.

Racor Division, Technical Publications Department. Parts Catalog #7480H, September 2009. Copyright, PARKER HANNIFIN CORPORATION, 2009. All Rights Reserved.

Offer of Sale

The items described in this document and other documents or descriptions provided by Parker Hannifin Corporation, its subsidiaries and its authorized distributors are hereby offered for sale at prices to be established by Parker Hannifin Corporation, its subsidiaries and its authorized distributors. This offer and its acceptance by any customer ("Buyer") shall be governed by all the following Terms and Conditions. Buyer's order for any such item, when communicated to Parker Hannifin Corporation, its subsidiary or an unauthorized distributor ("Seller") verbally or in writing, shall constitute acceptance of this offer.

1. Terms and Conditions of Sale: All descriptions, quotations, proposals, offers, acknowledgements, acceptances and sales of Seller's products are subject to and shall be governed exclusively by the terms and conditions stated herein. Buyer's acceptance of any offer to sell is limited to these terms and conditions. Any term or condition in addition to, or inconsistent with those stated herein, proposed by Buyer in any acceptance of an offer by Seller, are hereby objected to. No such additional, different or inconsistent terms and conditions shall become part of the contract between Buyer and Seller unless expressly excepted in writing by Seller. Seller's acceptance of any offer to purchase by Buyer is expressly conditional upon Buyer's assent to all the terms and conditions stated herein, including any terms in addition to, or inconsistent with those contained in Buyer's offer. Acceptance of Seller's products shall in all events constitute such assent.

2. Payment: Payment shall be made by Buyer net 30 days from the date of delivery of the items purchased hereunder. Amounts not timely paid shall bear interest at the maximum rate permitted by law for each month or portion thereof that the Buyer is late in making payment. Any claims by Buyer for omissions or shortages in a shipment shall be waived unless Seller receives notice thereof within 30 days after Buyer's receipt of the shipment.

3. Delivery: Unless otherwise provided on the face hereof, delivery shall be made F.O.B. Seller's plant. Regardless of the method of delivery, however, risk of loss shall pass to Buyer upon Seller's delivery to a carrier. Any delivery dates shown are approximate only and Seller shall have no liability for any delays in delivery.

4. Warranty: Seller warrants that the items sold hereunder shall be free from defects in material or workmanship for a period of 12 months from date of shipment from Parker Hannifin Corporation. The warranty period for pumps and motors is specifically limited to 90 days from date of purchase. THIS WARRANTY COMPRISES THE SOLE AND ENTIRE WARRANTY PERTAINING TO ITEMS PROVIDED HEREUNDER. SELLER MAKES NO OTHER WARRANTY, GUARANTEE, OR REPRESENTATION OF ANY KIND WHATSOEVER. ALL OTHER WARRANTIES, INCLUDING BUT NOT LIMITED TO, MERCHANTABILITY AND FITNESS FOR PURPOSE, WHETHER EXPRESS, IMPLIED, OR ARISING BY OPERATION OF LAW, TRADE USAGE, OR COURSE OF DEALING ARE HEREBY DISCLAIMED.

NOTWITHSTANDING THE FOREGOING, THERE ARE NO WARRANTIES WHATSOEVER ON ITEMS BUILT OR ACQUIRED WHOLLY OR PARTIALLY, TO BUYER'S DESIGNS OR SPECIFICATIONS.

5. Limitation of Remedy: SELLER'S LIABILITY ARISING FROM OR IN ANY WAY CONNECTED WITH THE ITEMS SOLD OR THIS CONTRACT SHALL BE LIMITED EXCLUSIVELY TO REPAIR OR REPLACEMENT OF THE ITEMS SOLD OR REFUND OF THE PURCHASE PRICE PAID BY BUYER, AT SELLER'S SOLE OPTION. IN NO EVENT SHALL SELLER BE LIABLE FOR ANY INCIDENTAL, CONSEQUENTIAL OR SPECIAL DAMAGES OF ANY KIND OR NATURE WHATSOEVER, INCLUDING BUT NOT LIMITED TO LOST PROFITS ARISING FROM OR IN ANY WAY CONNECTED WITH THIS AGREEMENT OR ITEMS SOLD HEREUNDER, WHETHER ALLEGED TO ARISE FROM BREACH OF CONTRACT, EXPRESS OR IMPLIED WARRANTY, OR IN TORT, INCLUDING WITHOUT LIMITATION, NEGLIGENCE, FAILURE TO WARN OR STRICT LIABILITY.

6. Changes, Reschedules and Cancellations: Buyer may request to modify the designs or specifications for the items sold hereunder as well as the quantities and delivery dates thereof, or may request to cancel all or part of this order, however, no such requested modification or cancellation shall become part of the contract between Buyer and Seller unless accepted by Seller in a written amendment to this Agreement. Acceptance of any such requested modification or cancellation shall be at Seller's discretion, and shall be upon such terms and conditions as Seller may require.

7. Special Tooling: A tooling charge may be imposed for any special tooling, including without limitation, dies, fixtures, molds and patterns, acquired to manufacture items sold pursuant to this contract. Such special tooling shall be and remain Seller's property notwithstanding payment of any charges by Buyer. In no event will Buyer acquire any interest in apparatus belonging to Seller which is utilized in the manufacture of the items sold hereunder, even if such apparatus has been specially converted or adapted for such manufacture and notwithstanding any charges paid by Buyer. Unless otherwise agreed, Seller shall have the right to alter, discard or otherwise dispose of any special tooling or other property in its sole discretion at any time.

8. Buyer's Property: Any designs, tools, patterns, materials, drawings, confidential information or equipment furnished by Buyer, or any other items which become Buyer's property, may be considered obsolete and may be destroyed by Seller after two (2) consecutive years have elapsed without Buyer placing an order for the items which are manufactured using such property. Seller shall not be responsible for any loss or damage to such property while it is in Seller's possession or control.

9. Taxes: Unless otherwise indicated on the face hereof, all prices and charges are exclusive of excise, sales, use, property, occupational or like taxes which may be imposed by any taxing authority upon the manufacture, sale or delivery of the items sold hereunder. If any such taxes must be paid by Seller or if Seller is liable for the collection of such tax, the amount thereof shall be in addition to the amounts for the items sold. Buyer agrees to pay all such taxes or to reimburse Seller therefore upon receipt of its invoice. If Buyer claims exemption from any sales, use or other tax imposed by any taxing authority, Buyer shall save Seller harmless from and against any such tax, together with any interest or penalties thereon which may be assessed if the items are held to be taxable.

10. Indemnity for Infringement of Intellectual Property Rights: Seller shall have no liability for infringement of any patents, trademarks, copyrights, trade dress, trade secrets or similar rights except as provided in this Part 10. Seller will defend and indemnify Buyer against allegations of infringement of U.S. patents, U.S. trademarks, copyrights, trade dress and trade secrets (hereinafter 'Intellectual Property Rights'). Seller will defend at its expense and will pay the cost of any settlement or damages awarded in an action brought against Buyer based on an allegation that an item sold pursuant to this contract infringes on the Intellectual Property Rights of a third party. Seller's obligation to defend and indemnify Buyer is contingent on Buyer notifying Seller within ten (10) days after Buyer becomes aware of such allegations of infringement, and Seller having sole control over the defense of any allegations or actions including all negotiations for settlement or compromise. If an item sold hereunder is subject to a claim that it infringes the Intellectual Property Rights of a third party, Seller may, at its sole expense and option procure for Buyer the right to continue using said item, replace or modify said item so as to make it noninfringing, or offer to accept return of said item and return the purchase price less a reasonable allowance for depreciation. Notwithstanding the foregoing, Seller shall have no liability for claims of infringement based on information provided by Buyer, or directed to items delivered hereunder for which the designs are specified in whole or part of Buyer, or infringements resulting from the modification, combination or use in a system of any item sold hereunder. The foregoing provisions of this Part 10 shall constitute Seller's sole and exclusive liability and Buyer's sole and exclusive remedy for infringement of Intellectual Property Rights.

If a claim is based on information provided by Buyer or if the design for an item delivered hereunder is specified in whole or in part by Buyer, Buyer shall defend and indemnify Seller for all costs, expenses or judgements resulting from any claim that such item infringes any patent, trademark, copyright, trade dress, trade secret or any similar right.

11. Force Majeure: Seller does not assume the risk of and shall not be liable for delay or failure to perform any of Seller's obligation by reason of circumstances beyond the reasonable control of Seller (hereinafter 'Events of Force Majeure'). Events of Force Majeure shall include without limitation, accidents, acts of God, strikes or labor disputes, acts, laws, rules or regulations of any government or government agency, fires, floods, delays or failures in delivery of carries or suppliers, shortages of materials and any other cause beyond Seller's control.

12. Entire Agreement/Governing Law: The terms and conditions set forth herein, together with any amendments, modifications and any different terms or conditions expressly accepted by Seller in writing, shall constitute the entire Agreement concerning the items sold, and there are no oral or other representations or agreements which pertain thereto. This Agreement shall be governed in all respects by the law of the State of Ohio. No actions arising out of the sale of the items sold hereunder or this Agreement may be brought by either party more than two (2) years after the cause of action accrues.

Worldwide Manufacturing Locations

Parker Hannifin Corporation
Filtration Group
Global Headquarters
6035 Parkland Boulevard
Cleveland, OH 44124-4141
T 216 896 3000, F 216 896 4021
www.parker.com

North America

Compressed Air Treatment

Filtration & Separation/Balston
242 Neck Road
Haverhill, MA 01835-0723
T 978 858 0505, F 978 858 0625
www.parker.com/balston

Filtration & Separation/Finite
500 Glaspie Street, PO. Box 599
Oxford, MI 48371-5132
T 248 628 6400, F 248 628 1850
www.parker.com/finitefilter

Purification, Dehydration and Filtration Division
4087 Walden Avenue
Lancaster, NY 14086
T 716 685 4040, F 716 685 1010
www.airtek.com

Sales Office
5900-B Northwoods Parkway
Charlotte, NC 28269
T 704 921 9303, F 704 921 1960
www.domnickhunter.com

Engine Filtration & Water Purification

Racor
3400 Finch Road, PO Box 3208
Modesto, CA 95353
T 209 521 7860, F 209 529 3278
www.parker.com/racor

Racor
850 North West St., PO Box 6030
Holly Springs, MS 38635
T 662 252 2656, F 662 274 2118
www.parker.com/racor

Racor
302 Parker Drive
Beaufort, SC 29906
T 843 846 3200, F 843 846 3230
www.parker.com/racor

Racor -- Village Marine Tec.
2000 West 135th Street
Gardena, CA 90249
T 310 516 9911, F 310 538 3048
www.villagemarine.com

Hydraulic Filtration

Hydraulic Filter
16810 Fulton County Road #2
Metamora, OH 43540-9714
T 419 644 4311, F 419 644 6205
www.parker.com/hydraulicfilter

Process Filtration

Process Advanced Filtration
2340 Eastman Avenue
Oxnard, CA 93030
T 805 604 3400, F 805 604 3401
www.parker.com/processfiltration

© 2009 Parker Hannifin Corporation
Bulletin 7480H Rev - (September 2009)

Europe

Compressed Air Treatment

domnick hunter Industrial
Dukesway, Team Valley Trading Estate
Gateshead,Tyne & Wear
England NE11 OPZ
T +44 (0) 191 402 9000,
F +44 (0) 191 482 6296
www.domnickhunter.com

Hiross Zander
Padova Business Unit
Strada Zona Industriale 4
35020 S. Angelo di Piove Padova, Italy
T +39 049 9712 111, F +39 049 9701 911
www.dh-hiross.com

Hiross Zander
Essen Business Unit
Zander Aufbereitungstechnik GmbH
Im Teelbruch 118
D-45219 Essen, Germany
T +49 2054 9340, F +49 2054 934164
www.zander.de

Parker Gas Separations
Oude Kerkstraat 4
P O Box 258
4870 AG Etten- Leur, Netherlands
T +31 76 508 5300, F +31 76 508 5333

Engine Filtration & Water Purification

Racor
Shaw Cross Business Park
Churwell Vale Dewsbury,
WF12 7RD England
T +44 (0) 1924 487000,
F +44 (0) 1924 487038
www.parker.com/rfde

Racor Research & Development
Parker Hannifin GmbH & Co KG
Inselstrasse 3 – 5
70327 Stuttgart Germany
T +49 (0)711 7071 290-0,
F +49 (0)711 7071 290 -70
www.parker.com/racor

Hydraulic Filtration

Hydraulic Filter
Stieltjesweg 8, 6827 BV
P.O. Box 5008 6802 EA
Arnhem, Holland
T +31 26 3760376, F +31 26 3643620
www.parker.com/eurofilt

Urjala Operation
Salmentie 260
31700 Urjala as Finland
T +358 20 753 2500, F +358 20 753 2501
www.parker.com/fi

Condition Monitoring Center
Brunel Way Thetford,
Norfolk IP 24 1HP England
T +44 1842 763299, F +44 1842 756300
www.parker.com/cmc

Process Filtration

domnick hunter Process
Durham Road, Birtley Co. Durham,
DH3 2SF England
T +44 (0) 191 410 5121,
F +44 (0) 191 410 5312
www.domnickhunter.com

Asia Pacific

Australia
9 Carrington Road, Castle Hill
NSW 2154, Australia
T +61 2 9634 777, F +61 2 9899 6184
www. parker.com/australia

China
280 YunQiao Road
JinQiao Export Processing Zone
Shanghai 101206 China
T +86 21 5031 2525, F +86 21 5834 3714
www. parker.com/china

India
Plot EL 26, MIDC, TTC Industrial Area
Mahape, Navi Mumbai 400 709 India
T +91 22 5613 7081, 82, 83, 84, 85
F +91 22 2768 6618 6841
www. parker.com/india

Japan
626, Totsuka-cho, Totsuka-ku
Yokohama-shi, 244-0003 Japan
T +81 45 870 1522, F +81 45 864 5305
www.parker.com/japan

Korea
1-C Block, Industrial Complex of Jangan,
615-1, Geumui-Ri Jangan-Myeon,
Hwaseong-City Gyeonggi-Do, Korea
T +82 31 359 0771, F +82 31 359 0770
www.parker.com/korea

Singapore
11, Fourth Chin Bee Road
Singapore 619 702
T +65 6887 6300, F +65 6261 4929
www.parker.com/singapore

Thailand
1023 3rd Floor, TPS Building
Pattanakam Road, Suanluang,
Bangkok 10250 Thailand
T +66 2717 8140, F +66 2717 8148
www.parker.com/thailand

Latin America

Parker Comercio Ltda.
Filtration Division
Estrada Municipal Joel de Paula
900 Eugenio de Melo,
Sao Jose dos Campos
CEP 12225390 SP Brazil
T +55 12 4009 3500, F +55 12 4009 3529
www.parker.com/br

Pan American Division - Miami
7400 NW 19th Street, Suite A
Miami, FL 33128
T 305 470 8800 F 305 470 8808
www.parker.com/panam

Africa

Parker Hannifin Africa Pty Ltd
Parker Place, 10 Berne Avenue,
Aeroport Kempton Park,
1620 South Africa
T +27 11 9610700, F +27 11 3927213
www.parker.com/eu

Parker | Racor