aerospace
climate control
electromechanical
filtration
fluid & gas handling
hydraulics
pneumatics
process control
sealing & shielding

Click here to view bookmarks.

(Revised 12-16-2015)

Parker Global Air Preparation System

Catalog 0750-3 US

Parker

ENGINEERING YOUR SUCCESS.

RoHS COMPLIANT

DECLARATION OF COMPLIANCE (ROHS)

European Directive 2011/65/EU – RoHS (Restriction us of certain Hazardous Substances in electrical and electronic equipment), restricts the use of the 6 substances in the manufacture of specified electrical equipment.

Lead: Product containing lead and its compound (except for applications of lead as an alloying element by weight in steel up to 0.35%, in aluminium up to 0.4% and in copper alloys up to 4% and in circuit board solder) must not exceed 0.1% by weight

Mercury: The concentration level must not exceed 0.1% by volume

Cadmium: The concentration level must not exceed 0.01% by volume

Hexavalent Chromiou:

This is a corrosive protective finish used on our product line. Where this finish is utilized the Chromate solution is Hexavalent (Chrome 6) free.

Polybrominated Biphenyls (PBB):

The concentration level must not exceed 0.1% by weight. This substance is not know to be in any of our products.

Polybrominated Diphenyl Esters (PBDE):

The concentration level must not exceed 0.1% by weight. This substance is not know to be in any of our products.

CE

Global Air Preparation products supplied by Parker Hannifin have been designed and manufactured in accordance with “sound engineering practice”, as defined by Article 3 of Pressure Equipment Directive 97/23/EC.

REACh Compliant

Global Air Preparation product range is in compliance with REACH to ensure continued compliance additions to the list of SVHC (Substance of Very High Concern) are reviewed periodically.

Global Air Preparation product range has been third party Shock & Vibration tested independently in accordance to EN 61373 : 1999, Category 2

Ex ATEX

Following Ignition Hazard Assessments performed on the non-electrical Global Air Preparation products they are in accordance with the requirements of EN 13463-1:2009, it was considered that the equipment does not contain its own source of ignition, and therefore is not within the scope of directive 94/9/EC.

The products can be used in a Group II Category 2 environment assuming that the ATEX Directive and the following conditions are complied with:

- Installation and maintenance of the product must be undertaken by qualified personnel.
- Do not mount the products in an area where impact may occur.
- Filters must be used to limit the introduction of particles and to capture particles generated in service.
- Supply air quality must be within ISO 8573-1:2010 Class 1.4.2.
- Maximum working temperature to be as stated on product label.
- WARNING – pulsating pressure and/or a closed circuit can generate heat.
- Deposits of dust on the product must not exceed 5mm thickness. Refer to technical file for surface areas of plastics. The unit must be earthed via the compressed air supply line.
- The unit must not come into contact with liquid solvents, acids or alkalis Refer to technical file for chemicals known to be incompatible. Product cleaning must be undertaken using a method complying with the specifications of the ATEX zone, preferably by using mild soap and water or antistatic products.
- Regulators, Filter Regulators: Do not use Regulators or Filter Regulators within systems that can create vibration within the Regulator / Filter Regulator unit.
- Solenoid Operated Valves: Are suitable for use in an ATEX environment, (Group II Category 2) providing ATEX approved solenoids are fitted.
- Technical file available on request.

ISO

Global Air Preparation product range has been designed and tested in accordance with ISO flow testing, envelope integrity, and catalog data presented.

- Filters – ISO 5782-1 & ISO 5782-2: 1997
- Regulators- ISO 6953-1 & ISO 6953-2: 2000
- Lubricators- ISO 6301-1 & ISO 6301-2: 2009

⚠ WARNING

FAILURE OR IMPROPER SELECTION OR IMPROPER USE OF THE PRODUCTS AND/OR SYSTEMS DESCRIBED HEREIN OR RELATED ITEMS CAN CAUSE DEATH, PERSONAL INJURY AND PROPERTY DAMAGE.

This document and other information from Parker Hannifin Corporation, its subsidiaries and authorized distributors provide product and/or system options for further investigation by users having technical expertise. It is important that you analyze all aspects of your application including consequences of any failure, and review the information concerning the product or system in the current product catalog. Due to the variety of operating conditions and applications for these products or systems, the user, through its own analysis and testing, is solely responsible for making the final selection of the products and systems and assuring that all performance, safety and warning requirements of the application are met.

The products described herein, including without limitation, product features, specifications, designs, availability and pricing, are subject to change by Parker Hannifin Corporation and its subsidiaries at any time without notice.

Offer of Sale

The items described in this document are hereby offered for sale by Parker Hannifin Corporation, its subsidiaries or its authorized distributors. This offer and its acceptance are governed by the provisions stated on the separate page of this document entitled “Offer of Sale”.

© Copyright 2014, 2012, 2010 Parker Hannifin Corporation. All Rights Reserved

Parker Hannifin Corporation
Pneumatic Division
Richland, Michigan
www.parker.com/globalfrl

Global Air Preparation System

Introduction 4-13
Combinations
- P31 Mini Series 14
- P32 Compact Series 15
- P33 Standard Series 16
- Dimensions 17

Filters
- P31 Mini Series 18-19
- P32 Compact Series 20-21
- P33 Standard Series 22-23

Coalescing & Adsorber Filters
- P31 Mini Series 24-25
- P32 Compact Series 26-27
- P33 Standard Series 28-29

Regulators
- P31 Mini Series 30-31
- P31 Mini Common Port Regulator Series 32-33
- P32 Compact Series 34-35
- P32 Compact Semi-Precision Regulator Series 36-37
- P32 Compact Common Port Regulator Series 38-39
- P33 Standard Series 40-41

Filter / Regulators
- P31 Mini Series 42-43
- P32 Compact Series 44-45
- P32 Compact Semi-Precision Series 46-47
- P33 Standard Series 48-49

Lubricators
- P31 Mini Series 50-51
- P32 Compact Series 52-53
- P33 Standard Series 54-55

Proportional Regulators
- P31 Mini Series & P32 Compact Series 56-65

Dump Valve 66-67
Soft Start Valve 68-69
Combined Soft Start / Dump Valve 70-71
Redundant Safety Exhaust Valve 72-75
Solenoid Operators 76-77
Ball Valve / Lockout Valve 78
Manifold Blocks 79

Kits & Accessories
- P31 Mini Series 80
- P32 Compact Series 81
- P33 Standard Series 82
- Kits 83-86
- Pressure Switch PPS1 87

Safety Guide 88-89
Offer of Sale 90

Parker Hannifin Corporation
Pneumatic Division
Richland, Michigan
www.parker.com/globalfrl

Parker Global Air Preparation System

Global.
Modular.

Performance you need,
wherever you need it.

Full featured particulate and coalescing filters, regulators, filter/regulators, and lubricators are available with a wide range of standard options to meet air preparation needs.

The comprehensive Global Air Preparation System is available in three body sizes with either BSPP, BSPT, or NPT to accommodate thread type requirements.

Individual units can easily be assembled into various combinations, utilizing patented modular lightweight body connectors.

www.parker.com/globalfrl

Parker Hannifin Corporation
Pneumatic Division
Richland, Michigan
www.parker.com/globalfrl

Comprehensive Offering

P31 Mini Series
1/4" ports
40mm body width

P32 Compact Series
1/4", 3/8" and 1/2"
60mm body width

P33 Standard Series
1/2" and 3/4"
73mm body width

Filters

- 5µ particulate, 1.0µ and 0.01µ coalescing, and adsorber available as standard
- Transparent or metal bowl with manual or auto float drains standard

Regulators

- Available as stand alone, common port and electronic proportional
- Both relieving and non-relieving versions available

Filter / Regulators

- Compact design for space savings
- Available with all the same standard options as the filters and regulators

Lubricators

- Proportional oil delivery over a wide range of air flows
- Fill under pressure

Combinations

- Compact design for space savings
- Easily assembled
- Many configurations available

Accessories

- Solenoid operated soft start, quick dump, and soft start/ quick dump valves
- Manifold blocks
- Ball style lockout / shutoff valve
- Repair kits, gauges, etc.

Parker Hannifin Corporation
Pneumatic Division
Richland, Michigan
www.parker.com/globalfrl

Together we can power your application with clean, dry air

Fast cycle times, high product quality, and low downtime all require a clean, dry pneumatic system to function properly. Parker has what it takes to make sure pneumatic systems perform at their best.

Clean, dry pneumatic systems with Parker Global Air Preparation

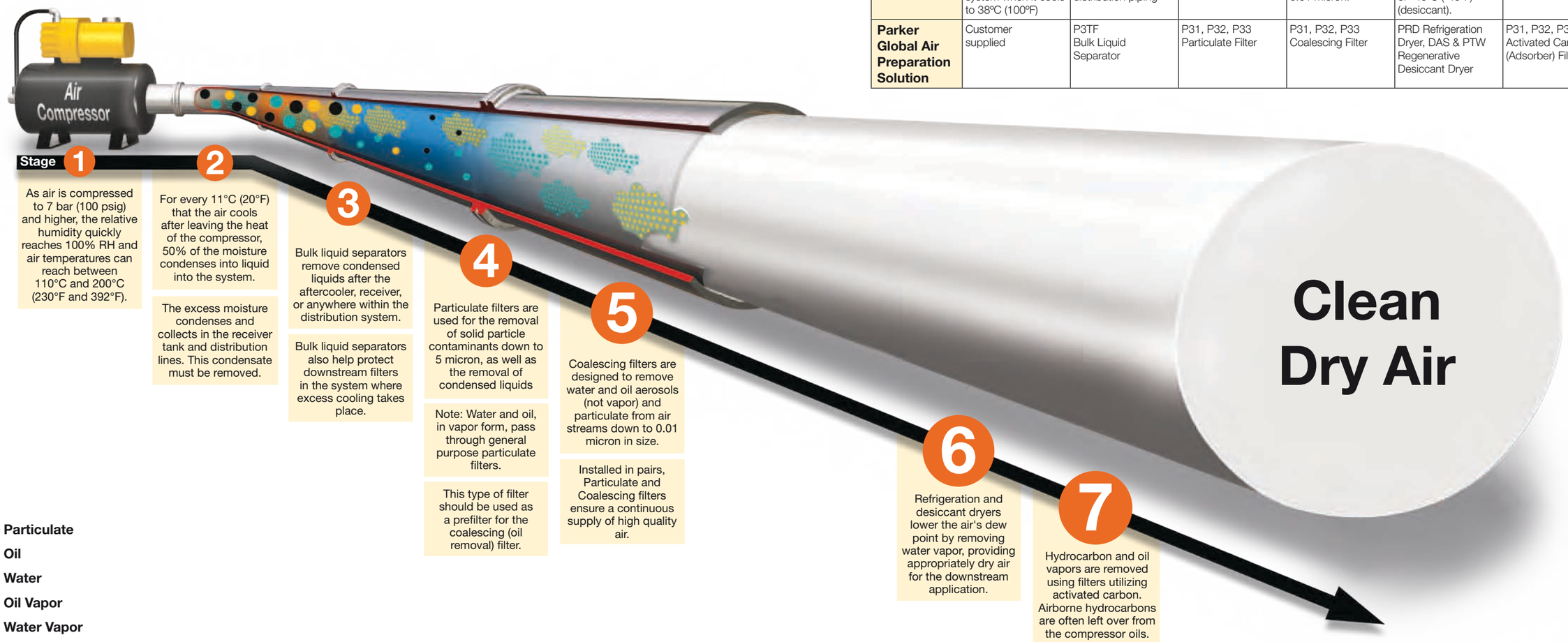

Catalog 0750-3 US
Global Air Preparation System
Parker Global Air Preparation Products
Introduction

Stages	1 2	3	4	5	6	7
Function	**Air Compressor**	**Bulk Liquid Removal**	**Particulate Filtration**	**Coalescing Filtration**	**Air Dryers**	**Hydrocarbon Removal**
Application	All pneumatic systems	Basic pneumatic systems	Basic pneumatic systems	Systems requiring highest quality air.	Systems requiring air with reduced moisture content	Systems requiring highest quality air for critical applications
Description	Air leaving the compressor room at 93ºC (200ºF) releases 95% of its moisture into the piping system when it cools to 38ºC (100ºF)	Removes bulk liquid contamination and protects filters where excess cooling takes place in the distribution piping	Removes solid particulates down to 5 micron, and the separation of bulk contaminants.	Removes liquid aerosols and submicron particulates (not vapor) down to 0.01 micron.	Removes water vapor from air stream. Dew point reduced down to 4ºC (40ºF) (refrigeration) or -40ºC (-40ºF) (desiccant).	Removal of odors and trace vapors for critical applications.
Parker Global Air Preparation Solution	Customer supplied	P3TF Bulk Liquid Separator	P31, P32, P33 Particulate Filter	P31, P32, P33 Coalescing Filter	PRD Refrigeration Dryer, DAS & PTW Regenerative Desiccant Dryer	P31, P32, P33 Activated Carbon (Adsorber) Filter

A completely modular air preparation system

Ball Valve

Padlock slide

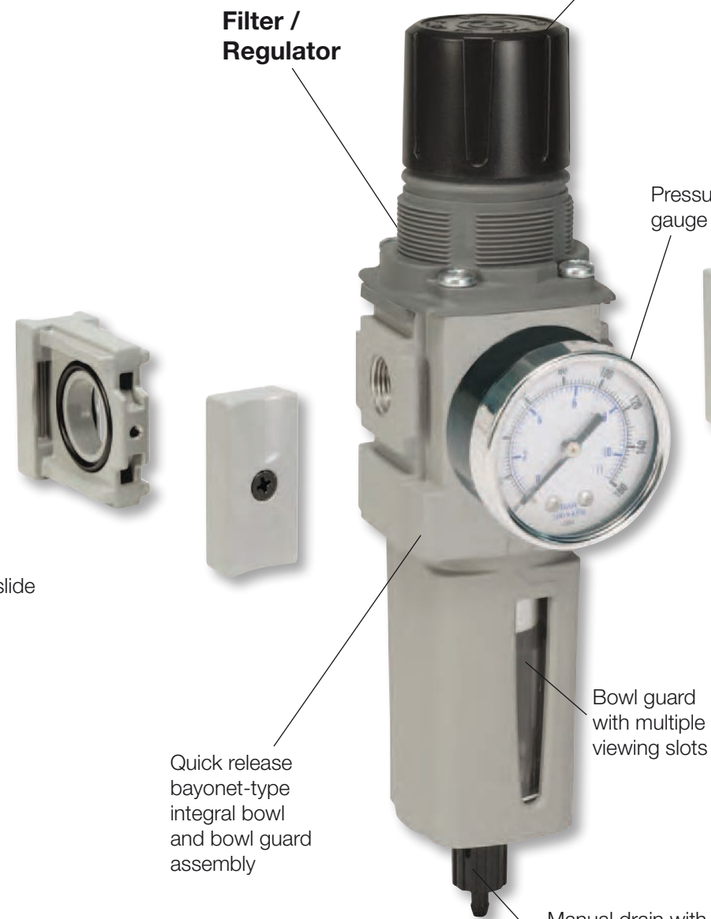

Filter / Regulator

Easy to adjust non-rising knob with snap-lock, preventing accidental change of set pressure

Pressure gauge

Quick release bayonet-type integral bowl and bowl guard assembly

Bowl guard with multiple viewing slots

Manual drain with pipe-away, auto drain available

Catalog 0750-3 US
Global Air Preparation System
Parker Global Air Preparation Products
Introduction

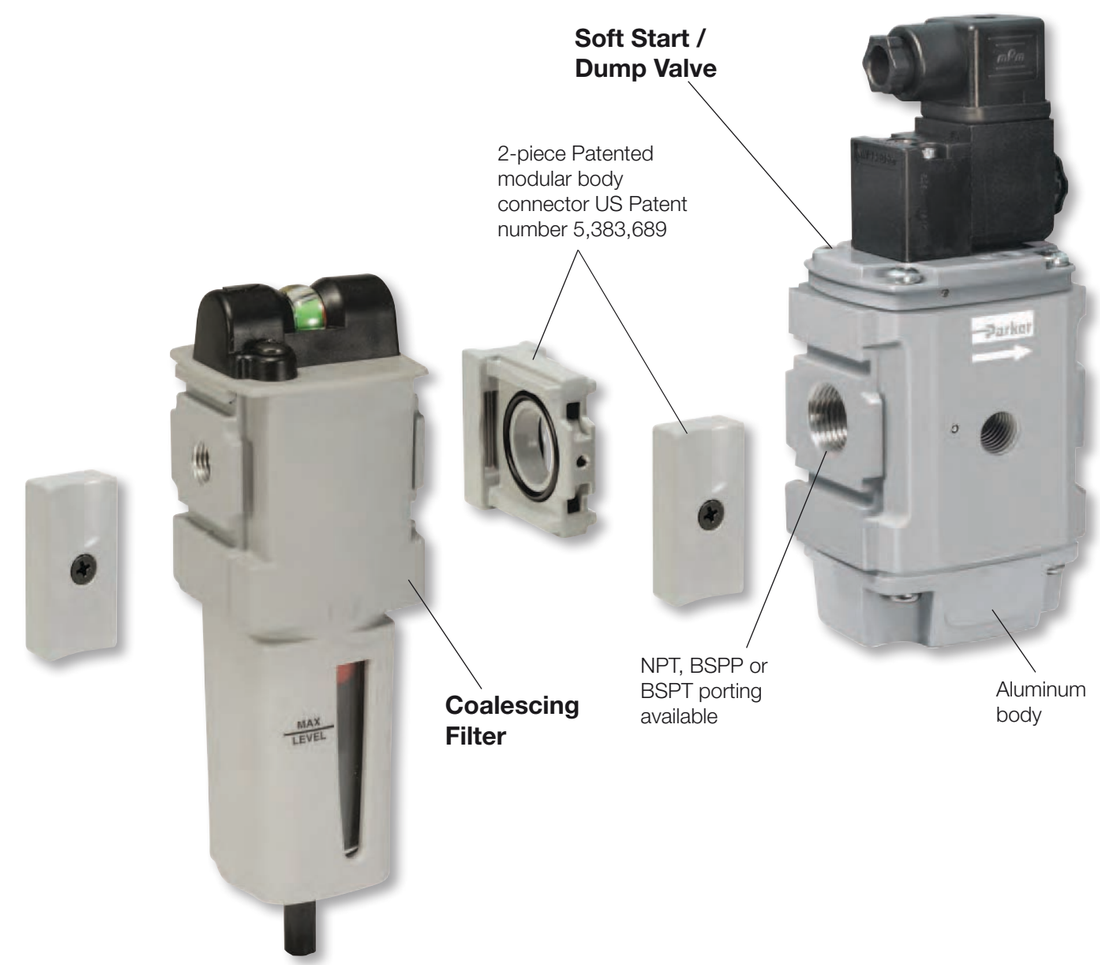

Soft Start / Dump Valve

2-piece Patented modular body connector US Patent number 5,383,689

Coalescing Filter

NPT, BSPP or BSPT porting available

Aluminum body

Air Preparation

P31 Mini Series

40mm body width
1/4" Ported

Flows up to:	dm^3/s	(SCFM)
Filter	12	(25)
Coalescer	3.6	(7.5)
Regulator	32	(68)
Filter/Regulator	10	(22)
Lubricator	19	(40)

Features:
- Space saving integral gauge
- Manifold style regulators available
- OSHA compliant shut-off valves
- Soft-Start & Quick Dump valves
- Electronic Proportional Regulator

P32 Compact Series

60mm body width
1/4", 3/8", & 1/2" Ported

Flows up to:	dm^3/s	(SCFM)
Filter	39	(82)
Coalescer	17	(36)
Regulator	78	(165)
Filter/Regulator	64	(136)
Lubricator	42	(90)

Features:
- Manifold style regulators available
- OSHA Compliant shut-off valves
- Soft-Start & Quick Dump valves
- Electronic Proportional Regulator

P33 Standard Series

73mm body width
1/2" & 3/4" Ported

Flows up to:	dm^3/s	(SCFM)
Filter	40	(85)
Coalescer	34	(72)
Regulator	111	(233)
Filter/Regulator	108	(230)
Lubricator	71	(150)

Features:
- OSHA Compliant shut-off valves
- Soft-Start & Quick Dump valves (Utilizes P32 size only)
- Electronic proportional regulator (Utilizes P32 size only)

Parker Hannifin Corporation
Pneumatic Division
Richland, Michigan
www.parker.com/globalfrl

Valves and Actuators

Mini Series Complimentary Products

The P31 Mini Series FRL's and accessories are well matched for use with these Parker valves and actuators.

Isys Micro

Moduflex

OSP-P

P1D

P1A

Compact Series Complimentary Products

The P32 Series FRL's & accessories are well matched for use with these Parker valves and actuators.

Isys ISO

Isys HA / HB

P1D

OSP-P

Standard Series Complimentary Products

The P33 Series FRL's & accessories are well matched for use with these Parker valves and actuators.

Isys ISO

Isys HA / HB

P1D

OSP-P

Parker Hannifin Corporation
Pneumatic Division
Richland, Michigan
www.parker.com/globalfrl

Complete Pneumatic System

Common Port Manifold Regulators

- Multiple output pressures (P2, P3, P4, etc.) with common inlet (P1)
- Available in two sizes P31 and P32
- Balanced valve design for accurate pressure regulation
- Outlet pressure ports in front and rear of unit.
- Multiple spring ranges available

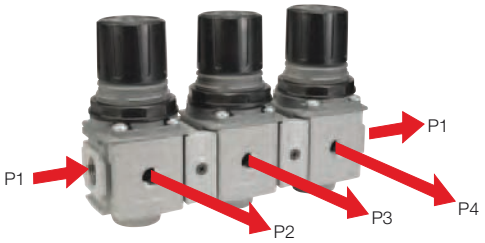

Electronic Proportional Regulator

- Electro-Pneumatic regulator
- Integrated systems control
- Accurate output pressure
- Micro parameter settings
- Selectable I/O parameters
- Quick, full flow exhaust
- LED display indicates output pressure
- No air consumption in steady state
- Multiple mounting options
- Protection to IP65

P31P Mini Series

P32P Compact Series

Semi Precision Regulator and Filter/Regulator

- Available in P32 compact series
- Fine adjustment sensitivity
- Good repeatability and minimal pressure drop
- Good flow capacity
- Light gray knob for easy identification

Optional Tamperproof Kits

- One facilitates the permanent tamperproofing of the Regulator and Filter/Regulator units
- Hinged black part clamps over control knob and is locked in place after sliding yellow cover over it
- Other allows for removable lockout/tagout tamperproofing
  - Four pad lock location holes tagout
  - Hinged locking clamp secures over existing knob via yellow cover which is slid over into place

Additional Options P32 Only (Consult factory for availability)

- T-Handle

- Preset and Tamperproof

- Preset
- Pressure Limiter

Parker Hannifin Corporation
Pneumatic Division
Richland, Michigan
www.parker.com/globalfrl

Application Guide

FRL to Valve: The chart below contains recommendations for the correct selection of Global Air Preparation units to suit the number and size of valves in a typical application.

	P31 Mini Series					P32 Compact Series						P33 Standard Series				
	Number of valves that would actuate at once															
	1	2	3	4	5	6	7	8	9	10	11	12	13	14	15	16
Moduflex 1																
Isys Micro																
HB / Viking Xtreme																
Moduflex 2																
HA / Global ISO																
							See Larger Parker FRL Offering									

Actuator to FRL: The chart below contains recommendations for the correct selection of Global Air Preparation units suitable for each cylinder size. If you have a tube length over 2 m, choose one tube size larger than the chart. The table is based on a Maximum cylinder speed of 0.5m/s

Cyl Ø mm Cyl Ø inches		Cylinder bore size													
		5 (5/16)	10 (7/16)	16 (9/16)	20 (3/4)	25 (1)	28 (1-1/8)	32 (1-1/4)	40 (1-1/2)	45 (1-3/4)	50 (2)	63 (2-1/2)	75 (3)	80 (3-1/4)	100 (4)
Tube Ø mm Tube Ø inches		Tube diameter external													
		4 (5/32)	4 (5/32)	4 (5/32)	6 (1/4)	6 (1/4)	6 (1/4)	6 (1/4)	8 (5/16)	8 (5/16)	8 (5/16)	10 (3/8)	10 (3/8)	12 (1/2)	12 (1/2)
Number of cylinders actuating at once	1														
	2														
	3														
	4														
	5														
	6														
	7														
	8														
	9														
	10														
		P31 Mini Series 					P32 Compact Series 			P33 Standard Series 			See Larger Parker FRL Offering		

Note: Data listed above is simply a guideline for a typical application only. Proper sizing and correct flow requirements must be taken into account.

Parker Hannifin Corporation
Pneumatic Division
Richland, Michigan
www.parker.com/globalfrl

Popular Combinations: Inlet pressure 10 bar (145 psig), Secondary pressure 6.3 bar (91.3 psig), 1 bar (14.5 psig) pressure drop.

Filter + Regulator + Lubricator Combinations, Poly bowl
5 micron element, 8 bar (116 psig) regulator + gauge and wall mounting brackets

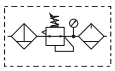

Port size	Flow		Manual drain	Weight	Pulse drain	Weight
1/4"	13 dm³/s	27 (scfm)	**P31CB92GEMN5LNW**	0.46 kg (1.01 lbs)	**P31CB92GEBN5LNW**	0.46 kg (1.01 lbs)

Filter/Regulator + Lubricator Combinations, Poly bowl
5 micron element, 8 bar (116 psig) regulator + gauge and wall mounting brackets

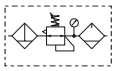

Port size	Flow		Manual drain	Weight	Pulse drain	Weight
1/4"	14 dm³/s	28 (scfm)	**P31CA92GEMN5LNW**	0.35 kg (0.77 lbs)	**P31CA92GEBN5LNW**	0.35kg (0.77 lbs)

Ball Valve + Filter + Regulator + Lubricator Combinations, Poly bowl
5 micron element, 8 bar (116 psig) regulator + gauge and wall mounting brackets

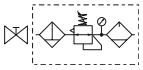

Port size	Flow		Manual drain	Weight	Pulse drain	Weight
1/4"	13 dm³/s	27 (scfm)	**P31QB92GEMN5LNW**	0.46 kg (1.01 lbs)	**P31QB92GEBN5LNW**	0.46 kg (1.01 lbs)

Ball Valve + Filter/Regulator + Lubricator Combinations, Poly bowl
5 micron element, 8 bar (116 psig) regulator + gauge and wall mounting brackets

Port size	Flow		Manual drain	Weight	Pulse drain	Weight
1/4"	14 dm³/s	28 (scfm)	**P31QA92GEMN5LNW**	0.35 kg (0.77 lbs)	**P31QA92GEBN5LNW**	0.35kg (0.77 lbs)

P 3 1 [ ] [ ] [ ] [ ] [ ]

Combination

B/V + Combination	**Q**
Combination + B/V	**X**
Combination	**C**

B/V = Ball valve

Thread type

BSPP	**1**
BSPT	2
NPT	**9**

Port size

1/4	**2**

Combination type*

F/R+L	**A**	F+Fc+Fa	**G**
F+R+L	**B**	F/R+Fc	**M**
F+Fc	**F**		

* Combination type
F = 5µ
Fc1 = 1µ
Fc = .01µ
Fa = Adsorber

Bowl type

Poly bowl with bowl guard	**G**
Metal bowl without sight gauge	**M**

Note: All bowl types are the same for each component

Example: If a "G" is specified for a F+L, both units would get a poly bowl with bowl guard.

Filter / Regulator coding
(use with codes: A M)

Filter coding
(use with combo codes: B F G). For multiple filters, repeat as needed

[ ] [ ]

Element

5µ Element	**E**
0.01µ Element	**C**
1µ Element	**9**
Adsorber	**A**

Drain type

Manual drain	**M**
Pulse drain	**B**

Regulator coding
(use with combo code: B)

[ ] [ ]

Relief / Adjustment

Non-rising knob	**N**

Adjustment range

With round gauge

2 bar; 30 psig; 0.2 MPa	**Z**
4 bar; 60 psig; 0.4 MPa	**M**
8 bar; 125 psig; 0.8 MPa	**G**
16 bar; 232 psig; 1.6 MPa	**J**§

Without gauge		With square gauge	
		psig	bar
2 bar; 30 psig; 0.2 MPa	**Y**		
4 bar; 60 psig; 0.4 MPa	**L**	30* = **1**	2* = **V**
8 bar; 125 psig; 0.8 MPa	**N**	60 = **3**	4 = **S**
16 bar; 232 psig; 1.6 MPa	**H**§	125 = **5**	8 = **T**

* Unit comes with 0-4 bar or 0-60 psig gauge respectively.
§ Not available with poly bowl with bowl guard.

Lubricator coding
(use with combo codes: A B)

[ ] [ ]

Lub type

Oil mist standard sight dome	**L**

Drain type

No drain; closed end	**N**

Assembly configuration

[ ]

Mounting

No bracket	**A**
Port blocks	**C***
Port blocks & wall brkt	**D***
Wall bracket	**W**

* For 3/8" Port Blocks please order separately. See Kits section.

Parker Hannifin Corporation
Pneumatic Division
Richland, Michigan
www.parker.com/globalfrl

Popular Combinations: Inlet pressure 10 bar (145 psig), Secondary pressure 6.3 bar (91.3 psig), 1 bar (14.5 psig) pressure drop.

Filter + Regulator + Lubricator Combinations, Poly bowl
5 micron element, 8 bar (116 psig) regulator + gauge and wall mounting brackets

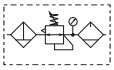

Port size	Flow		Manual drain	Weight	Auto drain	Weight
1/4"	20 dm³/s	42 (scfm)	**P32CB92GEMNGLNW**	1.29 kg (2.84 lbs)	**P32CB92GEANGLNW**	1.29 kg (2.84 lbs)
3/8"	32 dm³/s	68 (scfm)	**P32CB93GEMNGLNW**	1.29 kg (2.84 lbs)	**P32CB93GEANGLNW**	1.29 kg (2.84 lbs)
1/2"	40 dm³/s	85 (scfm)	**P32CB94GEMNGLNW**	1.29 kg (2.84 lbs)	**P32CB94GEANGLNW**	1.29 kg (2.84 lbs)

Filter/Regulator + Lubricator Combinations, Poly bowl
5 micron element, 8 bar (116 psig) regulator + gauge and wall mounting brackets

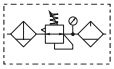

Port size	Flow		Manual drain	Weight	Auto drain	Weight
1/4"	22 dm³/s	45 (scfm)	**P32CA92GEMNGLNW**	1.03 kg (2.27 lbs)	**P32CA92GEANGLNW**	1.03 kg (2.27 lbs)
3/8"	33 dm³/s	70 (scfm)	**P32CA93GEMNGLNW**	1.03 kg (2.27 lbs)	**P32CA93GEANGLNW**	1.03 kg (2.27 lbs)
1/2"	43 dm³/s	90 (scfm)	**P32CA94GEMNGLNW**	1.03 kg (2.27 lbs)	**P32CA94GEANGLNW**	1.03 kg (2.27 lbs)

Ball Valve + Filter + Regulator + Lubricator Combinations, Poly bowl
5 micron element, 8 bar (116 psig) regulator + gauge and wall mounting brackets

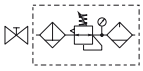

Port size	Flow		Manual drain	Weight	Auto drain	Weight
1/4"	20 dm³/s	42 (scfm)	**P32QB92GEMNGLNW**	1.29 kg (2.84 lbs)	**P32QB92GEANGLNW**	1.29 kg (2.84 lbs)
3/8"	32 dm³/s	68 (scfm)	**P32QB93GEMNGLNW**	1.29 kg (2.84 lbs)	**P32QB93GEANGLNW**	1.29 kg (2.84 lbs)
1/2"	40 dm³/s	85 (scfm)	**P32QB94GEMNGLNW**	1.29 kg (2.84 lbs)	**P32QB94GEANGLNW**	1.29 kg (2.84 lbs)

Ball Valve + Filter/Regulator + Lubricator Combinations, Poly bowl
5 micron element, 8 bar (116 psig) regulator + gauge and wall mounting brackets

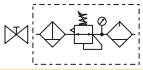

Port size	Flow		Manual drain	Weight	Auto drain	Weight
1/4"	22 dm³/s	45 (scfm)	**P32QA92GEMNGLNW**	1.03 kg (2.27 lbs)	**P32QA92GEANGLNW**	1.03 kg (2.27 lbs)
3/8"	33 dm³/s	70 (scfm)	**P32QA93GEMNGLNW**	1.03 kg (2.27 lbs)	**P32QA93GEANGLNW**	1.03 kg (2.27 lbs)
1/2"	43 dm³/s	90 (scfm)	**P32QA94GEMNGLNW**	1.03 kg (2.27 lbs)	**P32QA94GEANGLNW**	1.03 kg (2.27 lbs)

P 3 2

Combination

B/V + Combination	**Q**
Combination + B/V	**X**
Combination	**C**

B/V = Ball valve

Combination type*

F/R+L	**A**	F+Fc+Fa	**G**
F+R+L	**B**	F/R+Fc	**M**
F+Fc	**F**		

* Combination type
F = 5µ
Fc1 = 1µ
Fc = .01µ
Fa = Adsorber

Thread type

BSPP	**1**
BSPT	2
NPT	**9**

Port size

1/4	**2***
3/8	**3**
1/2	**4**

* Order combo Q or X: ball valve (BV) comes with 3/8 ports.

Bowl type

Poly bowl with bowl guard	**G**
Metal bowl without sight gauge	**M***
Metal bowl with sight gauge	**S**

* Not available when using lubricator.
Note: All bowl types are the same for each component.
Example: If a "G" is specified for a F+L, both units would get a poly bowl with bowl guard.

Filter / Regulator coding
(use with codes: A M)

Filter coding
(use with combo codes: B F G). For multiple filters, repeat as needed

Element

0.01µ Element	**C**
0.01µ Element with dpi	**D***
5µ Element	**E**
5µ Element with dpi	**F***
1µ Element	**9**
1µ Element with dpi	**Q***
Adsorber	**A**

* Not available with F/R.

Drain type

Auto drain	**A**
Manual drain	**M**

Regulator coding
(use with combo code: B)

Relief / Adjustment

Non-rising knob relieving	**N**

Adjustment range

With round gauge	
2 bar; 30 psig; 0.2 MPa	**Z**
4 bar; 60 psig; 0.4 MPa	**M**
8 bar; 125 psig; 0.8 MPa	**G**
17 bar; 250 psig; 1.7 MPa	**J**§

Without gauge		With square gauge	
		psig	bar
2 bar; 30 psig; 0.2 MPa	**Y**		
4 bar; 60 psig; 0.4 MPa	**L**	30* = **1**	2* = **V**
8 bar; 125 psig; 0.8 MPa	**N**	60 = **3**	4 = **S**
17 bar; 250 psig; 1.7 MPa	**H**§	125 = **5**	8 = **T**

* Unit comes with 0-4 bar or 0-60 psig gauge respectively.
§ Not available with poly bowl with bowl guard.

Lubricator coding
(use with combo codes: A B)

Lub type

Oil mist standard sight dome	**L**

Drain type

No drain; closed end	**N**

Assembly configuration

Mounting

No bracket	**A**
Port blocks	**C**
Port blocks & wall brkt	**D**
Wall bracket	**W**

Parker Hannifin Corporation
Pneumatic Division
Richland, Michigan
www.parker.com/globalfrl

Popular Combinations: Inlet pressure 10 bar (145 psig), Secondary pressure 6.3 bar (91.3 psig), 1 bar (14.5 psig) pressure drop.

Filter + Regulator + Lubricator Combinations, Poly bowl
5 micron element, 8 bar (116 psig) regulator + gauge and wall mounting brackets

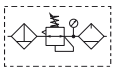

Port size	Flow		Manual drain	Weight	Auto drain	Weight
1/2"	43 dm^3/s	90 (scfm)	**P33CB94GEMNGLNW**	1.84 kg (4.06 lbs)	**P33CB94GEANGLNW**	1.84 kg (4.06 lbs)
3/4"	52 dm^3/s	110 (scfm)	**P33CB96GEMNGLNW**	1.84 kg (4.06 lbs)	**P33CB96GEANGLNW**	1.84 kg (4.06 lbs)

Filter/Regulator + Lubricator Combinations, Poly bowl
5 micron element, 8 bar (116 psig) regulator + gauge and wall mounting brackets

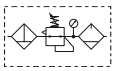

Port size	Flow		Manual drain	Weight	Auto drain	Weight
1/2"	52 dm^3/s	110 (scfm)	**P33CA94GEMNGLNW**	1.51 kg (3.33 lbs)	**P33CA94GEANGLNW**	1.51 kg (3.33 lbs)
3/4"	71 dm^3/s	150 (scfm)	**P33CA96GEMNGLNW**	1.51 kg (3.33 lbs)	**P33CA96GEANGLNW**	1.51 kg (3.33 lbs)

Ball Valve + Filter + Regulator + Lubricator Combinations, Poly bowl
5 micron element, 8 bar (116 psig) regulator + gauge and wall mounting brackets

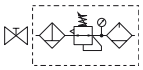

Port size	Flow		Manual drain	Weight	Auto drain	Weight
1/2"	43 dm^3/s	90 (scfm)	**P33QB94GEMNGLNW**	1.84 kg (4.06 lbs)	**P33QB94GEANGLNW**	1.84 kg (4.06 lbs)
3/4"	52 dm^3/s	110 (scfm)	**P33QB96GEMNGLNW**	1.84 kg (4.06 lbs)	**P33QB96GEANGLNW**	1.84 kg (4.06 lbs)

Ball Valve + Filter/Regulator + Lubricator Combinations, Poly bowl
5 micron element, 8 bar (116 psig) regulator + gauge and wall mounting brackets

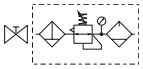

Port size	Flow		Manual drain	Weight	Auto drain	Weight
1/2"	52 dm^3/s	110 (scfm)	**P33QA94GEMNGLNW**	1.51 kg (3.33 lbs)	**P33QA94GEANGLNW**	1.51 kg (3.33 lbs)
3/4"	71 dm^3/s	150 (scfm)	**P33QA96GEMNGLNW**	1.51 kg (3.33 lbs)	**P33QA96GEANGLNW**	1.51 kg (3.33 lbs)

Filter / Regulator coding
(use with codes: A M)

P 3 3 [ ] [ ] [ ] [ ] [ ]

Combination

B/V + Combination	Q
Combination + B/V	X
Combination	C

B/V = Ball valve

Thread type

BSPP	1
BSPT	2
NPT	9

Port size

1/2	4
3/4	6

Combination type*

F/R+L	A	F+Fc+Fa	G
F+R+L	B	F/R+Fc	M
F+Fc	F		

* Combination type
F = 5µ
Fc1 = 1µ
Fc = .01µ
Fa = Adsorber

Bowl type

Poly bowl with bowl guard	G
Metal bowl without sight gauge	M*
Metal bowl with sight gauge	S

* Not available when using lubricator.
Note: All bowl types are the same for each component.

Example: If a "G" is specified for a F+L, both units would get a poly bowl with bowl guard.

Filter coding
(use with combo codes: B F G). For multiple filters, repeat as needed

Element

0.01µ Element	C
0.01µ Element with dpi	D*
5µ Element	E
5µ Element with dpi	F*
1µ Element	9
1µ Element with dpi	Q*
Adsorber	A

* Not available with F/R.

Drain type

Auto drain	A
Manual drain	M

Regulator coding
(use with combo code: B)

Relief / Adjustment

Non-rising knob relieving	N

Adjustment range

With round gauge	
2 bar; 30 psig; 0.2 MPa	Z
4 bar; 60 psig; 0.4 MPa	M
8 bar; 125 psig; 0.8 MPa	G
17 bar; 250 psig; 1.7 MPa	J*
Without gauge	
2 bar; 30 psig; 0.2 MPa	Y
4 bar; 60 psig; 0.4 MPa	L
8 bar; 125 psig; 0.8 MPa	N
17 bar; 250 psig; 1.7 MPa	H*

* Not available with poly bowl with bowl guard.

Lubricator coding
(use with combo codes: A B)

Lub type

Oil mist standard sight dome	L

Drain type

No drain; closed end	N

Assembly configuration

Mounting

No bracket	A
Port blocks	C
Port blocks & wall brkt	D
Wall bracket	W

Parker Hannifin Corporation
Pneumatic Division
Richland, Michigan
www.parker.com/globalfrl

Popular Combination Dimensions

mm (inches)

P31C

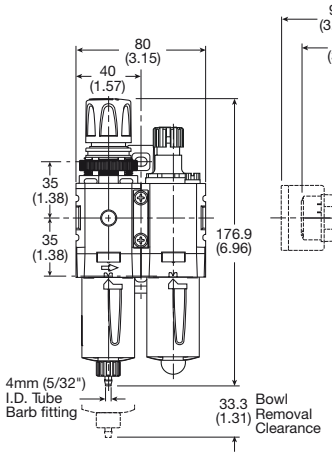

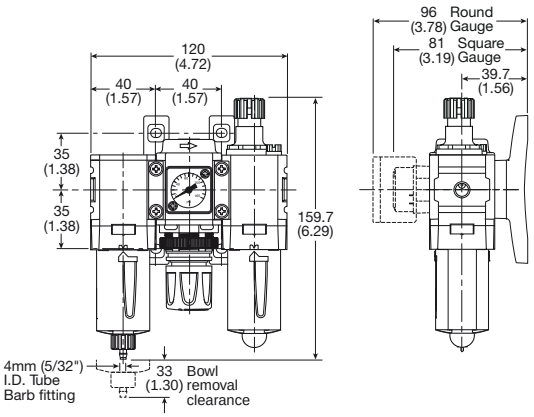

P32C

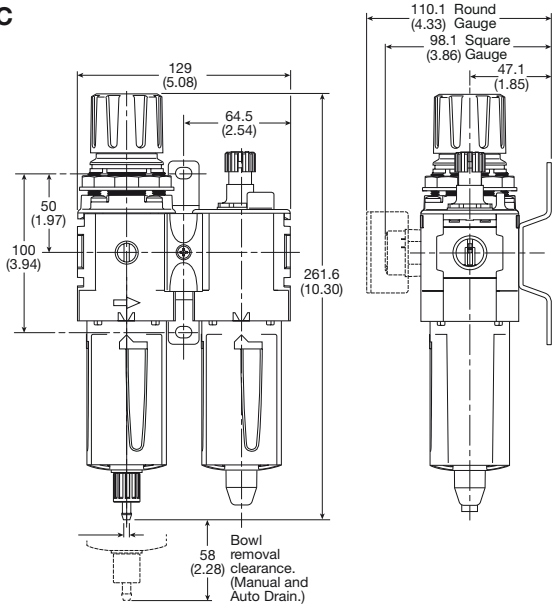

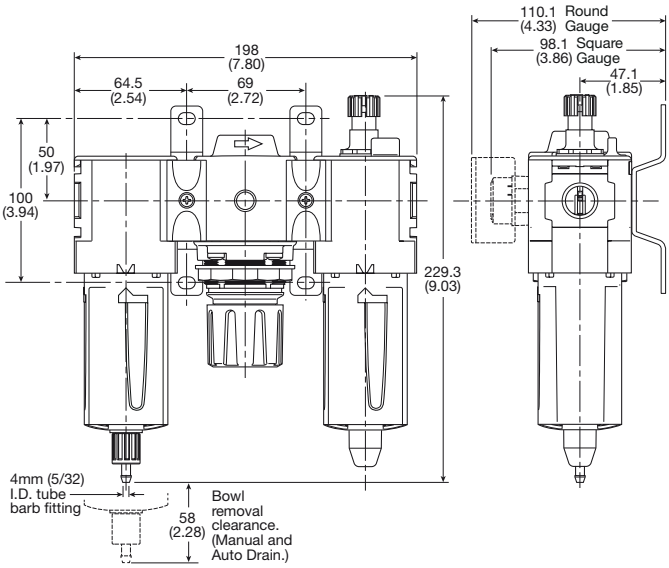

P33C

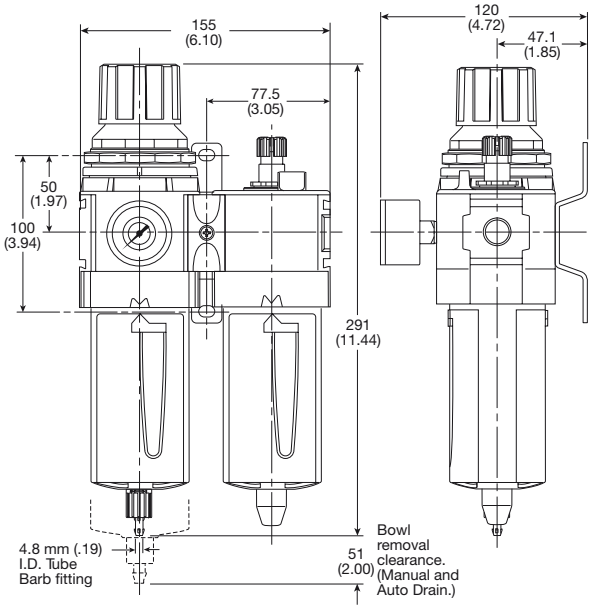

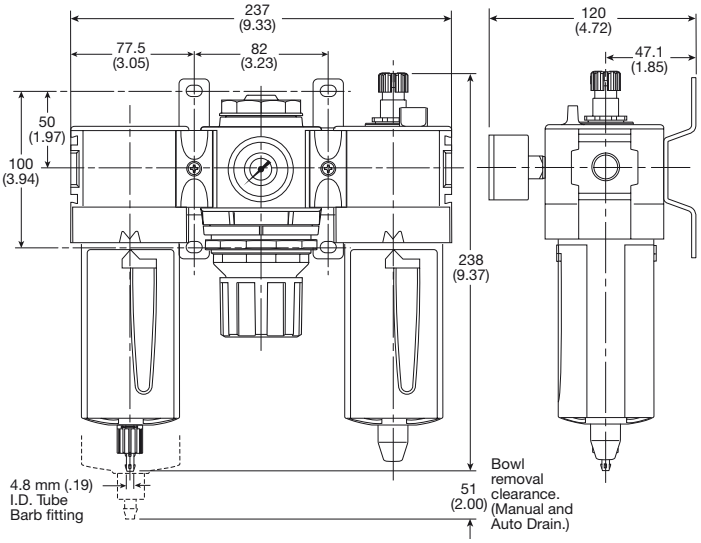

Parker Hannifin Corporation
Pneumatic Division
Richland, Michigan
www.parker.com/globalfrl

Mini Particulate Filter - P31

Symbols

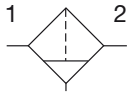

Manual drain

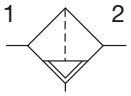

Pulse drain

- Integral 1/4" ports (NPT, BSPP & BSPT)
- High efficiency 5 micron element as standard
- Excellent water removal efficiency
- Robust but lightweight aluminum construction
- One hand operation for easy element cartridge removal
- Positive bayonet latch to ensure correct & safe fitting

Options:

P31FB 9 2 E G M N

Basic series

Global modular mini particulate filter	P31FB

Thread type

BSPP	**1**
BSPT	2
NPT	**9**

Port size

1/4	**2**

Element

5µ Element	**E**

Bowl type

G	**Poly bowl with bowl guard**
M	**Metal bowl without sight gauge**

Drain type

M	**Manual drain**
B	**Pulse drain**

Mounting

N	**No bracket**

Bold items are most common.

Port size	Description	Flow‡ dm^3/s (scfm)	Max. bar (psig)	Height mm (inches)	Width mm (inches)	Depth mm (inches)	Part number†
1/4"	Poly bowl - manual drain	12 (25)	10 (150)	124.8 (4.91)	40 (1.58)	40 (1.58)	**P31FB92EGMN**
1/4"	Poly bowl - pulse drain	12 (25)	10 (150)	119.6 (4.71)	40 (1.58)	40 (1.58)	**P31FB92EGBN**
1/4"	Metal bowl - manual drain	12 (25)	17 (250)	124.8 (4.91)	40 (1.58)	40 (1.58)	**P31FB92EMMN**
1/4"	Metal bowl - pulse drain	12 (25)	17 (250)	119.6 (4.71)	40 (1.58)	40 (1.58)	**P31FB92EMBN**

† **Standard part numbers shown in bold. For other models refer to Options chart above.**
‡ Flow with 6.3 bar (91.3 psig) inlet pressure and 0.34 (4.9 psig) pressure drop.

Parker Hannifin Corporation
Pneumatic Division
Richland, Michigan
www.parker.com/globalfrl

Specifications

Flow capacity*	1/4	12 dm^3/s (25 scfm)
Operating temperature	Plastic bowl Metal bowl	-10°C to 52°C (14°F to 125°F) -10°C to 65.5°C (14°F to 150°F)
Max. supply pressure	Plastic bowl Metal bowl	10 bar (150 psig) 17 bar (250 psig)
Standard filtration		5 micron
Useful retention†		12 cm^3 (0.4 US oz.)
Port size	BSPP / BSPT / NPT	1/4
Weight		0.11 kg (0.24 lbs)

* Inlet pressure 6.3 bar (91.3 psig). Pressure drop 0.34 bar (4.9 psig).
† Useful retention refers to volume below the quiet zone baffle.

Air quality:
Within ISO 8573-1: 1991 Class 3 (Particulates)
Within ISO 8573-1: 2001 Class 6 (Particulates)

Material Specifications

Body	Aluminum
Body cap	ABS
Bowl	Polycarbonate
Bowl guard	Nylon
Element retainer	Acetal
Baffle	Acetal
Filter element	Sintered polyethylene
Seals	Nitrile

Flow Charts

1/4 Filter

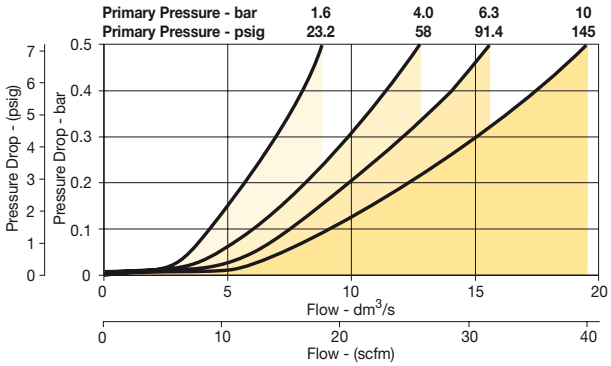

Dimensions mm (inches)

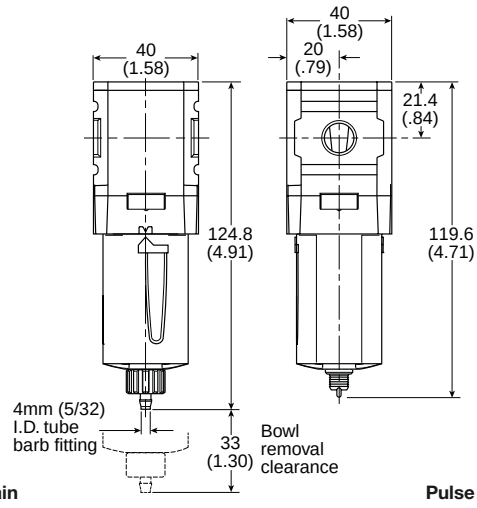

Manual Drain **Pulse Drain**

Repair and Service Kits

Plastic bowl / Bowl guard manual drain	**P31KB00BGM**
Metal bowl / w/o sight gauge manual drain	**P31KB00BMM**
Plastic bowl / Bowl guard pulse drain	**P31KB00BGB**
Metal bowl / w/o sight gauge pulse drain	**P31KB00BMB**
5µ particle filter element	**P31KA00ESE**
C-bracket (fits to body)	**P31KA00MW**
T-bracket with body connector	**P31KA00MT**
Body connector	**P31KA00CB**

Parker Hannifin Corporation
Pneumatic Division
Richland, Michigan
www.parker.com/globalfrl

Compact Particulate Filter - P32

Symbols

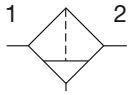

Manual drain

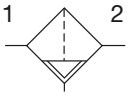

Auto drain

- Integral 1/4", 3/8" or 1/2" ports (NPT, BSPP & BSPT)
- High efficiency 5 micron element as standard
- Excellent water removal efficiency
- Robust but lightweight aluminum construction
- Positive bayonet latch to ensure correct & safe fitting

Options:

P32FB 9 2 E G M N

Basic series	
Global modular compact particulate filter	P32FB

Thread type	
BSPP	**1**
BSPT	2
NPT	**9**

Port size	
1/4	**2**
3/8	**3**
1/2	**4**

Element	
5µ Element	**E**

Bowl type	
G	**Poly bowl with bowl guard**
M	**Metal bowl without sight gauge**
S	**Metal bowl with sight gauge**

Drain type	
M	**Manual drain**
A	**Auto drain**

Mounting	
N	**No bracket**

Bold items are most common.

Port size	Description	Flow‡ dm^3/s (scfm)	Max. bar (psig)	Height mm (inches)	Width mm (inches)	Depth mm (inches)	Part number†
1/4"	Poly bowl - manual drain	24 (50)	10 (150)	190.3 (7.49)	60 (2.36)	60 (2.36)	**P32FB92EGMN**
1/4"	Poly bowl - auto drain	24 (50)	10 (150)	184.3 (7.26)	60 (2.36)	60 (2.36)	**P32FB92EGAN**
1/4"	Metal bowl - manual drain	24 (50)	17 (250)	190.3 (7.49)	60 (2.36)	60 (2.36)	**P32FB92ESMN**
1/4"	Metal bowl - auto drain	24 (50)	17 (250)	184.3 (7.26)	60 (2.36)	60 (2.36)	**P32FB92ESAN**
3/8"	Poly bowl - manual drain	37 (78)	10 (150)	190.3 (7.49)	60 (2.36)	60 (2.36)	**P32FB93EGMN**
3/8"	Poly bowl - auto drain	37 (78)	10 (150)	184.3 (7.26)	60 (2.36)	60 (2.36)	**P32FB93EGAN**
3/8"	Metal bowl - manual drain	37 (78)	17 (250)	190.3 (7.49)	60 (2.36)	60 (2.36)	**P32FB93ESMN**
3/8"	Metal bowl - auto drain	37 (78)	17 (250)	184.3 (7.26)	60 (2.36)	60 (2.36)	**P32FB93ESAN**
1/2"	Poly bowl - manual drain	39 (82)	10 (150)	190.3 (7.49)	60 (2.36)	60 (2.36)	**P32FB94EGMN**
1/2"	Poly bowl - auto drain	39 (82)	10 (150)	184.3 (7.26)	60 (2.36)	60 (2.36)	**P32FB94EGAN**
1/2"	Metal bowl - manual drain	39 (82)	17 (250)	190.3 (7.49)	60 (2.36)	60 (2.36)	**P32FB94ESMN**
1/2"	Metal bowl - auto drain	39 (82)	17 (250)	184.3 (7.26)	60 (2.36)	60 (2.36)	**P32FB94ESAN**

† **Standard part numbers shown in bold. For other models refer to Options chart above.**
‡ Flow with 6.3 bar (91.3 psig) inlet pressure and 0.34 (4.9 psig) pressure drop.

Parker Hannifin Corporation
Pneumatic Division
Richland, Michigan
www.parker.com/globalfrl

Specifications

Flow capacity*	1/4	24 dm^3/s (50 scfm)
	3/8	37 dm^3/s (78 scfm)
	1/2	39 dm^3/s (82 scfm)
Operating temperature	Plastic bowl	-25°C to 52°C (-13°F to 125°F)
	Metal bowl	-25°C to 65.5°C (-13°F to 150°F)
Max. supply pressure	Plastic bowl	10 bar (150 psig)
	Metal bowl	17 bar (250 psig)
Standard filtration		5 micron
Useful retention†		51 cm^3 (1.7 US oz.)
Port size	BSPP / BSPT / NPT	1/4, 3/8, 1/2
Weight		0.28 kg (0.62 lbs)

* Inlet pressure 6.3 bar (91.3 psig). Pressure drop 0.34 bar (4.9 psig).
† Useful retention refers to volume below the quiet zone baffle.

Air quality:
Within ISO 8573-1: 1991 Class 3 (Particulates)
Within ISO 8573-1: 2001 Class 6 (Particulates)

Material Specifications

Body		Aluminum
Body cap		ABS
Bowls	Plastic bowl	Polycarbonate
	Metal bowl	Aluminum
Bowl guard		Nylon
Deflector		Polypropylene
Element retainer / Baffle		Acetal
Filter element		Sintered polyethylene
Seals		Nitrile
Sight gauge	Metal bowl	Nylon

Dimensions mm (inches)

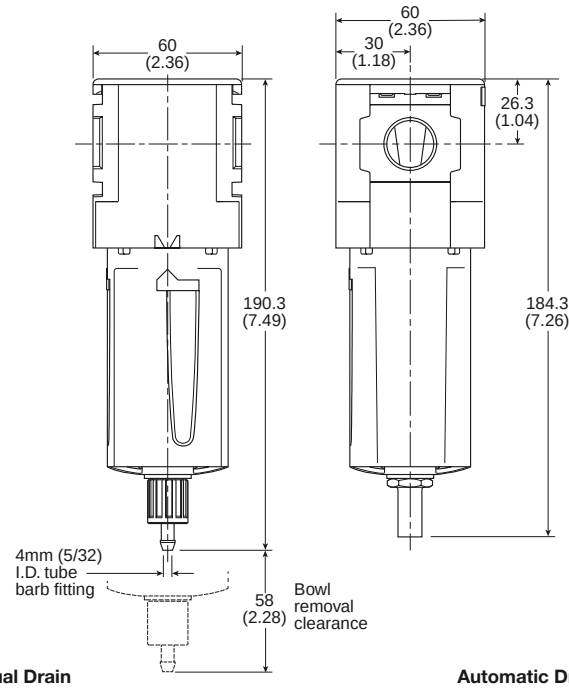

Manual Drain **Automatic Drain**

Flow Charts

P32FB 1/4" Filter

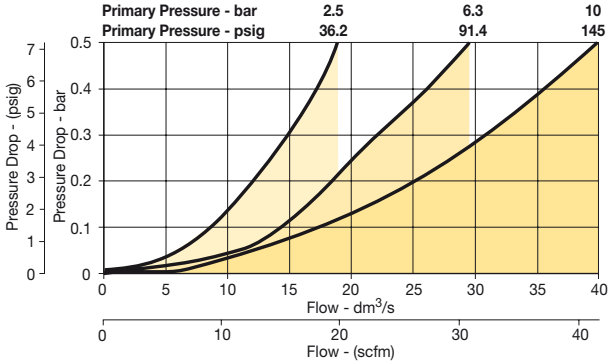

P32FB 3/8" Filter

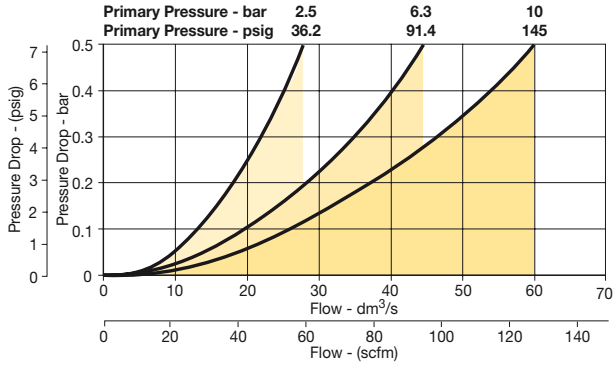

P32FB 1/2" Filter

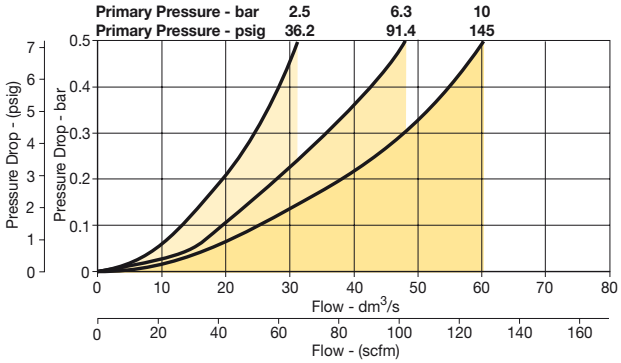

Repair and Service Kits

Plastic bowl / Bowl guard manual drain	**P32KB00BGM**
Metal bowl / Sight gauge manual drain	**P32KB00BSM**
Auto drain	**P32KA00DA**
5µ particle filter element	**P32KA00ESE**
L-bracket (fits to body)	**P32KA00ML**
T-bracket (fits to body connector)	**P32KA00MB**
T-bracket with body connector	**P32KA00MT**
Body connector	**P32KA00CB**

Parker Hannifin Corporation
Pneumatic Division
Richland, Michigan
www.parker.com/globalfrl

Standard Particulate Filter - P33

Symbols

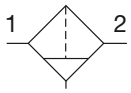

Manual drain

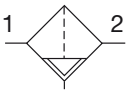

Auto drain

- Integral 1/2" or 3/4" ports (NPT, BSPP & BSPT)
- High efficiency 5 micron element as standard
- Excellent water removal efficiency
- Robust but lightweight aluminum construction
- Positive bayonet latch to ensure correct & safe fitting

Options:

P33FA 9 6 E G M N

Basic series

Global modular standard particulate filter	P33FA

Thread type

BSPP	**1**
BSPT	2
NPT	**9**

Port size

1/2	**4**
3/4	**6**

Element

5µ Element	**E**

Bowl type

G	**Poly bowl with bowl guard**
M	**Metal bowl without sight gauge**
S	**Metal bowl with sight gauge**

Drain type

M	**Manual drain**
A	**Auto drain**

Mounting

N	**No bracket**

Bold items are most common.

Port size	Description	Flow‡ dm^3/s (scfm)	Max. bar (psig)	Height mm (inches)	Width mm (inches)	Depth mm (inches)	Part number†
1/2"	Poly bowl - manual drain	40 (85)	10 (150)	213 (8.39)	73 (2.87)	73 (2.87)	**P33FA94EGMN**
1/2"	Poly bowl - auto drain	40 (85)	10 (150)	207 (8.15)	73 (2.87)	73 (2.87)	**P33FA94EGAN**
1/2"	Metal bowl - manual drain	40 (85)	17 (250)	213 (8.39)	73 (2.87)	73 (2.87)	**P33FA94ESMN**
1/2"	Metal bowl - auto drain	40 (85)	17 (250)	207 (8.15)	73 (2.87)	73 (2.87)	**P33FA94ESAN**
3/4"	Poly bowl - manual drain	48 (102)	10 (150)	213 (8.39)	73 (2.87)	73 (2.87)	**P33FA96EGMN**
3/4"	Poly bowl - auto drain	48 (102)	10 (150)	207 (8.15)	73 (2.87)	73 (2.87)	**P33FA96EGAN**
3/4"	Metal bowl - manual drain	48 (102)	17 (250)	213 (8.39)	73 (2.87)	73 (2.87)	**P33FA96ESMN**
3/4"	Metal bowl - auto drain	48 (102)	17 (250)	207 (8.15)	73 (2.87)	73 (2.87)	**P33FA96ESAN**

† **Standard part numbers shown in bold. For other models refer to Options chart above.**
‡ Flow with 6.3 bar (91.3 psig) inlet pressure and 0.34 (4.9 psig) pressure drop.

Parker Hannifin Corporation
Pneumatic Division
Richland, Michigan
www.parker.com/globalfrl

Specifications

Flow capacity*	1/2	40 dm^3/s (85 scfm)
	3/4	48 dm^3/s (102 scfm)
Operating temperature	Plastic bowl	-25°C to 52°C (-13°F to 125°F)
	Metal bowl	-25°C to 65.5°C (-13°F to 150°F)
Max. supply pressure	Plastic bowl	10 bar (150 psig)
	Metal bowl	17 bar (250 psig)
Standard filtration		5 micron
Useful retention†		85 cm^3 (2.8 US oz.)
Port size	BSPP / BSPT / NPT	1/2, 3/4
Weight		0.46 kg (1.01 lbs)

* Inlet pressure 6.3 bar (91.3 psig). Pressure drop 0.34 bar (4.9 psig).
† Useful retention refers to volume below the quiet zone baffle.

Air quality:
Within ISO 8573-1: 1991 Class 3 (Particulates)
Within ISO 8573-1: 2001 Class 6 (Particulates)

Material Specifications

Body		Aluminum
Body cap		ABS
Bowls	Plastic bowl	Polycarbonate
	Metal bowl	Aluminum
Bowl guard		Nylon
Deflector		Polypropylene
Element retainer / Baffle		Acetal
Filter element		Sintered polyethylene
Seals		Nitrile
Sight gauge	Metal bowl	Nylon

Dimensions mm (inches)

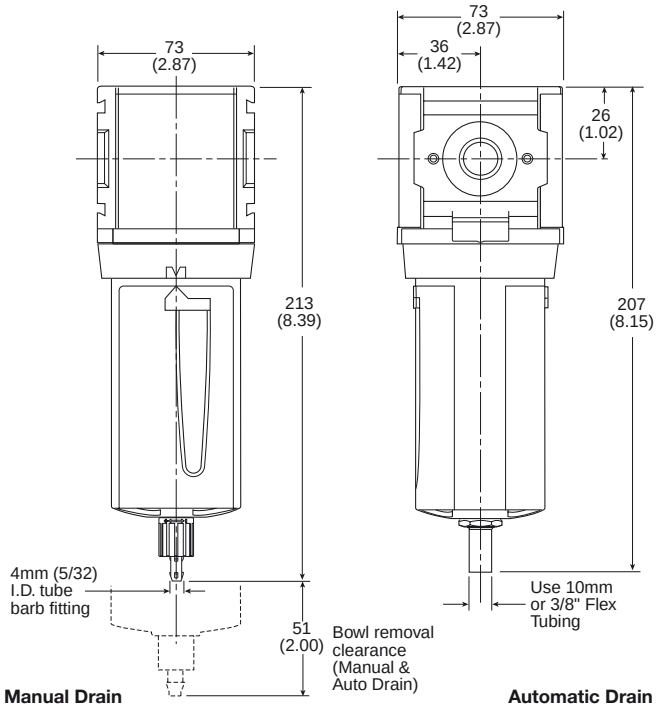

Flow Charts

1/2 Filter

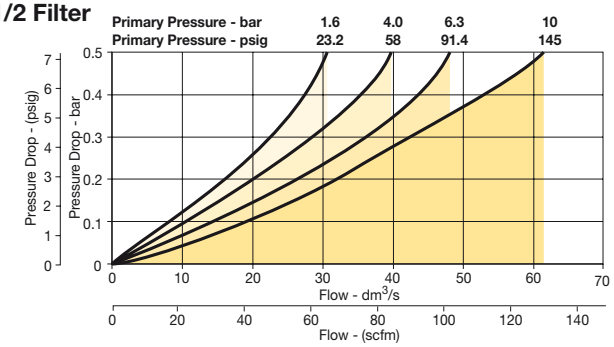

3/4 Filter

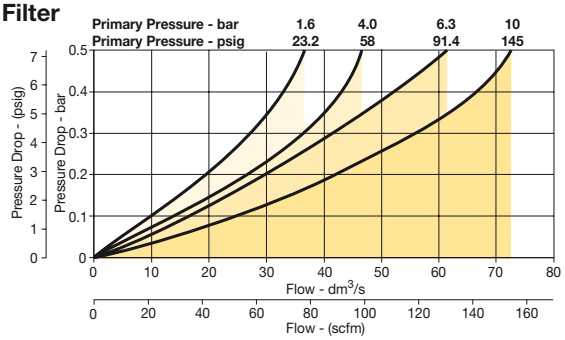

Repair and Service Kits

Plastic bowl / Bowl guard manual drain	**P33KA00BGM**
Metal bowl / Sight gauge manual drain	**P33KA00BSM**
Auto drain	**P32KA00DA**
5µ particle filter element	**P33KA00ESE**
L-bracket (fits to body)	**P33KA00ML**
T-bracket (fits to body connector)	**P32KA00MB**
T-bracket with body connector	**P33KA00MT**
Body connector	**P32KA00CB**

Parker Hannifin Corporation
Pneumatic Division
Richland, Michigan
www.parker.com/globalfrl

Mini Coalescing and Adsorber Filters - P31

Symbol

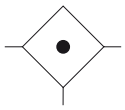

- Integral 1/4" ports (NPT, BSPP & BSPT)
- Removes liquid aerosols and sub micron particles
- Oil free air for critical applications, such as air gauging, pneumatic instrumentation and control
- Differential Pressure Indicator (DPI) standard on Coalescing Filters
- Positive bayonet latch to ensure correct and safe fitting
- Adsorbing activated carbon element removes oil vapors and most hydrocarbons

Note: To optimize the life of coalescing element, it is advisable to install a P31F pre-filter with a 5 micron element upstream of the coalescing filter.

To optimize the life of an Adsorber it is advisable to install a P31 Coalescing Filter upstream of the Adsorber. Adsorber element should be replaced approximately every 1000 hours of service.

Options:

P31FB 9 2 D G M N

Basic series	
Global modular mini coalescing filter	P31FB

Thread type	
BSPP	1
BSPT	2
NPT	9

Port size	
1/4	2

Element	
0.01µ Element	C
0.01µ Element with DPI	D
1µ Element	9
1µ Element with DPI	Q
Adsorber	A

Bowl type	
G	Poly bowl with bowl guard
M	Metal bowl without sight gauge

Drain type	
B	Pulse drain
M	Manual drain

Mounting	
N	No bracket

Bold items are most common.

Port size	Description	Flow‡ dm^3/s (scfm)	Max. bar (psig)	Height mm (inches)	Width mm (inches)	Depth mm (inches)	Part number†
1/4"	Poly bowl - 0.01 micron - manual drain	3.6 (7.5)	10 (150)	136.9 (5.39)	40 (1.58)	40 (1.58)	**P31FB92DGMN**
1/4'	Poly bowl - 0.01 micron - pulse drain	3.6 (7.5)	10 (150)	131.7 (5.19)	40 (1.58)	40 (1.58)	**P31FB92DGBN**
1/4"	Metal bowl - 0.01 micron - manual drain	3.6 (7.5)	10 (150)	136.9 (5.39)	40 (1.58)	40 (1.58)	**P31FB92DMMN**
1/4'	Metal bowl - 0.01 micron - pulse drain	3.6 (7.5)	10 (150)	131.7 (5.19)	40 (1.58)	40 (1.58)	**P31FB92DMBN**

† **Standard part numbers shown in bold. For other models refer to Options chart above.**
‡ Flow with 6.3 bar (91.3 psig) inlet pressure and 0.2 (3 psig) pressure drop.

Parker Hannifin Corporation
Pneumatic Division
Richland, Michigan
www.parker.com/globalfrl

Specifications

Flow capacity		
1.0 micron coalescing		5.5 dm^3/s (12 scfm)
0.01 micron coalescing		3.6 dm^3/s (7.5 scfm)
Activated carbon adsorber		6 dm^3/s (12.7 scfm)
Operating temperature	Plastic bowl	-10°C to 52°C (14°F to 125°F)
	Metal bowl	-10°C to 65.5°C (14°F to 150°F)
Max. supply pressure	Plastic bowl	10 bar (150 psig)
	Metal bowl	10 bar (150 psig)§
Standard filtration		1.0 and 0.01 micron
Adsorber	Max. oil carryover (ppm w/w) 0.003 @ 21°C (70°F)	
Useful retention†		12 cm^3 (0.4 US oz.)
Port size	BSPP / BSPT / NPT	1/4
Weight		0.11 kg (0.24 lbs)

Inlet pressure 6.3 bar (91.3 psig), Pressure drop 0.2 bar (3 psig), Saturated Element.

† Useful retention refers to volume below the quiet zone baffle.

§ Without pressure indicator (DPI) – max. pressure for metal bowl version is 17 bar (250 psig).

Material Specifications

Body		Aluminum
Body cap		ABS
Bowl	Plastic bowl	Polycarbonate
	Metal bowl	Aluminum
Filter element	1.0 and .01 micron	Borosilicate cloth
Adsorber		Activated carbon
Seals		Nitrile

Flow Charts

P31 - 1.0 micron flow

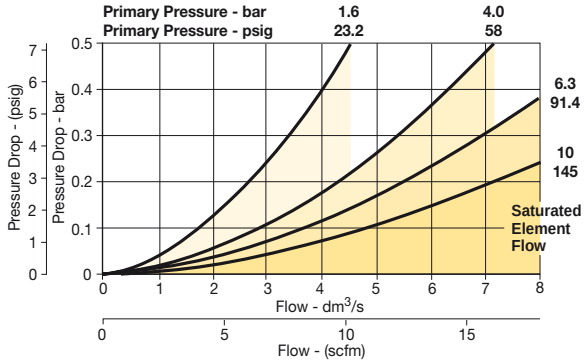

P31 - 0.01 micron flow

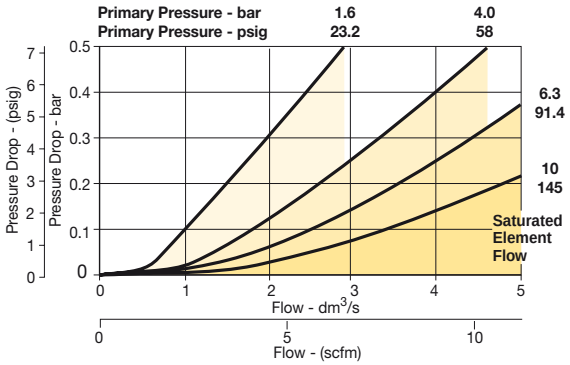

Dimensions mm (inches)

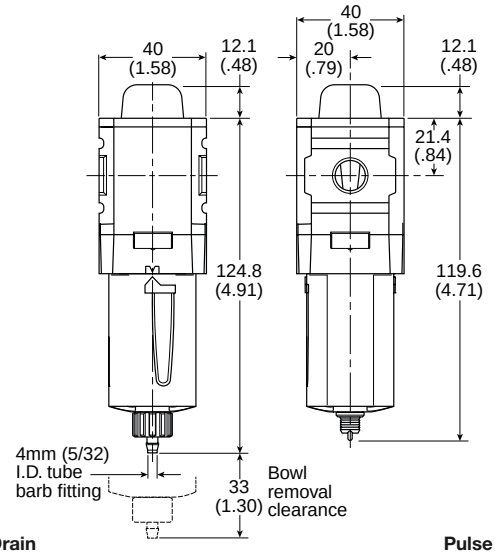

Manual Drain **Pulse Drain**

Repair and Service Kits

Plastic bowl / Bowl guard manual drain	**P31KB00BGM**
Metal bowl / w/o sight gauge manual drain	**P31KB00BMM**
Plastic bowl / Bowl guard pulse drain	**P31KB00BGB**
Metal bowl / w/o sight gauge pulse drain	**P31KB00BMB**
1µ coalescing filter element	**P31KA00ES9**
0.01µ coalescing filter element	**P31KA00ESC**
Activated carbon adsorber filter element	**P31KA00ESA**
C-bracket (fits to body)	**P31KA00MW**
T-bracket with body connector	**P31KA00MT**
Body connector	**P31KA00CB**
Differential pressure indicator (replacement)	**P31KB00RQ**

Parker Hannifin Corporation
Pneumatic Division
Richland, Michigan
www.parker.com/globalfrl

Compact Coalescing and Adsorber Filter - P32

Symbol

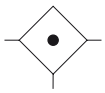

- Integral 1/4", 3/8" or 1/2" ports (NPT, BSPP & BSPT)
- Removes liquid aerosols and sub micron particles
- Oil free air for critical applications, such as air gauging, pneumatic instrumentation and control
- Differential Pressure Indicator (DPI) standard on Coalescing Filters
- Positive bayonet latch to ensure correct & safe fitting
- Adsorbing activated carbon element removes oil vapors and most hydrocarbons

Note: To optimize the life of coalescing element, it is advisable to install a P32F pre-filter with a 5 micron element upstream of the coalescing filter.

To optimize the life of an Adsorber it is advisable to install a P32 Coalescing Filter upstream of the Adsorber. Adsorber element should be replaced approximately every 1000 hours of service.

Options:

P32FB 9 2 D G M N

Basic series	
Global modular compact coalescing filter	P32FB

Thread type	
BSPP	1
BSPT	2
NPT	9

Port size	
1/4	2
3/8	3
1/2	4

Element	
0.01µ Element	C
0.01µ Element with DPI	D
1µ Element	9
1µ Element with DPI	Q
Adsorber	A

Bowl type	
G	Poly bowl with bowl guard
M	Metal bowl without sight gauge
S	Metal bowl with sight gauge

Drain type	
M	Manual drain
A	Auto drain

Mounting	
N	No bracket

Bold items are most common.

Port size	Description	Flow‡ dm^3/s (scfm)	Max. bar (psig)	Height mm (inches)	Width mm (inches)	Depth mm (inches)	Part number†
1/4"	Poly bowl - 0.01 micron, manual drain	17 (36)	10 (150)	212.3 (8.36)	60 (2.36)	60 (2.36)	**P32FB92DGMN**
1/4"	Poly bowl - 0.01 micron, auto drain	17 (36)	10 (150)	206.3 (8.12)	60 (2.36)	60 (2.36)	**P32FB92DGAN**
1/4"	Metal bowl - 0.01 micron, manual drain	17 (36)	17 (250)	212.3 (8.36)	60 (2.36)	60 (2.36)	**P32FB92DSMN**
1/4"	Metal bowl - 0.01 micron, auto drain	17 (36)	17 (250)	206.3 (8.12)	60 (2.36)	60 (2.36)	**P32FB92DSAN**
3/8"	Poly bowl - 0.01 micron, manual drain	17 (36)	10 (150)	212.3 (8.36)	60 (2.36)	60 (2.36)	**P32FB93DGMN**
3/8"	Poly bowl - 0.01 micron, auto drain	17 (36)	10 (150)	206.3 (8.12)	60 (2.36)	60 (2.36)	**P32FB93DGAN**
3/8"	Metal bowl - 0.01 micron, manual drain	17 (36)	17 (250)	212.3 (8.36)	60 (2.36)	60 (2.36)	**P32FB93DSMN**
3/8'	Metal bowl - 0.01 micron, auto drain	17 (36)	17 (250)	206.3 (8.12)	60 (2.36)	60 (2.36)	**P32FB93DSAN**
1/2"	Poly bowl - 0.01 micron, manual drain	17 (36)	10 (150)	212.3 (8.36)	60 (2.36)	60 (2.36)	**P32FB94DGMN**
1/2"	Poly bowl - 0.01 micron, auto drain	17 (36)	10 (150)	206.3 (8.12)	60 (2.36)	60 (2.36)	**P32FB94DGAN**
1/2"	Metal bowl - 0.01 micron, manual drain	17 (36)	17 (250)	212.3 (8.36)	60 (2.36)	60 (2.36)	**P32FB94DSMN**
1/2"	Metal bowl - 0.01 micron, auto drain	17 (36)	17 (250)	206.3 (8.12)	60 (2.36)	60 (2.36)	**P32FB94DSAN**

† **Standard part numbers shown in bold. For other models refer to Options chart above.**
‡ Flow with 6.3 bar (91.3 psig) inlet pressure and 0.2 (3 psig) pressure drop.

Parker Hannifin Corporation
Pneumatic Division
Richland, Michigan
www.parker.com/globalfrl

Specifications

Flow capacity		
1.0 micron coalescing		25 dm^3/s (53 scfm)
0.01 micron coalescing		17 dm^3/s (36 scfm)
Activated carbon adsorber		40 dm^3/s (85 scfm)
Operating temperature	Plastic bowl	-25°C to 52°C (-13°F to 125°F)
	Metal bowl	-25°C to 65.5°C (-13°F to 150°F)
Max. supply pressure	Plastic bowl	10 bar (150 psig)
	Metal bowl	17 bar (250 psig)
Standard filtration		1.0 and 0.01 micron
Adsorber	Max. oil carryover (ppm w/w)	0.003 @ 21°C (70°F)
Useful retention†		51 cm^3 (1.7 US oz.)
Port size	BSPP / BSPT / NPT	1/4, 3/8, 1/2
Weight		0.32 kg (0.71 lbs)

Inlet pressure 6.3 bar (91.3 psig), Pressure drop 0.2 bar (3 psig), Saturated Element.

† Useful retention refers to volume below the quiet zone baffle.

Flow Charts

P32 - 1.0 micron flow

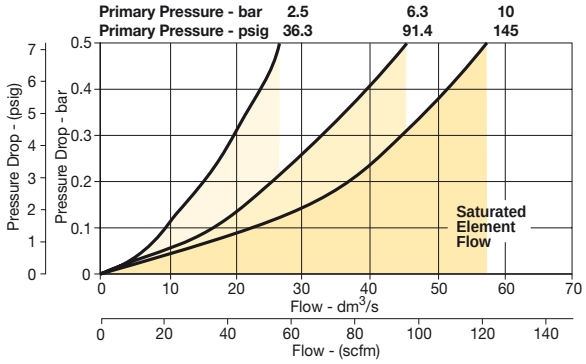

P32 - 0.01 micron flow

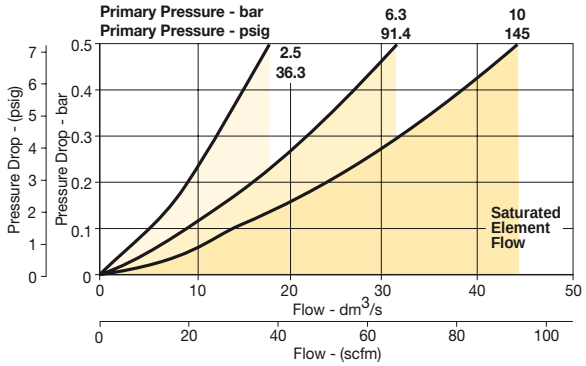

Dimensions mm (inches)

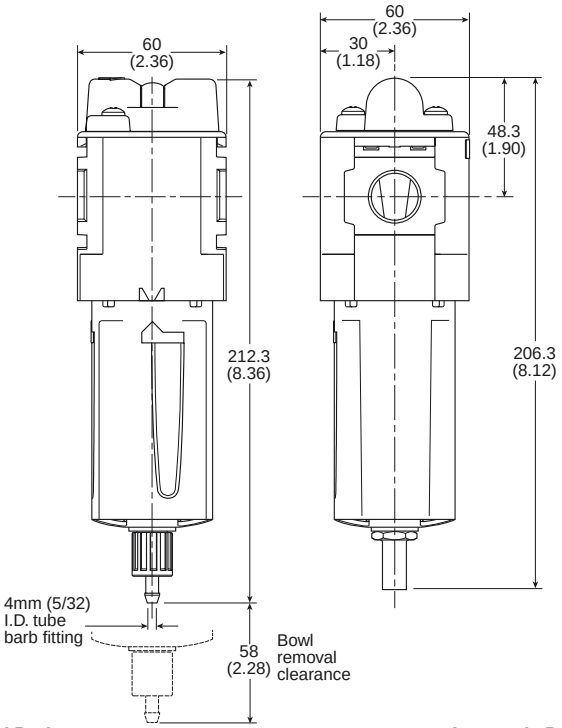

Manual Drain **Automatic Drain**

Material Specifications

Body		Aluminum
Body cap		ABS
Bowls	Plastic bowl	Polycarbonate
	Metal bowl	Aluminum
Filter element	1.0 and .01 micron	Borosilicate cloth
Adsorber		Activated carbon
Seals		Nitrile
Sight gauge	Metal bowl	Nylon

Repair and Service Kits

Plastic bowl / Bowl guard manual drain	**P32KB00BGM**
Metal bowl / Sight gauge manual drain	**P32KB00BSM**
Auto drain	**P32KA00DA**
1µ coalescing filter element	**P32KA00ES9**
0.01µ coalescing filter element	**P32KA00ESC**
Activated carbon adsorber filter element	**P32KA00ESA**
L-bracket (fits to body)	**P32KA00ML**
T-bracket (fits to body connector)	**P32KA00MB**
T-bracket with body connector	**P32KA00MT**
Body connector	**P32KA00CB**
Differential pressure indicator (replacement)	**P32KA00RQ**

Parker Hannifin Corporation
Pneumatic Division
Richland, Michigan
www.parker.com/globalfrl

Standard Coalescing and Adsorber Filter - P33

Symbol

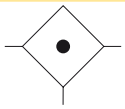

- Integral 1/2" or 3/4" ports (NPT, BSPP & BSPT)
- Removes liquid aerosols and sub micron particles
- Oil free air for critical applications, such as air gauging, pneumatic instrumentation and control
- Differential Pressure Indicator (DPI) standard on Coalescing Filters
- Positive bayonet latch to ensure correct & safe fitting
- Adsorbing activated carbon element removes oil vapors and most hydrocarbons

Note: To optimize the life of coalescing element, it is advisable to install a P33F pre-filter with a 5 micron element upstream of the coalescing filter.

To optimize the life of an Adsorber it is advisable to install a P33 Coalescing Filter upstream of the Adsorber. Adsorber element should be replaced approximately every 1000 hours of service.

Options:

P33FA 9 6 D G M N

Basic series	
Global modular standard coalescing filter	P33FA

Thread type	
BSPP	**1**
BSPT	2
NPT	**9**

Port size	
1/2	**4**
3/4	**6**

Element	
0.01µ Element	**C**
0.01µ Element with DPI	**D**
1µ Element	**9**
1µ Element with DPI	**Q**
Adsorber	**A**

Bowl type	
G	**Poly bowl with bowl guard**
M	**Metal bowl without sight gauge**
S	**Metal bowl with sight gauge**

Drain type	
M	**Manual drain**
A	**Auto drain**

Mounting	
N	**No bracket**

Bold items are most common.

Port size	Description	Flow‡ dm^3/s (scfm)	Max. bar (psig)	Height mm (inches)	Width mm (inches)	Depth mm (inches)	Part number†
1/2"	Poly bowl - 0.01 micron, manual drain	32 (68)	10 (150)	235 (9.25)	73 (2.87)	73 (2.87)	**P33FA94DGMN**
1/2"	Poly bowl - 0.01 micron, auto drain	32 (68)	10 (150)	229 (9.02)	73 (2.87)	73 (2.87)	**P33FA94DGAN**
1/2"	Metal bowl - 0.01 micron, manual drain	32 (68)	17 (250)	235 (9.25)	73 (2.87)	73 (2.87)	**P33FA94DSMN**
1/2"	Metal bowl - 0.01 micron, auto drain	32 (68)	17 (250)	229 (9.02)	73 (2.87)	73 (2.87)	**P33FA94DSAN**
3/4"	Poly bowl - 0.01 micron, manual drain	32 (68)	10 (150)	235 (9.25)	73 (2.87)	73 (2.87)	**P33FA96DGMN**
3/4"	Poly bowl - 0.01 micron, auto drain	32 (68)	10 (150)	229 (9.02)	73 (2.87)	73 (2.87)	**P33FA96DGAN**
3/4"	Metal bowl - 0.01 micron, manual drain	32 (68)	17 (250)	235 (9.25)	73 (2.87)	73 (2.87)	**P33FA96DSMN**
3/4"	Metal bowl - 0.01 micron, auto drain	32 (68)	17 (250)	229 (9.02)	73 (2.87)	73 (2.87)	**P33FA96DSAN**

† **Standard part numbers shown in bold. For other models refer to Options chart above.**
‡ Flow with 6.3 bar (91.3 psig) inlet pressure and 0.2 (3 psig) pressure drop.

Parker Hannifin Corporation
Pneumatic Division
Richland, Michigan
www.parker.com/globalfrl

Specifications

Flow capacity		
1.0 micron coalescing		32 dm^3/s (68 scfm)
0.01 micron coalescing		20 dm^3/s (42 scfm)
Activated carbon adsorber		34 dm^3/s (72 scfm)
Operating temperature	Plastic bowl	-25°C to 52°C (-13°F to 125°F)
	Metal bowl	-25°C to 65.5°C (-13°F to 150°F)
Max. supply pressure	Plastic bowl	10 bar (150 psig)
	Metal bowl	17 bar (250 psig)
Standard filtration		1.0 and 0.01 micron
Adsorber	Max. oil carryover (ppm w/w)	0.003 @ 21°C (70°F)
Useful retention†		85 cm^3 (2.8 US oz.)
Port size	BSPP / BSPT / NPT	1/2, 3/4
Weight		0.50 kg (1.10 lbs)

Inlet pressure 6.3 bar (91.3 psig), Pressure drop 0.2 bar (3 psig), Saturated Element.

† Useful retention refers to volume below the quiet zone baffle.

Flow Charts

P33 - 1.0 micron flow

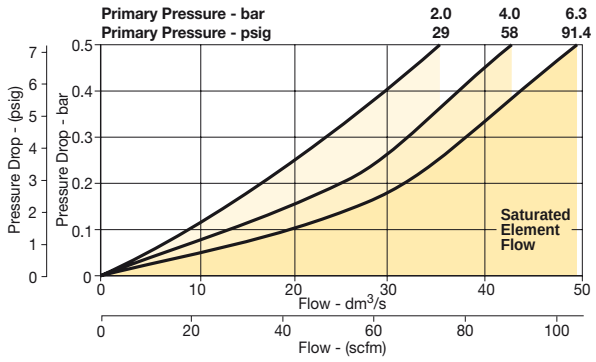

P33 - 0.01 micron flow

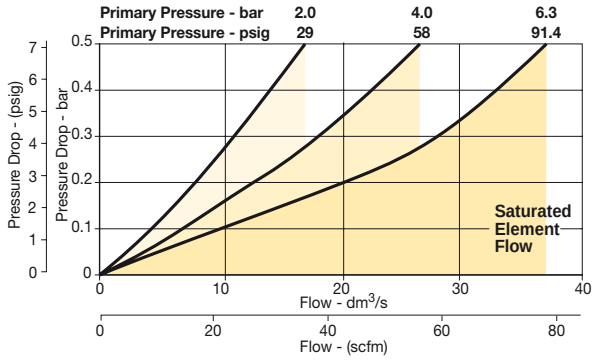

Dimensions mm (inches)

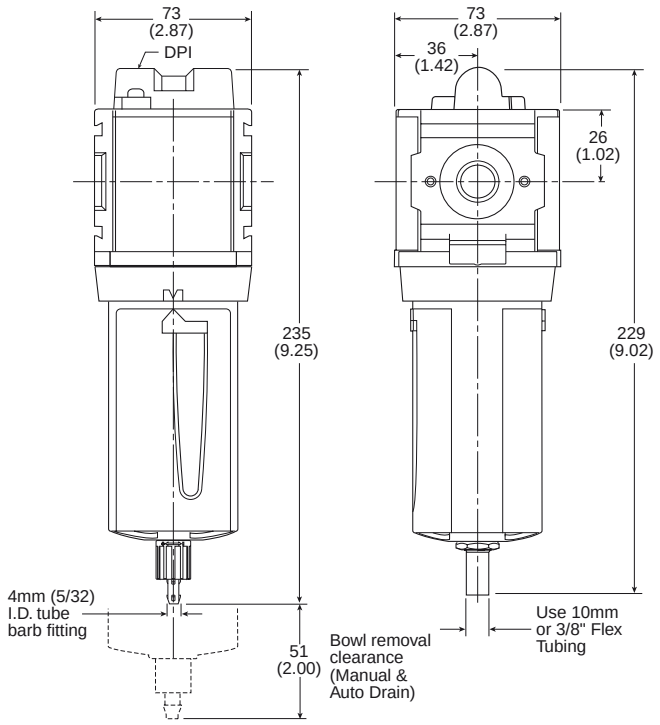

Manual Drain **Automatic Drain**

Material Specifications

Body		Aluminum
Body cap		ABS
Bowls	Plastic bowl	Polycarbonate
	Metal bowl	Aluminum
Filter element	1.0 and .01 micron	Borosilicate cloth
Adsorber		Activated carbon
Seals		Nitrile
Sight gauge	Metal bowl	Nylon

Repair and Service Kits

Plastic bowl / Bowl guard manual drain	**P33KA00BGM**
Metal bowl / Sight gauge manual drain	**P33KA00BSM**
Auto drain	**P32KA00DA**
1µ coalescing filter element	**P33KA00ES9**
0.01µ coalescing filter element	**P33KA00ESC**
Activated carbon adsorber filter element	**P33KA00ESA**
L-bracket (fits to body)	**P33KA00ML**
T-bracket (fits to body connector)	**P32KA00MB**
T-bracket with body connector	**P32KA00MT**
Body connector	**P32KA00CB**
Differential pressure indicator (replacement)	**P32KA00RQ**

Parker Hannifin Corporation
Pneumatic Division
Richland, Michigan
www.parker.com/globalfrl

Mini Regulator - P31

Symbols

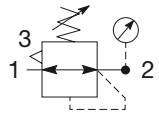

Self relieving regulator with gauge

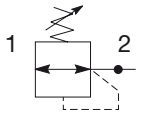

Non-relieving regulator

- Integral 1/4" ports (NPT, BSPP & BSPT)
- Robust but lightweight aluminum construction
- Secondary pressure ranges 0-2 bar (0-30 psig), 0-4 bar, (0-60 psig), 0-8 bar (0-125 psig), 0-16 bar (0-232 psig)
- Secondary aspiration plus balanced poppet provides quick response and accurate pressure regulation.
- Relieving & Non-relieving types
- Non-rising knob

Options:

P31RB 9 2 B N N P

Basic series	
Global modular mini regulator	P31RB

Thread type	
BSPP	**1**
BSPT	2
NPT	**9**

Port size	
1/4	**2**

Relief	
Relieving	**B**
Non-relieving	**N**
Reverse flow-relieving	**R**

Adjustment	
N	**Non-rising knob**

Mounting	
P	**Plastic panel mount nut**

Adjustment range		
With square gauge		**With round gauge**
psig	**bar**	
1 = 30*	**V = 2***	**Z** 2 bar; 30 psig; 0.2 MPa
3 = 60	**S = 4**	**M** 4 bar; 60 psig; 0.4 MPa
5 = 125	**T = 8**	**G** 8 bar; 125 psig; 0.8 MPa
		J 16 bar; 232 psig; 1.6 MPa
		Without gauge
		Y 2 bar; 30 psig; 0.2 MPa
		L 4 bar; 60 psig; 0.4 MPa
		N 8 bar; 125 psig; 0.8 MPa
		H 16 bar; 232 psig; 1.6 MPa

* Unit comes with 0-4 bar or 0-60 psig gauge respectively.

Bold items are most common.

Port size	Description	Flow‡ dm^3/s (scfm)	Max. bar (psig)	Height mm (inches)	Width mm (inches)	Depth mm (inches)	Part number†
1/4"	8 bar (125 psig) relieving	32 (68)	20 (300)	104.1 (4.1)	40 (1.58)	40 (1.58)	**P31RB92BNNP**
1/4"	8 bar (125 psig) + gauge	32 (68)	20 (300)	104.1 (4.1)	40 (1.58)	61.3 (2.41)	**P31RB92BN5P**

† **Standard part numbers shown in bold. For other models refer to Options chart above.**
‡ Flow with 10 bar (145 psig) inlet pressure, 6.3 bar (91.3) psig) set pressure and 1 bar (14.5 psig) pressure drop.

Parker Hannifin Corporation
Pneumatic Division
Richland, Michigan
www.parker.com/globalfrl

Specifications

Flow capacity*	1/4	32 dm^3/s (68 scfm)
Operating temperature†		-20°C to 65.5°C (-4°F to 150°F)
Max. supply pressure		20 bar (300 psig)
Adjusting range pressure		0-2 bar (30 psig) 0-4 bar (60 psig) 0-8 bar (125 psig) 0-16 bar (232 psig)
Port size	BSPP / BSPT / NPT	1/4
Gauge port (2 ea.)**	BSPP / BSPT / NPT	1/8
Weight		0.17 kg (0.37 lbs)

* Inlet pressure 10 bar (145 psig). Secondary pressure 6.3 bar (91.3 psig).

** Non-gauge option only.

† Units with square gauges: -15°C to 65.5°C (5°F to 150°F)

Flow Charts

1/4 Regulator

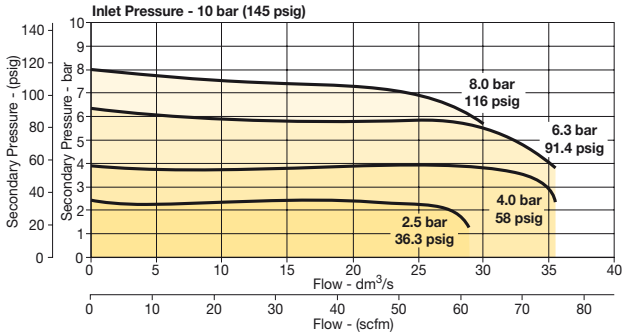

Material Specifications

Body	Aluminum
Adjustment knob	Acetal
Bonnet	PBT
Diaphragm assembly	Brass / Nitrile
Valve assembly	Brass / Nitrile
Springs	Steel
Seals	Nitrile
Panel nut	Acetal

Repair and Service Kits

Regulator repair kit - relieving	**P31KB00RB**
Regulator repair kit - non-relieving	**P31KB00RC**
Panel mount nut - aluminum	**P31KA00MM**
Panel mount nut - plastic	**P31KA00MP**
Angle bracket (attaches via panel nut)	**P31KB00MR**
C-bracket (fits to body)	**P31KA00MW**
T-bracket with body connector	**P31KA00MT**
Body connector	**P31KA00CB**

Dimensions mm (inches)

NOTE: 30 mm (1.20 in.) hole required for panel nut mounting.

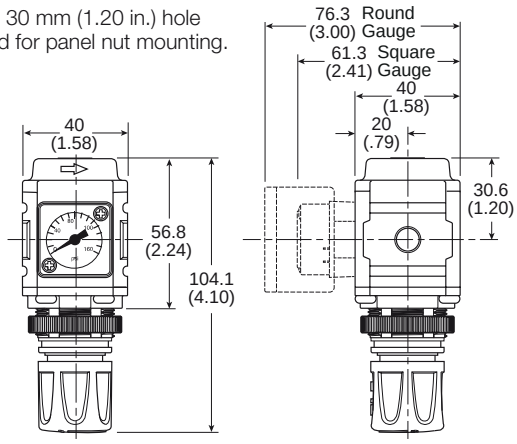

⚠ WARNING

Product rupture can cause serious injury.
Do not connect regulator to bottled gas.
Do not exceed Maximum primary pressure rating.

CAUTION:

REGULATOR PRESSURE ADJUSTMENT – The working range of knob adjustment is designed to permit outlet pressures within their full range. Pressure adjustment beyond this range is also possible because the knob is not a limiting device. This is a common characteristic of most industrial regulators, and limiting devices may be obtained only by special design. For best performance, regulated pressure should always be set by increasing the pressure up to the desired setting.

Gauges

Square flush mount gauge

0-4 bar	**K4511SCR04B**
0-11 bar	**K4511SCR11B**
0-60 psig	**K4511SCR060**
0-160 psig	**K4511SCR160**

Square with adapter kit

0-4 bar	**P6G-PR10040**
0-11 bar	**P6G-PR10110**
0-60 psig	**P6G-PR90060**
0-160 psig	**P6G-PR90160**

1.00" Round 1/8" center back mount

0-60 psig / 0-4 bar	**K4510N18060**
0-160 psig / 0-11 bar	**K4510N18160**

40mm Round 1/8" center back mount

(Not for use with Common Port Regulators)

0-30 psig / 0-2 bar	**K4515N18030**
0-60 psig / 0-4 bar	**K4515N18060**
0-160 psig / 0-11 bar	**K4515N18160**

For best performance, regulated pressure should always be set by increasing the pressure up to the desired setting.

Parker Hannifin Corporation
Pneumatic Division
Richland, Michigan
www.parker.com/globalfrl

Mini Common - P1 Regulator - P31

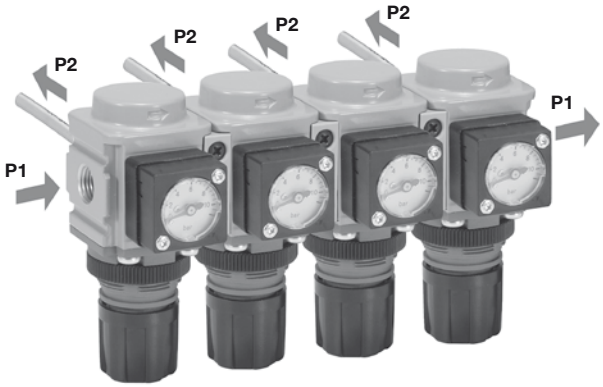

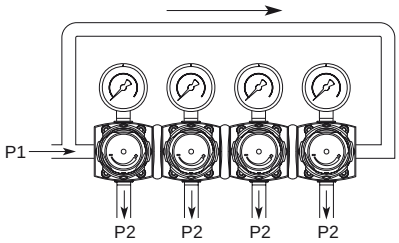

Symbols

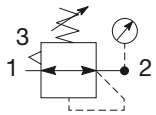

Self relieving regulator with gauge

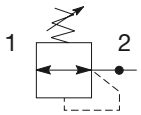

Non-relieving regulator

- Manifold style regulator with line pressure on both sides
- Pressure output is at front or rear
- Inlet port 1/4" (NPT, BSPP & BSPT)
- Working port 1/8"
- Robust construction
- Secondary pressure ranges 0-2 bar (0-30 psig), 0-4 bar, (0-60 psig), 0-8 bar (0-125 psig), 0-16 bar (0-232 psig)
- Secondary aspiration plus balanced poppet provides quick response and accurate pressure regulation
- Relieving & Non-relieving types
- Non-rising knob

Options:

P31HB 9 2 B N N P

Basic series

Global modular mini common regulator	P31HB

Thread type

BSPP	**1**
BSPT	2
NPT	**9**

Port size †

1/4	**2**

† Working port 1/8".

Relief

Relieving	**B**
Non-relieving	**N**
Reverse flow-relieving	**R**

Adjustment

N	**Non-rising knob**

Mounting

P	**Plastic panel mount nut**

Adjustment range

With square gauge		With round gauge	
psig	bar		
1 = 30*	V = 2*	Z	2 bar; 30 psig; 0.2 MPa
3 = 60	S = 4	M	4 bar; 60 psig; 0.4 MPa
5 = 125	T = 8	G	8 bar; 125 psig; 0.8 MPa
		J	16 bar; 232 psig; 1.6 MPa
		Without gauge	
		Y	2 bar; 30 psig; 0.2 MPa
		L	4 bar; 60 psig; 0.4 MPa
		N	8 bar; 125 psig; 0.8 MPa
		H	16 bar; 232 psig; 1.6 MPa

* Unit comes with 0-4 bar or 0-60 psig gauge respectively.

Bold items are most common.

Port size	Description	Flow‡ dm^3/s (scfm)	Max. bar (psig)	Height mm (inches)	Width mm (inches)	Depth mm (inches)	Part number†
1/4"	8 bar (125 psig) relieving	20 (42)	20 (300)	104.1 (4.1)	40 (1.58)	40 (1.58)	**P31HB92BNNP**

† **Standard part numbers shown in bold. For other models refer to Options chart above.**
‡ Flow with 10 bar (145 psig) inlet pressure, 6.3 bar (91.3) psig) set pressure and 1 bar (14.5 psig) pressure drop.

Parker Hannifin Corporation
Pneumatic Division
Richland, Michigan
www.parker.com/globalfrl

Specifications

Flow capacity*	1/4	20 dm³/s (42 scfm)
Operating temperature		-20°C to 65.5°C (-4°F to 150°F)
Max. supply pressure		20 bar (300 psig)
Adjusting range pressure		0-2 bar (30 psig) 0-4 bar (60 psig) 0-8 bar (125 psig) 0-16 bar (232 psig)
P1 Port size (Inlet / Outlet)	BSPP / BSPT / NPT	1/4
P2 Regulated ports (2 ea.)	BSPP / BSPT / NPT	1/8
Weight		0.30 kg (0.66 lbs)

* Inlet pressure 10 bar (145 psig). Secondary pressure 6.3 bar (91.3 psig).

Materials of Construction

Body	Aluminum
Adjustment knob	Acetal
Bonnet	33% Glass-filled PBT
Diaphragm assembly	Brass / Nitrile
Valve assembly	Brass / Nitrile

Flow Charts

1/4 Common Regulator

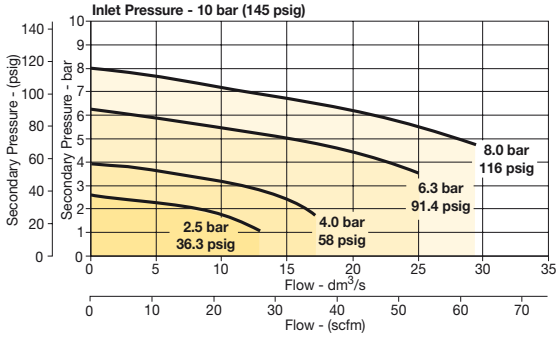

Dimensions mm (inches)

NOTE: 30 mm (1.20 in.) hole required for panel nut mounting.

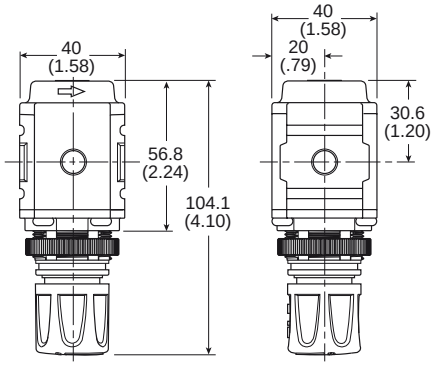

⚠ WARNING

Product rupture can cause serious injury.
Do not connect regulator to bottled gas.
Do not exceed Maximum primary pressure rating.

CAUTION:

REGULATOR PRESSURE ADJUSTMENT – The working range of knob adjustment is designed to permit outlet pressures within their full range. Pressure adjustment beyond this range is also possible because the knob is not a limiting device. This is a common characteristic of most industrial regulators, and limiting devices may be obtained only by special design. For best performance, regulated pressure should always be set by increasing the pressure up to the desired setting.

Repair and Service Kits

Regulator repair kit - relieving	**P31KB00RB**
Regulator repair kit - non-relieving	**P31KB00RC**
Panel mount nut - aluminum	**P31KA00MM**
Panel mount nut - plastic	**P31KA00MP**
Angle bracket (attaches via panel nut)	**P31KB00MR**
T-bracket with body connector	**P31KA00MT**
Body connector	**P31KA00CB**

Gauges

1.00" Round 1/8" center back mount	
0-60 psig / 0-4 bar	**K4510N18060**
0-160 psig / 0-11 bar	**K4510N18160**
Square with adapter kit	
0-4 bar	**P6G-PR10040**
0-11 bar	**P6G-PR10110**
0-60 psig	**P6G-PR90060**
0-160 psig	**P6G-PR90160**

For best performance, regulated pressure should always be set by increasing the pressure up to the desired setting.

Parker Hannifin Corporation
Pneumatic Division
Richland, Michigan
www.parker.com/globalfrl

Compact Regulator – P32

Symbols

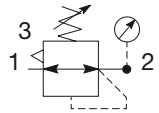

Self relieving regulator with gauge

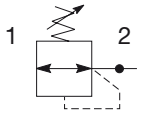

Non-relieving regulator

- Integral 1/4", 3/8" or 1/2" ports (NPT, BSPP & BSPT)
- Robust but lightweight aluminum construction
- Secondary pressure ranges 0-2 bar (0-30 psig), 0-4 bar, (0-60 psig), 0-8 bar (0-125 psig), 0-17 bar (0-250 psig)
- Secondary aspiration plus balanced poppet provides quick response and accurate pressure regulation
- Relieving & Non-relieving types
- Non-rising knob

Options:

P32RB 9 2 B N N P

Basic series	
Global modular compact regulator	P32RB

Thread type	
BSPP	1
BSPT	2
NPT	9

Port size	
1/4	2
3/8	3
1/2	4

Relief	
Relieving	B
Non-relieving	N

Note: Regulators will reverse flow as standard.

Adjustment	
N	Non-rising knob
T	T-Handle

Mounting	
P	Plastic panel mount nut

Adjustment range			
With square gauge			With round gauge
psig	bar		
1 = 30*	V = 2*	Z	2 bar; 30 psig; 0.2 MPa
3 = 60	S = 4	M	4 bar; 60 psig; 0.4 MPa
5 = 125	T = 8	G	8 bar; 125 psig; 0.8 MPa
		J	17 bar; 250 psig; 1.7 MPa
			Without gauge
		Y	2 bar; 30 psig; 0.2 MPa
		L	4 bar; 60 psig; 0.4 MPa
		N	8 bar; 125 psig; 0.8 MPa
		H	17 bar; 250 psig; 1.7 MPa

* Unit comes with 0-4 bar or 0-60 psig gauge respectively.

Bold items are most common.

Port size	Description	Flow‡ dm^3/s (scfm)	Max. bar (psig)	Height mm (inches)	Width mm (inches)	Depth mm (inches)	Part number†
1/4"	8 bar (125 psig) relieving	70 (148)	20 (300)	136 (5.4)	60 (2.36)	60 (2.36)	**P32RB92BNNP**
1/4"	8 bar (125 psig) relieving + gauge	70 (148)	20 (300)	136 (5.4)	60 (2.36)	93 (3.66)	**P32RB92BNGP**
3/8"	8 bar (125 psig) relieving	78 (165)	20 (300)	136 (5.4)	60 (2.36)	60 (2.36)	**P32RB93BNNP**
3/8"	8 bar (125 psig) relieving + gauge	78 (165)	20 (300)	136 (5.4)	60 (2.36)	93 (3.66)	**P32RB93BNGP**
1/2"	8 bar (125 psig) relieving	78 (165)	20 (300)	136 (5.4)	60 (2.36)	60 (2.36)	**P32RB94BNNP**
1/2"	8 bar (125 psig) relieving + gauge	78 (165)	20 (300)	136 (5.4)	60 (2.36)	93 (3.66)	**P32RB94BNGP**

† **Standard part numbers shown in bold. For other models refer to Options chart above.**
‡ Flow with 10 bar (145 psig) inlet pressure, 6.3 bar (91.3) psig) set pressure and 1 bar (14.5 psig) pressure drop.

CAUTION:

REGULATOR PRESSURE ADJUSTMENT – The working range of knob adjustment is designed to permit outlet pressures within their full range. Pressure adjustment beyond this range is also possible because the knob is not a limiting device. This is a common characteristic of most industrial regulators, and limiting devices may be obtained only by special design. For best performance, regulated pressure should always be set by increasing the pressure up to the desired setting.

⚠ WARNING

Product rupture can cause serious injury.
Do not connect regulator to bottled gas.
Do not exceed Maximum primary pressure rating.

Parker Hannifin Corporation
Pneumatic Division
Richland, Michigan
www.parker.com/globalfrl

Specifications

Flow capacity*	1/4	70 dm³/s (148 scfm)
	3/8	78 dm³/s (165 scfm)
	1/2	78 dm³/s (165 scfm)
Operating temperature		-25°C to 65.5°C (-13°F to 150°F)
Max. supply pressure		20 bar (300 psig)
Adjusting range pressure		0-2 bar (30 psig) 0-4 bar (60 psig) 0-8 bar (125 psig) 0-17 bar (250 psig)
Port size	BSPP / BSPT / NPT	1/4, 3/8, 1/2
Gauge port (2 ea.)	BSPP / BSPT / NPT	1/4
Weight		0.41 kg (0.90 lbs)

* Inlet pressure 10 bar (145 psig). Secondary pressure 6.3 bar (91.3 psig).

Material Specifications

Body		Aluminum
Adjustment knob		Acetal
Bonnet		33% Glass-filled nylon
Diaphragm assembly		Nitrile / Zinc
Valve assembly		Brass / Nitrile
Springs	Main regulating valve	Steel S.S.
Seals		Nitrile
Panel nut		Acetal

Dimensions mm (inches)

NOTE: 48 mm (1.90 in.) hole required for panel nut mounting.

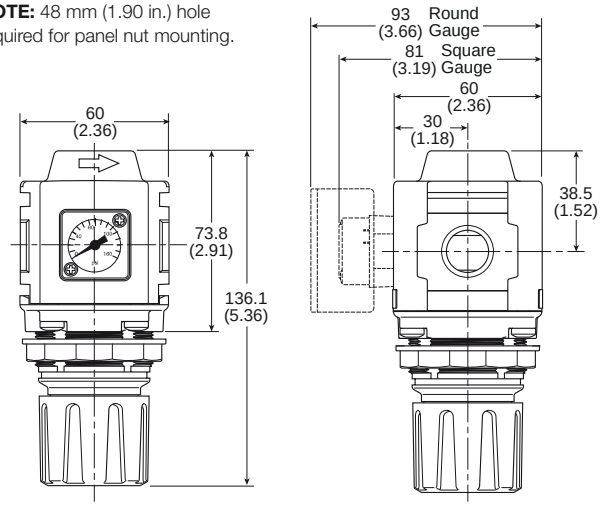

Repair and Service Kits

Regulator repair kit - relieving	**P32KB00RB**
Regulator repair kit - non-relieving	**P32KB00RC**
Panel mount nut - aluminum	**P32KA00MM**
Panel mount nut - plastic	**P32KA00MP**
Angle bracket (attaches via panel nut)	**P32KB00MR**
T-bracket with body connector	**P32KA00MT**
T-bracket	**P32KA00MB**
Body connector	**P32KA00CB**

Flow Charts

1/4 Regulator

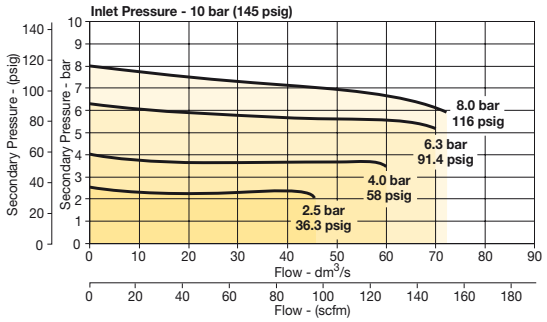

3/8 Regulator

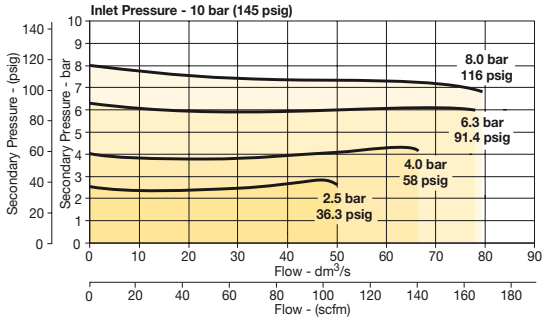

1/2 Regulator

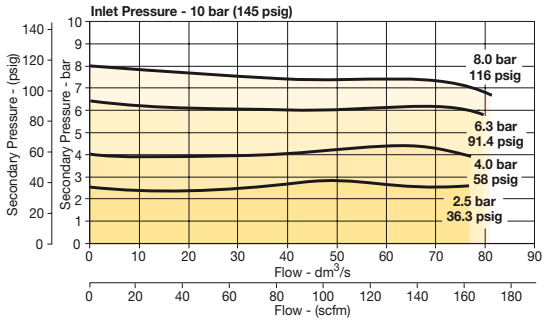

Gauges

50mm (2") Round 1/4" center back mount	
0-30 psig / 0-2 bar	**K4520N14030**
0-60 psig / 0-4 bar	**K4520N14060**
0-160 psig / 0-11 bar	**K4520N14160**
0-300 psig / 0-20 bar	**K4520N14300**
Square flush mount gauge	
0-4 bar	**K4511SCR04B**
0-11 bar	**K4511SCR11B**
0-60 psig	**K4511SCR060**
0-160 psig	**K4511SCR160**
Square with adapter kit	
0-4 bar	**P6G-PR10040**
0-11 bar	**P6G-PR10110**
0-60 psig	**P6G-PR90060**
0-160 psig	**P6G-PR90160**

For best performance, regulated pressure should always be set by increasing the pressure up to the desired setting.

Parker Hannifin Corporation
Pneumatic Division
Richland, Michigan
www.parker.com/globalfrl

Compact Semi-Precision Regulator – P32

Symbols

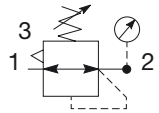

Self relieving regulator with gauge

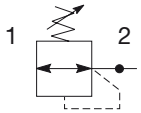

Non-relieving regulator

- Integral 1/4", 3/8" or 1/2" ports (NPT, BSPP & BSPT)
- Robust but lightweight aluminum construction
- Secondary pressure ranges 0-2 bar (0-30 psig), 0-4 bar, (0-60 psig), 0-8 bar (0-125 psig), 0-17 bar (0-250 psig)
- Secondary aspiration plus balanced poppet provides quick response and accurate pressure regulation
- Relieving & Non-relieving types
- Non-rising knob

Options:

P32RB 9 6 P N N P

Basic series	
Global modular compact regulator	P32RB

Thread type	
BSPP	1
BSPT	2
NPT	9

Port size	
1/4	2
3/8	3
1/2	4

Relief	
Semi-Precision Relieving	P
Semi-Presicison Non-relieving	T

Note: Regulators will reverse flow as standard.

Adjustment	
N	Non-rising knob
T	T-Handle

Mounting	
P	Plastic panel mount nut

Adjustment range			
With square gauge			With round gauge
psig	bar		
1 = 30*	V = 2*	Z	2 bar; 30 psig; 0.2 MPa
3 = 60	S = 4	M	4 bar; 60 psig; 0.4 MPa
5 = 125	T = 8	G	8 bar; 125 psig; 0.8 MPa
		J	17 bar; 250 psig; 1.7 MPa
			Without gauge
		Y	2 bar; 30 psig; 0.2 MPa
		L	4 bar; 60 psig; 0.4 MPa
		N	8 bar; 125 psig; 0.8 MPa
		H	17 bar; 250 psig; 1.7 MPa

* Unit comes with 0-4 bar or 0-60 psig gauge respectively.

Bold items are most common.

Port size	Description	Flow‡ dm^3/s (scfm)	Max. bar (psig)	Height mm (inches)	Width mm (inches)	Depth mm (inches)	Part number†
1/4"	8 bar (125 psig) relieving	25 (53)	20 (300)	136 (5.4)	60 (2.36)	60 (2.36)	**P32RB92PNNP**
1/4"	8 bar (125 psig) relieving + gauge	25 (53)	20 (300)	136 (5.4)	60 (2.36)	93 (3.66)	**P32RB92PNGP**
3/8"	8 bar (125 psig) relieving	25 (53)	20 (300)	136 (5.4)	60 (2.36)	60 (2.36)	**P32RB93PNNP**
3/8"	8 bar (125 psig) relieving + gauge	25 (53)	20 (300)	136 (5.4)	60 (2.36)	93 (3.66)	**P32RB93PNGP**
1/2"	8 bar (125 psig) relieving	25 (53)	20 (300)	136 (5.4)	60 (2.36)	60 (2.36)	**P32RB94PNNP**
1/2"	8 bar (125 psig) relieving + gauge	25 (53)	20 (300)	136 (5.4)	60 (2.36)	93 (3.66)	**P32RB94PNGP**

† **Standard part numbers shown in bold. For other models refer to Options chart above.**
‡ Flow with 10 bar (145 psig) inlet pressure, 6.3 bar (91.3) psig) set pressure and 1 bar (14.5 psig) pressure drop.

CAUTION:

REGULATOR PRESSURE ADJUSTMENT – The working range of knob adjustment is designed to permit outlet pressures within their full range. Pressure adjustment beyond this range is also possible because the knob is not a limiting device. This is a common characteristic of most industrial regulators, and limiting devices may be obtained only by special design. For best performance, regulated pressure should always be set by increasing the pressure up to the desired setting.

⚠ WARNING

Product rupture can cause serious injury.
Do not connect regulator to bottled gas.
Do not exceed Maximum primary pressure rating.

Parker Hannifin Corporation
Pneumatic Division
Richland, Michigan
www.parker.com/globalfrl

Specifications

Flow capacity*	1/4	25 dm^3/s (53 scfm)
	3/8	25 dm^3/s (53 scfm)
	1/2	25 dm^3/s (53 scfm)
Effect of supply pressure variation		0.04 bar (0.6 PSIG) for 1.7 bar (25 PSIG) change in P1
Operating temperature		-25°C to 65.5°C (-13°F to 150°F)
Max. supply pressure		20 bar (300 psig)
Adjusting range pressure		0-2 bar (30 psig) 0-4 bar (60 psig) 0-8 bar (125 psig) 0-17 bar (250 psig)
Port size	BSPP / BSPT / NPT	1/4, 3/8, 1/2
Gauge port (2 ea.)	BSPP / BSPT / NPT	1/4
Weight		0.41 kg (0.90 lbs)

* Inlet pressure 10 bar (145 psig). Secondary pressure 6.3 bar (91.3 psig).

Material Specifications

Body		Aluminum
Adjustment knob		Acetal
Bonnet		33% Glass-filled nylon
Diaphragm assembly		Nitrile / Zinc
Valve assembly		Brass / Nitrile
Springs	Main regulating valve	Steel S.S.
Seals		Nitrile
Panel nut		Acetal

Dimensions mm (inches)

NOTE: 48 mm (1.90 in.) hole required for panel nut mounting.

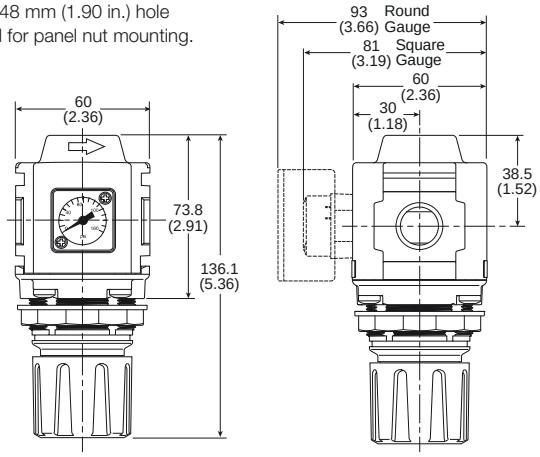

Repair and Service Kits

Regulator repair kit - relieving	**P32KB00RB**
Regulator repair kit - non-relieving	**P32KB00RC**
Panel mount nut - aluminum	**P32KA00MM**
Panel mount nut - plastic	**P32KA00MP**
Angle bracket (attaches via panel nut)	**P32KB00MR**
T-bracket with body connector	**P32KA00MT**
T-bracket	**P32KA00MB**
Body connector	**P32KA00CB**

Flow Charts

1/4 Regulator

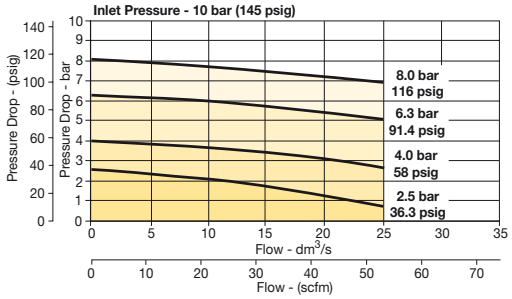

3/8 Regulator

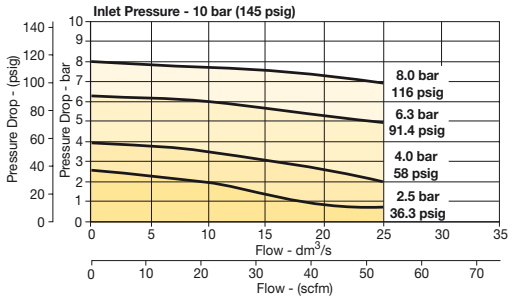

1/2 Regulator

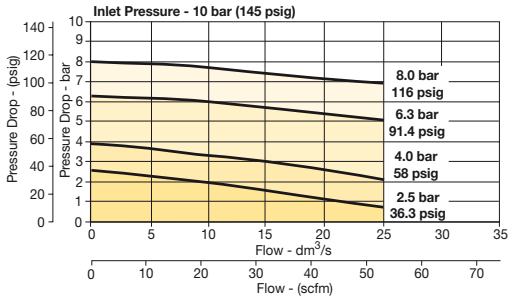

Gauges

50mm (2") Round 1/4" center back mount	
0-30 psig / 0-2 bar	**K4520N14030**
0-60 psig / 0-4 bar	**K4520N14060**
0-160 psig / 0-11 bar	**K4520N14160**
0-300 psig / 0-20 bar	**K4520N14300**
Square flush mount gauge	
0-4 bar	**K4511SCR04B**
0-11 bar	**K4511SCR11B**
0-60 psig	**K4511SCR060**
0-160 psig	**K4511SCR160**
Square with adapter kit	
0-4 bar	**P6G-PR10040**
0-11 bar	**P6G-PR10110**
0-60 psig	**P6G-PR90060**
0-160 psig	**P6G-PR90160**

For best performance, regulated pressure should always be set by increasing the pressure up to the desired setting.

Parker Hannifin Corporation
Pneumatic Division
Richland, Michigan
www.parker.com/globalfrl

Compact Common - P1 Regulator - P32

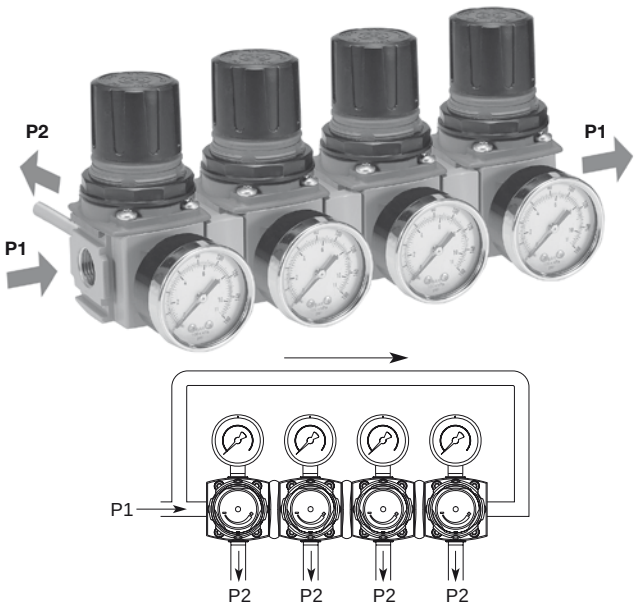

Symbols

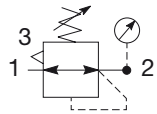

Self relieving regulator with gauge

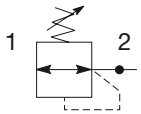

Non-relieving regulator

- Manifold style regulator with line pressure on both sides.
- Pressure output is at front or rear.
- Inlet ports 1/4", 3/8" or 1/2" (NPT, BSPP & BSPT)
- Working port 1/4"
- Robust construction
- Secondary pressure ranges 0-2 bar (0-30 psig), 0-4 bar, (0-60 psig), 0-8 bar (0-125 psig), 0-17 bar (0-250 psig)
- Secondary aspiration plus balanced poppet provides quick response and accurate pressure regulation
- Relieving & Non-relieving types
- Non-rising knob

Options:

P32HB 9 2 B N N P

Basic series	
Global modular compact regulator	P32HB

Thread type	
BSPP	**1**
BSPT	2
NPT	**9**

Port size †	
1/4	**2**
3/8	**3**
1/2	**4**

† Working port 1/4".

Relief	
Relieving	**B**
Non-relieving	**N**

Note: Regulators will reverse flow as standard.

Adjustment	
N	**Non-rising knob**
T	**T-Handle**

Adjustment range			
With square gauge		**With round gauge**	
psig	**bar**	**Z**	**2 bar; 30 psig; 0.2 MPa**
1 = 30*	**V = 2***	**M**	**4 bar; 60 psig; 0.4 MPa**
3 = 60	**S = 4**	**G**	**8 bar; 125 psig; 0.8 MPa**
5 = 125	**T = 8**	**J**	**17 bar; 250 psig; 1.7 MPa**
		Without gauge	
		Y	**2 bar; 30 psig; 0.2 MPa**
		L	**4 bar; 60 psig; 0.4 MPa**
		N	**8 bar; 125 psig; 0.8 MPa**
		H	**17 bar; 250 psig; 1.7 MPa**

* Unit comes with 0-4 bar or 0-60 psig gauge respectively.

Mounting	
P	**Plastic panel mount nut**

Bold items are most common.

Port size	Description	Flow‡ dm^3/s (scfm)	Max. bar (psig)	Height mm (inches)	Width mm (inches)	Depth mm (inches)	Part number†
1/4"	8 bar (125 psig) relieving	30 (64)	20 (300)	136 (5.4)	60 (2.36)	60 (2.36)	**P32HB92BNNP**
3/8"	8 bar (125 psig) relieving	30 (64)	20 (300)	136 (5.4)	60 (2.36)	60 (2.36)	**P32HB93BNNP**
1/2"	8 bar (125 psig) relieving	30 (64)	20 (300)	136 (5.4)	60 (2.36)	60 (2.36)	**P32HB94BNNP**

† **Standard part numbers shown in bold. For other models refer to Options chart above.**
‡ Flow with 10 bar (145 psig) inlet pressure, 6.3 bar (91.3) psig) set pressure and 1 bar (14.5 psig) pressure drop.

Parker Hannifin Corporation
Pneumatic Division
Richland, Michigan
www.parker.com/globalfrl

Specifications

Flow capacity*	1/4	30 dm^3/s (64 scfm)
	3/8	30 dm^3/s (64 scfm)
	1/2	30 dm^3/s (64 scfm)
Operating temperature		-25°C to 65.5°C (-13°F to 150°F)
Max. supply pressure		20 bar (300 psig)
Adjusting range pressure		0-2 bar (30 psig) 0-4 bar (60 psig) 0-8 bar (125 psig) 0-17 bar (250 psig)
Port size	BSPP / BSPT / NPT	1/4, 3/8, 1/2
Gauge port (2 ea.)	BSPP / BSPT / NPT	1/4
Weight		0.50 kg (1.10 lbs)

* Inlet pressure 10 bar (145 psig). Secondary pressure 6.3 bar (91.3 psig).

Material Specifications

Body		Aluminum
Adjustment knob		Acetal
Bonnet		33% Glass-filled nylon
Diaphragm assembly		Nitrile / Zinc
Valve assembly		Brass / Nitrile
Springs	Main regulating valve	Steel S.S.
Seals		Nitrile
Panel nut		Acetal

Dimensions mm (inches)

NOTE: 48 mm (1.90 in.) hole required for panel nut mounting.

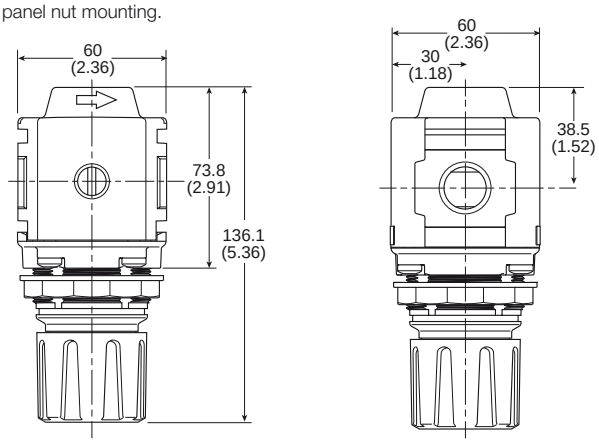

⚠ WARNING

Product rupture can cause serious injury.
Do not connect regulator to bottled gas.
Do not exceed Maximum primary pressure rating.

CAUTION:

REGULATOR PRESSURE ADJUSTMENT – The working range of knob adjustment is designed to permit outlet pressures within their full range. Pressure adjustment beyond this range is also possible because the knob is not a limiting device. This is a common characteristic of most industrial regulators, and limiting devices may be obtained only by special design. For best performance, regulated pressure should always be set by increasing the pressure up to the desired setting.

Flow Charts

P32 Common Port Regulator

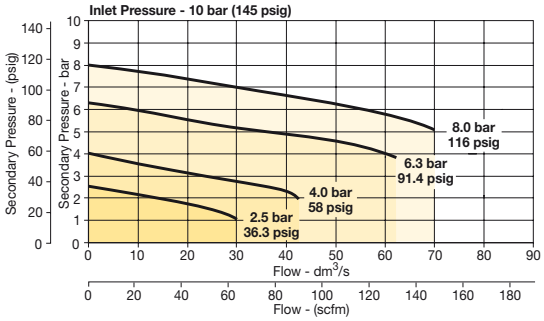

Repair and Service Kits

Regulator repair kit - relieving	**P32KB00RB**
Regulator repair kit - non-relieving	**P32KB00RC**
Panel mount nut - aluminum	**P32KA00MM**
Panel mount nut - plastic	**P32KA00MP**
Angle bracket (attaches via panel nut)	**P32KB00MR**
T-bracket with body connector	**P32KA00MT**
T-bracket	**P32KA00MB**
Body connector	**P32KA00CB**

Gauges

50mm (2") Round 1/4" center back mount	
0-30 psig / 0-2 bar	**K4520N14030**
0-60 psig / 0-4 bar	**K4520N14060**
0-160 psig / 0-11 bar	**K4520N14160**
0-300 psig / 0-20 bar	**K4520N14300**
Square flush mount gauge	
0-4 bar	**K4511SCR04B**
0-11 bar	**K4511SCR11B**
0-60 psig	**K4511SCR060**
0-160 psig	**K4511SCR160**
Square with adapter kit	
0-4 bar	**P6G-PR10040**
0-11 bar	**P6G-PR10110**
0-60 psig	**P6G-PR90060**
0-160 psig	**P6G-PR90160**

For best performance, regulated pressure should always be set by increasing the pressure up to the desired setting.

Parker Hannifin Corporation
Pneumatic Division
Richland, Michigan
www.parker.com/globalfrl

Standard Regulator - P33

Symbols

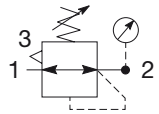

Self relieving regulator with gauge

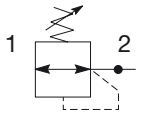

Non-relieving regulator

- Integral 1/2" or 3/4" ports (NPT, BSPP & BSPT)
- Robust but lightweight aluminum construction
- Secondary pressure ranges 0-2 bar (0-30 psig), 0-4 bar, (0-60 psig), 0-8 bar (0-125 psig), 0-17 bar (0-250 psig)
- Secondary aspiration plus balanced poppet provides quick response and accurate pressure regulation
- Relieving & Non-relieving types
- Non-rising knob

Options:

P33RA 9 6 B N N P

Basic series	
Global modular standard regulator	P33RA

Thread type	
BSPP	**1**
BSPT	2
NPT	**9**

Port size	
1/2	**4**
3/4	**6**

Relief	
Relieving	**B**
Non-relieving	**N**
Reverse flow-relieving	**R**

Adjustment	
Non-rising knob	**N**

Adjustment range	
	With round gauge
Z	**2 bar; 30 psig; 0.2 MPa**
M	**4 bar; 60 psig; 0.4 MPa**
G	**8 bar; 125 psig; 0.8 MPa**
J	**17 bar; 250 psig; 1.7 MPa**
	Without gauge
Y	**2 bar; 30 psig; 0.2 MPa**
L	**4 bar; 60 psig; 0.4 MPa**
N	**8 bar; 125 psig; 0.8 MPa**
H	**17 bar; 250 psig; 1.7 MPa**

Mounting	
P	**Plastic panel mount nut**

Bold items are most common.

Port size	Description	Flow‡ dm^3/s (scfm)	Max. bar (psig)	Height mm (inches)	Width mm (inches)	Part number†
1/2"	8 bar (125 psig) relieving	110 (233)	20 (300)	149 (5.87)	73 (2.87)	**P33RA94BNNP**
1/2"	8 bar (125 psig) relieving + gauge	110 (233)	20 (300)	149 (5.87)	73 (2.87)	**P33RA94BNGP**
3/4"	8 bar (125 psig) relieving	110 (233)	20 (300)	149 (5.87)	73 (2.87)	**P33RA96BNNP**
3/4"	8 bar (125 psig) relieving + gauge	110 (233)	20 (300)	149 (5.87)	73 (2.87)	**P33RA96BNGP**

† **Standard part numbers shown in bold. For other models refer to Options chart above.**
‡ Flow with 10 bar (145 psig) inlet pressure, 6.3 bar (91.3) psig) set pressure and 1 bar (14.5 psig) pressure drop.

Parker Hannifin Corporation
Pneumatic Division
Richland, Michigan
www.parker.com/globalfrl

Specifications

Flow capacity*	1/2	110 dm³/s (233 scfm)
	3/4	110 dm³/s (233 scfm)
Operating temperature		-25°C to 65.5°C (-13°F to 150°F)
Max. supply pressure		20 bar (300 psig)
Adjusting range pressure		0-2 bar (30 psig) 0-4 bar (60 psig) 0-8 bar (125 psig) 0-17 bar (250 psig)
Port size	BSPP / BSPT / NPT	1/2, 3/4
Gauge port (2 ea.)	BSPP / BSPT / NPT	1/4
Weight		0.62 kg (1.37 lbs)

* Inlet pressure 10 bar (145 psig). Secondary pressure 6.3 bar (91.3 psig).

Material Specifications

Body		Aluminum
Adjustment knob		Acetal
Body cap		ABS
Bonnet		33% Glass-filled nylon
Diaphragm assembly		Nitrile / Zinc
Bonnet		33% Glass-filled nylon
Valve assembly		Brass / Nitrile
Springs	Main regulating valve	Steel S.S.
Seals		Nitrile
Panel nut		Acetal

Dimensions mm (inches)

NOTE: 61 mm (2.40 in.) hole required for panel nut mounting.

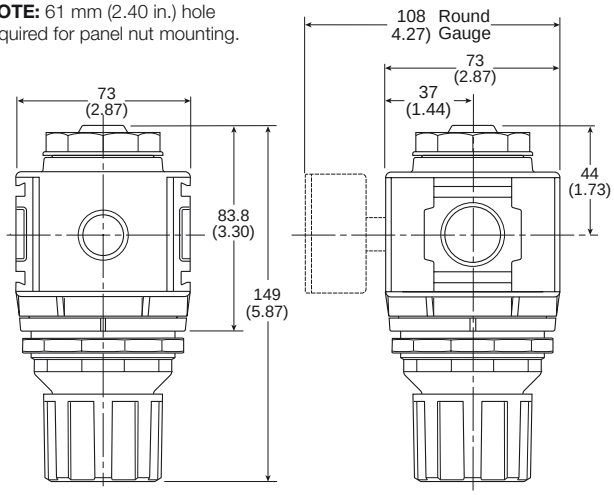

⚠ WARNING

Product rupture can cause serious injury.
Do not connect regulator to bottled gas.
Do not exceed Maximum primary pressure rating.

CAUTION:

REGULATOR PRESSURE ADJUSTMENT – The working range of knob adjustment is designed to permit outlet pressures within their full range. Pressure adjustment beyond this range is also possible because the knob is not a limiting device. This is a common characteristic of most industrial regulators, and limiting devices may be obtained only by special design. For best performance, regulated pressure should always be set by increasing the pressure up to the desired setting.

Flow Charts

1/2 Regulator

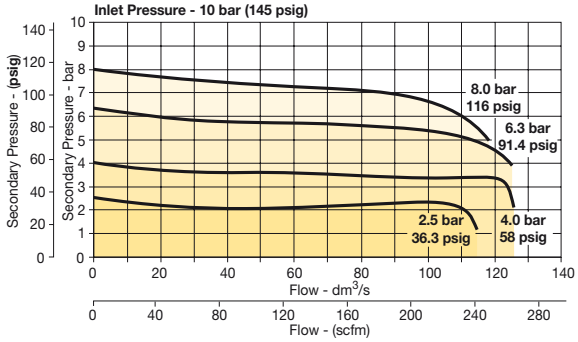

3/4 Regulator

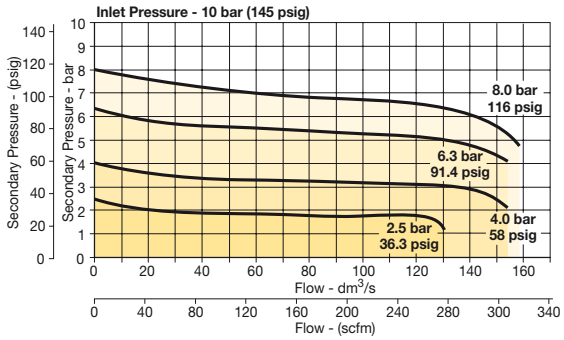

Repair and Service Kits

Regulator repair kit - relieving	**P33KA00RB**
Regulator repair kit - non-relieving	**P33KA00RC**
Panel mount nut - aluminum	**P33KA00MM**
Panel mount nut - plastic	**P33KA00MP**
Angle bracket (attaches via panel nut)	**P33KA00MR**
T-bracket with body connector	**P32KA00MT**
T-bracket	**P32KA00MB**
Body connector	**P32KA00CB**

Gauges

50mm (2") Round 1/4" center back mount

0-30 psig / 0-2 bar	**K4520N14030**
0-60 psig / 0-4 bar	**K4520N14060**
0-160 psig / 0-11 bar	**K4520N14160**
0-300 psig / 0-20 bar	**K4520N14300**

For best performance, regulated pressure should always be set by increasing the pressure up to the desired setting.

Parker Hannifin Corporation
Pneumatic Division
Richland, Michigan
www.parker.com/globalfrl

Mini Filter / Regulator - P31

Symbols

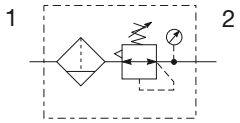

- Integral 1/4" ports (NPT, BSPP & BSPT)
- High efficiency 5 micron element as standard
- Excellent water removal efficiency
- Robust but lightweight aluminum construction
- Positive bayonet latch to ensure correct & safe fitting
- Secondary pressure ranges 0-2 bar (0-30 psig), 0-4 bar, (0-60 psig), 0-8 bar (0-125 psig), 0-16 bar (0-232 psig)
- Secondary aspiration plus balanced poppet provides quick response and accurate pressure regulation

Options:

P31EB 9 2 E G M B N 5 P

Basic series	
Global modular mini filter / regulator	P31EB

Thread type	
BSPP	**1**
BSPT	2
NPT	**9**

Port size	
1/4	**2**

Element	
5µ Element	**E**

Bowl type	
Poly bowl with bowl guard	**G**
Metal bowl without sight gauge	**M**

Drain type	
Pulse drain	**B**
Manual drain	**M**

Relief	
B	**Relieving**
N	**Non-relieving**

Adjustment	
N	**Non-rising knob**

Mounting	
P	**Plastic panel mount nut**

Adjustment range

With square gauge	
psig	bar
1 = 30*	V = 2*
3 = 60	S = 4
5 = 125	T = 8

* Unit comes with 0-4 bar or 0-60 psig gauge respectively.
§ Not available with poly bowl with bowl guard.

With round gauge	
Z	**2 bar; 30 psig; 0.2 MPa**
M	**4 bar; 60 psig; 0.4 MPa**
G	**8 bar; 125 psig; 0.8 MPa**
J§	**16 bar; 232 psig; 1.6 MPa**

Without gauge	
Y	**2 bar; 30 psig; 0.2 MPa**
L	**4 bar; 60 psig; 0.4 MPa**
N	**8 bar; 125 psig; 0.8 MPa**
H§	**16 bar; 232 psig; 1.6 MPa**

Bold items are most common.

Port size	Description	Flow‡ dm^3/s (scfm)	Max. bar (psig)	Height mm (inches)	Width mm (inches)	Depth mm (inches)	Part number†
1/4"	8 bar (125 psig) relieving - poly bowl - manual drain	15 (32)	10 (150)	176.9 (6.96)	40 (1.58)	61.3 (2.41)	**P31EB92EGMBN5P**
1/4"	8 bar (125 psig) relieving - poly bowl - pulse drain	15 (32)	10 (150)	172.0 (6.77)	40 (1.58)	61.3 (2.41)	**P31EB92EGBBN5P**
1/4"	8 bar (125 psig) relieving - metal bowl - manual drain	15 (32)	17 (250)	176.9 (6.96)	40 (1.58)	61.3 (2.41)	**P31EB92EMMBN5P**
1/4"	8 bar (125 psig) relieving - metal bowl - pulse drain	15 (32)	17 (250)	172.0 (6.77)	40 (1.58)	61.3 (2.41)	**P31EB92EMBBN5P**

† **Standard part numbers shown in bold. For other models refer to Options chart above.**
‡ Flow with 10 bar (145 psig) inlet pressure, 6.3 bar (91.3 psig) set pressure and 1 bar (14.5 psig) pressure drop.

Parker Hannifin Corporation
Pneumatic Division
Richland, Michigan
www.parker.com/globalfrl

Specifications

Flow capacity*	1/4	15 dm^3/s (32 scfm)
Operating temperature†	Plastic bowl Metal bowl	-10°C to 52°C (14°F to 125°F) -10°C to 65.5°C (14°F to 150°F)
Max. supply pressure	Plastic bowl Metal bowl	10 bar (150 psig) 17 bar (250 psig)
Standard filtration		5 micron
Useful retention		12 cm^3 (0.4 US oz.)
Adjusting range pressure		0-2 bar (30 psig) 0-4 bar (60 psig) 0-8 bar (125 psig) 0-16 bar (232 psig)
Port size	BSPP / BSPT / NPT	1/4
Gauge port (2 ea.)**	BSPP / BSPT / NPT	1/8
Weight		0.19 kg (0.42 lbs)

* Inlet pressure 10 bar (145 psig). Secondary pressure 6.3 bar (91.3 psig).
** Non-gauge option only.
† Units with square gauges: -15°C to 65.5°C (5°F to 150°F)

Air quality:
Within ISO 8573-1: 1991 Class 3 (Particulates)
Within ISO 8573-1: 2001 Class 6 (Particulates)

⚠ WARNING

Product rupture can cause serious injury.
Do not connect regulator to bottled gas.
Do not exceed Maximum primary pressure rating.

Dimensions mm (inches)

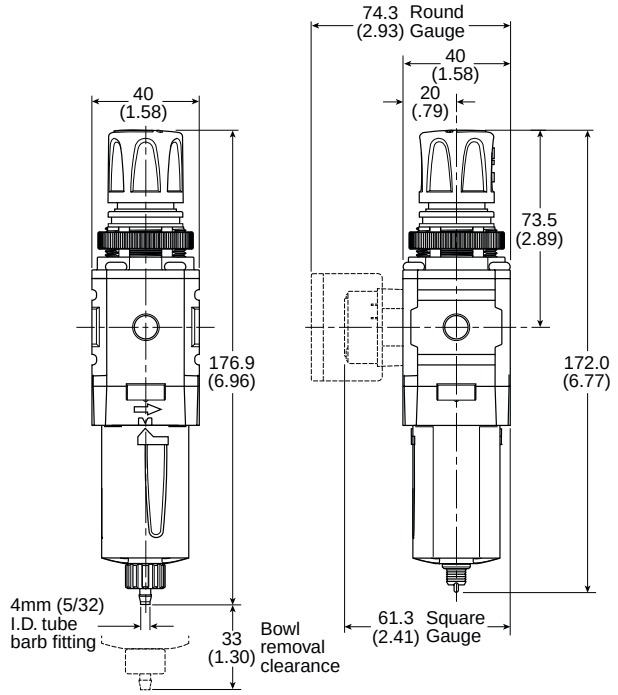

Manual Drain **Pulse Drain**

Flow Charts

1/4 Filter / Regulator

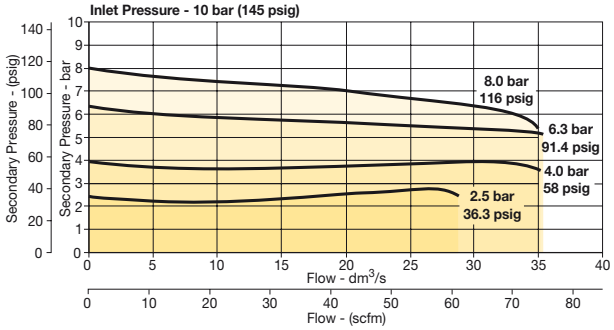

Material Specifications

Body		Aluminum
Adjustment knob		Acetal
Body cap		ABS
Bonnet		PBT
Bowl	Plastic bowl Metal bowl	Polycarbonate Aluminum
Bowl guard		Nylon
Filter element		Polyethylene
Seals		Nitrile
Springs		Steel
Valve assembly		Brass / Nitrile
Diaphragm assembly		Brass / Nitrile
Panel nut		Acetal

For best performance, regulated pressure should always be set by increasing the pressure up to the desired setting.

Repair and Service Kits

Plastic bowl / Bowl guard manual drain	**P31KB00BGM**
Plastic bowl / Bowl guard pulse drain	**P31KB00BGB**
Metal bowl / w/o sight gauge pulse drain	**P31KB00BMB**
5µ particle filter element	**P31KA00ESE**
Regulator repair kit - relieving	**P31KB00RB**
Regulator repair kit - non-relieving	**P31KB00RC**
Panel mount nut - aluminum	**P31KA00MM**
Panel mount nut - plastic	**P31KA00MP**
Angle bracket (attaches via panel nut)	**P31KB00MR**
C-bracket (fits to body)	**P31KA00MW**
T-bracket with body connector	**P31KA00MT**
Body connector	**P31KA00CB**

Gauges

Square flush mount gauge

0-4 bar	**K4511SCR04B**
0-11 bar	**K4511SCR11B**
0-60 psig	**K4511SCR060**
0-160 psig	**K4511SCR160**

For best performance, regulated pressure should always be set by increasing the pressure up to the desired setting.

Parker Hannifin Corporation
Pneumatic Division
Richland, Michigan
www.parker.com/globalfrl

Compact Filter / Regulator - P32

Symbols

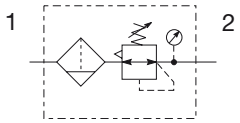

- Integral 1/4", 3/8" or 1/2" ports (NPT, BSPP & BSPT)
- High efficiency 5 micron element as standard
- Excellent water removal efficiency
- Robust but lightweight aluminum construction
- Positive bayonet latch to ensure correct & safe fitting
- Secondary pressure ranges 0-2 bar (0-30 psig), 0-4 bar, (0-60 psig), 0-8 bar (0-125 psig), 0-17 bar (0-250 psig)
- Secondary aspiration plus balanced poppet provides quick response and accurate pressure regulation

Options:

P32EB 9 2 E G M B N 5 P

Basic series

Global modular compact filter / regulator	P32EB

Thread type

BSPP	**1**
BSPT	2
NPT	**9**

Port size

1/4	**2**
3/8	**3**
1/2	**4**

Element

5µ Element	**E**

Bowl type

Poly bowl with bowl guard	**G**
Metal bowl without sight gauge	**M**
Metal bowl with sight gauge	**S**

Drain type

Manual drain	**M**
Auto drain	**A**

Relief

B	**Relieving**
N	**Non-relieving**

Adjustment

N	**Non-rising knob**
T	**T-Handle**

Adjustment range

With square gauge		With round gauge	
psig	bar		
1 = 30*	V = 2*	Z	2 bar; 30 psig; 0.2 MPa
3 = 60	S = 4	M	4 bar; 60 psig; 0.4 MPa
5 = 125	T = 8	G	8 bar; 125 psig; 0.8 MPa
		J§	17 bar; 250 psig; 1.7 MPa
		Without gauge	
		Y	2 bar; 30 psig; 0.2 MPa
		L	4 bar; 60 psig; 0.4 MPa
		N	8 bar; 125 psig; 0.8 MPa
		H§	17 bar; 250 psig; 1.7 MPa

* Unit comes with 0-4 bar or 0-60 psig gauge respectively.
§ Not available with poly bowl with bowl guard.

Mounting

P	**Plastic panel mount nut**

Bold items are most common.

Port size	Description	Flow‡ dm^3/s (scfm)	Max. bar (psig)	Height mm (inches)	Width mm (inches)	Depth mm (inches)	Part number†
1/4"	8 bar (125 psig) relieving - poly bowl - manual drain	42 (89)	10 (150)	261.6 (10.3)	60 (2.36)	93 (3.66)	**P32EB92EGMBNGP**
1/4"	8 bar (125 psig) relieving - poly bowl - auto drain	42 (89)	10 (150)	255.6 (10.1)	60 (2.36)	93 (3.66)	**P32EB92EGABNGP**
1/4"	8 bar (125 psig) relieving - metal bowl - manual drain	42 (89)	17 (250)	261.6 (10.3)	60 (2.36)	93 (3.66)	**P32EB92ESMBNGP**
1/4"	8 bar (125 psig) relieving - metal bowl - auto drain	42 (89)	17 (250)	255.6 (10.1)	60 (2.36)	93 (3.66)	**P32EB92ESABNGP**
3/8"	8 bar (125 psig) relieving - poly bowl - manual drain	58 (123)	10 (150)	261.6 (10.3)	60 (2.36)	93 (3.66)	**P32EB93EGMBNGP**
3/8"	8 bar (125 psig) relieving - poly bowl - auto drain	58 (123)	10 (150)	255.6 (10.1)	60 (2.36)	93 (3.66)	**P32EB93EGABNGP**
3/8"	8 bar (125 psig) relieving - metal bowl - manual drain	58 (123)	17 (250)	261.6 (10.3)	60 (2.36)	93 (3.66)	**P32EB93ESMBNGP**
3/8"	8 bar (125 psig) relieving - metal bowl - auto drain	58 (123)	17 (250)	255.6 (10.1)	60 (2.36)	93 (3.66)	**P32EB93ESABNGP**
1/2"	8 bar (125 psig) relieving - poly bowl - manual drain	64 (136)	10 (150)	261.6 (10.3)	60 (2.36)	93 (3.66)	**P32EB94EGMBNGP**
1/2"	8 bar (125 psig) relieving - poly bowl - auto drain	64 (136)	10 (150)	255.6 (10.1)	60 (2.36)	93 (3.66)	**P32EB94EGABNGP**
1/2"	8 bar (125 psig) relieving - metal bowl - manual drain	64 (136)	17 (250)	261.6 (10.3)	60 (2.36)	93 (3.66)	**P32EB94ESMBNGP**
1/2"	8 bar (125 psig) relieving - metal bowl - auto drain	64 (136)	17 (250)	255.6 (10.1)	60 (2.36)	93 (3.66)	**P32EB94ESABNGP**

† **Standard part numbers shown in bold. For other models refer to Options chart above.**
‡ Flow with 10 bar (145 psig) inlet pressure, 6.3 bar (91.3) psig) set pressure and 1 bar (14.5 psig) pressure drop.

Parker Hannifin Corporation
Pneumatic Division
Richland, Michigan
www.parker.com/globalfrl

Specifications

Flow capacity*	1/4	42 dm³/s (89 scfm)
	3/8	58 dm³/s (123 scfm)
	1/2	64 dm³/s (136 scfm)
Operating temperature	Plastic bowl	-25°C to 52°C (-13°F to 125°F)
	Metal bowl	-25°C to 65.5°C (-13°F to 150°F)
Max. supply pressure	Plastic bowl	10 bar (150 psig)
	Metal bowl	17 bar (250 psig)
Standard filtration		5 micron
Useful retention†		51 cm³ (1.7 US oz.)
Adjusting range pressure		0-2 bar (30 psig)
		0-4 bar (60 psig)
		0-8 bar (125 psig)
		0-17 bar (250 psig)
Port size	BSPP / BSPT / NPT	1/4, 3/8, 1/2
Gauge port (2 ea.)	BSPP / BSPT / NPT	1/4
Weight		0.53 kg (1.17 lbs)

* Inlet pressure 10 bar (145 psig). Secondary pressure 6.3 bar (91.3 psig).
† Useful retention refers to volume below the quiet zone baffle.

Air quality:
Within ISO 8573-1: 1991 Class 3 (Particulates); 2001 Class 6 (Particulates)

Material Specifications

Body		Aluminum
Adjustment knob		Acetal
Element retainer / Baffle		Acetal
Bowl	Plastic bowl	Polycarbonate
	Metal bowl	Zinc
Bowl guard		Nylon
Filter element		Sintered polyethylene
Seals		Nitrile
Springs	Main regulating / valve	Steel / S.S.
Valve assembly		Brass / Nitrile
Diaphragm assembly		Nitrile / Zinc
Panel nut		Acetal
Sight gauge	Metal bowl	Nylon

Dimensions mm (inches)

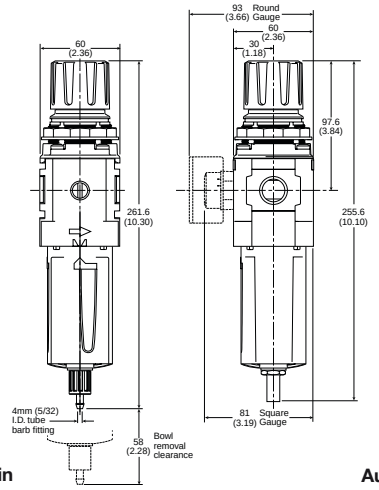

Manual Drain **Automatic Drain**

⚠ WARNING

Product rupture can cause serious injury.
Do not connect regulator to bottled gas.
Do not exceed Maximum primary pressure rating.

Flow Charts

1/4 Filter / Regulator

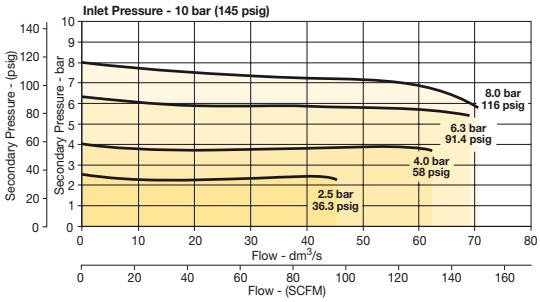

3/8 Filter/Regulator

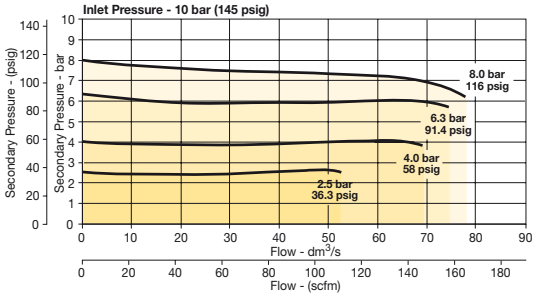

1/2 Filter/Regulator

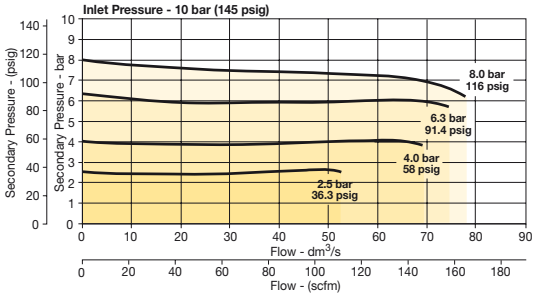

Repair and Service Kits

Plastic bowl / Bowl guard manual drain	**P32KB00BGM**
Metal bowl / Sight gauge manual drain	**P32KB00BSM**
Auto drain	**P32KA00DA**
5µ particle filter element	**P32KA00ESE**
Regulator repair kit - relieving	**P32KB00RB**
Regulator repair kit - non-relieving	**P32KB00RC**
Panel mount nut - aluminum	**P32KA00MM**
Panel mount nut - plastic	**P32KA00MP**
Angle bracket (fits to panel mount threads)	**P32KB00MR**
T-bracket (fits to body connector)	**P32KA00MB**
T-bracket with body connector	**P32KA00MT**
Body connector	**P32KA00CB**

Gauges

50mm (2") Round 1/4" center back mount

0-30 psig / 0-2 bar	**K4520N14030**
0-60 psig / 0-4 bar	**K4520N14060**
0-160 psig / 0-11 bar	**K4520N14160**
0-300 psig / 0-20 bar	**K4520N14300**

For best performance, regulated pressure should always be set by increasing the pressure up to the desired setting.

Parker Hannifin Corporation
Pneumatic Division
Richland, Michigan
www.parker.com/globalfrl

Compact Semi-Precision Filter / Regulator - P32

Symbols

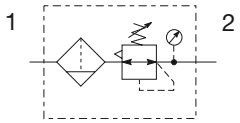

- Integral 1/4", 3/8" or 1/2" ports (NPT, BSPP & BSPT)
- High efficiency 5 micron element as standard
- Excellent water removal efficiency
- Robust but lightweight aluminum construction
- Positive bayonet latch to ensure correct & safe fitting
- Secondary pressure ranges 0-2 bar (0-30 psig), 0-4 bar, (0-60 psig), 0-8 bar (0-125 psig), 0-17 bar (0-250 psig)
- Secondary aspiration plus balanced poppet provides quick response and accurate pressure regulation

Options:

P32EB 9 2 E G M P N 5 P

Basic series

Global modular compact filter / regulator	P32EB

Thread type

BSPP	**1**
BSPT	2
NPT	**9**

Port size

1/4	**2**
3/8	**3**
1/2	**4**

Element

5µ Element	E

Bowl type

Poly bowl with bowl guard	**G**
Metal bowl without sight gauge	**M**
Metal bowl with sight gauge	**S**

Drain type

Manual drain	**M**
Auto drain	**A**

Relief

P	**Semi-Precision Relieving**
T	**Semi-Precision Non-relieving**

Adjustment

N	**Non-rising knob**
T	**T-Handle**

Adjustment range

With square gauge		With round gauge	
psig	bar		
1 = 30*	V = 2*	Z	2 bar; 30 psig; 0.2 MPa
3 = 60	S = 4	M	4 bar; 60 psig; 0.4 MPa
5 = 125	T = 8	G	8 bar; 125 psig; 0.8 MPa
		J§	17 bar; 250 psig; 1.7 MPa
		Without gauge	
		Y	2 bar; 30 psig; 0.2 MPa
		L	4 bar; 60 psig; 0.4 MPa
		N	8 bar; 125 psig; 0.8 MPa
		H§	17 bar; 250 psig; 1.7 MPa

* Unit comes with 0-4 bar or 0-60 psig gauge respectively.
§ Not available with poly bowl with bowl guard.

Mounting

P	**Plastic panel mount nut**

Bold items are most common.

Port size	Description	Flow‡ dm^3/s (scfm)	Max. bar (psig)	Height mm (inches)	Width mm (inches)	Depth mm (inches)	Part number†
1/4"	8 bar (125 psig) relieving - poly bowl - manual drain	35 (75)	10 (150)	261.6 (10.3)	60 (2.36)	93 (3.66)	**P32EB92EGMPNGP**
1/4"	8 bar (125 psig) relieving - poly bowl - auto drain	35 (75)	10 (150)	255.6 (10.1)	60 (2.36)	93 (3.66)	**P32EB92EGAPNGP**
1/4"	8 bar (125 psig) relieving - metal bowl - manual drain	35 (75)	17 (250)	261.6 (10.3)	60 (2.36)	93 (3.66)	**P32EB92ESMPNGP**
1/4"	8 bar (125 psig) relieving - metal bowl - auto drain	35 (75)	17 (250)	255.6 (10.1)	60 (2.36)	93 (3.66)	**P32EB92ESAPNGP**
3/8"	8 bar (125 psig) relieving - poly bowl - manual drain	35 (75)	10 (150)	261.6 (10.3)	60 (2.36)	93 (3.66)	**P32EB93EGMPNGP**
3/8"	8 bar (125 psig) relieving - poly bowl - auto drain	35 (75)	10 (150)	255.6 (10.1)	60 (2.36)	93 (3.66)	**P32EB93EGAPNGP**
3/8"	8 bar (125 psig) relieving - metal bowl - manual drain	35 (75)	17 (250)	261.6 (10.3)	60 (2.36)	93 (3.66)	**P32EB93ESMPNGP**
3/8"	8 bar (125 psig) relieving - metal bowl - auto drain	35 (75)	17 (250)	255.6 (10.1)	60 (2.36)	93 (3.66)	**P32EB93ESAPNGP**
1/2"	8 bar (125 psig) relieving - poly bowl - manual drain	35 (75)	10 (150)	261.6 (10.3)	60 (2.36)	93 (3.66)	**P32EB94EGMPNGP**
1/2"	8 bar (125 psig) relieving - poly bowl - auto drain	35 (75)	10 (150)	255.6 (10.1)	60 (2.36)	93 (3.66)	**P32EB94EGAPNGP**
1/2"	8 bar (125 psig) relieving - metal bowl - manual drain	35 (75)	17 (250)	261.6 (10.3)	60 (2.36)	93 (3.66)	**P32EB94ESMPNGP**
1/2"	8 bar (125 psig) relieving - metal bowl - auto drain	35 (75)	17 (250)	255.6 (10.1)	60 (2.36)	93 (3.66)	**P32EB94ESAPNGP**

† **Standard part numbers shown in bold. For other models refer to Options chart above.**
‡ Flow with 10 bar (145 psig) inlet pressure, 6.3 bar (91.3) psig) set pressure and 1 bar (14.5 psig) pressure drop.

Parker Hannifin Corporation
Pneumatic Division
Richland, Michigan
www.parker.com/globalfrl

Specifications

Flow capacity*	1/4	35 dm³/s (75 scfm)
	3/8	35 dm³/s (75 scfm)
	1/2	35 dm³/s (75 scfm)
Effect of supply pressure variation		0.04 bar (0.6 PSIG) for 1.7 bar (25 PSIG) change in P1
Operating temperature	Plastic bowl	-25°C to 52°C (-13°F to 125°F)
	Metal bowl	-25°C to 65.5°C (-13°F to 150°F)
Max. supply pressure	Plastic bowl	10 bar (150 psig)
	Metal bowl	17 bar (250 psig)
Standard filtration		5 micron
Useful retention†		51 cm³ (1.7 US oz.)
Adjusting range pressure		0-2 bar (30 psig) 0-4 bar (60 psig) 0-8 bar (125 psig) 0-17 bar (250 psig)
Port size	BSPP / BSPT / NPT	1/4, 3/8, 1/2
Gauge port (2 ea.)	BSPP / BSPT / NPT	1/4
Weight		0.53 kg (1.17 lbs)

* Inlet pressure 10 bar (145 psig). Secondary pressure 6.3 bar (91.3 psig).
† Useful retention refers to volume below the quiet zone baffle.

Air quality:
Within ISO 8573-1: 1991 Class 3 (Particulates); 2001 Class 6 (Particulates)

Material Specifications

Body		Aluminum
Adjustment knob		Acetal
Element retainer / Baffle		Acetal
Bowl	Plastic bowl	Polycarbonate
	Metal bowl	Zinc
Bowl guard		Nylon
Filter element		Sintered polyethylene
Seals		Nitrile
Springs	Main regulating / valve	Steel / S.S.
Valve assembly		Brass / Nitrile
Diaphragm assembly		Nitrile / Zinc
Panel nut		Acetal
Sight gauge	Metal bowl	Nylon

Dimensions mm (inches)

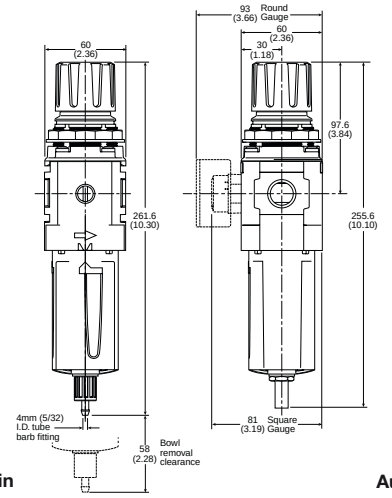

Manual Drain **Automatic Drain**

⚠ WARNING

Product rupture can cause serious injury.
Do not connect regulator to bottled gas.
Do not exceed Maximum primary pressure rating.

Flow Charts

1/4 Filter / Regulator

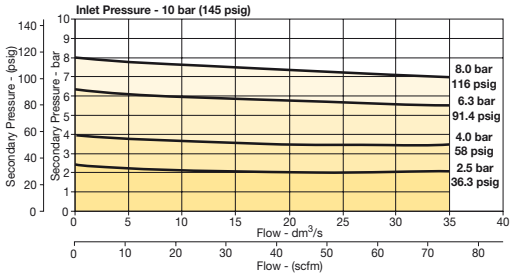

3/8 Filter/Regulator

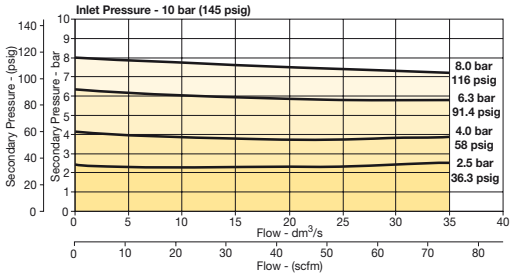

1/2 Filter/Regulator

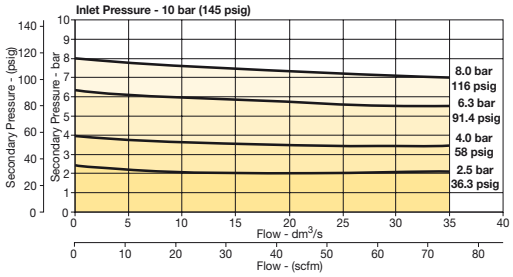

Repair and Service Kits

Plastic bowl / Bowl guard manual drain	**P32KB00BGM**
Metal bowl / Sight gauge manual drain	**P32KB00BSM**
Auto drain	**P32KA00DA**
5µ particle filter element	**P32KA00ESE**
Regulator repair kit - relieving	**P32KB00RB**
Regulator repair kit - non-relieving	**P32KB00RC**
Panel mount nut - aluminum	**P32KA00MM**
Panel mount nut - plastic	**P32KA00MP**
Angle bracket (fits to panel mount threads)	**P32KB00MR**
T-bracket (fits to body connector)	**P32KA00MB**
T-bracket with body connector	**P32KA00MT**
Body connector	**P32KA00CB**

Gauges

50mm (2") Round 1/4" center back mount

0-30 psig / 0-2 bar	**K4520N14030**
0-60 psig / 0-4 bar	**K4520N14060**
0-160 psig / 0-11 bar	**K4520N14160**
0-300 psig / 0-20 bar	**K4520N14300**

For best performance, regulated pressure should always be set by increasing the pressure up to the desired setting.

Parker Hannifin Corporation
Pneumatic Division
Richland, Michigan
www.parker.com/globalfrl

Standard Filter / Regulator - P33

Symbols

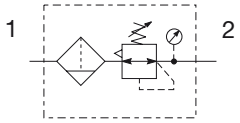

- Integral 1/2" or 3/4" ports (NPT, BSPP & BSPT)
- High efficiency 5 micron element as standard
- Excellent water removal efficiency
- Robust but lightweight aluminum construction
- Positive bayonet latch to ensure correct & safe fitting
- Secondary pressure ranges 0-2 bar (0-30 psig), 0-4 bar, (0-60 psig), 0-8 bar (0-125 psig), 0-17 bar (0-250 psig)
- Secondary aspiration plus balanced poppet provides quick response and accurate pressure regulation

Options:

P33EA 9 6 E G M B N 5 P

Basic series	
Global modular standard filter / regulator	P33EA

Thread type	
BSPP	1
BSPT	2
NPT	9

Port size	
1/2	4
3/4	6

Element	
5µ Element	E

Bowl type	
Poly bowl with bowl guard	G
Metal bowl without sight gauge	M
Metal bowl with sight gauge	S

Drain type	
M	Manual drain
A	Auto drain

Relief	
B	Relieving
N	Non-relieving

Adjustment	
N	Non-rising knob

Adjustment range	
	With round gauge
Z	2 bar; 30 psig; 0.2 MPa
M	4 bar; 60 psig; 0.4 MPa
G	8 bar; 125 psig; 0.8 MPa
J§	17 bar; 250 psig; 1.7 MPa
	Without gauge
Y	2 bar; 30 psig; 0.2 MPa
L	4 bar; 60 psig; 0.4 MPa
N	8 bar; 125 psig; 0.8 MPa
H§	17 bar; 250 psig; 1.7 MPa

§ Not available with poly bowl with bowl guard.

Mounting	
P	Plastic panel mount nut

Bold items are most common.

Port size	Description	Flow‡ dm^3/s (scfm)	Max. bar (psig)	Height mm (inches)	Width mm (inches)	Depth mm (inches)	Part number†
1/2"	8 bar (125 psig) relieving - poly bowl - manual drain	99 (210)	10 (150)	291 (11.44)	73 (2.87)	108 (4.27)	**P33EA94EGMBNGP**
1/2"	8 bar (125 psig) relieving - poly bowl - auto drain	99 (210)	10 (150)	285 (11.22)	73 (2.87)	108 (4.27)	**P33EA94EGABNGP**
1/2"	8 bar (125 psig) relieving - metal bowl - manual drain	99 (210)	17 (250)	291 (11.44)	73 (2.87)	108 (4.27)	**P33EA94ESMBNGP**
1/2"	8 bar (125 psig) relieving - metal bowl - auto drain	99 (210)	17 (250)	285 (11.22)	73 (2.87)	108 (4.27)	**P33EA94ESABNGP**
3/4"	8 bar (125 psig) relieving - poly bowl - manual drain	108 (230)	10 (150)	291 (11.44)	73 (2.87)	108 (4.27)	**P33EA96EGMBNGP**
3/4"	8 bar (125 psig) relieving - poly bowl - auto drain	108 (230)	10 (150)	285 (11.22)	73 (2.87)	108 (4.27)	**P33EA96EGABNGP**
3/4"	8 bar (125 psig) relieving - metal bowl - manual drain	108 (230)	17 (250)	291 (11.44)	73 (2.87)	108 (4.27)	**P33EA96ESMBNGP**
3/4"	8 bar (125 psig) Relieving - Metal bowl - Auto drain	108 (230)	17 (250)	285 (11.22)	73 (2.87)	108 (4.27)	**P33EA96ESABNGP**

† **Standard part numbers shown in bold. For other models refer to Options chart above.**
‡ Flow with 10 bar (145 psig) inlet pressure, 6.3 bar (91.3) psig) set pressure and 1 bar (14.5 psig) pressure drop.

Parker Hannifin Corporation
Pneumatic Division
Richland, Michigan
www.parker.com/globalfrl

Specifications

Flow capacity*	1/2	99 dm^3/s (210 scfm)
	3/4	108 dm^3/s (230 scfm)
Operating temperature	Plastic bowl	-25°C to 52°C (-13°F to 125°F)
	Metal bowl	-25°C to 65.5°C (-13°F to 150°F)
Supply pressure	Plastic bowl	10 bar (150 psig)
	Metal bowl	17 bar (250 psig)
Standard filtration		5 micron
Useful retention†		85 cm^3 (2.8 US oz.)
Adjusting range pressure		0-2 bar (30 psig)
		0-4 bar (60 psig)
		0-8 bar (125 psig)
		0-17 bar (250 psig)
Port size	BSPP / BSPT / NPT	1/2, 3/4
Gauge port (2 ea.)	BSPP / BSPT / NPT	1/4
Weight		0.85 kg (1.87 lbs)

* Inlet pressure 10 bar (145 psig). Secondary pressure 6.3 bar (91.3 psig).
† Useful retention refers to volume below the quiet zone baffle.

Air quality:
Within ISO 8573-1: 1991 Class 3 (Particulates); 2001 Class 6 (Particulates)

Material Specifications

Body		Aluminum
Adjustment knob		Acetal
Body cap		ABS
Element retainer / Baffle		Acetal
Bowls	Plastic bowl	Polycarbonate
	Metal bowl	Aluminum
Filter element		Sintered Polyethylene
Seals		Nitrile
Springs	Main regulating / Valve	Steel / S.S.
Valve assembly		Brass / Nitrile
Diaphragm assembly		Nitrile / Zinc
Panel nut		Acetal
Sight gauge	Metal bowl	Nylon

Dimensions mm (inches)

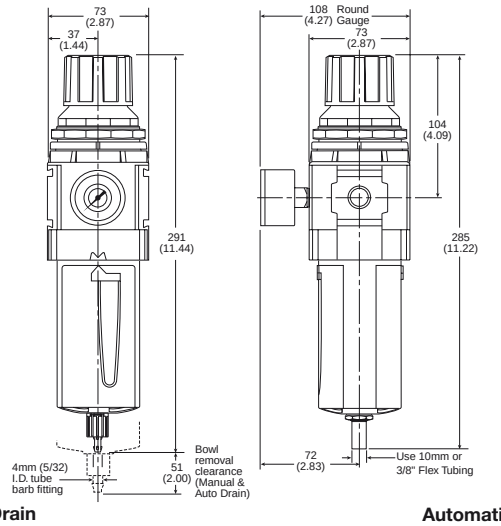

Manual Drain **Automatic Drain**

⚠ WARNING

Product rupture can cause serious injury.
Do not connect regulator to bottled gas.
Do not exceed Maximum primary pressure rating.

Flow Charts

1/2 Filter / Regulator

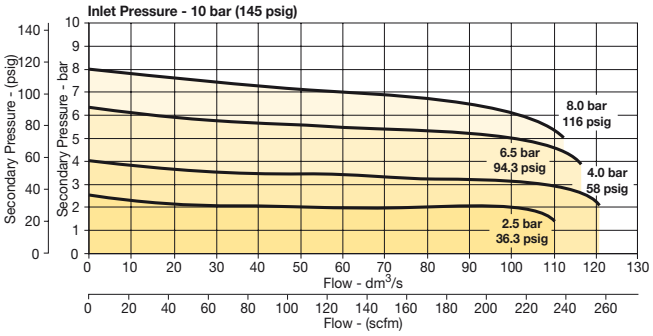

3/4 Filter/Regulator

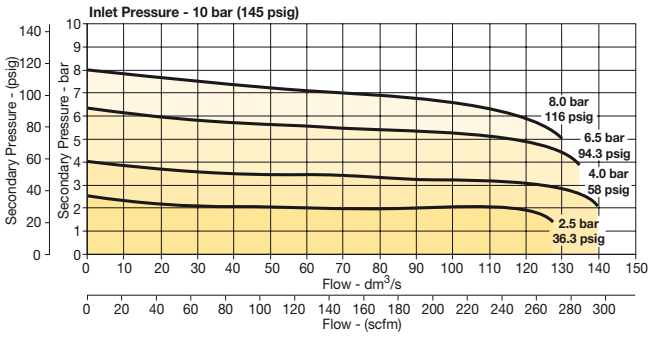

Repair and Service Kits

Plastic bowl / Bowl guard manual drain	**P33KA00BGM**
Metal bowl / Sight gauge manual drain	**P33KA00BSM**
Auto drain	**P32KA00DA**
5µ particle filter element	**P33KA00ESE**
Regulator repair kit - Relieving	**P33KA00RB**
Regulator repair kit - Non-relieving	**P33KA00RC**
Panel mount nut - Aluminum	**P33KA00MM**
Panel mount nut - Plastic	**P33KA00MP**
Angle bracket (fits to panel mount threads)	**P33KA00MR**
T-bracket (fits to body connector)	**P32KA00MB**
T-bracket with body connector	**P32KA00MT**
Body connector	**P32KA00CB**

Gauges

50mm (2") Round 1/4" center back mount

0-30 psig / 0-2 bar	**K4520N14030**
0-60 psig / 0-4 bar	**K4520N14060**
0-160 psig / 0-11 bar	**K4520N14160**
0-300 psig / 0-20 bar	**K4520N14300**

For best performance, regulated pressure should always be set by increasing the pressure up to the desired setting.

Parker Hannifin Corporation
Pneumatic Division
Richland, Michigan
www.parker.com/globalfrl

Mini Lubricator - P31

Symbol

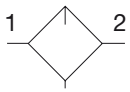

Lubricator
with drain

- Integral 1/4" ports (NPT, BSPP & BSPT)
- Robust but lightweight aluminum construction
- Proportional oil delivery over a wide range of air flows
- Finger tip ratchet control for precise oil drip rate adjustment

Options:

P31LB 9 2 L G N N

Basic series

Global modular mini lubricator	P31LB

Thread type

BSPP	**1**
BSPT	2
NPT	**9**

Port size

1/4	**2**

Lube type

Oil mist standard sight dome	**L**

Bowl type

G	**Poly bowl with bowl guard**
M	Metal bowl without sight gauge

Drain type

N	**No drain closed end**

Mounting

N	**No bracket**

Bold items are most common.

Port size	Description	Flow‡ dm^3/s (scfm)	Max. bar (psig)	Height mm (inches)	Width mm (inches)	Depth mm (inches)	Part number†
1/4"	Poly bowl - No drain	19 (40)	10 (150)	153.3 (6.04)	40 (1.58)	40 (1.58)	**P31LB92LGNN**
1/4"	Metal bowl - No drain	19 (40)	17 (250)	153.3 (6.04)	40 (1.58)	40 (1.58)	**P31LB92LMNN**

† **Standard part numbers shown in bold. For other models refer to Options chart above.**
‡ Flow with 6.3 bar (91.3 psig) inlet pressure and 0.34 bar (4.9 psig) pressure drop.

Parker Hannifin Corporation
Pneumatic Division
Richland, Michigan
www.parker.com/globalfrl

Specifications

Flow capacity*	1/4	19 dm^3/s (40 scfm)
Operating temperature	Plastic bowl Metal bowl	-10°C to 52°C (14°F to 125°F) -10°C to 65.5°C (14°F to 150°F)
Max. supply pressure	Plastic bowl Metal bowl	10 bar (150 psig) 17 bar (250 psig)
Useful retention		18 cm^3 (0.6 US oz.)
Port size	BSPP / BSPT / NPT	1/4
Weight		0.13 kg (0.29 lbs)

* Inlet pressure 6.3 bar (91.3 psig). Pressure drop 0.34 bar (4.9 psig).

Flow Charts

P31LB 1/4" Lubricator

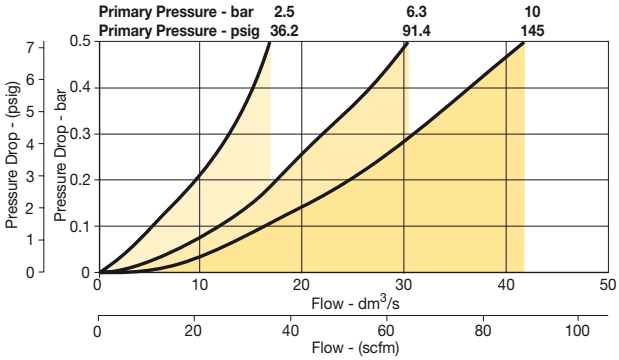

Material Specifications

Body		Aluminum
Body cap		ABS
Bowl	Plastic bowl Metal bowl	Polycarbonate Aluminum
Seals		Nitrile
Sight dome		Polycarbonate
Suggested lubricant		ISO / ASTM VG32
Pick-up filter		Sintered bronze

Dimensions mm (inches)

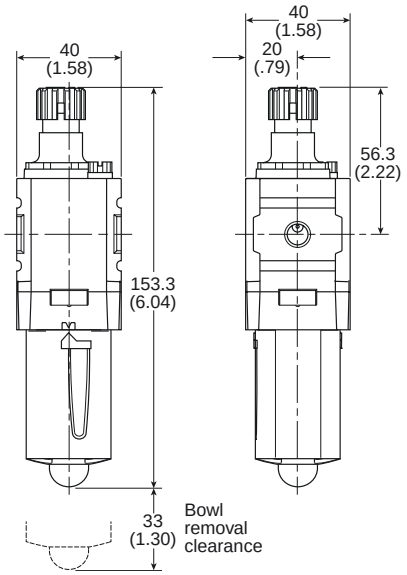

Repair and Service Kits

Plastic bowl / Bowl guard no drain	**P31KB00BGN**
Metal bowl / w/o sight gauge no drain	**P31KB00BMN**
Drip control assembly	**P32KA00PG**
Fill plug	**P31KA00PL**
C-bracket (fits to body)	**P31KA00MW**
T-bracket with body connector	**P31KA00MT**
Body connector	**P31KA00CB**

Suggested Lubricant ..... **F442 Oil**

Petroleum based oil of 100 to 200 SUS viscosity at 38°C (100°F) and an aniline point greater than 93°C (200°F)

(DO NOT USE OILS WITH ADDITIVES, COMPOUNDED OILS CONTAINING SOLVENTS, GRAPHITE, DETERGENTS, OR SYNTHETIC OILS.)

Parker Hannifin Corporation
Pneumatic Division
Richland, Michigan
www.parker.com/globalfrl

Compact Lubricator - P32

Symbol

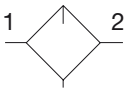

Lubricator
with drain

- Integral 1/4", 3/8" or 1/2" ports (NPT, BSPP & BSPT)
- Robust but lightweight aluminum construction
- Proportional oil delivery over a wide range of air flows
- Finger tip ratchet control for precise oil drip rate adjustment
- Fill from top under system pressure

Options:

P32LB 9 2 L G N N

Basic series	
Global modular compact lubricator	P32LB

Thread type	
BSPP	**1**
BSPT	2
NPT	**9**

Port size	
1/4	**2**
3/8	**3**
1/2	**4**

Lube type	
Oil mist standard sight dome	**L**

Bowl type	
G	**Poly bowl with bowl guard**
S	**Metal bowl with sight gauge**

Drain type	
N	**No drain closed end**

Mounting	
N	**No bracket**

Bold items are most common.

Port size	Description	Flow‡ dm^3/s (scfm)	Max. bar (psig)	Height mm (inches)	Width mm (inches)	Depth mm (inches)	Part number†
1/4"	Poly bowl - No drain	17 (35)	10 (150)	217.3 (8.56)	60 (2.36)	60 (2.36)	**P32LB92LGNN**
1/4"	Metal bowl - No drain	17 (35)	17 (250)	217.3 (8.56)	60 (2.36)	60 (2.36)	**P32LB92LSNN**
3/8"	Poly bowl - No drain	33 (70)	10 (150)	217.3 (8.56)	60 (2.36)	60 (2.36)	**P32LB93LGNN**
3/8"	Metal bowl - No drain	33 (70)	17 (250)	217.3 (8.56)	60 (2.36)	60 (2.36)	**P32LB93LSNN**
1/2"	Poly bowl - No drain	42 (90)	10 (150)	217.3 (8.56)	60 (2.36)	60 (2.36)	**P32LB94LGNN**
1/2"	Metal bowl - No drain	42 (90)	17 (250)	217.3 (8.56)	60 (2.36)	60 (2.36)	**P32LB94LSNN**

† **Standard part numbers shown in bold. For other models refer to Options chart above.**
‡ Flow with 6.3 bar (91.3 psig) inlet pressure and 0.34 bar (4.9 psig) pressure drop.

Parker Hannifin Corporation
Pneumatic Division
Richland, Michigan
www.parker.com/globalfrl

Specifications

Flow capacity*	1/4	17 dm^3/s (38 scfm)
	3/8	33 dm^3/s (70 scfm)
	1/2	42 dm^3/s (90 scfm)
Operating temperature	Plastic bowl	-10°C to 52°C (14°F to 125°F)
	Metal bowl	-10°C to 65.5°C (14°F to 150°F)
Max. supply pressure	Plastic bowl	10 bar (150 psig)
	Metal bowl	17 bar (250 psig)
Useful retention		121 cm^3 (4.09 US oz.)
Port size	BSPP / BSPT / NPT	1/4, 3/8, 1/2
Weight		0.31 kg (0.68 lbs)

* Inlet pressure 6.3 bar (91.3 psig). Pressure drop 0.34 bar (4.9 psig).

Material Specifications

Body		Aluminum
Body cap		ABS
Bowls	Plastic bowl	Polycarbonate
	Metal bowl	Aluminum
Seals		Nitrile
Sight dome		Polycarbonate
Sight gauge	Metal bowl	Nylon
Suggested lubricant		ISO / ASTM VG32
Pick-up filter		Sintered bronze

Dimensions mm (inches)

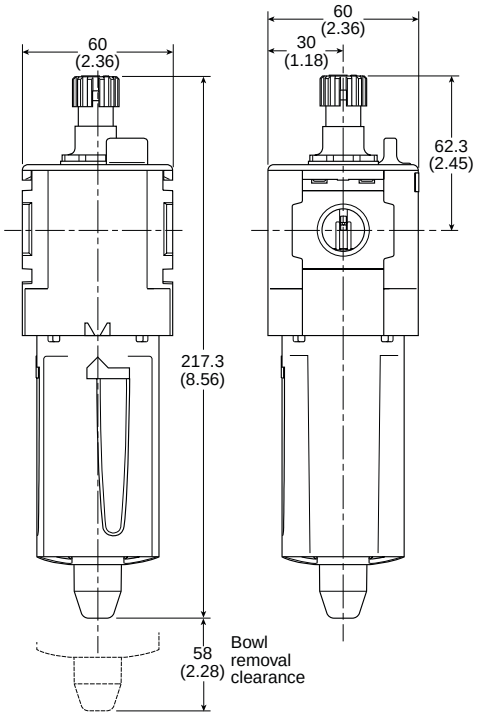

Flow Charts

1/4 Lubricator

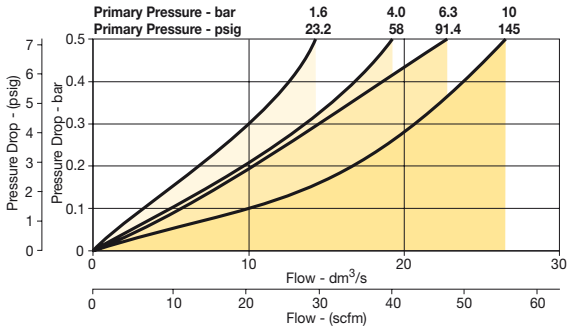

3/8 Lubricator

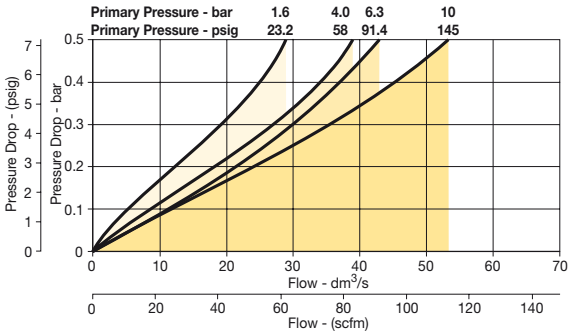

1/2 Lubricator

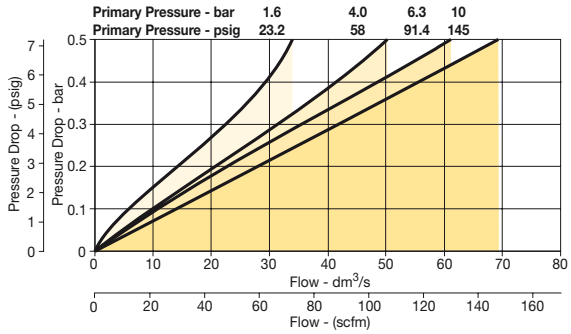

Repair and Service Kits

Plastic bowl / Bowl guard no drain	**P32KB00BGN**
Metal bowl / w/o sight gauge no drain	**P32KB00BMN**
Metal bowl / Sight gauge no drain	**P32KB00BSN**
Drip control assembly	**P32KA00PG**
Fill plug	**P32KA00PL**
L-bracket (fits to body)	**P32KA00ML**
T-bracket (fits to body connector)	**P32KA00MB**
T-bracket with body connector	**P32KA00MT**
Body connector	**P32KA00CB**

Suggested Lubricant ..... **F442 Oil**

Petroleum based oil of 100 to 200 SUS viscosity at 38°C (100°F) and an aniline point greater than 93°C (200°F)

(DO NOT USE OILS WITH ADDITIVES, COMPOUNDED OILS CONTAINING SOLVENTS, GRAPHITE, DETERGENTS, OR SYNTHETIC OILS.)

Parker Hannifin Corporation
Pneumatic Division
Richland, Michigan
www.parker.com/globalfrl

Standard Lubricator - P33

Symbol

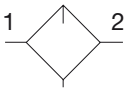

Lubricator
with drain

- Integral 1/2" or 3/4" ports (NPT, BSPP & BSPT)
- Robust but lightweight aluminum construction
- Proportional oil delivery over a wide range of air flows
- Finger tip ratchet control for precise oil drip rate adjustment
- Fill from top under system pressure

Options:

P33LA 9 6 L G N N

Basic series	
Global modular standard lubricator	P33LA

Thread type	
BSPP	**1**
BSPT	2
NPT	**9**

Port size	
1/2	**4**
3/4	**6**

Lube type	
Oil mist standard sight dome	L

Bowl type	
G	**Poly bowl with bowl guard**
S	**Metal bowl with sight gauge**

Drain type	
N	**No drain closed end**

Mounting	
N	**No bracket**

Bold items are most common.

Port size	Description	Flow‡ dm^3/s (scfm)	Max. bar (psig)	Height mm (inches)	Width mm (inches)	Depth mm (inches)	Part number†
1/2"	Poly bowl - No drain	52 (110)	10 (150)	234 (9.21)	73 (2.9)	73 (2.9)	**P33LA94LGNN**
1/2"	Metal bowl - No drain	52 (110)	17 (250)	234 (9.21)	73 (2.9)	73 (2.9)	**P33LA94LSNN**
3/4"	Poly bowl - No drain	71 (150)	10 (150)	234 (9.21)	73 (2.9)	73 (2.9)	**P33LA96LGNN**
3/4"	Metal bowl - No drain	71 (150)	17 (250)	234 (9.21)	73 (2.9)	73 (2.9)	**P33LA96LSNN**

† **Standard part numbers shown in bold. For other models refer to Options chart above.**
‡ Flow with 6.3 bar (91.3 psig) inlet pressure and 0.34 bar (4.9 psig) pressure drop.

Parker Hannifin Corporation
Pneumatic Division
Richland, Michigan
www.parker.com/globalfrl

Specifications

Flow capacity*	1/2	52 dm³/s (110 scfm)
	3/4	71 dm³/s (150 scfm)
Operating temperature	Plastic bowl	-10°C to 52°C (14°F to 125°F)
	Metal Bowl	-10°C to 65.5°C (14°F to 150°F)
Max. supply pressure	Plastic bowl	10 bar (150 psig)
	Metal bowl	17 bar (250 psig)
Useful retention		181 cm³ (6.1 US oz.)
Port size	BSPP / BSPT / NPT	1/2, 3/4
Weight		0.47 kg (1.04 lbs)

* Inlet pressure 6.3 bar (91.3 psig). Pressure drop 0.34 bar (4.9 psig).

Material Specifications

Body		Aluminum
Body cap		ABS
Bowls	Plastic bowl	Polycarbonate
	Metal bowl	Aluminum
Seals		Nitrile
Sight dome		Polycarbonate
Sight gauge	Metal bowl	Nylon
Suggested lubricant		ISO / ASTM VG32
Pick-up filter		Sintered bronze

Flow Charts

1/2 Lubricator

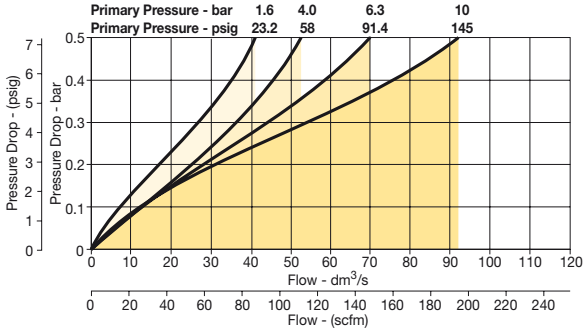

3/4 Lubricator

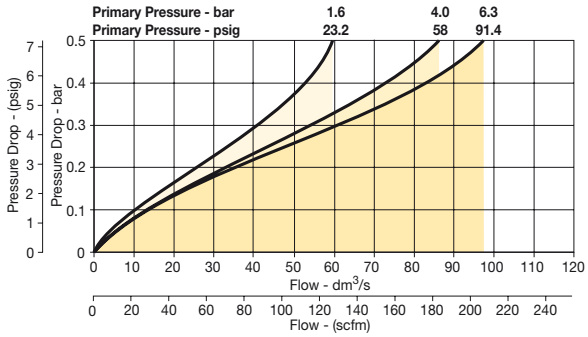

Dimensions mm (inches)

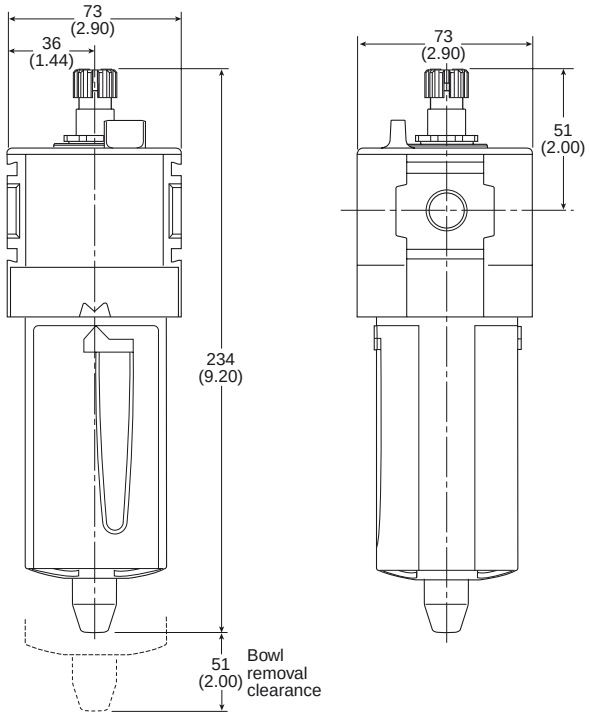

Repair and Service Kits

Plastic bowl / Bowl guard no drain	**P33KA00BGN**
Metal bowl / w/o sight gauge no drain	**P33KA00BMN**
Metal bowl / Sight gauge no drain	**P33KA00BSN**
Drip control assembly	**P32KA00PG**
Fill plug	**P32KA00PL**
L-bracket (fits to body)	**P33KA00ML**
T-bracket (fits to body connector)	**P32KA00MB**
T-bracket with body connector	**P32KA00MT**
Body connector	**P32KA00CB**

Suggested Lubricant ..... **F442 Oil**

Petroleum based oil of 100 to 200 SUS viscosity at 38°C (100°F) and an aniline point greater than 93°C (200°F) (DO NOT USE OILS WITH ADDITIVES, COMPOUNDED OILS CONTAINING SOLVENTS, GRAPHITE, DETERGENTS, OR SYNTHETIC OILS.)

Parker Hannifin Corporation
Pneumatic Division
Richland, Michigan
www.parker.com/globalfrl

Proportional Regulators - P31P & P32P

P31P Series
Bottom exhaust

P32P Series
Bottom exhaust

- Very fast response times
- Accurate output pressure
- Micro parameter settings
- Selectable I/O parameters
- Quick, full flow exhaust
- LED display indicates output pressure
- No air consumption in steady state
- Multiple mounting options
- Protection to IP65
- P31P flows to 19 dm3/s (40 scfm)
- P32P flows to 57 dm3/s (120 scfm)

Options:

P31PA 9 2 A D 2 V D 1 ☐

Body size	
Global modular mini (1/4")	P31PA
Global modular compact (1/2")	P32PA

Thread type	
BSPP	**1**
BSPT	2
NPT	**9**

Port size	
Global modular mini (1/4")	2
Global modular compact (1/2")	4

Version	
Bottom ported exhaust (NC)	A
Bottom ported forced exhaust (NO)†	E

† When the supply voltage is lost the unit will automatically exhaust the regulated pressure to 0 bar (atmospheric pressure)

Pressure range	
Z	0 - 2 bar (0-29 PSIG)
D	0 - 10 bar (0-145 PSIG)

Power supply	
2	24 volts

Control signal	
V	0-10V‡

‡ Factory setting is 0-10 V control signal. 4-20 mA control signal available via parameter 4 on keypad.

Input connector	
1	M12 (4-pin)

Output signal	
D	Digital, PNP
P	PNP or 0-10V
N	NPN or 0-10V
M	4-20mA fixed

D) Digital PNP output only, no analog output selectable
P) Digital PNP and analogue 0-10V outputs selectable, by means of parameter 6. (Factory default 0-10V)
N) Digital NPN and analog 0-10 V outputs selectable by means of parameter 6. Factory default 0-10V)
M) Analog 4-20mA output only.
Note: On all analog outputs the F.S. value can be adjusted by means of parameter 8.

Bold items are most common.

P31P Mounting brackets

Description	Part number
L-Bracket mounting kit	**P3HKA00ML**
Foot bracket mounting kit	**P3HKA00MC**

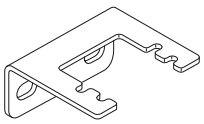

L-Bracket

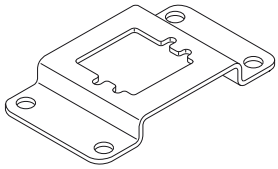

Foot Bracket

P32P Mounting brackets

Description	Part number
L-Bracket mounting kit	**P3KKA00ML**
Foot bracket mounting kit	**P3KKA00MC**

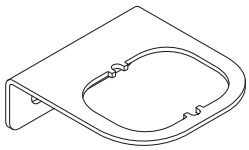

L-Bracket

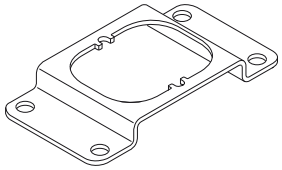

Foot Bracket

Cables

Description	Part number
2 mtr. cable with moulded straight M12x1 connector	**CB-M12-4P-2M**

Parker Hannifin Corporation
Pneumatic Division
Richland, Michigan
www.parker.com/globalfrl

Technical Information

Working medium
Compressed air or inert gasses, filtered to 40µ.

Supply pressure

Max. Operating Pressure:
2 bar unit: ..... 3 bar (43.5 psig)
10 bar unit: ..... 10.5 bar (152 psig)
Min. Operating Pressure ..... P2 Pressure + 0.5 bar (7.3 psig)

Pressure control range
Available in three pressure ranges, 0-2 bar (0-29 psig), 0-7 bar (0-101.5 psig) or 0-10 bar (0-145 psig). Pressure range can be changed through the software at all times.
(parameter 19)

Temperature range
0°C up to +50°C (32°F up to 122°F)

Weights:
P31P = 0.291 kg (0.64 lbs)
P32P = 0.645 kg (1.42 lbs)

Air consumption
No consumption in stable regulated situation.

Display
The regulator is provided with a digital display, indicating the output pressure, either in bar or psig.
The factory setting is as indicated on the label, can be changed through to software at all times (parameter 14)

Supply voltage
24 VDC +/- 10%

Power consumption
Max. 1.1W with unloaded signal outputs

Control signals
The electronic pressure regulator can be externally controlled through an analogue control signal of either
0-10V or 4-20mA. (parameter 4).

Output signals
As soon as the output pressure is within the signal band a signal is given of 24VDC, PNP Ri = 1 kOhm
Outside the signal band this connection is 0V.

Connections
(In case of output signal (Option D)
Central M12 connector 4-pole
The electrical connections are as follows:

Pin No.		Function	Color
1	24 V	Supply	Brown
2	0 to 10 V	Control Signal Ri = 100k Ω	White
	4 to 20mA	Control Signal Ri = 500 Ω	
3	0 V (GND)	Supply	Blue
4	24 V	Alarm Output Signal	Black

Schematic

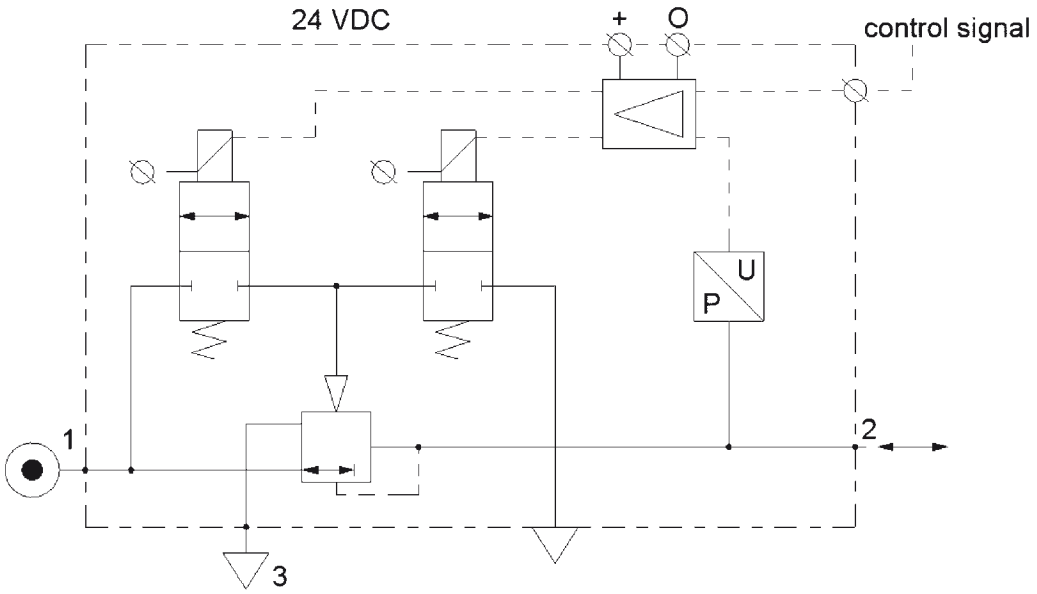

Parker Hannifin Corporation
Pneumatic Division
Richland, Michigan
www.parker.com/globalfrl

Technical information

Dead band
The dead band is preset at 1.3% of Full Scale*, adjustable via parameter 13.

Accuracy
Linearity: = < 0.3% of Full Scale.*

Proportional band
The proportional band is preset at 10% of Full Scale.*

Fail safe operation

- If the P31P / P32P unit has an “0” or “A” in the 12th digit of the model number
  - When the supply voltage drops, the electronic control reverts to the fail safe mode. The last known output pressure is maintained at approximately the same level depending upon air consumption. The digital display indicates the last known pressure setting.
  - When the supply voltage is reinstated to the correct level, the valve moves from the fail safe mode and the output pressure immediately follows the control signal requirement. The display indicates the actual output pressure.
  - Note: In the event of loss of both power and inlet pressure the unit will exhaust downstream pressure.
- If the P31P / P32P unit has an “E” in the 12th digit of the model number
  - When the supply voltage drops, the electronic control reverts to “Forced Exhaust Mode” and will automatically exhaust the downstream (regulated) pressure.
  - When the supply voltage is reinstated to the correct level the unit will return to normal operation and follows the control signal requirement. The display indicates the actual pressure.
- If the unit has been programmed in manual mode (not with a control signal) the unit will EXHAUST and the regulator will need to be reset when power is applied.

Full exhaust
Complete exhaust of the regulator is defined as
P2 ≤ 1% Full Scale

*** Full scale (F.S.)**
For 2 bar (29 psig) versions this will be 2 bar (29 psig), for the 10 bar (145 psig) version full scale will be 10 bar (145 psig).

Degree of protection
IP65

EU conformity
CE: standard
EMC: according to directive 89/336/EEC
The new pressure regulator is in accordance with:

EN 61000-6-1:2001 **EN 61000-6-2:2001**
EN 61000-6-3:2001 **EN 61000-6-4:2001**

These standards ensure that this unit meets the highest level of EMC protection.

Mounting position
Preferably vertical, with the cable gland on top.

Materials: P31P & P32P

- Magnet Core ..... Steel
- Solenoid Valve Poppet ..... FPM
- Solenoid Valve Housing ..... Techno Polymer
- Regulator Body (P31P & P32P versions) ..... Aluminum
- Regulator Top Housing ..... Nylon
- Valve Head ..... Brass & NBR
- Remaining Seals ..... NBR

Advanced functionality

Pilot valve protection
When the required output pressure can not be achieved because of a lack of input pressure the unit will open fully and will display NoP. Approximately every 10 seconds the unit will retry. The output pressure will then be approximately equal to the inlet pressure. As soon as the input pressure is back on the required level, the normal control function follows.

Safety exhaust
Should the **control signal** fall below 0.1 volts the valve will automatically dump downstream system pressure .

Input protection
The unit has built-in protection against failure and burnout resulting from incorrect input value, typically:

The 24VDC supply is incorrectly connected to the setpoint input, the display will show ‘OL’, as an overload indication. The unit will need to be rewired and when correctly connected will operate normally.

The overload indicator ‘OL’ will also appear should the wrong input value be applied or the wrong input value be programmed: 4 - 20m instead of 0 - 10V. To correct this a different set point value should be input or the unit reprogrammed to correct the set point value acceptance. (via parameter 4).

Response time	P31P	P32P
2 to 4 bar	25 msecs	35 msecs
1 to 6 bar	55 msecs	135 msecs
4 to 2 bar	70 msecs	85 msecs
6 to 1 bar	80 msecs	225 msecs

To fill volume of:
100cm³ - P31P
330cm³ - P32P
connected to the outlet of the regulator.

Settings
The regulator is pre-set at the factory. If required, adjustments can be made.

Flow Charts

P31P Regulator 1/4” Ports

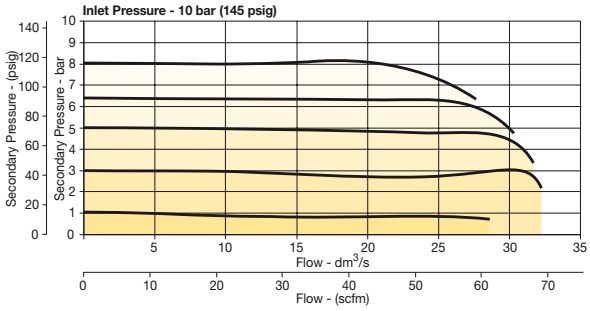

P32P Regulator 1/2” Ports

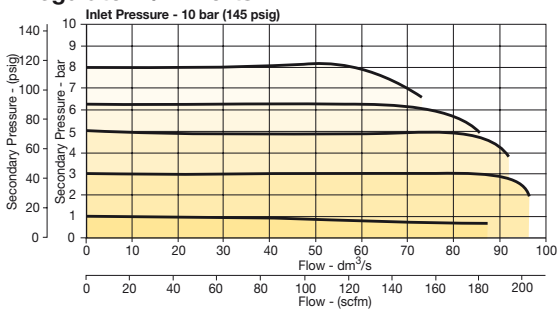

Parker Hannifin Corporation
Pneumatic Division
Richland, Michigan
www.parker.com/globalfrl

How to change parameters

Pressing the Accept key “acc” for more than 3 seconds, will activate parameter change mode. The user can then select the parameters by pressing up or down key (display will show Pxx). When parameter number is correct, pressing accept again will enter parameter number (display will show parameter value).

Pressing the up or down key will change the parameter itself (display will flash indicating parameter editing mode). Pressing the accept key will accept the new parameter value (all digits will flash whilst being accepted).

After releasing all keys, the next parameter number will be presented on the display (you may step to the next parameter). When no key is pressed, after 3 seconds the display will show the actual output pressure.

When the unit is initially powered up allow approximately 10 seconds for the unit to “boot-up” before changing parameter settings.

Only parameter numbers 0, 4, 6, 8, 9, 14, 18, 19, 20, 12, 13 and 21 are accessible to edit. All other parameters are fixed.

Manual mode:

When keys DOWN and UP are pressed during startup, (connecting to the 24V power supply) manual mode is activated. This means that the user is able to in/decrease the output pressure of the regulator, by pressing the UP or DOWN key. During this action the display will blink, indicating that the manual mode is activated. After powering up again, the unit will revert back to normal mode.

Back to Factory Setting

After start up. (Power is on)
Entering this value in parameter 0 will store the calibrated factory data into the working parameters.
(Default calibration data is used)

Parameter Number 0 – Reset Back to Factory Settings

Step	1	2	3	4	5	
Press	acc 3-6 seconds	▼ or ▲	acc	▼ or ▲	acc	
Until Display Reads	Pxx	P00	000. Flashing Decimal	003. Flashing Decimal	003 Flashing	P01
Description	Accesses changeable parameters.	Accesses parameter no. 0.	Displays current parameter value.	Edits parameter. 3 = standard factory settings. If other than 3, use Up or Down Arrow and accept 3	Accepts and saves new parameter setting.	Sequences to next parameter.

Set Control Signal

The unit is factory set for 0-10 V control signal. If 4-20 mA control signal is required, change parameter 4.

Parameter Number 4 – Set Control Signal in Volts or Milliamps

Step	1	2	3	4	5	
Press	acc 3-6 seconds	▼ or ▲	acc	▼ or ▲	acc	
Until Display Reads	Pxx	P04	001. Flashing Decimal	000. Flashing Decimal	000 Flashing	P05
Description	Accesses changeable parameters.	Accesses parameter no. 4.	Displays current parameter value. 1 = V 0 = mA	Edits parameter.	Accepts and saves new parameter setting.	Sequences to next parameter.

Parker Hannifin Corporation
Pneumatic Division
Richland, Michigan
www.parker.com/globalfrl

Set Output Signal

Parameter 6 is used to set the type of output signal to your PLC.
This parameter is used as follows:
Output Signal option “0” = Digital Output – PNP

- Factory set at “0” Non Adjustable

Output Signal option “P” = Digital PNP or Analog 1-10V

- Factory set at “1” for Analog Signal
- Convert to Digital PNP by changing parameter to “0” setting

Output Signal option “N” = Digital NPN or Analog 1-10V

- Factory set at “1” Analog Signal
- Convert to Digital NPN by changing parameter to “0”

Output Signal option “M” = Analog 4-20 mA

- Factory set at “2” Non Adjustable

Parameter Number 6 – Set Output Signal

Step	1	2	3	4	5	
Press	acc 3-6 seconds	▼ or ▲	acc	▼ or ▲	acc	
Until Display Reads	Pxx	P06	001.	###.	###.	P07
			Flashing Decimal	Flashing Decimal (Value 0, 1 or 2)	Flashing	
Description	Accesses changeable parameters.	Accesses parameter no. 6.	Displays current parameter value. 1 = m factory default for P3H with analog options	Edits parameter. 0 = digital (NPN or PNP) 1 = analog 0..10V 2 = analog 4..20 mA	Accepts and saves new parameter setting.	Sequences to next parameter.

Adjust Span Analog Output Signal

Set value is a % of Full Analog range. As an example for a 0-10V output signal, the original factory setting of 100% will give you an adjustment of 0-10V. If you reset Parameter 8 to 50%, the new output range would be 0-5V or 50% of the full range.

In the event that the output signal is to low, in a certain application, you can adjust it by increasing Parameter 8 to a maximum value of 130% of scale.

Note that all values are nominal and that an actual measurement may be required to ensure signal strength.

Parameter Number 8 – Adjust Span Analog Output Signal

Step	1	2	3	4	5	
Press	acc 3-6 seconds	▼ or ▲	acc	▼ or ▲	acc	
Until Display Reads	Pxx	P08	100.	###.	###.	P09
			Flashing Decimal (For 2 bar versions value = 92)	Flashing Decimal (Value between 0 and 130)	Flashing	
Description	Accesses changeable parameters.	Accesses parameter no. 8.	Displays current parameter value.	Edits parameter.	Accepts and saves new parameter setting and implements the new analog signal span.	Sequences to next parameter.

Parker Hannifin Corporation
Pneumatic Division
Richland, Michigan
www.parker.com/globalfrl

Adjust Digital Display

If necessary, adjustments can be made to the digital display when using an external pressure sensor.

Parameter Number 9 – Adjust Digital Display Value (Pressure Calibration)

Step	1	2	3	4	5	
Press	acc 3-6 seconds	▼ or ▲	acc	▼ or ▲	acc	
Until Display Reads	Pxx	P09	###. Flashing Decimal	###. Flashing Decimal	### Flashing	P 10
Description	Accesses changeable parameters.	Accesses parameter no. 9.	Displays current digital display	Use up or down arrows and accept to adjust the display value if using an external pressure sensor.	Accepts and saves new parameter setting.	Sequences to next parameter.

Set Pressure Scale

Units with NPT port threads are supplied with a factory set psig pressure scale. Use parameter 14 to change scale to bar.

Parameter Number 14 – Set Pressure Scale in psig or bar

Step	1	2	3	4	5	
Press	acc 3-6 seconds	▼ or ▲	acc	▼ or ▲	acc	
Until Display Reads	Pxx	P 14	001. Flashing Decimal	000. Flashing Decimal	000 Flashing	P 15
Description	Accesses changeable parameters.	Accesses parameter no. 14.	Displays current parameter value. 1 = psig 0 = bar 2 = MPa	Edits parameter.	Accepts and saves new parameter setting.	Sequences to next parameter.

Parker Hannifin Corporation
Pneumatic Division
Richland, Michigan
www.parker.com/globalfrl

Preset Minimum Pressure

If there is a need for a pre-set Minimum pressure, use parameter 18. (Note: preset pressure is affected by % P19.)

Parameter Number 18 – Set Minimum Preset Pressure

Step	1	2	3	4	5	
Press	acc 3-6 seconds	▼ or ▲	acc	▼ or ▲	acc	
Until Display Reads	Pxx	P 18	000.	###. Flashing Decimal (value between 0 and 200)	### Flashing	P 19
Description	Accesses changeable parameters.	Accesses parameter no. 18.	Displays current parameter value. Incremental value is: 2 bar unit: x 2 mbar x % P19 10 bar unit: x 10 mbar x % P19	Edits parameter.	Accepts and saves new parameter setting.	Sequences to next parameter.

Set Pressure Correction

Pressure correction allows the user to set a Maximum pressure as a percentage of secondary pressure F.S.
Example: If F.S. is 10 bar, set parameter 19 to 50 for Maximum preset pressure of 5 bar.
Pressure correction also affects the Minimum preset pressure in parameter 18.
Example: If F.S. is 10 bar and parameter 18 is set to a value of 100 (1 bar), and parameter 19 is set to 50%, then the actual Minimum preset pressure seen is 0.5 bar.

Parameter Number 19 – Set Maximum Preset Pressure

Step	1	2	3	4	5	
Press	acc 3-6 seconds	▼ or ▲	acc	▼ or ▲	acc	
Until Display Reads	Pxx	P 19	100.	###. Flashing Decimal (value between 0 and 100)	### Flashing	P20
Description	Accesses changeable parameters.	Accesses parameter no. 19.	Displays current parameter value. Incremental value is: % of F.S.	Edits parameter.	Accepts and saves new parameter setting.	Sequences to next parameter.

Parker Hannifin Corporation
Pneumatic Division
Richland, Michigan
www.parker.com/globalfrl

Behavior Control

The regulation speed of the pressure regulator can be modified by means of one parameter. (P 20)
The value in this parameter has a range from 0-5. A higher value indicates slower regulation speed, but will be more stable.

Parameter Number 20 – Set Behavior Control

Step	1	2	3	4	5	
Press	acc 3-6 seconds	▼ or ▲	acc	▼ or ▲	acc	
Until Display Reads	Pxx	P20	003.	###. Flashing Decimal (value between 0 and 5)	### Flashing	P21
Description	Accesses changeable parameters.	Accesses parameter no. 20.	Displays current parameter value.	Edits parameter 0 = custom set* 1 = fastest (narrow proportional band) 2 = fast 3 = normal 4 = slow 5 = slowest (proportional band is broad)	Accepts and saves new parameter setting.	Sequences to next parameter.

* When the value 0 is entered, you are able to create your own custom settings true parameters 12, 13 and 21.

Fine Settings

Set Proportional Band

Proportional band is used for setting the reaction sensitivity of the regulator. The displayed value is X 10 mbar and has a range between 50 (0.5 bar) and 250 (2.5 bar).

Parameter Number 12 – Set Proportional Band (P20 Must be Set to 0)

Step	1	2	3	4	5	
Press	acc 3-6 seconds	▼ or ▲	acc	▼ or ▲	acc	
Until Display Reads	Pxx	P12	100. Flashing Decimal	###. Flashing Decimal (value between 50 and 250)	### Flashing	P13
Description	Accesses changeable parameters.	Accesses parameter no. 12.	Displays current parameter value. Incremental value is: x 10 mbar	Edits parameter.	Accepts and saves new parameter setting.	Sequences to next parameter.

Parker Hannifin Corporation
Pneumatic Division
Richland, Michigan
www.parker.com/globalfrl

Set Deadband

Deadband is the Minimum limit of accuracy at which the regulator is set for normal operation. The displayed value is X 10 mbar and has a range between 4 (40 mbar) and 40 (400 mbar).

Parameter Number 13 – Set Deadband (P20 Must be Set to 0)

Step	1	2	3	4	5	
Press	acc 3-6 seconds	▼ or ▲	acc	▼ or ▲	acc	
Until Display Reads	Pxx	P13	015. Flashing Decimal	###. Flashing Decimal (value between 4 and 40)	### Flashing	P14
Description	Accesses changeable parameters.	Accesses parameter no. 13.	Displays current parameter value. Incremental value is x 10 mbar	Edits parameter.	Accepts and saves new parameter setting.	Sequences to next parameter.

Proportional Effect

Parameter Number 21 – Set Proportional Effect (P20 Must be Set to 0)

Step	1	2	3	4	5	
Press	acc 3-6 seconds	▼ or ▲	acc	▼ or ▲	acc	
Until Display Reads	Pxx	P21	010. Flashing Decimal	###. Flashing Decimal (value between 5 and 100)	### Flashing	P22
Description	Accesses changeable parameters.	Accesses parameter no. 21.	Displays current parameter value.	Edits parameter. 5 = fastest regulation 100 = slowest regulation.	Accepts and saves new parameter setting.	Sequences to next parameter.

Parameter Number 39 – Displays Current Software Version

Step	1	2	3	
Press	acc 3-6 seconds	▼ or ▲	acc	
Until Display Reads	Pxx	P39	### Flashing Decimal	
Description	Accesses changeable parameters.	Accesses parameter no. 39.	Displays current parameter value. XXX = current software version	

Parker Hannifin Corporation
Pneumatic Division
Richland, Michigan
www.parker.com/globalfrl

P31P

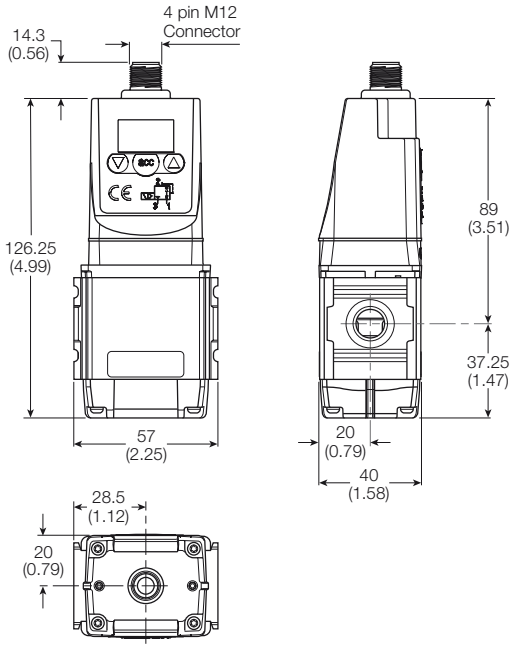

P32P

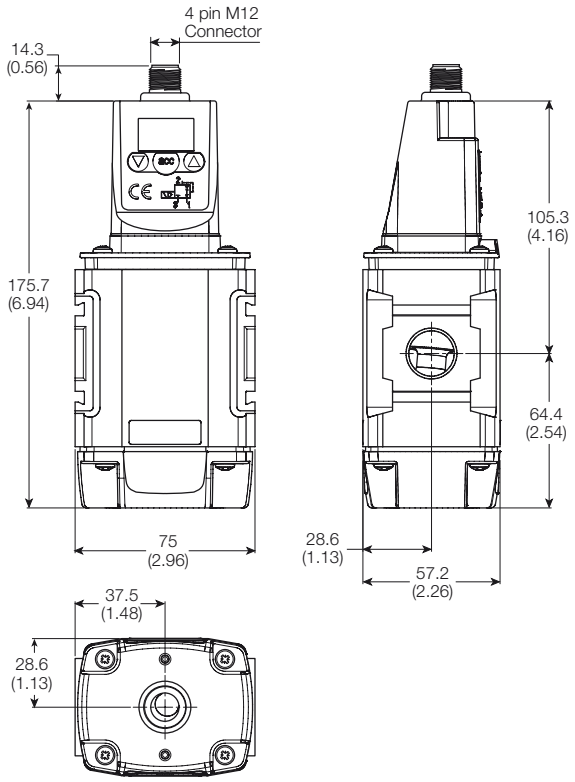

L-Bracket

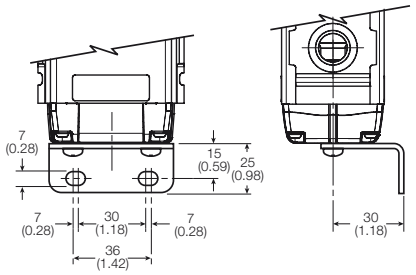

L-Bracket

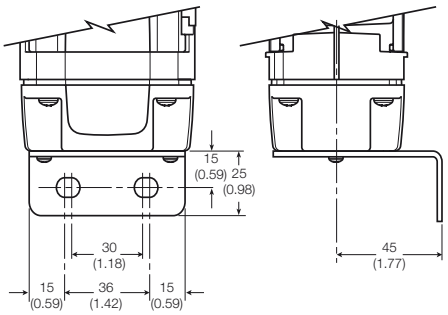

Foot Bracket

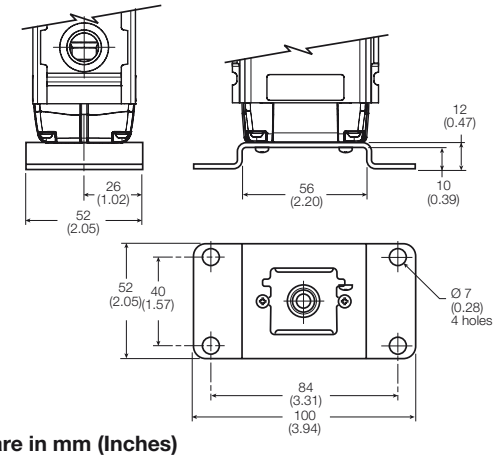

Foot Bracket

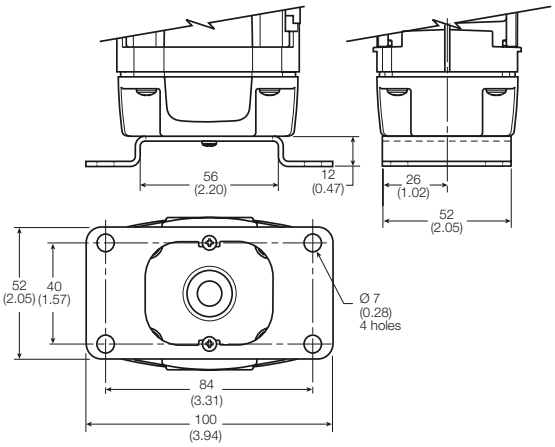

Dimensions are in mm (Inches)

Parker Hannifin Corporation
Pneumatic Division
Richland, Michigan
www.parker.com/globalfrl

Dump Valve

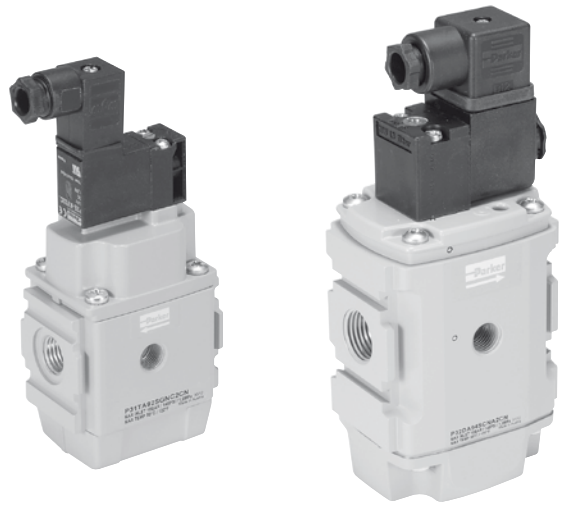

Symbol

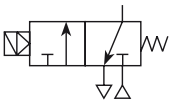

- Modular design with 1/4" or 1/2" integral ports (NPT, BSPP & BSPT)
- The 3-way, 2-position function automatically dumps downstream pressure on the loss of pilot signal
- Solenoid or air pilot options
- High flow & exhaust capability
- Silencer included

Remotely operated dump valves automatically shut off upstream pressure and exhaust the downstream pressure when the pilot pressure is released.

To maintain these units in the open position a pilot supply to the air pilot operated version or an electrical signal to the solenoid operated version must be maintained. The valve will automatically dump when the holding signal is removed.

Options:

P31DA 9 2 S G N C 2CN

Solenoid type only

Body size	
Dump valve (1/4")	P31DA
Dump valve (1/2")	P32DA

Thread type	
BSPP	1
BSPT	2
NPT	9

Port size	
Global modular mini (1/4")	2
Global modular compact (1/2")	4

Pilot type	
P	External air pilot
S	Solenoid pilot

Actuator interface	
G	15mm solenoid (P31 only)
C	30mm solenoid

Solenoid type	
C	15mm (P31 series only)
A	30mm CNOMO coil (P32 only)
D	30mm CNOMO coil (M12 connection) (P32 only)

Solenoid voltage	
2CN	24VDC non locking manual overide
3GN	120VAC non locking manual overide
1FN	120VAC non locking manual override (P31 series only)

Note:
P32 unit used for both P32 & P33 series
Bold items are most common.

Port size	Description	Flow dm^3/s (scfm)	Max. bar (psig)	Height mm (inches)	Width mm (inches)	Depth mm (inches)	Weight kg (lbs)	Part number†
1/4"	120VAC Solenoid & cable plug	17 (36)	10 (150)	115.6 (4.5)	57 (2.2)	40 (1.5)	0.37 (0.8)	**P31DA92SGNC1FN**
1/4"	24VDC Solenoid & cable plug	17 (36)	10 (150)	166‡ (6.5)	57 (2.2)	40 (1.5)	0.41 (0.9)	**P31DA92SGNC2CN**
1/4"	External air pilot operated	17 (36)	17 (250)	115.6 (4.5)	57 (2.2)	40 (1.5)	0.37 (0.8)	**P31DA92PPN**
1/2"	120VAC 30mm coil & cable plug incl.	51 (108)	10 (150)	162.5‡ (6.3)	75 (2.9)	57.2 (2.2)	0.69 (1.5)	**P32DA94SCNA3GN**
1/2"	24VDC 30mm coil & cable plug incl.	51 (108)	10 (150)	227.5‡ (8.9)	75 (2.9)	57.2 (2.2)	0.91 (2.0)	**P32DA94SCNA2CN**
1/2"	External air pilot operated	51 (108)	17 (250)	162.5‡ (6.3)	75 (2.9)	57.2 (2.2)	0.87 (1.9)	**P32DA94PPN**

‡ Includes exhaust silencer
† **Standard part numbers shown in bold. For other models refer to Options chart above.**

Parker Hannifin Corporation
Pneumatic Division
Richland, Michigan
www.parker.com/globalfrl

Technical Information

Fluid:		Compressed air
Max. pressure solenoid operated:		10 bar (150 psig)
Max. pressure air pilot operated:		17 bar (250 psig)
Min. operating pressure:		3 bar (44 psig)
Temperature Max.* solenoid operated:		-10°C to 50°C (14°F to 122°F)
Temperature Max.* air pilot operated:		-20°C to 80°C (-4°F to 176°F)
Air pilot port:		1/8"
Exhaust port:		**P31D** - 1/4" / **P32D** - 1/2"
Gauge port:		**P31D** - 1/8" / **P32D** - 1/4"
Typical flow with 6.3 bar inlet pressure and 1 bar pressure drop:	**P31D**	17 dm^3/s (36 scfm)
	P32D	51 dm^3/s (108 scfm)

* Air supply must be dry enough to avoid ice formation at temperatures below +2°C
Snap pressure: Full flow when downstream pressure reaches 50% of the inlet pressure

Material Specifications

Body:	Aluminum
Body cover:	Polyester
Seals:	Nitrile NBR

Mounting Brackets

Description	Part number **P31D**
L-bracket mounting kit	**P3HKA00ML**
Foot bracket mounting kit	**P3HKA00MC**

Note:
For solenoid operators and cable plugs (connectors) see pages 76 to 77.

Flow Charts

P31DA 1/4" Remote Dump Valve

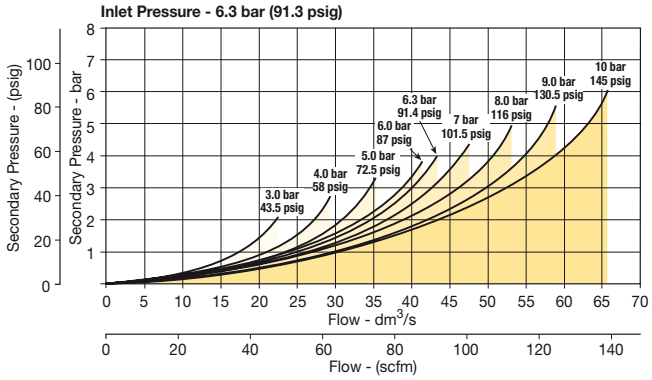

P32DA 1/2" Remote Dump Valve

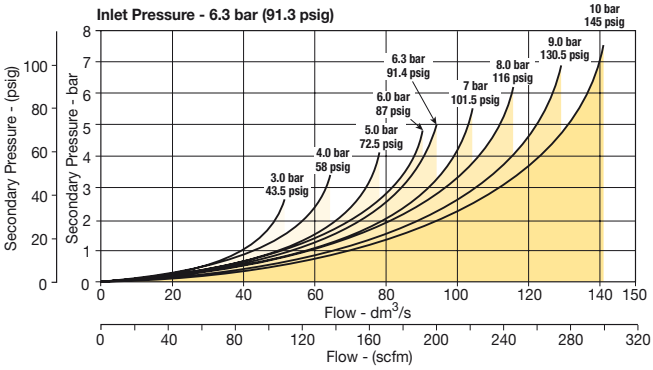

Dimensions mm (inches)

P31D

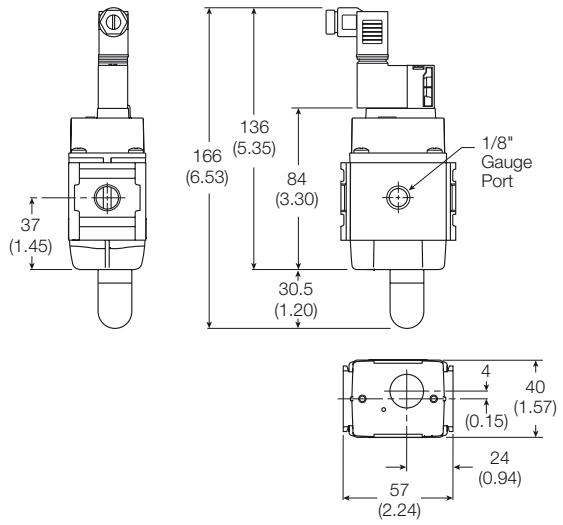

P32D

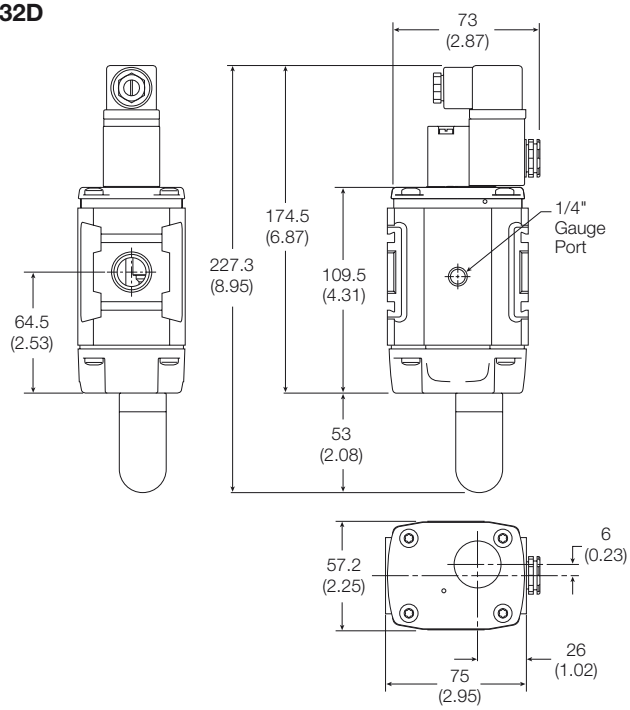

For mounting brackets see page 56.

Parker Hannifin Corporation
Pneumatic Division
Richland, Michigan
www.parker.com/globalfrl

Soft Start Valve

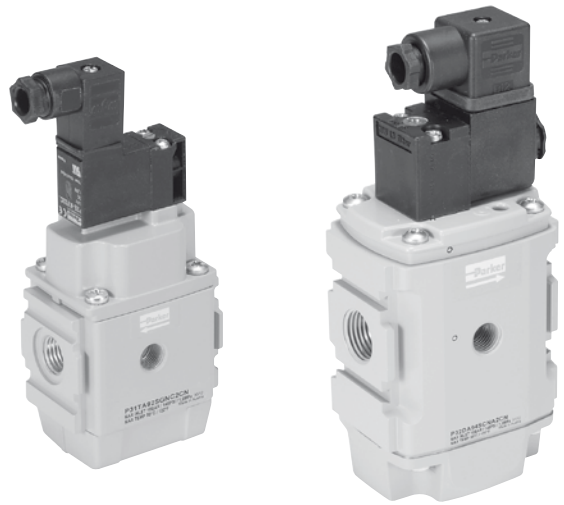

Symbol

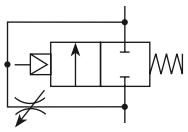

- Modular design with 1/4" or 1/2" integral ports (NPT, BSPP & BSPT)
- The 2-way, 2-position function provides for the safe introduction of pressure
- Adjustable slow start
- Solenoid or air pilot options
- High flow

Parker Global Series Soft Start Valves, provide for the safe introduction of pressure to machines or systems. Soft Start Valves, allow the pressure to gradually build to the set point before fully opening to deliver full flow at line pressure.

The controlled introduction of pressure can be an important safety factor and prevent damage to tooling when air pressure is introduced at machine or system start up.

Note: Soft Start Valves must be installed downstream of a 3/2 valve with exhaust capability

Options:

P31SA 9 2 S G N — **C 2CN** (Solenoid type only)

Body size	
Soft start	P31SA
Soft start	P32SA

Thread type	
BSPP	1
BSPT	2
NPT	9

Port size	
Global modular mini (1/4")	2
Global modular compact (1/2")	4

Pilot type	
P	External air pilot
S	Solenoid pilot
Y	Internal air pilot

Actuator interface	
0	Internal Pilot
G	15mm solenoid (P31 only)
C	30mm solenoid
P*	Threaded air pilot

Solenoid type	
C	15mm (P31 series only)
A	30mm CNOMO coil (P32 only)
D	30mm CNOMO coil (M12 connection) (P32 only)

Solenoid voltage	
2CN	24VDC non locking manual overide
3GN	120VAC non locking manual overide
1FN	120VAC non locking manual override (P31 series only)

Note:
P32 unit used for both P32 & P33 series
Bold items are most common.

Port size	Description	Flow dm^3/s (scfm)	Max. bar (psig)	Height mm (inches)	Width mm (inches)	Depth mm (inches)	Weight kg (lbs)	Part number†
1/4"	120VAC Solenoid & cable plug	17 (36)	10 (150)	115.6 (4.5)	57 (2.2)	40 (1.5)	0.37 (0.8)	**P31SA92SGNC1FN**
1/4"	24VDC Solenoid & cable plug	17 (36)	10 (150)	166.0 (6.5)	57 (2.2)	40 (1.5)	0.41 (0.9)	**P31SA92SGNC2CN**
1/4"	Internal air pilot operated	17 (36)	17 (250)	115.6 (4.5)	57 (2.2)	40 (1.5)	0.37 (0.8)	**P31SA92Y0N**
1/4"	External air pilot (1/8" threaded)	17 (36)	17 (250)	115.6 (4.5)	57 (2.2)	40 (1.5)	0.37 (0.8)	**P31SA92PPN**
1/2"	120VAC 30mm coil & cable plug incl.	48 (101)	10 (150)	162.5 (6.3)	88 (3.4)	57.2 (2.28)	0.87 (1.5)	**P32SA94SCNA3GN**
1/2"	24VDC 30mm coil & cable plug	48 (101)	10 (150)	227.5 (8.9)	88 (3.4)	57.2 (2.28)	0.90 (2.0)	**P32SA94SCNA2CN**
1/2"	Internal air pilot operated	48 (101)	17 (250)	162.5 (6.3)	75 (2.9)	57.2 (2.28)	0.90 (2.0)	**P32SA94Y0N**
1/2"	External air pilot (1/8 threaded)	48 (101)	17 (250)	162.5 (6.3)	75 (2.9)	57.2 (2.28)	0.87 (1.5)	**P32SA94PPN**

† **Standard part numbers shown in bold. For other models refer to Options chart above.**

Parker Hannifin Corporation
Pneumatic Division
Richland, Michigan
www.parker.com/globalfrl

Technical Information

Fluid:		Compressed air
Max. pressure solenoid operated:		10 bar (150 psig)
Max. pressure air pilot operated:		17 bar (250 psig)
Min. operating pressure:		3 bar (44 psig)
Temperature Max.* solenoid operated:		-10°C to 50°C (14°F to 122°F)
Temperature Max.* air pilot operated:		-20°C to 80°C (-4°F to 176°F)
Air pilot port:		1/8"
Gauge port:		**P31S** - 1/8" / **P32S** - 1/4"
Typical flow with 6.3 bar inlet pressure and 1 bar pressure drop:	**P31S**	17 dm^3/s (36 scfm)
	P32S	48 dm^3/s (101 scfm)

* Air supply must be dry enough to avoid ice formation at temperatures below +2°C
Snap pressure: Full flow when downstream pressure reaches 50% of the inlet pressure

Material Specifications

Body:	Aluminum
Body cover:	Polyester
Seals:	Nitrile NBR

Mounting Brackets

Description	Part number **P31S**
L-bracket mounting kit	**P3HKA00ML**
Foot bracket mounting kit	**P3HKA00MC**

Note:
For solenoid operators and cable plugs (connectors) see pages 76 to 77.

Flow Charts

P31SA 1/4" Soft Start Valve

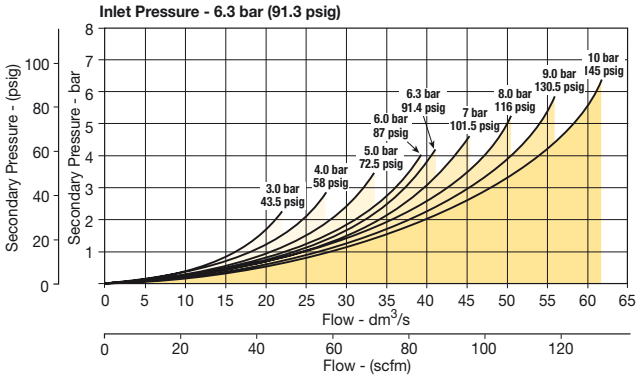

P32SA 1/2" Soft Start Valve

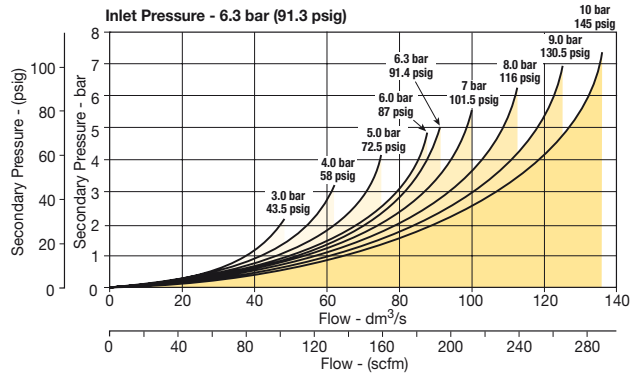

Dimensions mm (inches)

P31S

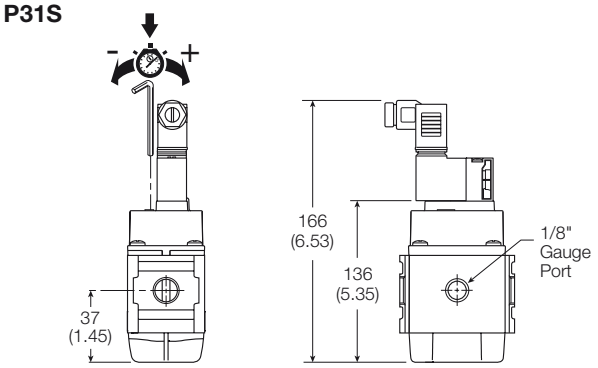

P32S

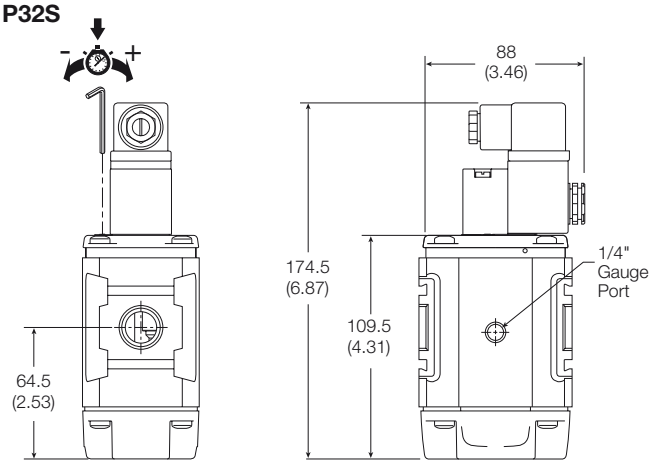

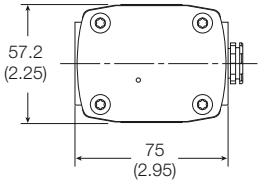

Soft Start Function:

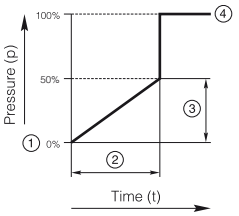

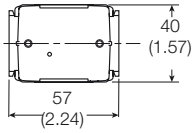

① Start signal
② Switching time delay
③ Gradual pressure build up
④ Operating pressure p^2 (=p^1)

For mounting brackets see page 56.

Parker Hannifin Corporation
Pneumatic Division
Richland, Michigan
www.parker.com/globalfrl

Combined Soft Start / Dump Valve

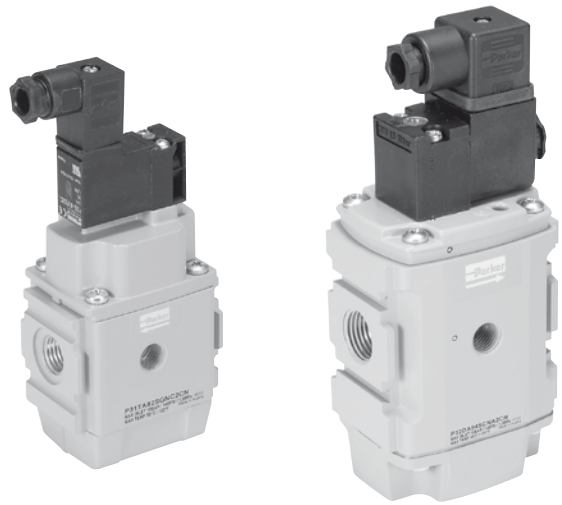

Symbol

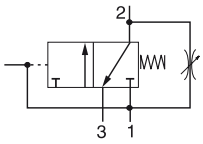

- Modular design with 1/4" or 1/2" integral ports (NPT, BSPP & BSPT)
- Provides for the safe introduction of pressure
- The 3-way, 2-position function automatically dumps downstream pressure on the loss of pilot signal
- Adjustable slow start
- Solenoid or air pilot options
- High flow & exhaust capability
- Silencer included

Parker Global Series Combined Soft Start / Dump Valves, provide for the safe introduction of pressure to machines or systems. Soft Start / Dump Valves when set, allow the pressure to gradually build to the set point before fully opening to deliver full flow at line pressure.

The controlled introduction of pressure can be an important safety factor and prevent damage to tooling when air pressure is introduced at machine or system start up.

To maintain these units in the open position a pilot supply to the air pilot operated version or an electrical signal to the solenoid operated version must be maintained. The valve will automatically dump when the holding signal is removed.

Options:

P31TA 9 2 S G N C 2CN

Body size

Soft start / dump valve (1/4")	P31TA
Soft start / dump valve (1/2")	P32TA

Thread type

BSPP	**1**
BSPT	2
NPT	**9**

Port size

Global modular mini (1/4")	**2**
Global modular compact (1/2")	**4**

Pilot type

P	**External air pilot**
S	**Solenoid pilot**

Actuator interface

G	**15mm solenoid (P31 only)**
C	**30mm solenoid**
P	**Threaded air pilot**

Solenoid type only

Solenoid type

C	**15mm (P31 series only)**
A	**30mm CNOMO coil (P32 only)**
D	**30mm CNOMO coil (M12 connection) (P32 only)**

Solenoid voltage

2CN	**24VDC non locking manual overide**
3GN	**120VAC non locking manual overide**
1FN	**120VAC non locking manual override (P31 series only)**

Note:
P32 unit used for both P32 & P33 series
Bold items are most common.

Port size	Description	Flow‡ dm^3/s (scfm)	Max. bar (psig)	Height mm (inches)	Width mm (inches)	Depth mm (inches)	Weight kg (lbs)	Part number†
1/4"	120VAC Solenoid & cable plug	17 (36)	10 (150)	115.6 (4.5)	57 (2.2)	40 (1.5)	0.37 (0.8)	**P31TA92SGNC1FN**
1/4"	24VDC Solenoid & cable plug	17 (36)	10 (150)	166‡ (6.5)	57 (2.2)	40 (1.5)	0.41 (0.9)	**P31TA92SGNC2CN**
1/4"	External air pilot operated	17 (36)	17 (250)	115.6 (4.5)	57 (2.2)	40 (1.5)	0.37 (0.8)	**P31TA92PPN**
1/2"	120VAC 30mm coil & cable plug incl.	46 (97)	10 (150)	162.5‡ (6.3)	88 (3.4)	57.2 (2.2)	0.87 (1.9)	**P32TA94SCNA3GN**
1/2"	24VDC 30mm coil & cable plug incl.	46 (97)	10 (150)	227.5‡ (8.9)	88 (3.4)	57.2 (2.2)	0.91 (2.0)	**P32TA94SCNA2CN**
1/2"	External air pilot operated	46 (97)	17 (250)	162.5‡ (6.3)	75 (2.9)	57.2 (2.2)	0.87 (1.9)	**P32TA94PPN**

‡ Includes exhaust silencer. Flow with 6.3 bar (91.3) psig) inlet and 1 bar (14.5 psig) pressure drop.
† **Standard part numbers shown in bold. For other models refer to Options chart above.**

Parker Hannifin Corporation
Pneumatic Division
Richland, Michigan
www.parker.com/globalfrl

Technical Information

Fluid:		Compressed air
Max. pressure solenoid operated:		10 bar (150 psig)
Max. pressure air pilot operated:		17 bar (250 psig)
Min. operating pressure:		3 bar (44 psig)
Temperature Max.* solenoid operated:		-10°C to 50°C (14°F to 122°F)
Temperature Max.* air pilot operated:		-20°C to 80°C (-4°F to 176°F)
Air pilot port:		1/8"
Exhaust port:		**P31T** - 1/4" / **P32T** - 1/2"
Gauge port:		**P31T** - 1/8" / **P32T** - 1/4"
Typical flow with 6.3 bar inlet pressure and 1 bar pressure drop:	**P31T**	17 dm^3/s (36 scfm)
	P32T	48 dm^3/s (101 scfm)

* Air supply must be dry enough to avoid ice formation at temperatures below +2°C
Snap pressure: Full flow when downstream pressure reaches 50% of the inlet pressure

Material Specifications

Body:	Aluminum
Body cover:	Polyester
Seals:	Nitrile NBR

Mounting Brackets

Description	Part number **P31T**
L-bracket mounting kit	**P3HKA00ML**
Foot bracket mounting kit	**P3HKA00MC**

Note:
For solenoid operators and cable plugs (connectors) see pages 76 to 77.

Flow Charts

P31TA 1/4" Soft Start & Dump Valve

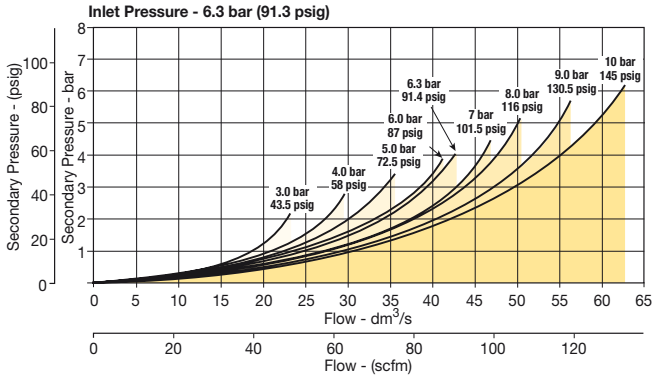

P32TA 1/2" Soft Start & Dump Valve

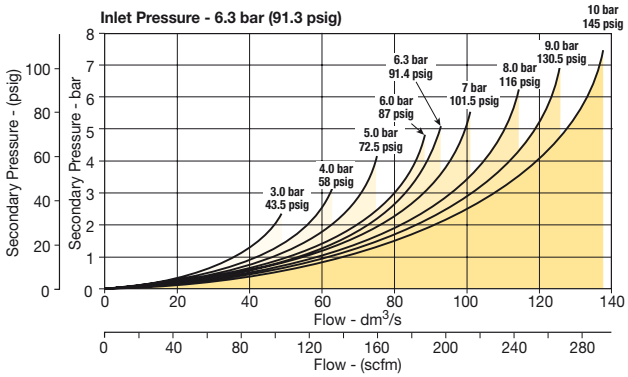

Dimensions mm (inches)

P31T

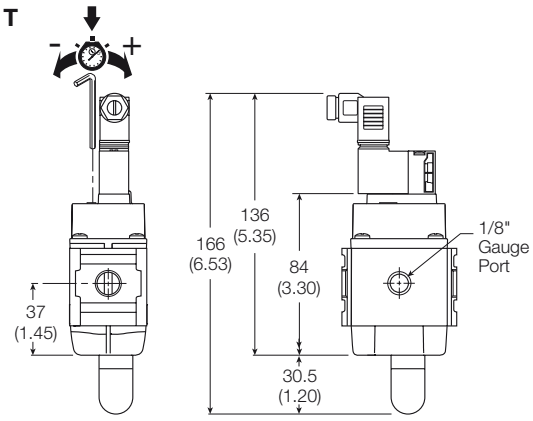

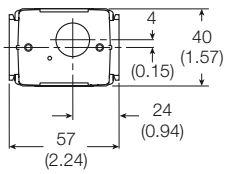

Soft Start Function:

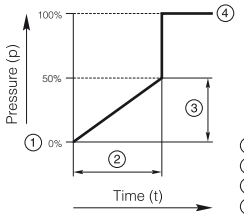

① Start signal
② Switching time delay
③ Gradual pressure build up
④ Operating pressure p² (=p¹)

P32T

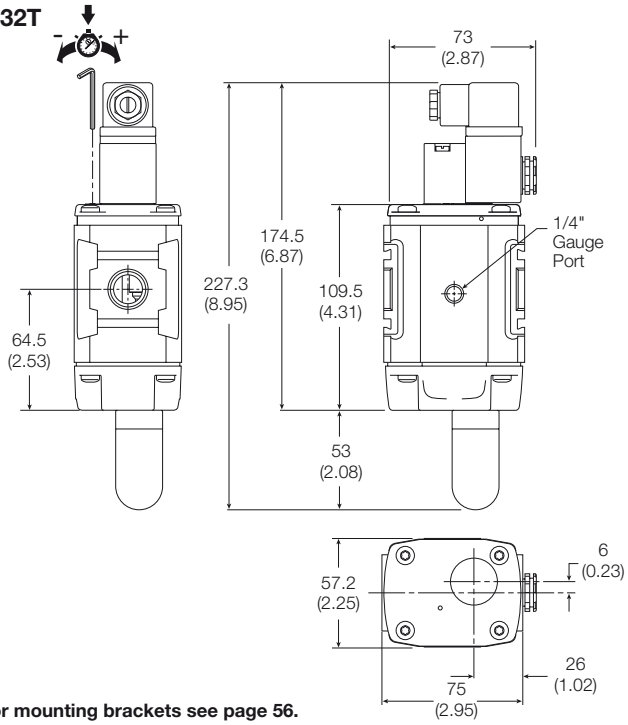

For mounting brackets see page 56.

Parker Hannifin Corporation
Pneumatic Division
Richland, Michigan
www.parker.com/globalfrl

Redundant Safety Exhaust Valve

P33T Schematic

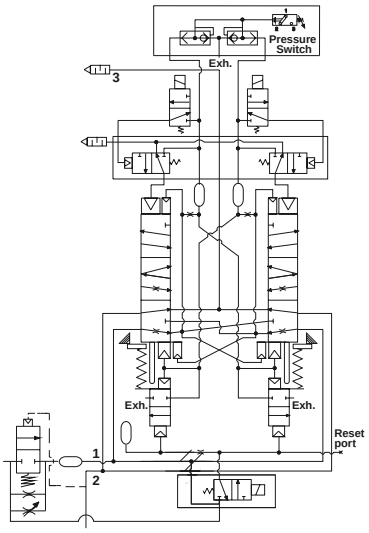

Symbol

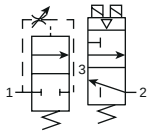

- Proven control reliable technology with integrated soft start
- Soft start application of air to the system when energized; can be adjusted for slower or faster buildup of system pressure
- Rapid exhaust of downstream air when de-energized to remove stored energy and allow safe access
- Memory, monitoring, and air flow control functions are integrated into two identical valve elements. Valves lock-out if asynchronous movement of valve elements occurs during actuation or de-actuation, resulting in a residual outlet pressure of less than 1% of supply.
- Reset can only be accomplished by the integrated electrical (solenoid) reset. Cannot be reset by removing and re-applying supply pressure.
- Basic 3/2 normally closed valve function: Dirt tolerant, wear compensating poppet design for quick response and high flow capacity.
- LED indicators of main solenoid operation, reset solenoid operation, and status indicator condition.
- Optional transducer for monitoring of downstream pressure in the system.
- Dual exhaust silencers included.
- Not for use with clutch / brake applications.
- For use in conjunction with a safety relay or safety PLC.

Options:

P33TA 9 6 R G 4 F 2CN

Body size
- Standard P33T

Thread type
- BSPP 1
- NPT 9

Port size
- 3/4" 6

Type
- Solenoid pilot + gauge R

Operator
- 15mm Solenoid G

Mounting
- Cat 4 w/bracket 4

Solenoid
- Dual M12 connector without transducer F
- Triple M12 connector with transducer G

Voltage
- 24VDC with manual override 2CN

Port size			Cv		Height	Width	Depth	Weight	
Inlet	Outlet	Transducer	1 to 2	2 to 3	mm (inches)	mm (inches)	mm (inches)	kg (lb)	Part number*
3/4	3/4	w/o transducer	3.7	8.5	273.8 (10.78)	136.0 (5.35)	147.6 (5.81)	7.3 (16.1)	**P33TA96RG4F2CN**
3/4	3/4	w/ transducer	3.7	8.5	273.8 (10.78)	136.0 (5.35)	147.6 (5.81)	7.4 (16.3)	**P33TA96RG4G2CN**

* NPT port threads. For BSPP threads, replace "9" in the part number with a "1".

Parker Hannifin Corporation
Pneumatic Division
Richland, Michigan
www.parker.com/globalfrl

Technical Information

Pilot Solenoids:	According to VDE 0580
Enclosure rating:	According to DIN 400 50 IP65
Connector socket:	According to DIN 43650 Form A
	Three solenoids, rated for continuous duty
Standard voltages:	24VDC
Power consumption (each solenoid): for primary and reset solenoids:	1.2 Watts on DC
Enclosure rating:	IP65, IEC 60529
Electrical connection:	M12, 5-pin
Ambient temperature:	15°F to 122°F (-10°C to 50°C)
Media temperature:	40°F to 175°F (4°C to 80°C)
Flow media:	Compressed Air, Filtered to Minimum 40 Micron
Inlet pressure:	30 to 150 PSIG (2 to 10 bar)
Pressure switch rating (Status indicator):	5 Amps at 30 Volts DC.
Monitoring:	Dynamically, cyclically, internally during each actuating and de-actuating movement. Monitoring function has memory and requires an overt act to reset unit after lockout.
Mounting orientation:	Vertically with pilot solenoids on top
Port threads:	3/4 NPT, 3/4 BSPP
Control reliable:	Category 4 (Cat 4); performance Level e (PLe) in accordance with Machine directive - EN ISO 13849-1 (Certification pending)

Repair and Service Kits

Description	Part number
Black grill	**1834C05-001**
Body connector	**P32KA00CB**
Cables	
M12, 5-pin female to flying lead cable, TPE; 2 m (6.6 ft)	**RKC 4.5T-2/S1587**
M12, 5-pin male to flying lead cable, TPE; 2 m (6.6 ft)	**RSC 4.5T-2/S1587**
Port block kit	
1/2 NPT	**P32KA94CP**
3/4 NPT	**P32KA96CP**
1/2 BSPP	**P32KA14CP**
3/4 BSPP	**P32KA16CP**
1/2 BSPT	**P32KA24CP**
3/4 BSPT	**P32KA26CP**
Pressure switch	**1227A30-001**
Pressure transducer (Optional)	**1232H30-001**
T-bracket w/ body connector	**P32KA00MT**
T-bracket (Fits to body connector or port block)	**P32KA00MB**
Silencer(s) 3/4"	**5500A5013**
Solenoid (Main & reset)	**1527B7916-001**
Square flush mounting gauge kit, 0-160 psig	**K4511SCR160**

Valve Wiring

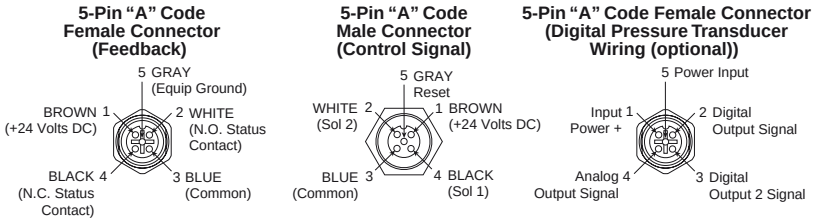

Dimensions mm (inches)

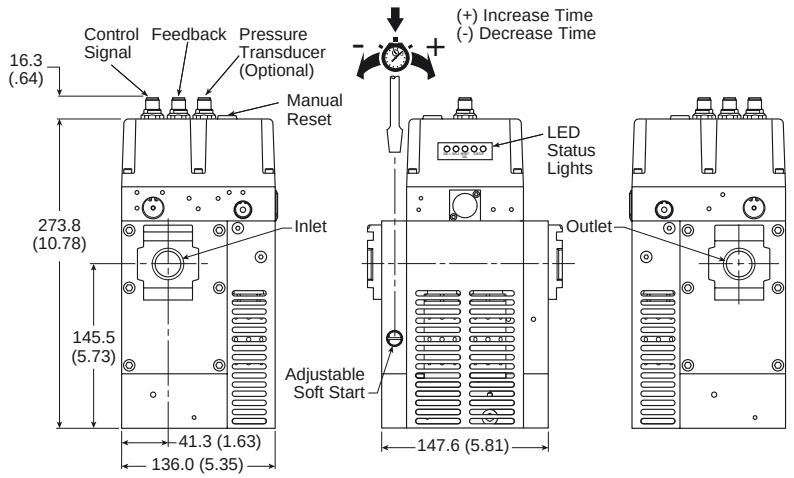

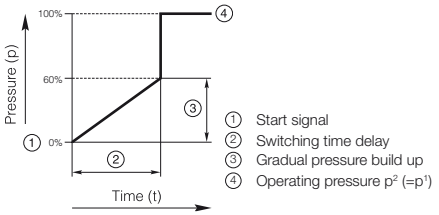

Angle Mounting Bracket

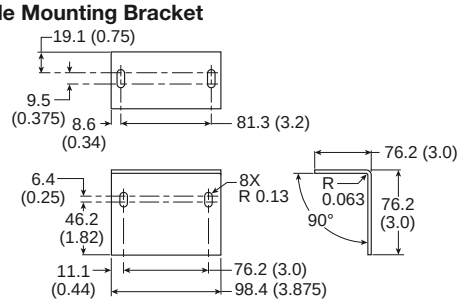

Note: Mounting bracket and installation screws included and required to install unit in the system.

Parker Hannifin Corporation
Pneumatic Division
Richland, Michigan
www.parker.com/globalfrl

Valve de-actuated (ready-to-run):

The flow of inlet air pressure to the inlet chamber of the main valve internals is restricted by a fixed orifice and an adjustable flow control as well as an air piloted 2-way normally closed poppet valve. The flow of inlet air pressure into the crossover passages is restricted by the size of the passage between the stem and the valve body opening. Flow is sufficient to quickly pressurize pilot supply / timing chambers 1 and 2. The inlet poppets prevent air flow from crossover passages into the outlet chamber. Air pressure acting on the inlet poppets and return pistons securely hold the valve elements in the closed position. (Reset adapter omitted for clarity.)

The green “Status” LED will be illuminated indicating the valve is operational.

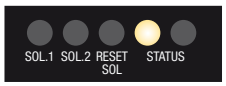

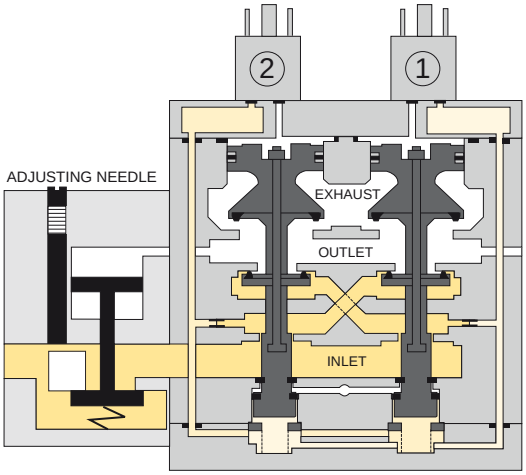

Valve actuated:

Energizing the pilot valves simultaneously applies pressure to both pistons, forcing the internal parts to move to their actuated (open) position, where inlet air flow to crossover passages is fully open, inlet poppets are fully open and exhaust poppets are fully closed. The outlet is then pressurized at a rate allowed by the fixed orifice and the adjusted flow control. Once the air pressure in the outlet chamber reaches approximately 60% of inlet pressure, the air piloted 2-way normally closed poppet valve opens fully and the pressure in the inlet, crossovers, outlet, and timing chambers are quickly equalized. The adjustable flow control will control the time it takes for the outlet air pressure to reach approximately 60% of inlet pressure.

De-energizing the pilots quickly causes the valve elements to return to the ready-to-run position.

Solenoid 1, Solenoid 2 and the green “Status” LED’s will be illuminated indicating the valve is operating properly.

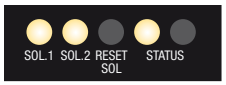

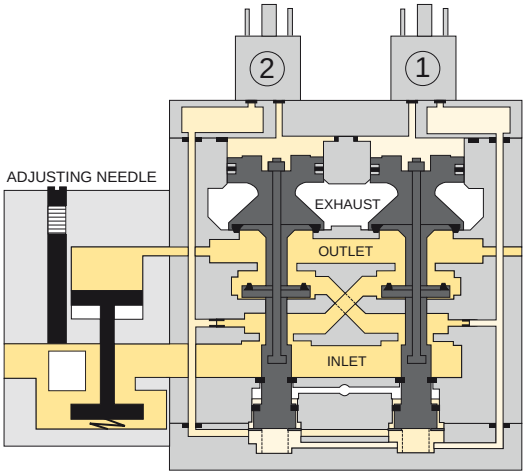

Soft start function:

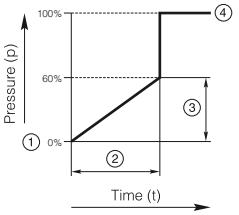

1. Start signal
2. Switching time delay
3. Gradual pressure build up
4. Operating pressure p^2 (=p^1)

Parker Hannifin Corporation
Pneumatic Division
Richland, Michigan
www.parker.com/globalfrl

Valve fault and lock-out:

Whenever the valve elements operate in a sufficiently asynchronous manner, either on actuation or de-actuation, the valve will move to a locked-out position. In the locked-out position, one crossover and its related timing chamber will be exhausted, and the other crossover and its related timing chamber will be fully pressurized. The valve element (side 2) that is partially actuated has pilot air available to fully actuate it, but no air pressure on the return piston to fully de-actuate the valve element.

Air pressure in the crossover acts on the differential of side 2 stem diameters creating a latching force. Side 1 is in a fully closed position, and has no pilot air available to actuate, but has full pressure on the inlet poppet and return piston to hold the element in the fully closed position. Inlet air flow on side 1 into its crossover is restricted, and flows through the open inlet poppet on side 2, through the outlet into the exhaust port, and from the exhaust port to atmosphere. Residual pressure in the outlet is less than 1% of inlet pressure. The return springs are limited in travel, and can only return the valve elements to the intermediate (locked-out) position. Sufficient air pressure acting on the return pistons is needed to return the valve elements to a fully closed position.

The red “Status” LED will be illuminated indicating the valve in fault and lock-out must be reset

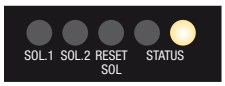

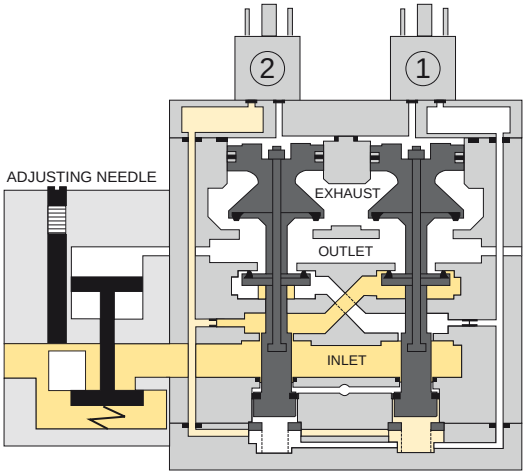

Valve reset (electrical or manual):

The reset procedure is as follows:

- Remove the electrical signals to the main coils
- Ensure there is air supplied to the valve
- Energize the reset solenoid for a minimum of 200 ms
- Allow a 200 ms delay after de-energizing the reset solenoid and re-energizing the main solenoids

The valve will remain in the locked-out position, even if the inlet air supply is removed and re-applied.

A remote reset signal must be applied to reset the valve. A momentary, remote electrical signal must be applied to the reset solenoid to apply pressure to the reset pistons in the valve. Actuation of the reset piston physically pushes the main valve elements to their closed position. Inlet air fully pressurizes the crossovers and holds the inlet poppets on seat. Actuation of the reset piston opens the reset poppet, thereby, immediately exhausting pilot supply air, thus, preventing valve operation during reset (Reset adapter added to illustration.). De-actuation of reset pistons causes the reset poppets to close and pilot supply to fully pressurize. Reset air pressure is applied by a 3/2 normally closed solenoid, or a manual push button mounted on the reset adapter in the top valve cover.

The green “Status” LED will be illuminated once the valve is reset.

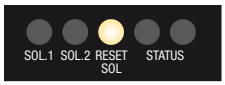

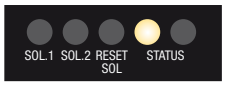

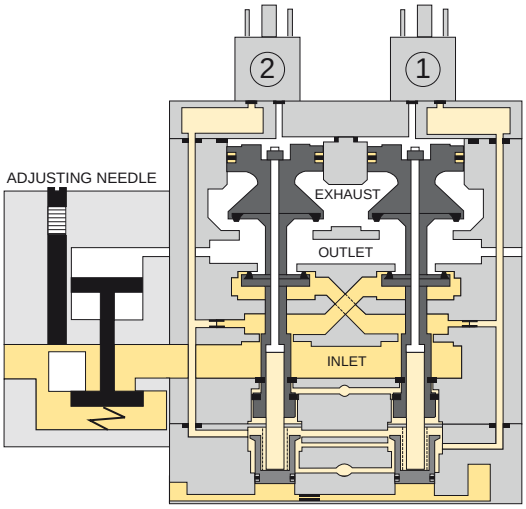

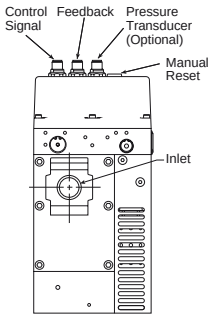

Parker Hannifin Corporation
Pneumatic Division
Richland, Michigan
www.parker.com/globalfrl

Solenoid Operators - CNOMO

Technical data - Solenoid operators, coil combinations

	NC Normal Operator with 22 x 30 standard coil	**NC Normal Operator** with 30 x 30 standard coil
Working pressure	0 to 10 bar	0 to 10 bar
Ambient temperature	-10°C to 60°C *	-10°C to 60°C *
Power (DC)	4.8W	2.7W
Power (AC)	8.5VA	4.9VA
Voltage tolerance	+/-10%	+/-10%
Duty cycle	100%	100%
Insulation class	F	F
Electric connection	B Industrial	DIN 43650A
Protection	IP65	IP65
Approval		UL/CSA
Working media	All neutral media such as compressed air	

* Limited to 50°C if use with 100% duty cycle

P31 Series only - Solenoid coils 15mm NC

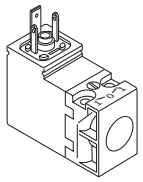

Voltage	Order code Override, blue, non-locking flush	Weight (Kg)
24VDC	**PS2982B49P**	0.038
115VAC 50Hz / 120VAC 60Hz	**PS2982B53P**	0.038

Solenoid Coils with M12 Connection

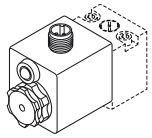

Voltage	Part number	Weight (Kg)
Direct current		
24VDC	**P2FC6449**	0.065

Transients

Interrupting the current through the solenoid coil produces momentary voltage peaks which, under unfavorable conditions, can amount to several hundred times the rated operating voltage. Normally, these transients do not cause problems, but to achieve the Maximum life of relays in the circuit (and particularly of transistors, thyristors and integrated circuits) it is desirable to provide protection by means of voltage-dependent resistors (varistors). All connectors/cable plugs EN175301-803 with LED's include this type of circuit protection.

Materials

Pilot Valve	
Body:	Polyamide
Armature tube:	Brass
Plunger & core:	Corrosion resistant Cr-Ni steel
Seals:	Fluorocarbon
Screws:	Stainless steel
Coil	
Encapsualtion material:	Thermoplastic as standard Duroplast for M12 connection

Spare Base Solenoid Pilot Operator CNOMO NC

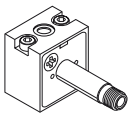

Description	Part number non-lock manual override	Weight (Kg)
Standard Duty	**P2FP23N4B**	0.065
No Override	**P2FP23N4A**	0.065

Note: Solenoid pilot operators are fitted to the Global range. Order the above part numbers for spares. The operators are supplied with mounting screws and interface 'O' rings. Coils and connectors must be ordered separately.

Solenoid Coils with DIN A or Industrial B Connection

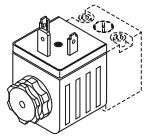

Voltage	22mm x 30mm Part number B industrial standard	Weight (Kg)	30mm x 30mm Part number DIN 43650A standard	Weight (Kg)
Direct current				
24VDC	**P2FCB449**	0.093	**P2FCA449**	0.105
Alternative current				
110V 50Hz, 120V 60Hz	**P2FCB453**	0.093	**P2FCA453**	0.105

Parker Hannifin Corporation
Pneumatic Division
Richland, Michigan
www.parker.com/globalfrl

Solenoid Connectors / Cable Plugs EN175301-803

	Description	Part number 22mm Form B Industrial	Part number 30mm Form A DIN 43650A
With standard screw 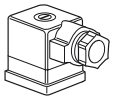	Standard IP65 without flying lead	**PS2429BP**	**PS2028BP**
	With LED and protection 24VAC/DC	**PS243079BP**	**PS203279BP**
	With LED and protection 110VAC	**PS243083BP**	**PS203283BP**
With cable 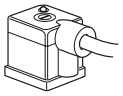	Standard with 2m cable IP65	**PS2429JBP**	**PS2028JCP**
	24VAC/DC, 2m cable LED and protection IP65	**PS2430J79BP**	**PS2032J79CP**
	110VAC/DC, 2m cable LED and protection IP65	**PS2430J83BP**	**PS2032J83CP**

Solenoid coil dimensions mm (inches)

15mm

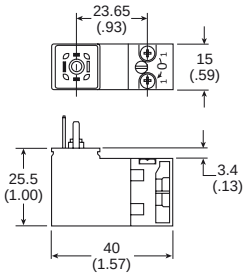

22 x 30mm

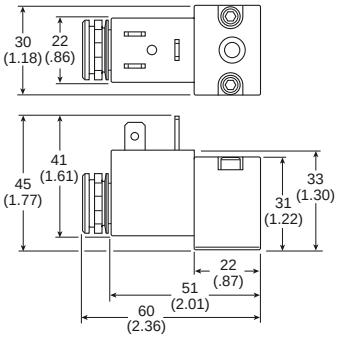

30 x 30mm

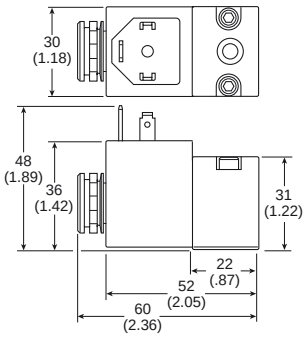

Electrical schematics

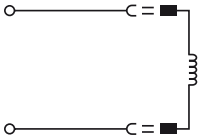

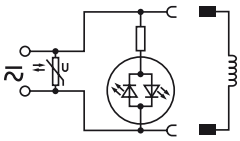

PS2028BP	**PS243079BP**	**PS203279BP**
PS2028JBP	**PS2430J79BP**	**PS2032J79CP**
PS2429BP	**PS243083BP**	**PS203283BP**
PS2429JBP	**PS2430J83BP**	**PS2032J83CP**
PS2932BP	**PS294679BP**	**PS294683BP**
PS2932JBP	**PS2946J79BP**	**PS2946J83BP**

Cable plug dimensions mm (inches)

22mm Form B Industrial
Cable plugs

PS2429BP

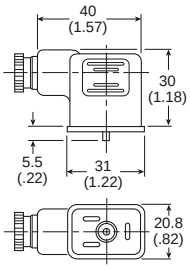

30mm DIN 43650A
Cable plugs

PS2028BP

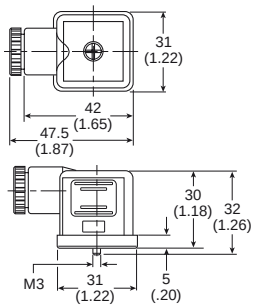

Parker Hannifin Corporation
Pneumatic Division
Richland, Michigan
www.parker.com/globalfrl

Ball Valve / Lockout Valve

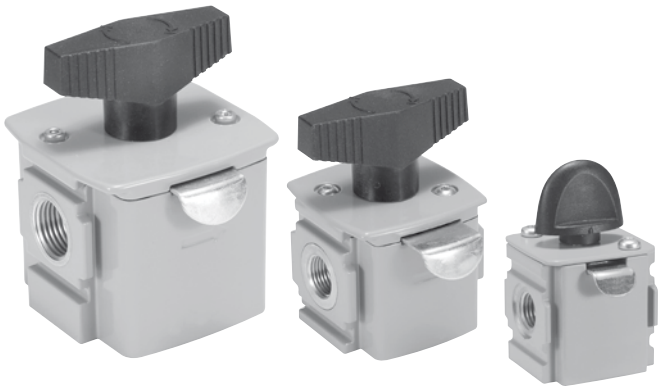

Ordering Information

Model type	Port size	Exhaust port	Thread type	Flow dm^3/s (scfm)	Modular ball valve flow from left to right
P31	1/4"	1/4"	NPT	20 (42.4)	**P31VB92LBNN**
P32	3/8"	1/4"	NPT	90 (190.7)	**P32VB93LBNN**
	1/2"	1/4"	NPT	122 (258.5)	**P32VB94LBNN**
P33	1/2"	1/2"	NPT	265 (561.5)	**P33VB94LBNN**
	3/4"	1/2"	NPT	320 (678)	**P33VB96LBNN**

For thread type: BSPP **1**
BSPT **2**
NPT **9**

Material Specifications

Body		Aluminum
Seals		PTFE
Ball	**P31**	Stainless Steel
	P32 / **P33**	Stainless Steel
Lockout Tab		Zinc Plated Steel
Screw		Zinc Plated Steel

Symbol

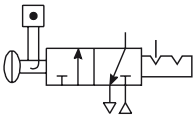

Features

The Ball / Lockout Valve shuts off downstream line pressure in the closed position with a 90° turn of the handle. In the closed position, inlet air pressure is blocked and downstream / system air is exhausted through a threaded port. To prevent unauthorized adjustment, the padlock slide may be assembled on either side. It is recommended that this slide is installed after final system assembly.

The Safety Lockout valves conform to OSHA #29 CFR part 1910 — control of hazardous energy source (lockout / tagout).

Note: This padlock slide is a permanent assembly and may not be removed later, any unauthorized tampering will void any warranty claims. The valve can only be locked in the closed position.

Specifications

Operating temperature		-40°C to 80°C (-40°F to 176°F)
Max. supply pressure		17 bar (250 psig)
Port size	BSPP / BSPT / NPT	1/4, 3/8, 1/2, 3/4
Weight	**P31:**	0.15 kg (0.33 lbs)
	P32:	0.36 kg (0.79 lbs)
	P33:	0.55 kg (1.21 lbs)

Dimensions mm (inches)

P31

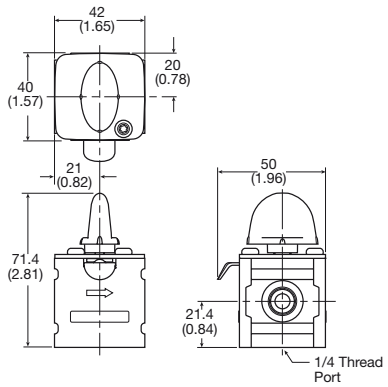

P32

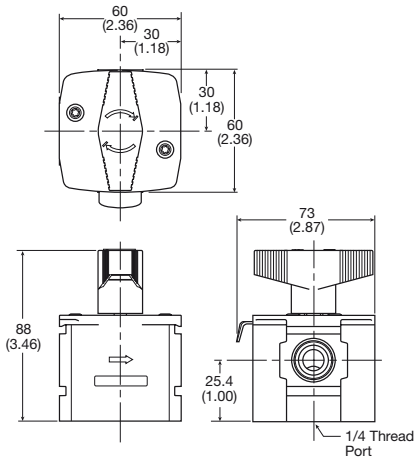

P33

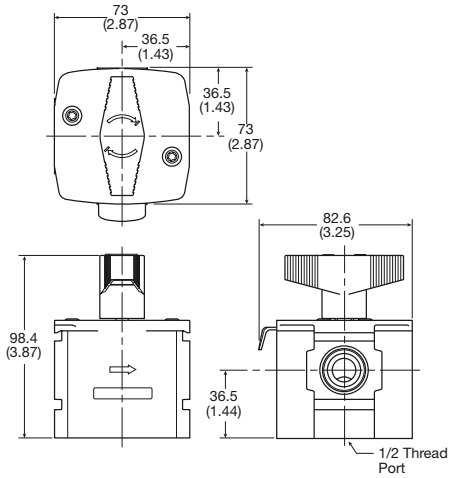

Parker Hannifin Corporation
Pneumatic Division
Richland, Michigan
www.parker.com/globalfrl

Manifold Blocks

Symbol

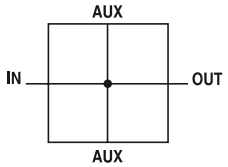

Features

- Available in 1/4" or 3/4" threaded inlet / outlet ports
- Two additional top and bottom auxiliary ports standard
- Can be mounted anywhere in the FRL system

Ordering Information

Model type	In / Out port size	Auxiliary port size top	Auxilliary port size bottom	Thread type	Part number
P31	1/4"	1/4"	1/4"	NPT	**P31MA92022N**
P32	1/2"	1/4"	1/2"	NPT	**P32MA94024N**
P33	3/4"	1/4"	1/2"	NPT	**P33MA96024N**

For thread type: BSPP **1**
BSPT **2**
NPT **9**

Specifications

Operating temperature		-40°C to 65.5°C (-40°F to 150°F)
Max. supply pressure		20.7 bar (300 psig)
Weight	**P31:**	0.19 kg (0.26 lbs)
	P33:	0.34 kg (0.42 lbs)

Material Specifications

Body	Aluminum

Dimensions mm (inches)

P31

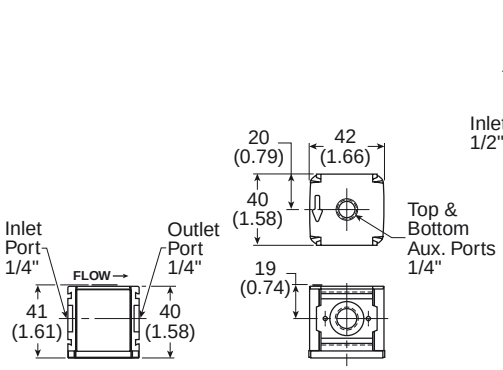

P32

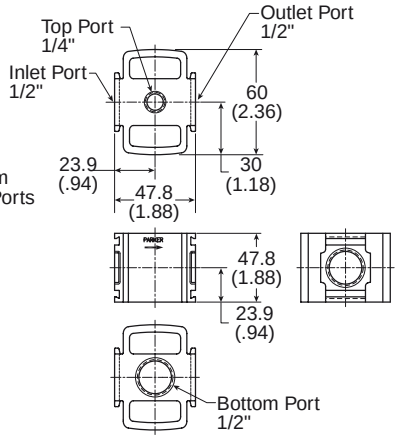

P33

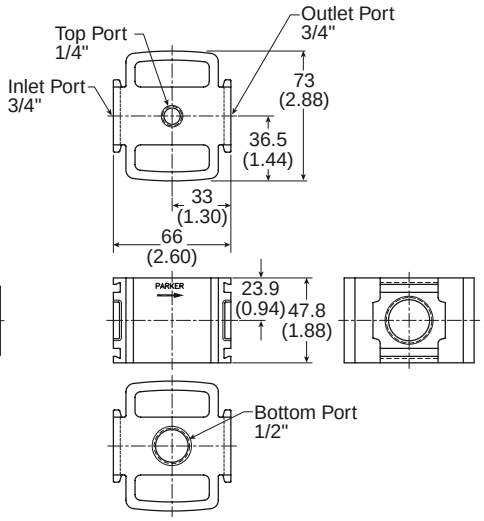

Parker Hannifin Corporation
Pneumatic Division
Richland, Michigan
www.parker.com/globalfrl

Accessories - P31 Series

C-Bracket
(Fits to filter and lubricator body)

P31KA00MW

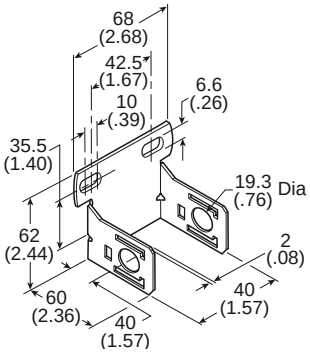

T-Bracket w/ Body Connector
(O-ring not shown)

P31KA00MT

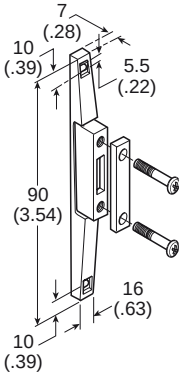

Body Connector
(O-ring not shown)

P31KA00CB

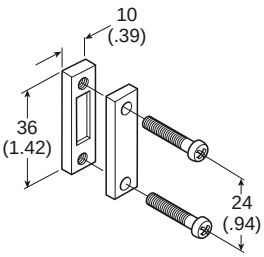

Port Block Kit
(O-ring not shown)

1/8 NPT **P31KA91CP**
1/4 NPT **P31KA92CP**
3/8 NPT **P31KA93CP**
1/8 BSPP **P31KA11CP**
1/4 BSPP **P31KA12CP**
3/8 BSPP **P31KA13CP**

1/8 BSPT **P31KA21CP**
1/4 BSPT **P31KA22CP**
3/8 BSPT **P31KA23CP**

Port Block Kit w/ T-Bracket
(O-ring not shown)

1/8 NPT **P31KA91CN**
1/4 NPT **P31KA92CN**
3/8 NPT **P31KA93CN**
1/8 BSPP **P31KA11CN**
1/4 BSPP **P31KA12CN**
3/8 BSPP **P31KA13CN**

1/8 BSPT **P31KA21CN**
1/4 BSPT **P31KA22CN**
3/8 BSPT **P31KA23CN**

Angle Bracket
(Fits to regulator and filter/regulator body)

P31KB00MR

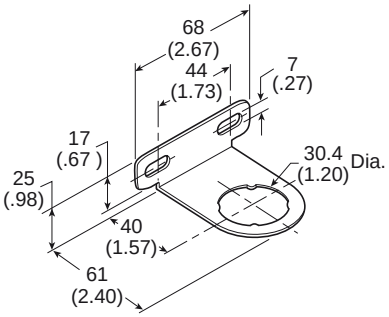

Parker Hannifin Corporation
Pneumatic Division
Richland, Michigan
www.parker.com/globalfrl

Accessories - P32 Series

T-Bracket w/ Body Connector

P32KA00MT

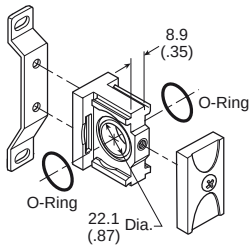

Body Connector

P32KA00CB

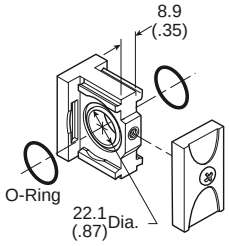

Port Block Kit

1/4 NPT	**P32KA92CP**	1/4 BSPT	**P32KA22CP**
3/8 NPT	**P32KA93CP**	3/8 BSPT	**P32KA23CP**
1/2 NPT	**P32KA94CP**	1/2 BSPT	**P32KA24CP**
3/4 NPT	**P32KA96CP**	3/4 BSPT	**P32KA26CP**
1/4 BSPP	**P32KA12CP**		
3/8 BSPP	**P32KA13CP**		
1/2 BSPP	**P32KA14CP**		
3/4 BSPP	**P32KA16CP**		

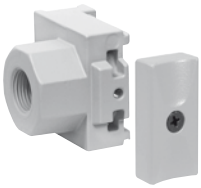

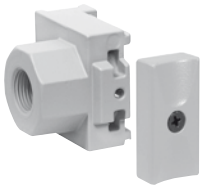

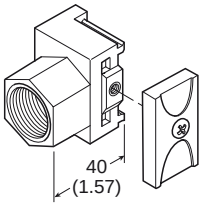

Angle Bracket

(Fits to regulator and filter/regulator bonnet)

P32KB00MR

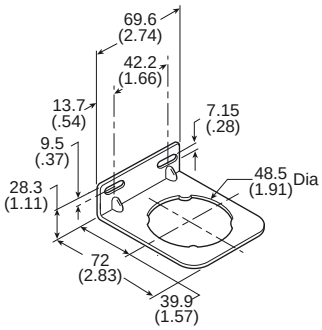

L-Bracket

(Fits to filter and lubricator body)

P32KA00ML

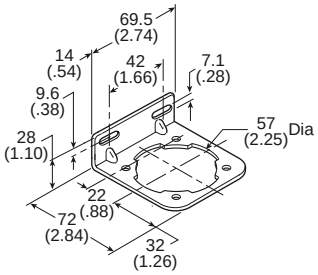

T-Bracket

(fits to body connector or port block)

P32KA00MB

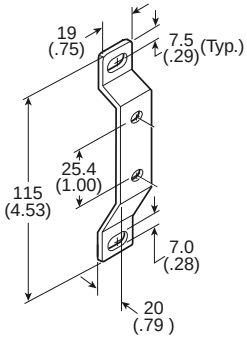

Parker Hannifin Corporation
Pneumatic Division
Richland, Michigan
www.parker.com/globalfrl

Accessories - P33 Series

T-Bracket w/ Body Connector

P32KA00MT

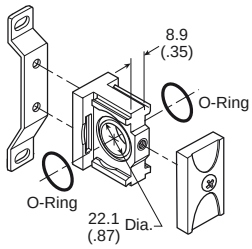

Body Connector

P32KA00CB

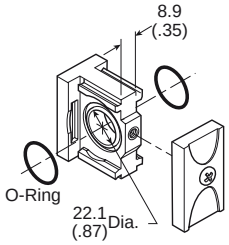

Port Block Kit

1/4 NPT..... **P32KA92CP**
3/8 NPT..... **P32KA93CP**
1/2 NPT..... **P32KA94CP**
3/4 NPT..... **P32KA96CP**
1/4 BSPP **P32KA12CP**
3/8 BSPP **P32KA13CP**
1/2 BSPP **P32KA14CP**
3/4 BSPP **P32KA16CP**

1/4 BSPT **P32KA22CP**
3/8 BSPT **P32KA23CP**
1/2 BSPT **P32KA24CP**
3/4 BSPT **P32KA26CP**

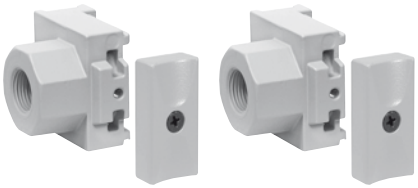

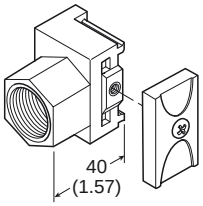

Angle Bracket

(Fits to regulator and filter/regulator bonnet)

P33KA00MR

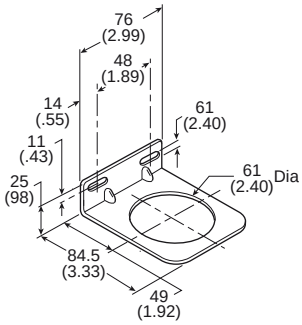

L-Bracket

(Fits to filter and lubricator body)

P33KA00ML

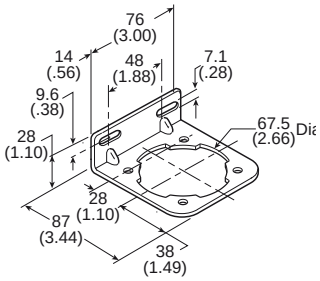

T-Bracket

(fits to body connector or port block)

P32KA00MB

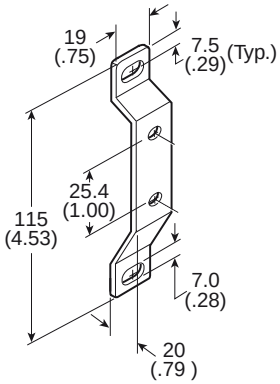

Parker Hannifin Corporation
Pneumatic Division
Richland, Michigan
www.parker.com/globalfrl

Series	Description	Part number	
P31 P32 P33	Panel Mount Nut (Plastic)	**P31KA00MP** **P32KA00MP** **P33KA00MP**	
P31 P32 P33	Panel Mount Nut (Aluminum)	**P31KA00MM** **P32KA00MM** **P33KA00MM**	
P31 P32 P33	5µ Element Kit	**P31KA00ESE** **P32KA00ESE** **P33KA00ESE**	
P31 P32 P33	1µ Element Kit	**P31KA00ES9** **P32KA00ES9** **P33KA00ES9**	
P31 P32 P33	0.01µ Element Kit	**P31KA00ESC** **P32KA00ESC** **P33KA00ESC**	
P31 P32 P33	Adsorber Element Kit	**P31KA00ESA** **P32KA00ESA** **P33KA00ESA**	
P32 / P33	Auto Drain Kit	**P32KA00DA**	
P31 P32 / P33	Differential Pressure Indicator Kit	**P31KB00RQ** **P32KA00RQ**	
P31 / P32 / P33	Drip Control Assembly Kit	**P32KA00PH**	
P31 P32 / P33	Fill Plug Kit	**P31KA00PL** **P32KA00PL**	
P31 P32 P33	Lubricator - Plastic Bowl w/ Bowl Guard No Drain	**P31KB00BGN** **P32KB00BGN** **P33KA00BGN**	

Parker Hannifin Corporation
Pneumatic Division
Richland, Michigan
www.parker.com/globalfrl

Series	Description	Part number	
P31 P32 P33	Lubricator - Metal Bowl w/o Sight Gauge No Drain	**P31KB00BMN** **P32KB00BMN** **P33KA00BMN**	
P32 P33	Lubricator - Metal Bowl w/ Sight Gauge No Drain	**P32KB00BSN** **P33KA00BSN**	
P31 P32 P33	Metal Bowl w/o Sight Gauge & Manual Drain	**P31KB00BMM** **P32KB00BMM** **P33KA00BMM**	
P31	Metal Bowl w/o Sight Gauge & Pulse Drain	**P31KB00BMB**	
P32 P33	Metal Bowl w/o Sight Gauge & Auto Drain	**P32KB00BMA** **P33KA00BMA**	
P32 P33	Metal Bowl w/ Sight Gauge & Manual Drain	**P32KB00BSM** **P33KA00BSM**	
P32 P33	Metal Bowl w/ Sight Gauge & Auto Drain	**P32KB00BSA** **P33KA00BSA**	
P31 P32 P33	Plastic Bowl w/ Bowl Guard & Manual Drain	**P31KB00BGM** **P32KB00BGM** **P33KA00BGM**	
P31	Plastic Bowl w/ Bowl Guard & Pulse Drain	**P31KB00BGB**	
P32 P33	Plastic Bowl w/ Bowl Guard & Auto Drain	**P32KB00BGA** **P33KA00BGA**	
P31 P32 P33	Regulator - Relieving Repair Kit	**P31KB00RB** **P32KB00RB** **P33KA00RB**	
P31 P32 P33	Regulator - Non-Relieving Repair Kit	**P31KB00RC** **P32KB00RC** **P33KA00RC**	

Parker Hannifin Corporation
Pneumatic Division
Richland, Michigan
www.parker.com/globalfrl

Series	Description	Connection		Part number	
P31 P32 P33	Regulator - Main Adjusting Spring 0-2 bar (0-30 psig) Kit			**P31KB00PR** **P32KB00PR** **P33KA00PR**	
P31 P32 P33	Regulator - Main Adjusting Spring 0-4.1 bar (0-60 psig) Kit			**P31KB00PS** **P32KB00PS** **P33KA00PS**	
P31 P32 P33	Regulator - Main Adjusting Spring 0-8.6 bar (0-125 psig) Kit			**P31KB00PT** **P32KB00PT** **P33KA00PT**	
P31 P32 P33	Regulator - Main Adjusting Spring 0-17 bar (0-250 psig) Kit			**P31KB00PV** **P32KB00PV** **P33KA00PV**	
P31	Square Flush Mounting Gauge Kit	0-4 bar 0-11 bar 0-60 psig 0-160 psig		**K4511SCR04B** **K4511SCR11B** **K4511SCR060** **K4511SCR160**	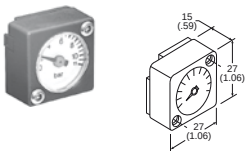
P31 / P32	Square Mounting Gauge with Adapter Kit	0-4 bar 0-11 bar 0-60 psig 0-160 psig		**P6G-PR10040** **P6G-PR10110** **P6G-PR90060** **P6G-PR90160**	
P31	1" Round Gauge	0-60 psig / 0-4.1 bar 0-160 psig / 0-10 bar	1/8" 1/8"	**K4510N18060** **K4510N18160**	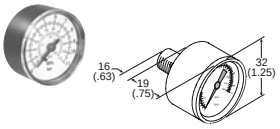
P31	40mm Round Gauge	0-30 psig / 0-2 bar 0-60 psig / 0-4.1 bar 0-160 psig / 0-10 bar	1/8" 1/8" 1/8"	**K4515N18030** **K4515N18060** **K4515N18160**	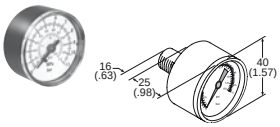
P32 / P33	50mm Round Gauge	0-30 psig / 0-2 bar 0-60 psig / 0-4.1 bar 0-160 psig / 0-10 bar 0-300 psig / 0-20 bar	1/4" 1/4" 1/4" 1/4"	**K4520N14030** **K4520N14060** **K4520N14160** **K4520N14300**	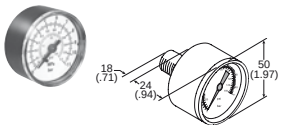

Parker Hannifin Corporation
Pneumatic Division
Richland, Michigan
www.parker.com/globalfrl

Series	Description	Part number	
P31 P32 / P33	Body Connector O-ring (Replacement kit) (Pack of 10)	**P31KA00CY** **P32KA00CY**	
P31 P32	Tamperproof Knob Kit	**P31KB00AT** **P32KB00AT**	
P31 P32	Tamperproof Lockable Kit	**P31KB00AL** **P32KB00AL**	

Parker Hannifin Corporation
Pneumatic Division
Richland, Michigan
www.parker.com/globalfrl

Pressure Switch – PPS1

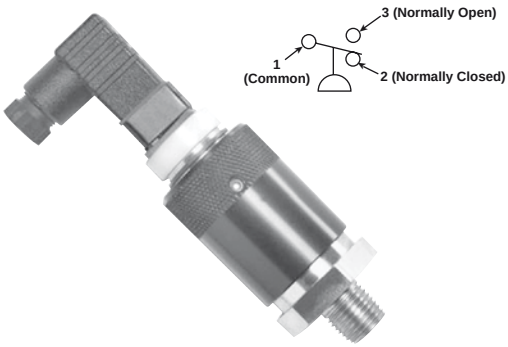

- Long life elastomer diaphragm
- High quality snap action switch
- Field adjustable
- Compact design
- Easily customized
- Quick delivery
- NEMA 4, 13

Operation

The pressure switch monitors the air pressure in your pneumatic system. When the pressure in your system either drops below or exceeds the set point pressure, an electrical output is given.

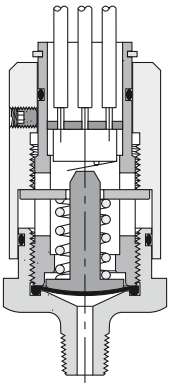

Dimensions

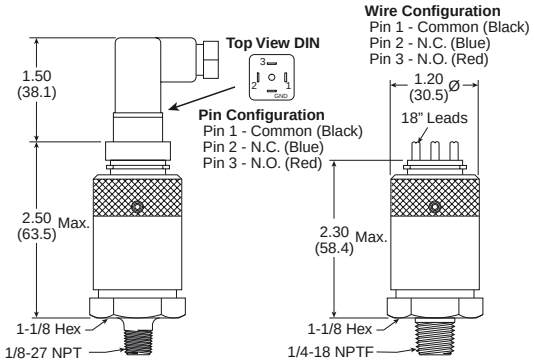

Definitions and Terminology

Repeatability — Accuracy is the maximum allowable set point deviation of a single pressure or temperature switch under one given set of environmental and operational conditions.
Single Pole Double Throw (SPDT) Switching element — A SPDT switching element has one normally open, one normally closed and one common terminal. Three terminals mean that the switch can be wired with the circuit either normally open (NO), or normally closed (NC), or both.
Dead Band — The dead band, sometimes referred to as "differential" or "hysteresis", is the change in pressure between actuation and deactuation set points.

Specifications

Set point tolerance	±1 PSI or 5% (.07 bar)
Temperature range	-40F° to 220F° (-40C° to 105C°)
Max. operating pressure (Ranges 1, 2, 3)	250 PSI (17.2 bar)
Max. operating pressure (Range 4)	2000 PSI (137.9 bar)
Deadband	10 - 20% of set pressure
Current rating	3A @ 125 VAC 2A @ 30 VDC (Resistive)
Circuit form	SPDT Standard
Cycle life	1 Million

Material Specifications

Adjustment knob	Anodized aluminum
Body	Brass
Diaphragm	Nitrile

Options:

PPS1 - 1 C 3 - R HM

Thread	
1/4" NPT male	1
1/8" NPT male	2
1/4" BSPP male	17
1/8" BSPP male	18

Circuit	
SPDT	C

Range*	
1	3-10 PSI
2	6-30 PSI
3	20-120 PSI
4	100-400 PSI†

† Only available in 1/4" NPT

Set Point Direction	
R	Rising

Electrical Connection	
HM	DIN 9.4mm
WL	Wire leads 18"

* Factory setting for calibration purposes
Range 1 = 6 PSI
Range 2 = 18 PSI
Range 3 = 70 PSI
Range 4 = 250 PSI

Note: Switch is field adjustable.

Parker Hannifin Corporation
Pneumatic Division
Richland, Michigan
www.parker.com/globalfrl

Safety Guide For Selecting And Using Pneumatic Division Products And Related Accessories

⚠ WARNING:

FAILURE OR IMPROPER SELECTION OR IMPROPER USE OF PNEUMATIC DIVISION PRODUCTS, ASSEMBLIES OR RELATED ITEMS ("PRODUCTS") CAN CAUSE DEATH, PERSONAL INJURY, AND PROPERTY DAMAGE. POSSIBLE CONSEQUENCES OF FAILURE OR IMPROPER SELECTION OR IMPROPER USE OF THESE PRODUCTS INCLUDE BUT ARE NOT LIMITED TO:

- Unintended or mistimed cycling or motion of machine members or failure to cycle
- Work pieces or component parts being thrown off at high speeds.
- Failure of a device to function properly for example, failure to clamp or unclamp an associated item or device.
- Explosion
- Suddenly moving or falling objects.
- Release of toxic or otherwise injurious liquids or gasses.

Before selecting or using any of these Products, it is important that you read and follow the instructions below.

1. GENERAL INSTRUCTIONS

1.1. Scope: This safety guide is designed to cover general guidelines on the installation, use, and maintenance of Pneumatic Division Valves, FRLs (Filters, Pressure Regulators, and Lubricators), Vacuum products and related accessory components.

1.2. Fail-Safe: Valves, FRLs, Vacuum products and their related components can and do fail without warning for many reasons. Design all systems and equipment in a fail-safe mode, so that failure of associated valves, FRLs or Vacuum products will not endanger persons or property.

1.3 Relevant International Standards: For a good guide to the application of a broad spectrum of pneumatic fluid power devices see: ISO 4414:1998, Pneumatic Fluid Power – General Rules Relating to Systems. See www.iso.org for ordering information.

1.4. Distribution: Provide a copy of this safety guide to each person that is responsible for selection, installation, or use of Valves, FRLs or Vacuum products. Do not select, or use Parker valves, FRLs or vacuum products without thoroughly reading and understanding this safety guide as well as the specific Parker publications for the products considered or selected.

1.5. User Responsibility: Due to the wide variety of operating conditions and applications for valves, FRLs, and vacuum products Parker and its distributors do not represent or warrant that any particular valve, FRL or vacuum product is suitable for any specific end use system. This safety guide does not analyze all technical parameters that must be considered in selecting a product. The user, through its own analysis and testing, is solely responsible for:

- Making the final selection of the appropriate valve, FRL, Vacuum component, or accessory.
- Assuring that all user's performance, endurance, maintenance, safety, and warning requirements are met and that the application presents no health or safety hazards.
- Complying with all existing warning labels and / or providing all appropriate health and safety warnings on the equipment on which the valves, FRLs or Vacuum products are used; and,
- Assuring compliance with all applicable government and industry standards.

1.6. Safety Devices: Safety devices should not be removed, or defeated.

1.7. Warning Labels: Warning labels should not be removed, painted over or otherwise obscured.

1.8. Additional Questions: Call the appropriate Parker technical service department if you have any questions or require any additional information. See the Parker publication for the product being considered or used, or call 1-800-CPARKER, or go to www.parker.com, for telephone numbers of the appropriate technical service department.

2. PRODUCT SELECTION INSTRUCTIONS

2.1. Flow Rate: The flow rate requirements of a system are frequently the primary consideration when designing any pneumatic system. System components need to be able to provide adequate flow and pressure for the desired application.

2.2. Pressure Rating: Never exceed the rated pressure of a product. Consult product labeling, Pneumatic Division catalogs or the instruction sheets supplied for Maximum pressure ratings.

2.3. Temperature Rating: Never exceed the temperature rating of a product. Excessive heat can shorten the life expectancy of a product and result in complete product failure.

2.4. Environment: Many environmental conditions can affect the integrity and suitability of a product for a given application. Pneumatic Division products are designed for use in general purpose industrial applications. If these products are to be used in unusual circumstances such as direct sunlight and/or corrosive or caustic environments, such use can shorten the useful life and lead to premature failure of a product.

2.5. Lubrication and Compressor Carryover: Some modern synthetic oils can and will attack nitrile seals. If there is any possibility of synthetic oils or greases migrating into the pneumatic components check for compatibility with the seal materials used. Consult the factory or product literature for materials of construction.

2.6. Polycarbonate Bowls and Sight Gauges: To avoid potential polycarbonate bowl failures:

- Do not locate polycarbonate bowls or sight gauges in areas where they could be subject to direct sunlight, impact blow, or temperatures outside of the rated range.
- Do not expose or clean polycarbonate bowls with detergents, chlorinated hydro-carbons, keytones, esters or certain alcohols.
- Do not use polycarbonate bowls or sight gauges in air systems where compressors are lubricated with fire resistant fluids such as phosphate ester and di-ester lubricants.

Parker Hannifin Corporation
Pneumatic Division
Richland, Michigan
www.parker.com/globalfrl

2.7. Chemical Compatibility: For more information on plastic component chemical compatibility see Pneumatic Division technical bulletins Tec-3, Tec-4, and Tec-5

2.8. Product Rupture: Product rupture can cause death, serious personal injury, and property damage.
- Do not connect pressure regulators or other Pneumatic Division products to bottled gas cylinders.
- Do not exceed the Maximum primary pressure rating of any pressure regulator or any system component.
- Consult product labeling or product literature for pressure rating limitations.

3. PRODUCT ASSEMBLY AND INSTALLATION INSTRUCTIONS

3.1. Component Inspection: Prior to assembly or installation a careful examination of the valves, FRLs or vacuum products must be performed. All components must be checked for correct style, size, and catalog number. DO NOT use any component that displays any signs of nonconformance.

3.2. Installation Instructions: Parker published Installation Instructions must be followed for installation of Parker valves, FRLs and vacuum components. These instructions are provided with every Parker valve or FRL sold, or by calling 1-800-CPARKER, or at www.parker.com.

3.3. Air Supply: The air supply or control medium supplied to Valves, FRLs and Vacuum components must be moisture-free if ambient temperature can drop below freezing

4. VALVE AND FRL MAINTENANCE AND REPLACEMENT INSTRUCTIONS

4.1. Maintenance: Even with proper selection and installation, valve, FRL and vacuum products service life may be significantly reduced without a continuing maintenance program. The severity of the application, risk potential from a component failure, and experience with any known failures in the application or in similar applications should determine the frequency of inspections and the servicing or replacement of Pneumatic Division products so that products are replaced before any failure occurs. A maintenance program must be established and followed by the user and, at Minimum, must include instructions 4.2 through 4.10.

4.2. Installation and Service Instructions: Before attempting to service or replace any worn or damaged parts consult the appropriate Service Bulletin for the valve or FRL in question for the appropriate practices to service the unit in question. These Service and Installation Instructions are provided with every Parker valve and FRL sold, or are available by calling 1-800-CPARKER, or by accessing the Parker web site at www.parker.com.

4.3. Lockout / Tagout Procedures: Be sure to follow all required lockout and tagout procedures when servicing equipment. For more information see: OSHA Standard – 29 CFR, Part 1910.147, Appendix A, The Control of Hazardous Energy – (Lockout / Tagout)

4.4. Visual Inspection: Any of the following conditions requires immediate system shut down and replacement of worn or damaged components:
- Air leakage: Look and listen to see if there are any signs of visual damage to any of the components in the system. Leakage is an indication of worn or damaged components.
- Damaged or degraded components: Look to see if there are any visible signs of wear or component degradation.
- Kinked, crushed, or damaged hoses. Kinked hoses can result in restricted air flow and lead to unpredictable system behavior.
- Any observed improper system or component function: Immediately shut down the system and correct malfunction.
- Excessive dirt build-up: Dirt and clutter can mask potentially hazardous situations.

Caution: Leak detection solutions should be rinsed off after use.

4.5. Routine Maintenance Issues:
- Remove excessive dirt, grime and clutter from work areas.
- Make sure all required guards and shields are in place.

4.6. Functional Test: Before initiating automatic operation, operate the system manually to make sure all required functions operate properly and safely.

4.7. Service or Replacement Intervals: It is the user's responsibility to establish appropriate service intervals. Valves, FRLs and vacuum products contain components that age, harden, wear, and otherwise deteriorate over time. Environmental conditions can significantly accelerate this process. Valves, FRLs and vacuum components need to be serviced or replaced on routine intervals. Service intervals need to be established based on:
- Previous performance experiences.
- Government and / or industrial standards.
- When failures could result in unacceptable down time, equipment damage or personal injury risk.

4.8. Servicing or Replacing of any Worn or Damaged Parts: To avoid unpredictable system behavior that can cause death, personal injury and property damage:
- Follow all government, state and local safety and servicing practices prior to service including but not limited to all OSHA Lockout Tagout procedures (OSHA Standard – 29 CFR, Part 1910.147, Appendix A, The Control of Hazardous Energy – Lockout / Tagout).
- Disconnect electrical supply (when necessary) before installation, servicing, or conversion.
- Disconnect air supply and depressurize all air lines connected to system and Pneumatic Division products before installation, service, or conversion.
- Installation, servicing, and / or conversion of these products must be performed by knowledgeable personnel who understand how pneumatic products are to be applied.
- After installation, servicing, or conversions air and electrical supplies (when necessary) should be connected and the product tested for proper function and leakage. If audible leakage is present, or if the product does not operate properly, do not put product or system into use.
- Warnings and specifications on the product should not be covered or painted over. If masking is not possible, contact your local representative for replacement labels.

4.9. Putting Serviced System Back into Operation: Follow the guidelines above and all relevant Installation and Maintenance Instructions supplied with the valve FRL or vacuum component to insure proper function of the system.

Offer of Sale

The goods, services or work (referred to as the "Products") offered by **Parker-Hannifin Corporation**, its subsidiaries, groups, divisions, and authorized distributors ("Seller") are offered for sale at prices indicated in the offer, or as may be established by Seller. The offer to sell the Products and acceptance of Seller's offer by any customer ("Buyer") is contingent upon, and will be governed by all of the terms and conditions contained in this Offer of Sale. Buyer's order for any Products specified in Buyer's purchase document or Seller's offer, proposal or quote ("Quote") attached to the purchase order, when communicated to Seller verbally, or in writing, shall constitute acceptance of this offer.

1. Terms and Conditions. Seller's willingness to offer Products for sale or accept an order for Products is subject to the terms and conditions contained in this Offer of Sale or any newer version of the same, published by Seller electronically at www.parker.com/saleterms/. Seller objects to any contrary or additional terms or conditions of Buyer's order or any other document or other communication issued by Buyer.

2. Price; Payment. Prices stated on Seller's Quote are valid for thirty (30) days, except as explicitly otherwise stated therein, and do not include any sales, use, or other taxes or duties unless specifically stated. Seller reserves the right to modify prices to adjust for any raw material price fluctuations. Unless otherwise specified by Seller, all prices are F.C.A. Seller's facility (INCOTERMS 2010). Payment is subject to credit approval and payment for all purchases is due thirty (30) days from the date of invoice (or such date as may be specified by Seller's Credit Department). Unpaid invoices beyond the specified payment date incur interest at the rate of 1.5% per month or the maximum allowable rate under applicable law.

3. Shipment; Delivery; Title and Risk of Loss. All delivery dates are approximate. Seller is not responsible for damages resulting from any delay. Regardless of the manner of shipment, delivery occurs and title and risk of loss or damage pass to Buyer, upon placement of the Products with the shipment carrier at Seller's facility. Unless otherwise stated, Seller may exercise its judgment in choosing the carrier and means of delivery. No deferment of shipment at Buyers' request beyond the respective dates indicated will be made except on terms that will indemnify, defend and hold Seller harmless against all loss and additional expense. Buyer shall be responsible for any additional shipping charges incurred by Seller due to Buyer's acts or omissions.

4. Warranty. Seller warrants that the Products sold hereunder shall be free from defects in material or workmanship for a period of twelve (12) months from the date of delivery or 2,000 hours of normal use, whichever occurs first. All prices are based upon the exclusive limited warranty stated above, and upon the following disclaimer: DISCLAIMER OF WARRANTY: THIS WARRANTY IS THE SOLE AND ENTIRE WARRANTY PERTAINING TO PRODUCTS PROVIDED. SELLER DISCLAIMS ALL OTHER WARRANTIES, EXPRESS AND IMPLIED, INCLUDING DESIGN, MERCHANTABILITY AND FITNESS FOR A PARTICULAR PURPOSE.

5. Claims; Commencement of Actions. Buyer shall promptly inspect all Products upon receipt. No claims for shortages will be allowed unless reported to the Seller within ten (10) days of delivery. No other claims against Seller will be allowed unless asserted in writing within thirty (30) days after delivery. Buyer shall notify Seller of any alleged breach of warranty within thirty (30) days after the date the defect is or should have been discovered by Buyer. Any claim or action against Seller based upon breach of contract or any other theory, including tort, negligence, or otherwise must be commenced within twelve (12) months from the date of the alleged breach or other alleged event, without regard to the date of discovery.

6. LIMITATION OF LIABILITY. IN THE EVENT OF A BREACH OF WARRANTY, SELLER WILL, AT ITS OPTION, REPAIR OR REPLACE A DEFECTIVE PRODUCT, OR REFUND THE PURCHASE PRICE WITHIN A REASONABLE PERIOD OF TIME. **IN NO EVENT IS SELLER LIABLE FOR ANY SPECIAL, INDIRECT, INCIDENTAL OR CONSEQUENTIAL DAMAGES ARISING OUT OF, OR AS THE RESULT OF, THE SALE, DELIVERY, NON-DELIVERY, SERVICING, USE OR LOSS OF USE OF THE PRODUCTS OR ANY PART THEREOF, OR FOR ANY CHARGES OR EXPENSES OF ANY NATURE INCURRED WITHOUT SELLER'S WRITTEN CONSENT, WHETHER BASED IN CONTRACT, TORT OR OTHER LEGAL THEORY. IN NO EVENT SHALL SELLER'S LIABILITY UNDER ANY CLAIM MADE BY BUYER EXCEED THE PURCHASE PRICE OF THE PRODUCTS.**

7. User Responsibility. The user, through its own analysis and testing, is solely responsible for making the final selection of the system and Product and assuring that all performance, endurance, maintenance, safety and warning requirements of the application are met. The user must analyze all aspects of the application and follow applicable industry standards and Product information. If Seller provides Product or system options based upon data or specifications provided by the user, the user is responsible for determining that such data and specifications are suitable and sufficient for all applications and reasonably foreseeable uses of the Products or systems.

8. Loss to Buyer's Property. Any designs, tools, patterns, materials, drawings, confidential information or equipment furnished by Buyer or any other items which become Buyer's property, will be considered obsolete and may be destroyed by Seller after two (2) consecutive years have elapsed without Buyer ordering the items manufactured using such property. Seller shall not be responsible for any loss or damage to such property while it is in Seller's possession or control.

9. Special Tooling. A tooling charge may be imposed for any special tooling, including without limitation, dies, fixtures, molds and patterns, acquired to manufacture Products. Such special tooling shall be and remain Seller's property notwithstanding payment of any charges by Buyer. In no event will Buyer acquire any interest in apparatus belonging to Seller which is utilized in the manufacture of the Products, even if such apparatus has been specially converted or adapted for such manufacture and notwithstanding any charges paid by Buyer. Unless otherwise agreed, Seller has the right to alter, discard or otherwise dispose of any special tooling or other property in its sole discretion at any time.

10. Buyer's Obligation; Rights of Seller. To secure payment of all sums due or otherwise, Seller retains a security interest in all Products delivered to Buyer and this agreement is deemed to be a Security Agreement under the Uniform Commercial Code. Buyer authorizes Seller as its attorney to execute and file on Buyer's behalf all documents Seller deems necessary to perfect its security interest.

11. Improper Use and Indemnity. Buyer shall indemnify, defend, and hold Seller harmless from any losses, claims, liabilities, damages, lawsuits, judgments and costs (including attorney fees and defense costs), whether for personal injury, property damage, patent, trademark or copyright infringement or any other claim, brought by or incurred by Buyer, Buyer's employees, or any other person, arising out of: (a) improper selection, application, design, specification or other misuse of Products purchased by Buyer from Seller; (b) any act or omission, negligent or otherwise, of Buyer; (c) Seller's use of patterns, plans, drawings, or specifications furnished by Buyer to manufacture Products; or (d) Buyer's failure to comply with these terms and conditions. Seller shall not indemnify Buyer under any circumstance except as otherwise provided.

12. Cancellations and Changes. Buyer may not cancel or modify or cancel any order for any reason, except with Seller's written consent and upon terms that will indemnify, defend and hold Seller harmless against all direct, incidental and consequential loss or damage. Seller may change Product features, specifications, designs and availability.

13. Limitation on Assignment. Buyer may not assign its rights or obligations under this agreement without the prior written consent of Seller.

14. Force Majeure. Seller does not assume the risk and is not liable for delay or failure to perform any of Seller's obligations by reason of events or circumstances beyond its reasonable control (hereinafter "Events of Force Majeure"). Events of Force Majeure shall include without limitation: accidents, strikes or labor disputes, acts of any government or government agency, acts of nature, delays or failures in delivery from carriers or suppliers, shortages of materials, or any other cause beyond Seller's reasonable control.

15. Waiver and Severability. Failure to enforce any provision of this agreement will not invalidate that provision; nor will any such failure prejudice Seller's right to enforce that provision in the future. Invalidation of any provision of this agreement by legislation or other rule of law shall not invalidate any other provision herein. The remaining provisions of this agreement will remain in full force and effect.

16. Termination. Seller may terminate this agreement for any reason and at any time by giving Buyer thirty (30) days prior written notice. Seller may immediately terminate this agreement, in writing, if Buyer: (a) breaches any provision of this agreement (b) appoints a trustee, receiver or custodian for all or any part of Buyer's property (c) files a petition for relief in bankruptcy on its own behalf, or one if filed by a third party (d) makes an assignment for the benefit of creditors; or (e) dissolves its business or liquidates all or a majority of its assets.

17. Governing Law. This agreement and the sale and delivery of all Products are deemed to have taken place in, and shall be governed and construed in accordance with, the laws of the State of Ohio, as applicable to contracts executed and wholly performed therein and without regard to conflicts of laws principles. Buyer irrevocably agrees and consents to the exclusive jurisdiction and venue of the courts of Cuyahoga County, Ohio with respect to any dispute, controversy or claim arising out of or relating to this agreement.

18. Indemnity for Infringement of Intellectual Property Rights. Seller is not liable for infringement of any patents, trademarks, copyrights, trade dress, trade secrets or similar rights except as provided in this Section. Seller will defend and indemnify Buyer against allegations of infringement of U.S. patents, U.S. trademarks, copyrights, trade dress and trade secrets ("Intellectual Property Rights"). Seller will defend at its expense and will pay the cost of any settlement or damages awarded in an action brought against Buyer based on an allegation that a Product sold pursuant to this agreement infringes the Intellectual Property Rights of a third party. Seller's obligation to defend and indemnify Buyer is contingent on Buyer notifying Seller within ten (10) days after Buyer becomes aware of such allegations of infringement, and Seller having sole control over the defense of any allegations or actions including all negotiations for settlement or compromise. If a Product is subject to a claim that it infringes the Intellectual Property Rights of a third party, Seller may, at its sole expense and option, procure for Buyer the right to continue using the Product, replace or modify the Product so as to make it noninfringing, or offer to accept return of the Product and refund the purchase price less a reasonable allowance for depreciation. Notwithstanding the foregoing, Seller is not liable for claims of infringement based on information provided by Buyer, or directed to Products delivered hereunder for which the designs are specified in whole or part by Buyer, or infringements resulting from the modification, combination or use in a system of any Product sold hereunder. The foregoing provisions of this Section constitute Seller's sole and exclusive liability and Buyer's sole and exclusive remedy for infringement of Intellectual Property Rights.

19. Entire Agreement. This agreement contains the entire agreement between the Buyer and Seller and constitutes the final, complete and exclusive expression of the terms of sale. All prior or contemporaneous written or oral agreements or negotiations with respect to the subject matter are herein merged. The terms contained herein may not be modified unless in writing and signed by an authorized representative of Seller.

20. Compliance with Laws. Buyer agrees to comply with all applicable laws, regulations, and industry and professional standards of care, including those of the United Kingdom, the United States of America, and the country or countries in which Buyer may operate, including without limitation the U. K. Bribery Act, the U.S. Foreign Corrupt Practices Act ("FCPA"), the U.S. Anti-Kickback Act ("Anti-Kickback Act") and the U.S. Food Drug and Cosmetic Act ("FDCA"),each as currently amended, and the rules and regulations promulgated by the U.S. Food and Drug Administration ("FDA"), and agrees to indemnify and hold harmless Seller from the consequences of any violation of such provisions by Buyer, its employees or agents. Buyer acknowledges that it is familiar with the provisions of the U. K. Bribery Act, the FCPA, the FDA, and the Anti-Kickback Act, and certifies that Buyer will adhere to the requirements thereof. In particular, Buyer represents and agrees that Buyer will not make any payment or give anything of value, directly or indirectly to any governmental official, any foreign political party or official thereof, any candidate for foreign political office, or any commercial entity or person, for the purpose of influencing such person to purchase Products or otherwise benefit the business of Seller.

05/14

Parker Hannifin Corporation
Pneumatic Division
Richland, Michigan
www.parker.com/globalfrl

Parker Worldwide

AE – UAE, Dubai
Tel: +971 4 8127100
parker.me@parker.com

AR – Argentina, Buenos Aires
Tel: +54 3327 44 4129

AT – Austria, Wiener Neustadt
Tel: +43 (0)2622 23501-0
parker.austria@parker.com

AT – Eastern Europe,
Wiener Neustadt
Tel: +43 (0)2622 23501 900
parker.easteurope@parker.com

AU – Australia, Castle Hill
Tel: +61 (0)2-9634 7777

AZ – Azerbaijan, Baku
Tel: +994 50 2233 458
parker.azerbaijan@parker.com

BE/LU – Belgium, Nivelles
Tel: +32 (0)67 280 900
parker.belgium@parker.com

BR – Brazil, Cachoeirinha RS
Tel: +55 51 3470 9144

BY – Belarus, Minsk
Tel: +375 17 209 9399
parker.belarus@parker.com

CA – Canada, Milton, Ontario
Tel: +1 905 693 3000

CH – Switzerland, Etoy
Tel: +41 (0) 21 821 02 30
parker.switzerland@parker.com

CL – Chile, Santiago
Tel: +56 2 623 1216

CN – China, Shanghai
Tel: +86 21 2899 5000

CZ – Czech Republic, Klecany
Tel: +420 284 083 111
parker.czechrepublic@parker.com

DE – Germany, Kaarst
Tel: +49 (0)2131 4016 0
parker.germany@parker.com

DK – Denmark, Ballerup
Tel: +45 43 56 04 00
parker.denmark@parker.com

ES – Spain, Madrid
Tel: +34 902 330 001
parker.spain@parker.com

FI – Finland, Vantaa
Tel: +358 (0)20 753 2500
parker.finland@parker.com

FR – France, Contamine s/Arve
Tel: +33 (0)4 50 25 80 25
parker.france@parker.com

GR – Greece, Athens
Tel: +30 210 933 6450
parker.greece@parker.com

HK – Hong Kong
Tel: +852 2428 8008

HU – Hungary, Budapest
Tel: +36 1 220 4155
parker.hungary@parker.com

IE – Ireland, Dublin
Tel: +353 (0)1 466 6370
parker.ireland@parker.com

IN – India, Mumbai
Tel: +91 22 6513 7081-85

IT – Italy, Corsico (MI)
Tel: +39 02 45 19 21
parker.italy@parker.com

JP – Japan, Tokyo
Tel: +(81) 3 6408 3901

KR – South Korea, Seoul
Tel: +82 2 559 0400

KZ – Kazakhstan, Almaty
Tel: +7 7272 505 800
parker.easteurope@parker.com

LV – Latvia, Riga
Tel: +371 6 745 2601
parker.latvia@parker.com

MX – Mexico, Apodaca
Tel: +52 81 8156 6000

MY – Malaysia, Shah Alam
Tel: +60 3 7849 0800

NL – The Netherlands,
Oldenzaal
Tel: +31 (0)541 585 000
parker.nl@parker.com

NO – Norway, Ski
Tel: +47 64 91 10 00
parker.norway@parker.com

NZ – New Zealand, Mt Wellington
Tel: +64 9 574 1744

PL – Poland, Warsaw
Tel: +48 (0)22 573 24 00
parker.poland@parker.com

PT – Portugal, Leca da Palmeira
Tel: +351 22 999 7360
parker.portugal@parker.com

RO – Romania, Bucharest
Tel: +40 21 252 1382
parker.romania@parker.com

RU – Russia, Moscow
Tel: +7 495 645-2156
parker.russia@parker.com

SE – Sweden, Spånga
Tel: +46 (0)8 59 79 50 00
parker.sweden@parker.com

SG – Singapore
Tel: +65 6887 6300

SK – Slovakia, Banská Bystrica
Tel: +421 484 162 252
parker.slovakia@parker.com

SL – Slovenia, Novo Mesto
Tel: +386 7 337 6650
parker.slovenia@parker.com

TH – Thailand, Bangkok
Tel: +662 717 8140

TR – Turkey, Istanbul
Tel: +90 216 4997081
parker.turkey@parker.com

TW – Taiwan, Taipei
Tel: +886 2 2298 8987

UA – Ukraine, Kiev
Tel +380 44 494 2731
parker.ukraine@parker.com

UK – United Kingdom,
Warwick
Tel: +44 (0)1926 317 878
parker.uk@parker.com

US – USA, Cleveland
Tel: +1 216 896 3000

VE – Venezuela, Caracas
Tel: +58 212 238 5422

ZA – South Africa,
Kempton Park
Tel: +27 (0)11 961 0700
parker.southafrica@parker.com

© 2010 Parker Hannifin Corporation. All rights reserved.

Catalog 0750-3 US. November, 2014

Parker Hannifin Corporation
Pneumatic Division
8676 E. M89
P.O. Box 901
Richland, MI 49083 USA
Tel: 269 629 5000
Fax: 269 629 5385

Applications Engineering
Phone: 877 321 4PDN Option #2
E-mail: pdnapps@parker.com
Customer Support
Phone: 877 321 4PDN Option #1
E-mail: pdncustsvc@parker.com
Web site: www.parker.com/globalfrl

Authorized Distributor

800-525-9085
www.mfcpinc.com

MFCP Motion & Flow Control Products, Inc.