aerospace
climate control
electromechanical
filtration
fluid & gas handling
hydraulics
pneumatics
process control
sealing & shielding

Hydraulic Accumulator Products and Accessories

Catalog HY10-1630/US

Parker

ENGINEERING YOUR SUCCESS.

Rockford, Illinois
10711 N Second Street, Rockford, IL 61115

Santa Fe Springs, California
14087 Borate Street
Santa Fe Springs, CA 90670

Hellaby, Rotherham
Barbatos Way, Hellaby
Industrial Estate, Roterham,
South Yorkshire, S66 8RX

If you have questions about the products contained in this catalog, or their applications, please contact:

Global Accumulator Division
phone **815 636 4100**
fax **815 636 4111**
parker.com/accumulator

Extra care is taken in the preparation of this literature, but Parker is not responsible for any inadvertent typographical errors or omissions. Information in this catalog is only accurate as of the date of publication. For a more current information base, please consult the Parker Accumulator Division web site at **www.parker.com/accumulator.**

Offer of Sale

The items described in this document are hereby offered for sale by Parker Hannifin Corporation, its subsidiaries or its authorized distributors. This offer and its acceptance are governed by the provisions in the **"Offer of Sale."**

NOTE: Failure or improper selection or improper use of accumulators or related items can cause death, personal injury and property damage. Parker Hannifin shall not be liable for any incidental, consequential or special damages that result from use of the information contained in this publication.

⚠WARNING

FAILURE OR IMPROPER SELECTION OR IMPROPER USE OF THE PRODUCTS AND/OR SYSTEMS DESCRIBED HEREIN OR RELATED ITEMS CAN CAUSE DEATH, PERSONAL INJURY AND PROPERTY DAMAGE.

This document and other information from Parker Hannifin Corporation, its subsidiaries and authorized distributors provide product and/or system options for further investigation by users having expertise. It is important that you analyze all aspects of your application, including consequences of any failure and review the information concerning the product or system in the current product catalog. Due to the variety of operating conditions and applications for these products or systems, the user, through its own analysis and testing, is solely responsible for making the final selection of the products and systems and assuring that all performance, safety and warning requirements of the application are met.

The products described herein, including without limitation, product features, specifications, designs, availability and pricing, are subject to change by Parker Hannifin Corporation and its related companies at any time without notice.

© Copyright 2012, Parker Hannifin Corporation. All rights reserved.

Contents

Introduction **3**
Industry-Leading Experience and Capabilities **4**
Certifications for Global Requirements **6**
Selecting and Applying Accumulators **8**
- Design Features and Construction 9
- Operation 10
- Accumulator Selection 11
- Gas Bottle Installations 14
- Large/Multiple Accumulators 15
- Precharging 16
- Failure Prevention 19

Solutions for Oil & Gas and Power Generation **20**
Solutions for Mobile Applications **22**
Parker (inPHorm™) Software **24**
Piston Accumulators **25**
- Series 2000 & 3000 28
- ACP Piston Accumulators 37
- Series 4000 & 5000 43

Bladder Accumulators **51**
- Bottom Repairable 54
- Top Repairable 55
- High-flow 56
- Transfer Barrier 57
- Gas Bottles 58

Diaphragm Accumulators **65**
Inline Pulse-Tone™ Hydraulic Shock Suppressors **71**
- 3000 PSI 75
- 5000 PSI 77

Large Gas Bottles **81**
SBA Accumulator Safety Blocks **85**
Accumulator Accessories **97**
KleenVent KV Series Hydraulic Reservoir Isolators **109**
SurgeKushons **113**
Maintenance Instructions **121**
- Piston Accumulators 121
- Bladder Accumulators 131
- Diaphragm Accumulators 145
- Pulse-Tone™ Inline Surge Suppressors 149

Offer of Sale **156**

OIL AND GAS

CONSTRUCTION

WIND POWER

FORESTRY

UTILITY

AGRICULTURE

INJECTION MOLDING

MILITARY

SOLAR POWER

RENEWABLE ENERGY

MINING

MOBILE

Our piston accumulators meet special requirements including high pressure (20,000 PSI and up), large bore (25" and larger), and fabrication with such materials as stainless steel and new composite technology.

With Greer expertise as part of today's Parker advantage for the oil and gas industry, we are a major supplier of 10-, 11- and 15-gallon bladder accumulators with pressure capabilities up to 6,600 PSI.

Parker offers a complete line of accessories that complement and enhance the accumulator operation.

Hydro-pneumatic accumulators are the most widely used type of accumulator in industrial and mobile hydraulic systems. They use compressed gas to apply force to hydraulic fluid.

Identical in their operating principle, Parker's piston, bladder and diaphragm accumulators use different mechanisms to separate the gas from the fluid. It is this difference – and the resulting performance characteristics – which determines the appropriate style accumulator for different applications.

Adding an accumulator to a hydraulic system can:

- **improve system efficiency**
- **absorb shock**
- **supplement pump delivery**
- **provide emergency power**
- **compensate for leakage**
- **maintain pressure**
- **dispense fluid**
- **compensate for slow component response**

Industry-Leading Experience and Capabilities

With more years of experience than any other name, Parker Hannifin's Global Accumulator Division is the industry leader in accumulator solutions for energy optimization.

We supply the broadest hydro-pneumatic accumulator product line, including pistons, bladders and diaphragms. In fact, the well-known Greer bladder accumulator line is part of today's Parker advantage. As a result, without limitations or bias, we recommend and supply the best engineered solution based on your application.

Quick turnaround and highest quality are assured by Parker's lean manufacturing principles and state-of-the-industry processes.

You can depend on Parker's unmatched strengths in:

- **state-of-the-art technology**
- **lean processes resulting in reduced lead times**
- **the industry's top technicians and professionals**
- **leadership in engineered custom-design work**
- **certification capabilities for today's global demands**

Superior technology and lean manufacturing
Years of lean manufacturing principles allow us to turn your order around quickly and efficiently. We use highly flexible automation, high-precision injection molding machines and robotic machining cells to produce the highest-quality bladder and piston accumulators. Every accumulator is pressure tested to world-class quality standards before it ships to the customer.

Leading engineered custom design
Due to our strong engineering capabilities, you can also look to Parker first for custom-design initiatives and solutions, including:

- **efficient modification of standard designs to your specifications**
- **custom rubber compression molding capabilities**
- **all grades of steel, stainless steel and exotic materials, as well as advanced performance materials**
- **temperature pressure and positioning sensors technology**
- **special mounting, including bank (rack) configurations of multiple accumulators**

The Integrated Accumulator Manifold is one of many Parkers engineered solutions.

Total assurance, from evaluation to delivery
As a major industry supplier of all three types of accumulators, we first evaluate your needs and opportunities to increase the performance, efficiency and value of your product. We recommend the ideal solution based on your specific situation and criteria. We then ensure that your accumulators are manufactured with the best-grade materials to the highest industry standards. And we provide the required labeling, specially designed packaging and shipping containers to meet today's critical safety and environmental regulations.

Expertise in advanced-performance solutions
For leading-edge performance in your products or systems, today and tomorrow, continually look to Parker for advanced solutions, including:

- **composite accumulators – for valuable weight savings and resistance to corrosion**
- **accumulator systems – multiple accumulator bank/ rack configurations, including manifolds and frames**
- **pulsation and shock dampening devices – reducing noise as well as component wear and leakage**
- **gas struts**
- **integrated accumulator manifolds**
- **high-pressure accumulators**
- **Extreme Seal**
- **reservoir isolation**

Performing impressively, the world over
From low-pressure pilot circuits to high-pressure offshore systems, Parker accumulators are essential to mobile and industrial equipment. For our superior capabilities, experience and service, major OEMs have made us their supplier of choice.

Accumulator composites consist of two or more materials constituting a stiffer, stronger "reinforcement" phase and a shell or "matrix" phase. Parker's epoxy/carbon composite has a tensile strength of about 300,000 psi versus a typical steel design's 85,000 psi.

The wide spectrum of customers we serve includes manufacturers of:

- **construction machinery**
- **transportation vehicles**
- **farm machinery and equipment**
- **oil and gas field machinery**
- **offshore equipment**
- **industrial trucks and tractors**
- **specialized industrial machines**
- **process control valves**
- **power generation equipment**
- **motion simulation systems**

See for yourself why Parker is the trusted supplier to a major share of today's accumulator market. Also count on our worldwide service, distribution and sales network to keep us responsive and accessible to you anywhere, anytime.

Parker accumulator customers have the leading advantage of our:

- **sales and service offices located globally**
- **worldwide distribution network**
- **manufacturing facilities on five continents**
- **emergency delivery with a toll-free call**
- **inPHorm™ sizing and selection software**
- **instant information at www.parker.com/accumulator**

For the details and assistance you need to put our strengths to work for your operations, contact Parker's Global Accumulator Division.

Certifications for Global Requirements

Certifications for accumulators vary – often quite significantly – depending upon the application they will be used for and the country they will be used in. Sorting through the myriad of requirements that may be encountered is a daunting and difficult task. A truly global certification standard, meanwhile, remains all but impossible to achieve due to the parameters that must be met for individual country regulations. Parker's Global Accumulator Division engineers have extensively researched and fully understand these pressure vessel codes. From the United States to Europe, Asia and Australia, our experts are ready and able to help you avoid the many costly and time-consuming pitfalls you didn't see coming. Furthermore, GAD can provide the global accumulator certifications you need.

Accumulators and gas bottles are pressure vessels that are subject to safety laws, regulations, and ordinances that are valid in the state or country of installation. Other particular regulations must be observed in certain industries such as mining, shipbuilding and aircraft. This Brief will discuss the two fundamental design codes and several of the most common certifications. Since many more certifications exist, we recommend contacting Parker's Global Accumulator Division engineers to insure proper conformance to those standards.

Two Base Design Codes

While many countries have their own regulations and quality standards for hydraulic accumulators, most refer back to one of two base design codes. The oldest and most referenced design code for pressure vessels is ASME. Originally written to create a standard for the manufacture of boilers on steam locomotives, the American Society of Mechanical Engineers (ASME) Boiler and Pressure Vessel Code Section VIII, Division 1 has evolved into requirements for unfired pressure vessels and accumulators in the United States. This section requires the following:

1. **Certification on vessels with internal diameters of 6" or greater.**
2. **Certified vessels carry the "U" symbol on them as evidence that they were designed and manufactured in accordance with the Code. The "U" symbol is an internationally recognized symbol of design and manufacturing quality.**
3. **Accumulators must be manufactured from materials that meet ASME specifications for traceability.**
4. **A design factor of 4:1 in the ratio of minimum burst pressure to rated pressure. All design factors are with respect to the specified minimum tensile strength of the material.**
5. **ASME requires that each vessel be marked with the design pressure at the Minimum Design Metal Temperature (MDMT) for the vessel.**
6. **Surveillance of an approved quality system, like ISO 9001.**
7. **All hydrostatic testing to be witnessed by a recognized authorized inspection agency.**

The 4:1 design factor requirement is mandatory for all accumulators with ASME Certification with the exception of those that comply with a specific rule within the Code called "Appendix 22." Appendix 22 permits that accumulators manufactured with "forged" shells and with openings of a specified maximum size may be certified with a design factor of 3:1 in the ratio of burst pressure to rated pressure. This includes bladder style accumulators.

The second base design code is the European Pressure Equipment Directive. In May 2002, the Directive 97/23/EC (Pressure Equipment Directive) came into regulation in the European Union. This Directive applies to the design, manufacture, testing and conformity assessment of pressure equipment and assemblies of pressure equipment that operate over 0.5 bar. The directive requires the following:

1. **The operating fluids must be in Group 2 (non-hazardous).**
2. **Certified vessels with a volume greater than 1 liter gas capacity must be CE marked.**

3. **Certified vessels must be manufactured from materials that meet PED specifications for traceability.**
4. **Certified product must pass a low temperature Charpy test (temperature to be determined by application or customer).**
5. **Surveillance of an approved quality system, such as ISO 9001.**
6. **All hydrostatic testing to be witnessed by an approved notified body. Parker holds module H1 certification – allowing us to self certify accumulators saving our customers time and money.**
7. **Once installed, equipment and accumulator inspection as well as operational safety are controlled by national laws.**

Accumulators with a volume less than 1 liter, of gas capacity, fall within the guidelines of Sound Engineering Practice (SEP). Accumulators built to SEP must be built to a known standard and have an approved notified body approve the design and the technical file. These accumulators DO NOT carry a CE marking.

Country Certifications

Below is a brief list of the most popular country standards that Parker GAD can provide:

1. **Canada:** Canadian Registration Numbers (CRN) can be obtained by constructing an accumulator from ASME-certified material using ASME standards of design then applying for the registration number. Each province has its own registration number, thus the end destination of the accumulator must be known. Some provinces are allowing alternative design codes like the PED for specific markets such as farming and mining. Contact Parker GAD for detailed specifics.

2. **Australia:** AS1210 is a standard based on ASME design requirements. Additional hydrostatic testing is required. The accumulator must be tested at 1.5 times the design pressure for 30 minutes plus an additional 1 minute per mm of thickness of the shell/vessel.

3. **China:** Accumulators shipped to China often require Special Equipment Licensing Office (SELO) approval. China currently accepts both PED and ASME design standards. To manufacture accumulators for the Chinese marketplace, a manufacturing license is required. Paperwork both before and after the purchase of the accumulator is required for submittal to China for tracking purposes.

4. **Russia:** Accumulators shipped to Russia often require GOST approval. GOST currently accepts both PED and ASME design standards. A technical file called a "passport" must be submitted with each accumulator shipment.

5. **Brazil:** The Regulatory Rule NR-13 establishes the minimum conditions for the installation, operation, maintenance and inspection of pressure vessels and boilers in Brazil. Both ASME and the PED are acceptable design codes, but ASME designs are more prevalent. When NR-13 is required, Parker's engineers can submit a technical file to Brazilian Registered Engineers (BRE) for approval. After approval, an inspection at the place of installation will be performed by the BRE. This could also include hydrostatic testing.

Industry/Market Standards

1. **American Bureau of Shipping (ABS):** Is required for accumulators installed on shipping vessels and oil rigs. To be added to a Product Design Assessment Certificate, accumulators must meet ASME design requirements plus any additional ABS requirements. Parker has an ABS Certificate of Manufacturing Assessment and many accumulators are listed on the Bureau's List of Type Approved Products. All ABS-approved accumulators must be witness tested at Parker by an ABS inspector.

2. **Det Norske Veritas (DNV):** Off-shore Standard DNV-OS-E101 is often required for accumulators on off-shore oil and gas applications, particularly in the North Sea. Many of Parker's accumulators have DNV Type Approval.

Additional Information

GAD also offers dual-certified ASME/CE accumulators. No matter where you need to be, Parker's Global Accumulator Division will be there to support you with the necessary products, services and global certifications.

Selecting and Applying Accumulators

In industrial and mobile applications, three types of hydro-pneumatic accumulators – piston, bladder and diaphragm – are used. Each has particular advantages and limitations which should be considered when selecting an accumulator for a specific application.

Bladder/Diaphragm accumulators are generally preferred for applications where rapid cycling, high fluid contamination and fast response times are required. They provide excellent gas/fluid separation.

Piston accumulators offer greater efficiency and flexibility in most applications, due to their wider range of sizes. Parker's piston accumulators feature a five-blade V-O-ring which maintains full contact between the piston and the bore, without rolling. Sealing remains effective even under rapid cycling at high operating pressures.

MAKING THE RIGHT CHOICE – SUMMARY TABLE			
	PISTON	**BLADDER**	**DIAPHRAGM**
PRECHARGE SENSING	Yes	No	No
Flow Rate	Highest	Avg/Med	Low
Temperature Tolerance Range	Highest	High	Avg/Med
OUTPUT/COMPRESSION RATIOS	**HIGH**	**≤ 4:1**	**4:1 TO 8:1**
Serviceability	High	High	Non-Repairable
Dirt Tolerance	Low	High	High
Response Time	See Fig. 4 & 5	Quick	Quick
Water Tolerance	Avg/Med	High	—
Low Lubricity Fluid Tolerance	Avg/Med	High	High
Weight	Size Dependent	Size Dependent	Lightest
OP PRESSURES	**UP TO 30,000 PSI**	**UP TO 6600 PSI***	**UP TO 3600 PSI**
Failure Mode	Progressive	Sudden	Sudden
Size/Envelope	Custom Length/Diameters	One Choice Per Capacity	One Choice Per Capacity

* With ASME Appendix 22

Note: Failure or improper selection or improper use of accumulators or related items can cause death, personal injury and property damage. Parker Hannifin shall not be liable for any incidental, consequential or special damages that result from use of the information contained in this publication.

Design Features and Construction

Bladder accumulators
Parker's bladder accumulators feature a non-pleated, flexible rubber bladder housed within a steel shell. A steel gas valve is molded on the top of the bladder. A poppet valve, normally held open by spring force, prevents the bladder from extruding through the port when the bladder is fully expanded in the shell. Parker's bladder accumulators are available as either top or bottom repairable units, for optimum flexibility.

Diaphragm accumulators
Parker's diaphragm accumulators feature a one-piece molded diaphragm which is mechanically sealed to the high strength metal shell. The flexible diaphragm provides excellent gas and fluid separation. The non-repairable electron-beam welded construction reduces size, weight, and ultimately cost.

The bladder/diaphragm is charged with a dry inert gas, such as high purity nitrogen, to a set precharge pressure determined by the system requirements. As system pressure fluctuates, the bladder/diaphragm expands and contracts to discharge fluid from, or allow fluid into, the accumulator shell.

Piston accumulators
Parker's piston accumulators consist of a cylindrical body, sealed by a gas cap and charging valve at the gas end, and by a hydraulic cap at the opposite end. A lightweight piston separates the gas side of the accumulator from the hydraulic side.

As with the bladder/diaphragm accumulator, the gas side is charged with high purity nitrogen to a predetermined pressure. Changes in system pressure cause the piston to glide up and down along the shell, allowing fluid to enter or forcing it to be discharged from the accumulator body.

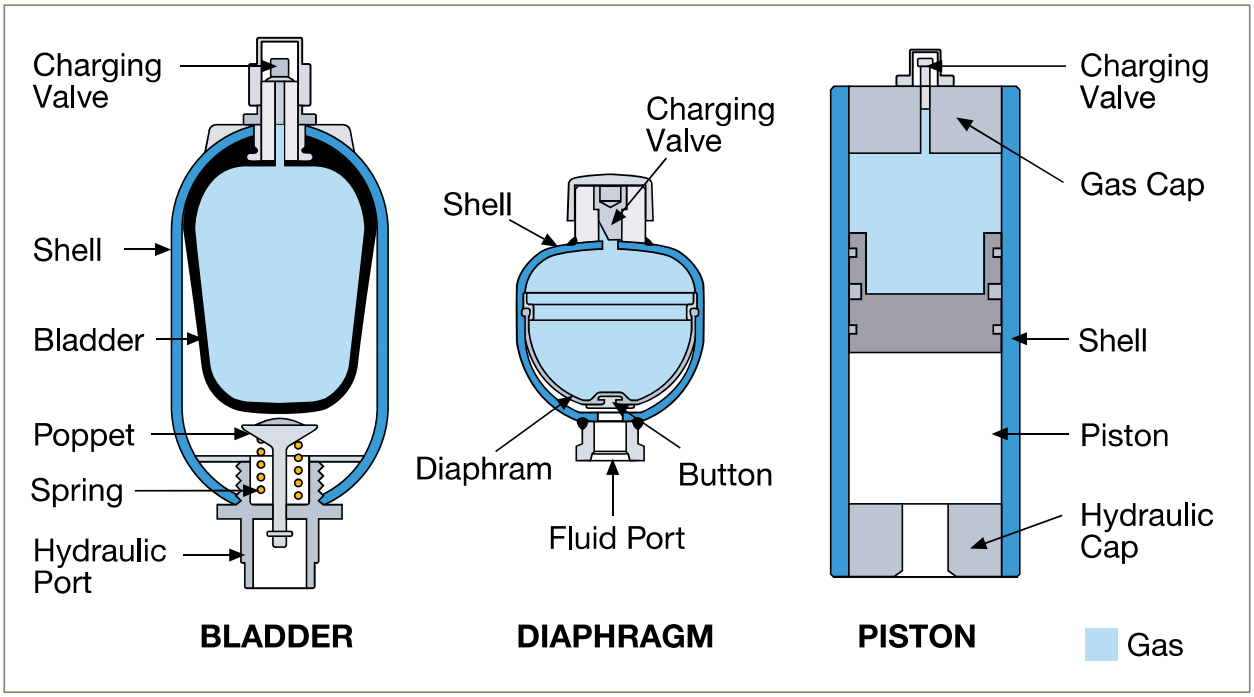

Fig. 1 Typical bladder, diaphragm and piston accumulator cross section

Operation

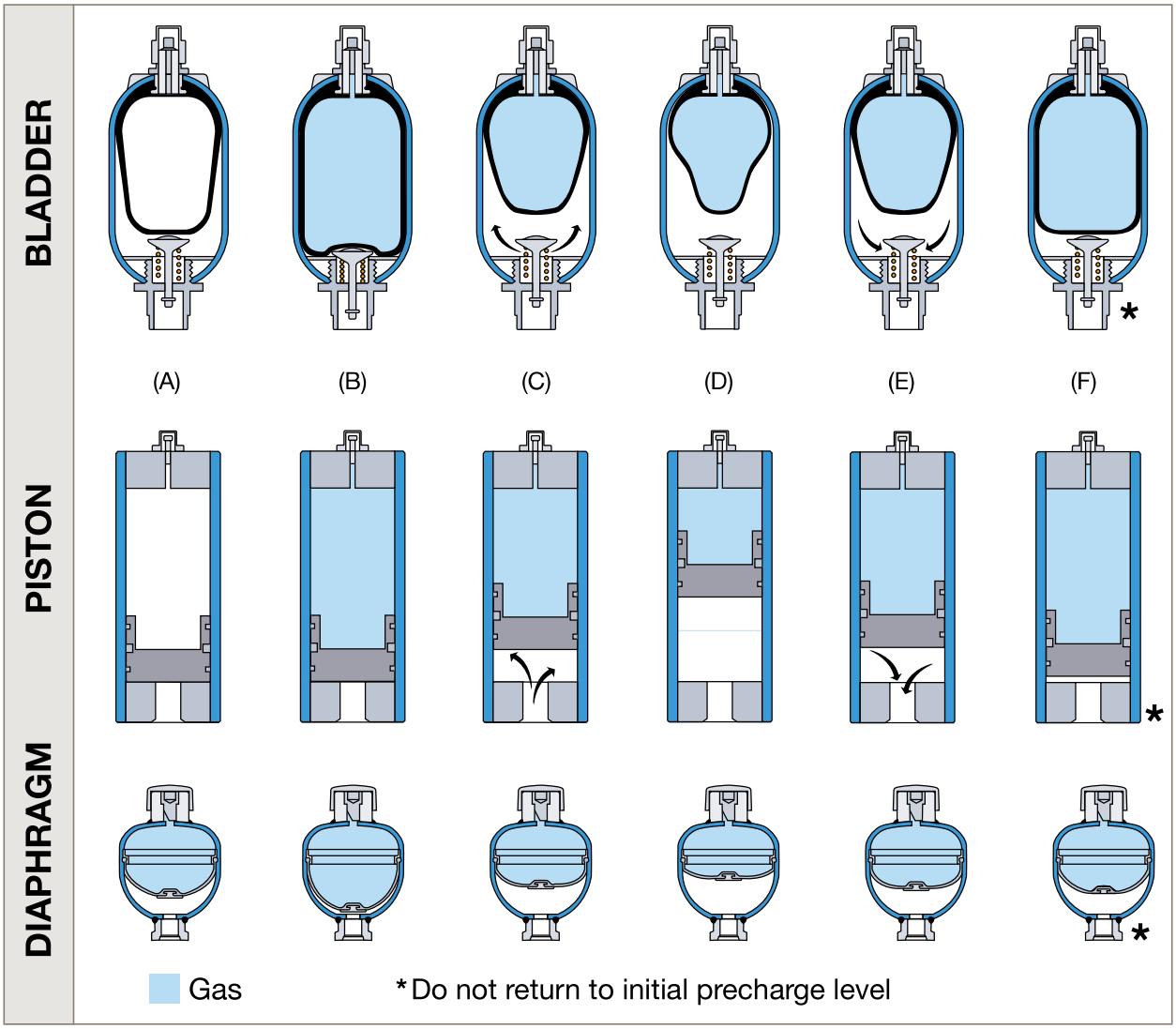

Fig. 2 Operating conditions of bladder, piston, and diaphragm style accumulators

Stage A
The accumulator is empty, and neither gas nor hydraulic sides are pressurized.

Stage B
The accumulator is precharged.

Stage C
The hydraulic system is pressurized. As system pressure exceeds gas precharge hydraulic pressure fluid flows into the accumulator.

Stage D
System pressure peaks. The accumulator is filled with fluid to its design capacity. Any further increase in hydraulic pressure is prevented by a relief valve in the hydraulic system.

Stage E
System pressure falls. Precharge pressure forces fluid from the accumulator into the system.

Stage F
Minimum system pressure is reached. The accumulator has discharged its design maximum volume of fluid back into the system.

Accumulator Selection

When selecting an accumulator for a particular application, both hydraulic system and accumulator performance criteria should be considered. To ensure long and satisfactory service life, the following factors should be taken into account:

- **failure mode**
- **output volume**
- **flow rate**
- **fluid type**
- **response time**
- **shock suppression**
- **high-frequency cycling**
- **mounting position**
- **external forces**
- **sizing information**
- **certification**
- **safety**
- **temperature effect**
- **dwell time**

Table 1: Relative Outputs of a 10 Gallon Accumulator

Compression Ratio	System Pressure PSI		Recommended Precharge PSI		Fluid Output Gallons	
	max	min	Bladder	Piston	Bladder	Piston
1.5	3000	2000	1800	1900	2.79	3.00
2	3000	1500	1350	1400	4.23	4.41
3	3000	1000	900	900	5.70	5.70
6	3000	500	*	400	*	6.33

*Below recommended minimum operating ratio of 4:1

Failure modes
In certain applications, a sudden failure may be preferable to a gradual failure. A high-speed machine, for example, where product quality is a function of hydraulic system pressure. Because sudden failure is detected immediately, scrap is minimized, whereas gradual failure might mean that production of a large quantity of sub-standard product could occur before the failure became apparent. A bladder/diaphragm accumulator would be most suitable for this application.

Conversely, where continuous operation is paramount and sudden failure could be detrimental, for example, in a braking or steering circuit on mobile equipment, a progressive failure mode is desirable. In this application, a piston accumulator would be appropriate.

Output volume
The maximum available capacity of each type of accumulator determines the limits of their suitability where large output volumes are required. There are, however, several methods of achieving higher output volumes than standard accumulator capacities suggest (see Large/Multiple Accumulators, page 15).

Table 1 compares typical fluid outputs for Parker's 10-gallon piston and bladder accumulators operating isothermally as auxiliary power sources over a range of minimum system pressures. The higher precharge pressures recommended for piston accumulators result in higher outputs than from comparable bladder accumulators. Also, bladder accumulators are not generally suitable for compression ratios greater than 4:1, as these could result in excessive bladder deformation, higher gas temperature, excessive side wall wear, and eventual failure.

Piston accumulators have an inherently higher output relative to their overall dimensions, which may be critical in locations where space is limited. Piston accumulators are available in a choice of diameters and lengths for a given capacity, whereas bladder and diaphragm accumulators are frequently offered in only one size per capacity, and fewer sizes are available. Piston accumulators can also be built to custom lengths for applications in which available space is critical.

Flow rate
Table 2 shows typical maximum flow rates for Parker's accumulator styles in a range of sizes.

The larger standard bladder accumulator designs are limited to 220 GPM, although this may be increased to 600 GPM using a larger high-flow port. Flow rates greater than 600 GPM may be achieved by mounting several accumulators on a common manifold. (see Large/Multiple Accumulators, page 15).

Table 2: Maximum Recommended Accumulator Flow Rates

			GPM at 3000 PSI			
Piston Bore	Bladder Capacity	Diaphragm Capacity	Piston	Bladder Std.	Bladder High-flow	Diaphragm
2	1 qt.	.5-10 cu. in.	100	40		11
3	1 gal.	20-85 cu. in.	220	150		26
4	2.5 gal.	120-170 cu. in.	400	220	600	42
6	and		800	220	600	
7	Larger		1200	220	600	
9			2000	220	600	
12			3400			

For a given system pressure, flow rates for piston accumulators generally exceed those for bladder designs. Flow is limited by piston velocity, which should not exceed 10 ft/sec. to avoid piston seal damage. In high-speed applications, high seal contact temperatures and rapid decompression of nitrogen that has permeated the seal itself, can cause blisters, cracks and pits on the seal surface.

Contamination / Fluid type
Bladder/diaphragm accumulators are more resistant to damage caused by contamination of the hydraulic fluid than piston types. While some risk exists from contaminants trapped between the bladder and the shell, a higher risk of failure exists from the same contaminants acting on the piston seal.

Bladder accumulators are usually preferred to piston type accumulators for water service applications. Water systems tend to carry more solid contaminants and lubrication is poor. Both the piston and bladder type units require some type of preparation to resist corrosion on the wetted surfaces.

Piston accumulators are preferred for systems using exotic fluids or where extremes of temperature are experienced as compared to bladders. Piston seals are more easily molded in the required special compounds, and may be less expensive.

Response time
In theory, bladder/diaphragm accumulators should respond more quickly to system pressure variations than piston accumulator types, since there is no static friction to overcome with a piston seal, and there is no piston mass to be accelerated or decelerated. This is particularly true in small capacity, lower pressure applications. In practice, however, the difference in response is not great, and is probably insignificant in most applications.

This applies equally in servo applications, as only a small percentage of servos require response times of 25 ms or less. This is the point where the difference in response between piston and bladder accumulators becomes significant. Generally, a bladder accumulator should be used for applications requiring less than 25 ms response time, and either accumulator type for a response of 25 ms or greater.

Shock suppression
Shock control does not necessarily demand a bladder/diaphragm accumulator.

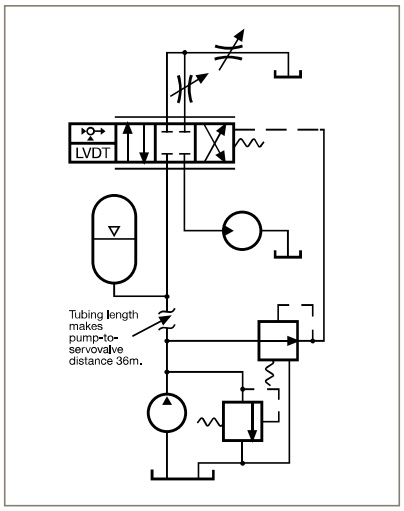

Fig. 3 Test circuit to generate and measure shock waves in a hydraulic system

Example 1
A test circuit **(Fig. 3)** includes a control valve situated 118 feet from a pump supplying fluid at 29.6 GPM. The circuit uses 1.25-inch tubing, and the relief valve is set to open at 2750 PSI. Shutting the control valve **(Fig. 4)** produces a pressure spike of 385 PSI over relief valve setting (blue trace).

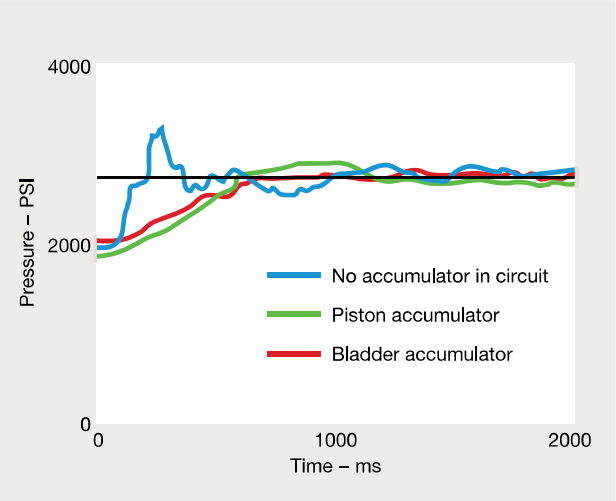

Fig. 4 Shock wave test results – Example 1

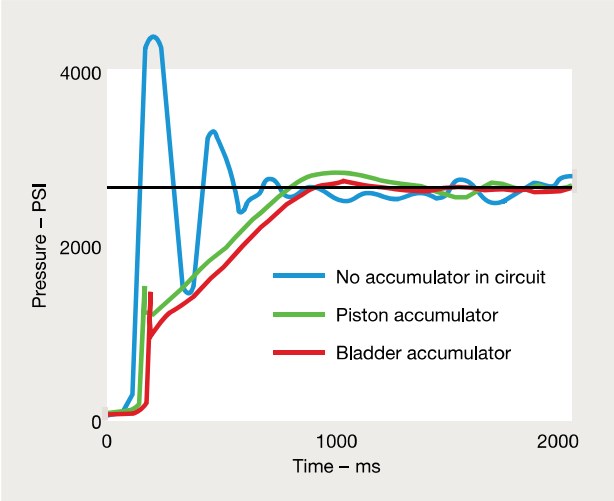

Fig. 5 Shock wave test results – Example 2

Installing a Parker one-gallon piston accumulator at the valve reduces the transient to 100 PSI over relief valve setting (green trace). Substituting a one-gallon bladder accumulator further reduces the transient to 80 PSI over relief valve setting (red trace), an improvement of only 20 PSI and of little practical significance.

Example 2
A second, similar test using 0.625-inch tubing and a relief valve setting of 2650 PSI **(Fig. 5)** results in a pressure spike of 2011 PSI over relief valve setting without an accumulator (blue trace). A Parker piston accumulator reduces the transient to 107 PSI over relief valve setting (green trace), while a bladder accumulator achieves a transient of 87 PSI over relief valve setting (red trace). The difference between accumulator types in shock suppression is again negligible.

High-frequency cycling
High-frequency system pressure cycling can cause a piston accumulator to 'dither', with the piston cycling rapidly back and forth in a distance less than its seal width. Over an extended period, this condition may cause heat buildup under the seal due to lack of lubrication, resulting in seal and bore wear. For high frequency dampening applications, therefore, a bladder/diaphragm accumulator was generally used. However, Parker has recently developed special piston seals that perform as effective as bladder/diaphragm accumulators.

Mounting position
The optimum mounting position for any accumulator is vertical, with the hydraulic port downwards. Piston accumulators can be mounted horizontally if the fluid is kept clean but, if solid contaminants are present or expected in significant amounts, horizontal mounting can result in uneven or accelerated seal wear. A bladder accumulator may also be mounted horizontally, but uneven wear on the side of the bladder as it rubs against the shell while floating on the fluid can reduce its service life and even cause permanent distortion. The extent of the damage will depend upon fluid cleanliness, cycle rate and compression ratio (i.e., maximum system pressure divided by minimum system pressure). In extreme cases, fluid can be trapped away from the hydraulic port **(Fig. 6)**, reducing output, as the bladder extends, forcing the poppet valve to close prematurely. Horizontal mount in high-flow applications is not recommended as the bladder can be pinched by the poppet.

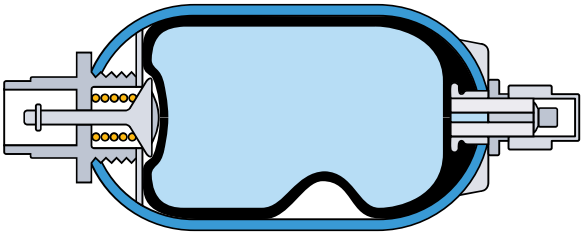

Fig. 6 A horizontally mounted bladder accumulator can trap fluid away from the hydraulic valve

External forces
Any application subjecting an accumulator to acceleration, deceleration or centrifugal force may have a detrimental effect on its operation, and could cause damage to a bladder accumulator. Forces along the axis of the tube or shell normally have little effect on a bladder accumulator but may cause a variation in gas pressure in a piston accumulator due to the mass of the piston.

Forces perpendicular to an accumulator's axis should not affect a piston accumulator, but fluid in a bladder accumulator may be thrown to one side of the shell **(Fig. 7)**, displacing the bladder and flattening and lengthening it. In this condition, fluid discharge could cause the poppet valve to pinch and cut the bladder. Higher precharge pressures increase the resistance of the bladder to the effects of perpendicular forces.

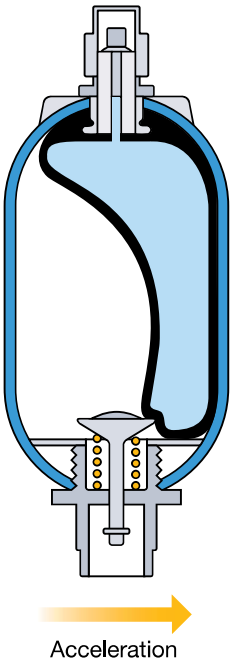

Fig. 7 Perpendicular force causes the mass of the fluid to displace the bladder

Sizing information
Accurate sizing of an accumulator is critical if it is to deliver a long and reliable service life. Information

and worked examples are shown in Parker's accumulator catalogues, or accumulator size can be calculated automatically by entering application details into Parker's accumulator inPHorm software selection program. Please contact your local Parker distributor for details, or contact us at www.parker.com/accumulator.

Safety
Hydro-pneumatic accumulators should always be used in conjunction with a safety block, to enable the accumulator to be isolated from the circuit in an emergency or for maintenance purposes.

The bladder/transfer barrier should never be filled more than 75% full

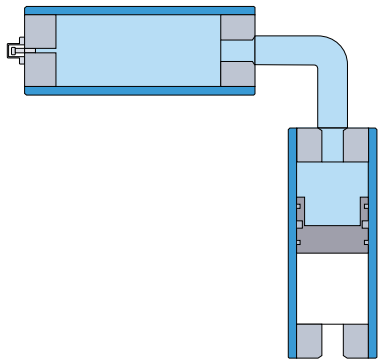

Fig. 8 An accumulator can be used with a remote gas bottle where space is critical

Gas Bottle Installations

Remote gas storage offers installation flexibility where the available space or position cannot accommodate an accumulator of the required size. A smaller accumulator may be used in conjunction with a Parker auxiliary gas bottle, which can be located elsewhere **(Fig. 8)**.

The gas bottle is sized by the formula:

For Piston:
gas bottle size = accumulator size - (required output from accumulator x 1.1)

For Bladder Type Accumulators:
gas bottle size = accumulator size - (required output from accumulator x 1.25)

For example, an application that calls for a 30-gallon accumulator may only actually require eight gallons of fluid output. This application could therefore be satisfied with a 10-gallon accumulator and a 20-gallon gas bottle.

Gas bottle installations may use either bladder or piston accumulators, subject to the following considerations:

- **Any accumulator used with remote gas storage should generally have the same size port at the gas end as at the hydraulic end, to allow an unimpeded flow of gas to and from the gas bottle. The gas bottle will have an equivalent port in one end and a gas charging valve at the other.**
- **A piston accumulator should be carefully sized to prevent the piston bottoming at the end of the cycle. Bladder accumulators should be sized to prevent filling to more than 75% full.**
- **Bladder accumulators require a special device called a transfer barrier tube at the gas end, to prevent extrusion of the bladder into the gas bottle piping. The flow rate between the bladder transfer barrier tube and its gas bottle will be restricted by the neck of the transfer barrier tube.**
- **Because of the above limitations, piston accumulators are generally preferred to bladder types for use in gas bottle installations.**
- **Diaphragm accumulators are normally not used in conjunction with gas bottles.**

Large/Multiple Accumulators

The requirement for an accumulator with an output of more than 50 gallons cannot usually be met by a single accumulator, because larger piston designs are relatively expensive, and bladder designs are not generally available in these sizes. The requirement, however, can be met using one of the multiple-component installations shown in **Figs. 9 and 10.**

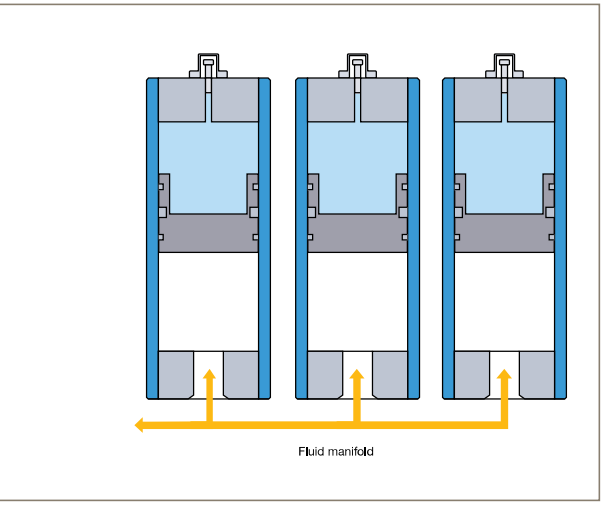

Fig. 9 Multiple accumulators manifolded together offer high system flow rates

The installation in **Fig. 10** consists of several gas bottles serving a single piston accumulator through a gas manifold. The accumulator portion may be sized outside of the limitations of the sizing formula on page 14, but should not allow the piston to strike the caps repeatedly while cycling. The larger gas volume available with this configuration allows a relatively greater piston movement – and hence fluid output – than with a conventionally sized single accumulator. A further advantage is that, because of the large precharge 'reservoir', gas pressure is relatively constant over the full discharge cycle of the accumulator. The major disadvantage of this arrangement is that a single seal failure could drain the whole gas system. Note: The addition of individual isolation valves on the gas bottles remedies this issue.

The installation in **Fig. 9** uses several accumulators, of piston or bladder design, mounted on a hydraulic manifold. Two advantages of multiple accumulators over multiple gas bottles are that higher unit fluid flow rates are permissible, and a single leak will not drain precharge pressure from the entire system.

A potential disadvantage is that, where piston accumulators are used, the piston with the least friction will move first and could occasionally bottom on the hydraulic end cap. However, in a slow or infrequently used system, this would be of little significance.

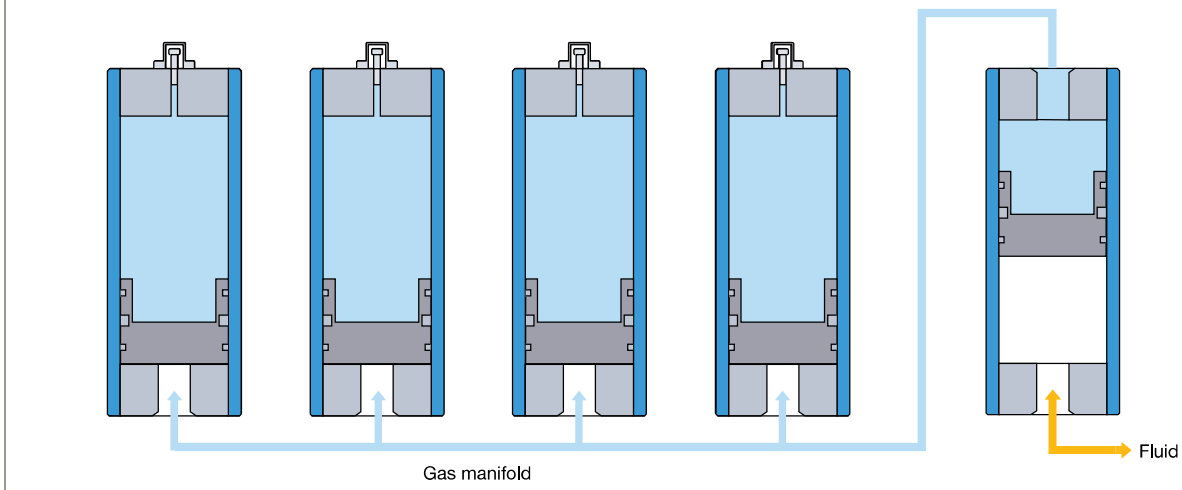

Fig. 10 Several gas bottles can supply precharge pressure to a single accumulator

Precharging

Precharging process
Correct precharging involves accurately filling the gas side of an accumulator with a high purity dry, inert gas, before admitting fluid to the hydraulic side.

It is important to precharge an accumulator to the correct specified pressure. Precharge pressure determines the volume of fluid retained in the accumulator at minimum system pressure. In an energy storage application, a bladder/diaphragm accumulator is typically precharged to 90% of minimum system pressure, and a piston accumulator to 95% of minimum system pressure at the system operating temperature.

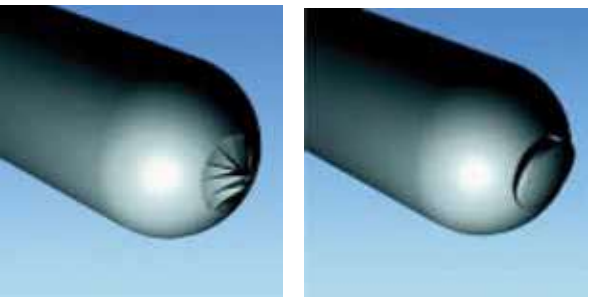

Fig. 11 (Left) Starburst rupture caused by loss of bladder elasticity

Fig. 12 (Right) C-shaped cut shows that bladder has been trapped under poppet

The ability to correctly carry out and maintain precharging is an important factor when choosing the type of accumulator for an application.

Bladder accumulators are far more susceptible to damage during precharging than piston types. Before precharging and entering in service, the inside of the shell should be thoroughly lubricated with system fluid.

This fluid acts as a cushion, and lubricates and protects the bladder as it expands. When precharging, the first 50 PSI of nitrogen should be introduced slowly. Failure to follow this precaution could result in immediate bladder failure: high-pressure nitrogen, expanding rapidly and thus cold, could form a channel in the folded bladder, concentrating at the bottom. Once the poppet valve has closed, the precharge can be increased to the desired pressure.

The chilled, brittle rubber, expanding rapidly would then inevitably rupture **(Fig. 11)**. The bladder could also be forced under the poppet, resulting in a cut **(Fig. 12)**.

Close attention should be paid to operating temperature during precharging, as a rise in temperature will cause a corresponding increase in pressure which could then exceed the precharge limit.

Little damage can occur when precharging or checking the precharge on a piston accumulator, but care should be taken to make sure the accumulator is void of all fluid to prevent getting an incorrect reading on the precharge. The protective cover on the hydraulic port must be removed prior to precharging. This will prevent the cover from flying off if the piston is not resting on the hydraulic cap.

Excessively high precharge
Excessive precharge pressure or a reduction in the minimum system pressure without a corresponding reduction in precharge pressure may cause operating problems or damage to accumulators.

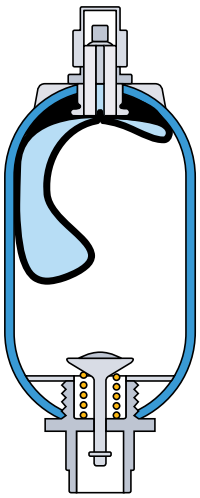

Fig. 13 Fluid entering an un-precharged bladder accumulator has forced the bladder into the gas stem

With excessive precharge pressure, a piston accumulator will cycle between stages (e) and (b) of **Fig. 2**, and the piston will travel too close to the hydraulic end cap. The piston could bottom at minimum system pressure, reducing output and eventually damaging the piston and piston seal. The piston can often be heard bottoming, warning of impending problems.

An excessive precharge in a bladder accumulator can drive the bladder into the poppet assembly when cycling between stages (e) and (b). This could cause fatigue failure of the poppet spring assembly, or even a pinched and cut bladder, should it become trapped beneath the poppet as it is forced closed **(Fig. 12)**. Excessive precharge pressure is the most common cause of bladder failure.

Excessively low precharge
Excessively low precharge pressure or an increase in system pressure without a corresponding increase in precharge pressure can also cause operating problems and subsequent

accumulator damage. With no precharge in a piston accumulator, the piston will be driven into the gas end cap and will often remain there. Usually, a single contact will not cause any damage, but repeated impacts will eventually damage the piston and seal.

Conversely, for a bladder accumulator, too low or no precharge can have rapid and severe consequences. The bladder will be crushed into the top of the shell and can extrude into the gas stem and be punctured **(Fig. 13)**. This condition is known as "pick out." One such cycle is sufficient to destroy a bladder. Overall, piston accumulators are generally more tolerant of careless precharging. Note: A pick out appears as a pin hole at the base of the bladder stem.

Monitoring piston accumulator precharge

Several methods can be used to monitor the precharge pressure of Parker's piston accumulators. Note that, in **Fig. 14b**, the flat piston must be used to enable the sensor to register its position.

- **With the hydraulic system shut down, cool and accumulator emptied of fluid: A pressure transducer or gauge located in the gas end cap (Fig. 14a) indicates the true precharge pressure.**

- **In applications where an accumulator is coupled to a gas bottle: A Hall Effect proximity sensor can be installed in the accumulator gas end cap (Fig. 14b) to detect when the piston comes within .050 inch of the cap. This system would provide a warning when precharge pressure has dropped and remedial action should be taken.**

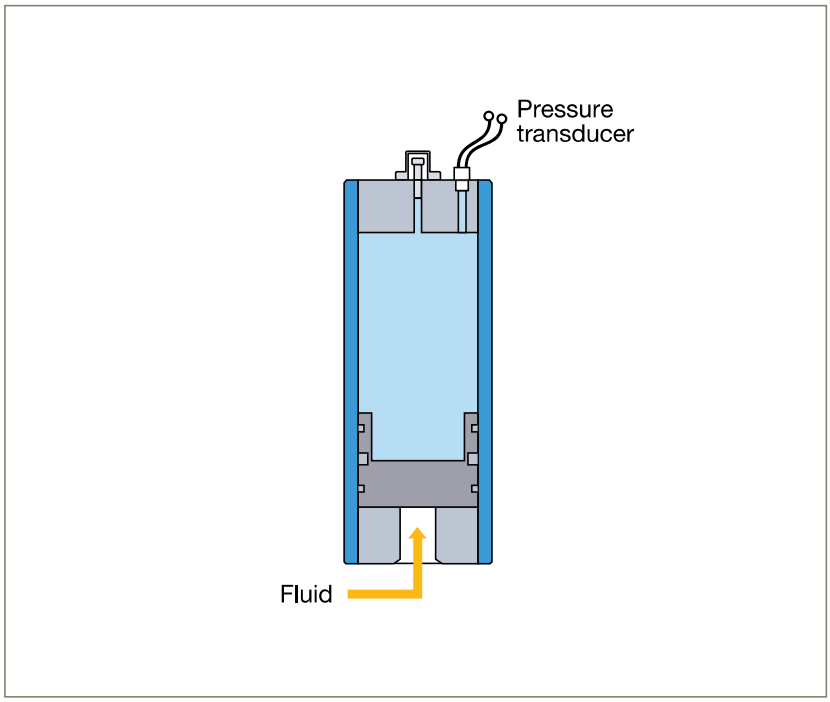

Fig. 14a Pressure transducer measures actual precharge pressure of shut down system

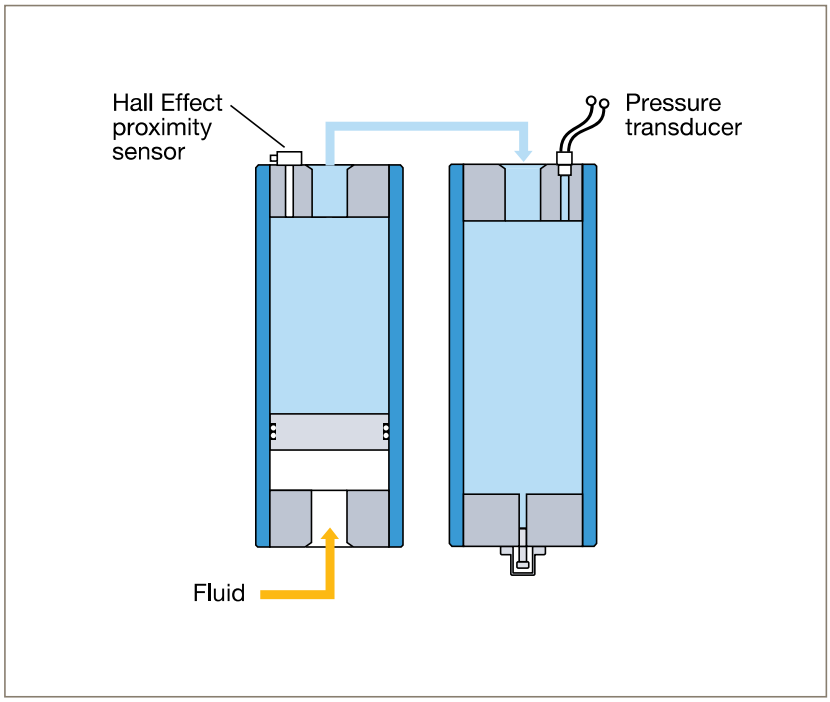

Fig. 14b Hall Effect sensor registers proximity of piston to end cap

- **In applications where it is desirable to know when the piston is approaching the gas cap of the accumulator or to detect a low precharge, as the rod is detected by the reed or proximity switch, the switch could be set up to send out a warning signal (Fig. 14c).**

  When used with a pressure switch, it could detect a low precharge.

  In some instances two reed or proximity switches could be installed on the housing. In such a case it may be required that the first switch is always made, assuring us that the precharge is not too high, if the second switch is made, it would report that the precharge is too low.

  The position of the piston can be detected by a fraction of an inch to several inches before it reaches the end cap.

- **When it is required to know the exact location of the piston inside the accumulator, use a linear displacement transducer (LDT) (Fig. 14d). Positions as well as velocity can be determined by the use of this unit. An LDT works by sending a signal down the probe. This signal is then reflected by a magnet attached to a rod and piston assembly. The LDT records the amount of time between sending and receiving the reflected signal and then calculates the position of the piston. Multiple signals will allow the unit to calculate velocity. Using this unit will allow the user to know the exact volume of fluid in the accumulator as well as the flow rate of the fluid.**

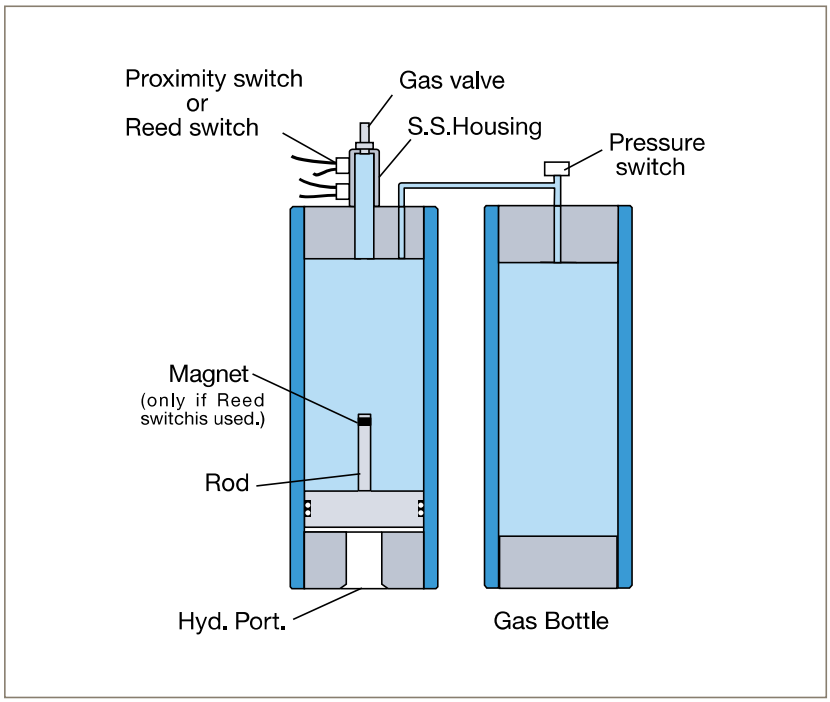

Fig. 14 c Proximity switches can sense the position of an approaching piston

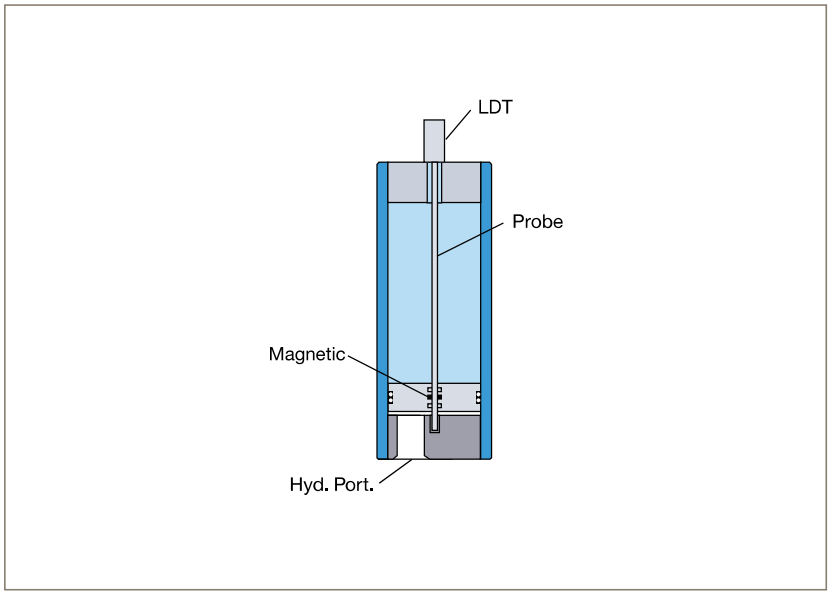

Fig. 14d Linear Displacement Transducers (LDT) can accurately detect both piston location and velocity

Failure Prevention

Accumulator failure is generally defined as inability to accept and exhaust a specified amount of fluid when operating over a specific system pressure range. Failure often results from an unwanted loss or gain of precharge pressure.

Correct precharge pressure is the most important factor in prolonging accumulator life. If maintenance of precharge pressure and relief valve settings is neglected, or if system pressures are adjusted without making corresponding adjustments to precharge pressures, shortened service life will result.

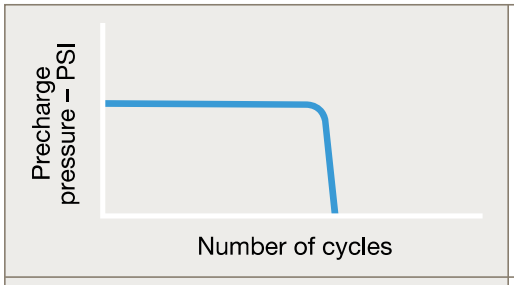

Fig. 15 When an accumulator bladder ruptures, precharge pressure immediately falls to zero

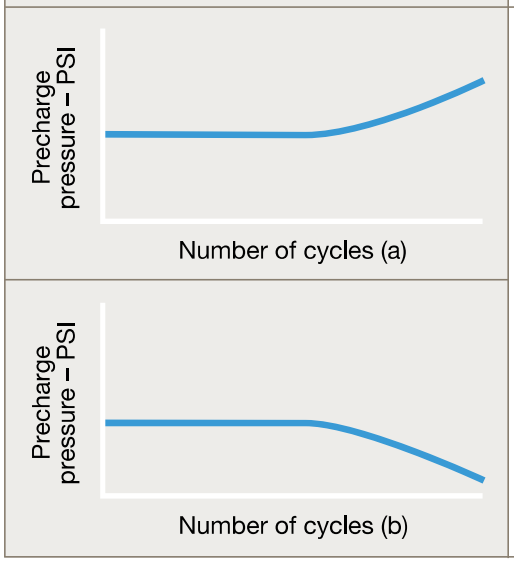

Fig. 16 As fluid leaks past an accumulator piston, precharge pressure rises (a) while gas leaking past the piston or valve causes precharge pressure to fall (b)

Bladder accumulators
Bladder/Diaphragm accumulator failure occurs instantaneously from bladder/diaphragm rupture **(Fig. 15)**. Rupture cannot be predicted because the intact bladder or diaphragm is essentially impervious to gas or fluid seepage; no measurable gas or fluid leakage through the bladder or diaphragm precedes failure.

Piston accumulators
Piston accumulator failure generally occurs in one of the following gradual modes.

Fluid leaks to the gas side
This failure, sometimes called dynamic transfer, normally takes place during rapid cycling operations after considerable time in service. The worn piston seal carries a small amount of fluid into the gas side with each stroke.

As the gas side slowly fills with fluid, precharge pressure rises and the accumulator stores and exhausts decreasing amounts of fluid. The accumulator will totally fail when precharge pressure equals maximum hydraulic system pressure. At that point, the accumulator will accept or deliver any fluid. Because the rise in precharge pressure can be measured **(Fig. 16a)**, failure can be predicted and repairs effected before total failure occurs.

Gas leakage
Precharge may be lost as gas slowly bypasses damaged piston seals. Seal deterioration occurs from excessively long service, from fluid contamination, or from a combination of the two. Gas can also vent directly through a defective gas core or end cap O-ring. The reducing precharge pressure then forces progressively less fluid into the system. Because this gradual decrease in precharge pressure can be measured **(Fig. 16b)**, repairs can again be effected before total failure occurs.

A correctly specified Parker accumulator, installed and maintained in accordance with the guidelines contained in this section, will give many years of trouble-free use. The combination of clean system fluid and accurate precharging will prevent most of the common fault conditions described here, and will contribute to the long life and high operating efficiency of the entire hydraulic system. It is recommended to use Parker filters to keep contaminants out of your system.

Solutions for Oil & Gas and Power Generation

For today's power generation accumulator needs in oil and gas production, wind power, wave power, nuclear, hydro-electric, turbine and valve actuator applications, Parker has the most complete selection of solutions.

In fact, our unrivaled strengths can significantly help improve your operations' efficiency, productivity, safety and profitability. With more than 50 years of experience, unsurpassed application and engineering expertise, industry-leading production capabilities and 24/7 global accessibility, Parker's Global Accumulator Division is your total advantage. See for yourself why we're the trusted supplier to a major share of today's worldwide market.

The vast product range you expect
At Parker, we engineer and manufacture a complete line of hydraulic accumulators and accessories. Our piston product line is the industry's largest. And the respected heritage of Greer is integrated in today's Parker bladder accumulator technology and capabilities. Combined, these strengths bring you one uniquely powerful advantage.

Parker custom-engineers up to 600-gallon capacity piston accumulators, including these 80-gallon special-grade stainless steel designs for 10,000 to 12,000-ft. subsea depths.

In addition, we are a leader in meeting special piston accumulator requirements, supplying bladder accumulators to the oil and gas industry, multiple certifications and meeting the dynamic requirements of global certifications.

Engineered custom-design solutions
When you need a custom accumulator solution, whether it's to solve a problem or optimize an opportunity, you need rapid-response expertise. Parker quickly sets your ideal solutions in motion with unmatched experience and capabilities.

Our custom advantages include:

- **modifying standard designs to your specifications**
- **bladder injection molding and rubber compound capabilities**
- **all grades of steel, stainless, exotics – plus new weight-saving composite designs**
- **sensors technology**
- **pulsation and shock dampening**

In addition, we possess leading expertise in special mounting, rack configurations and complete systems including manifolds and frames.

The world-class support you deserve when your operations go to emergency power, will the accumulators work the first time, every time? For the most critical scenario as well as utmost reliable day-to-day performance, every Parker accumulator that goes to work in a BOP control unit, tensioner system or compensator first meets or exceeds the highest standards in design and stringent testing.

Our quality system has been audited by such industry experts as ABS, DNV, ASME, PED, plus governmental and aerospace agencies. And as you'd expect, we are ISO 9001 certified.

Your bottom line also benefits from our lean processes and state-of-the-art systems that ensure the highest quality – with the industry's shortest lead times. And we deliver our product when you need it. Our proven delivery performance is rooted in tradition and team-driven each day at Parker.

We continually consider your big picture, as well. Beyond drilling and development, you can also turn to our broad accumulator expertise to pursue improvements in the facets of exploration, storage, transport and refining.

Global presence, immediate accessibility Above all, whenever and wherever in the world you need us, Parker is there with the assistance and information you need.

Parker accumulator customers have the leading advantage of our:

- **sales and service offices located globally**
- **worldwide distribution network**

For custom-design initiatives and solutions, customers world-wide look to Parker's superior engineering capabilities and technology first.

- **manufacturing facilities on five continents**
- **emergency delivery with a toll-free call**
- **inPHorm™ sizing and selection software**
- **instant information at www.parker.com/accumulator**
- **the industry's most complete print materials**

By far, your greatest value-added advantage in accumulators is Parker's Global Accumulator Division. For the details and assistance you need to put our strengths to work for your operations, contact us.

Solutions for Mobile Applications

From construction sites to farmlands, forests and more, the challenges for mobile hydraulics are wide-ranging and varied. Yet the foremost demands are the same: Total reliability whatever the conditions and optimum performance from start up to shut down.

For peak performance and efficiency in mobile equipment, Parker's Global Accumulator Division has the most complete selection of solutions. We bring you the most experience in the industry, unsurpassed application and engineering expertise, industry-leading production capabilities and 24/7 global accessibility.

Accumulator advantages
Reduced shock loads, lower noise levels and reduced energy consumption are among the primary benefits of specifying an accumulator in a hydraulic system. Smaller pumps, motors and reservoirs save installation space and cost, while the inherent fail-safe performance of a piston accumulator provides safe operating margins for braking and steering systems.

Accumulators also can benefit hydraulic systems by providing:

- **an auxiliary power source for use during peak periods**
- **protection from damage due to thermal expansion and contraction in a closed system**
- **compensation for changes in fluid value to assure a positive pressure**
- **emergency fail-safe power**
- **maintained necessary pressure for long periods of time**
- **fluid dispensing at a slow, constant rate to critical equipment wear areas**

In the longer term, reduced operator fatigue and extended maintenance intervals also help to reduce ownership costs and boost operational productivity.

Look to the global leader
Parker supplies the industry's broadest hydro-pneumatic accumulator product line, including pistons, bladders and diaphragms. In fact, the well-known Greer bladder accumulator line is part of today's Parker advantage. As a result, without limitations or bias, we recommend and supply the best-engineered solution based on your application.

You can depend on Parker's unmatched strengths in:

- **state-of-the-art technology**
- **lean processes resulting in the industry's shortest lead times**
- **the industry's top technicians and professionals**
- **leadership in engineered custom-design work**
- **certification capabilities for today's global demands**

Parker technology and lean manufacturing
Years of lean manufacturing principles allow us to turn your order around quickly and efficiently. We use highly flexible automation, high-precision injection molding machines and robotic machining cells to produce the highest-quality bladder and piston accumulators. Every accumulator is pressure tested to excellent quality standards before it ships to the customer. And as you'd expect, we are ISO 9001 certified.

The right solution for your application
As a major industry supplier of all three types of accumulators, we first evaluate your needs and opportunities to increase the performance, efficiency and value of your product. We recommend the ideal solution based on your specific situation and criteria. We then ensure that your accumulators are manufactured with the best-grade materials to the highest industry standards. And we provide the required labeling, specially designed packaging and shipping containers to meet today's critical safety and environmental regulations.

Every accumulator is pressure tested before it ships to the customer.

Leading engineered custom design
Due to our strong engineering capabilities, you can also look to Parker first for custom-design initiatives and solutions, including:

- **efficient modification of standard designs to your specifications**
- **custom rubber compression molding capabilities**
- **all grades of steel, stainless and exotics, as well as advanced performance materials**
- **temperature pressure and positioning sensors technology**
- **special mounting, including bank (rack) configurations of multiple accumulators**

Unsurpassed reliability and responsiveness
Parker accumulators are at work in mobile and industrial equipment worldwide – including some of the harshest environments on earth. For our superior capabilities, experience and service, major OEMs have made us their supplier of choice. In fact, we are the trusted supplier to a major share of today's accumulator market.

Equally important, our worldwide service, distribution and sales network keeps us responsive and accessible to you anywhere, anytime.

Parker accumulator customers have the advantages of our:

- **sales and service offices located globally**
- **worldwide distribution network**
- **manufacturing facilities on five continents**
- **emergency delivery with a toll-free call**
- **inPHorm™ sizing and selection software**
- **instant information at www.parker.com/accumulator**
- **the industry's most complete print materials**

For the details and assistance you need to put our strengths to work in your mobile applications, contact Parker's Global Accumulator Division.

Typical Mobile/Industrial Applications and Advantages Include:

- **emergency backup for steering, brake and pilot circuits**
- **shock absorption in hydrostatic drives**
- **pressure spike dampening in fork lifts/cherry pickers**
- **optimized suspension and braking systems performance**
- **reduced pulsations in plunger and diaphragm pumps**
- **injection molding and die cast equipment (high pressure and flows in short time period)**
- **maintained pressure and reduced pump size in machine tools**
- **oil supply for turbine engine lubrication**
- **winches (maintaining line tension)**
- **auxiliary/emergency power**

Parker (inPHorm™) On Line

System Highlights
- **accumulator sizing and selection**
- **Input formats:**
  - **rapid selection**
  - **systematic design**
- **available information outputs**
  - **HPGL CAD drawing**
  - **CAD file (*.dxf)**
  - **selection summary printout**
  - **RFQ/order sheet printout**

Version 3.7 makes accumulator product sizing and selection easy
Parker offers leading-edge application assistance with **inPHorm™ for Accumulators.** This program walks you through sizing the proper Parker accumulator product for your application. Using **inPHorm** will increase your efficiency and minimize the engineering time required to design in accumulators.

The program:

- **guides you through the selection process**
- **performs calculations**

"Advisor" options within the program offer additional assistance with special modifications and design considerations. During any portion of the program, reference materials can be accessed or printed for future use.

inPHorm™ for Accumulators is available for use online at **www.parker.com.** Look under Quick Links for Product Selection Tools. For further information call Parker Hannifin Global Accumulator Division at **(815) 636-4100**.

Piston Accumulators

Threaded Piston Accumulators ■ ACP Crimped Piston ■ Gas Bottles ■ Metric Accumulators & Bottles

IN THIS SECTION

Series 2000 & 3000	28
ACP Piston Accumulators	37
Series 4000 & 5000	43

Features:

- Heavy Duty Service with Operating Pressures to 5000 PSI
- 1.5" thru 12" Bores with Over Fifty Standard Capacities
- "Fatigue Tested" Designs, 2" thru 7" Bores
- V-O-ring Piston Seals Std
- Serviceable Threaded End Construction
- Certifications Available: ASME, DNV, ABS, AS1210, SELO, CRN, GOST, CE
- Five Standard Seal Options to Handle a Variety of Fluids and Temperatures
- Temperature Ranges -45° to 320°F

Piston accumulators provide a means of regulating the performance of a hydraulic system. They are suitable for storing energy under pressure, absorbing hydraulic shocks, and dampening pump pulsation and flow fluctuations. The simple, compact, cylindrical design of piston accumulators ensures dependable performance, maximum efficiency, and long service life.

Why Use Piston Accumulators?

- Improves System Efficiency
- Supplements Pump Flow
- Supplies Power in Emergency
- Compensates for Leakage
- Absorbs Hydraulic Shocks
- Wide Range of Sizes
- Lower Gas Permeation Rate
- Extremely High-flow Rates
- High/Low Temperature Tolerance
- High Compression Ratios
- Can Be Used With Remote Gas Bottles
- Can Be Mounted in Any Position
- Failure Mode Is Gradual, Predictable
- Sensors Can Be Fitted for Performance Monitoring
- Less Maintenance

Parker Piston Accumulators… Your #1 Choice!

Parker is the leading manufacturer of piston accumulators in North America. Parker's broad offering includes:

- Piston Accumulators for 2000, 3000, 4000 & 5000 PSI
- Gas Bottles for 3000, 4000 & 5000 PSI
- Metric Piston Accumulators for 207, 276 and 345 Bar
- Metric Gas Bottles for 207, 276 and 345 Bar
- A Wide Array of Options and Accessories

Best in Class Capabilities

- Accumulators up to 25" ID and 250 gallons and larger
- Pressure ratings in excess of 20,000 PSI
- Over 40 types of seal options provide compatibility with any fluid and application
- Wide variety of stainless steel and alternative material options
- Extreme temperatures, certified product to -50°F
- Integrated solutions including imbedded valving and controls in accumulator
- Struts and suspension products designed for rugged mobile applications
- Many surface coatings, including epoxies, CARC paints, electroless nickel plating
- Accumulators custom designed for the most demanding markets and global locations
- Unique lockout and tag-out integrated functions
- DOT shipping exemptions for pre-charged vessels

Our Wide Range of Piston Accumulators . . .

Our Piston Accumulator Series

Parker offers standard piston accumulators rated for 2000, 3000, 4000 and 5000 PSI. To make it easier for you to order, we have divided the piston accumulator section into Series 2000 & 3000, ACP Accumulators and Series 4000 & 5000 with separate technical and ordering information. Please consult the factory for a wide variety of accumulators with pressure ratings exceeding 5000 PSI.

Series 3000 *7" Bore Now Available in Non-ASME*

ASME certification is a requirement of strength and material traceability (see page 6). Many markets require ASME certification, but not all. It is the function of the system designer to specify whether ASME is or is not required.

We now offer a 7" bore true non-ASME accumulator which meets ASME Section VIII, Division I design requirements while utilizing industry standard materials. When ASME certification is not required, specifying these accumulators can result in moderate savings.

Series 2000 *12" Bore*

Parker offers piston accumulators rated for 2000 PSI. When a 12" bore is required with a minimum operating pressure of 2,000 PSI or less, specifying these accumulators can result in moderate savings.

① Piston type accumulators are designed with compact, rugged **steel shell and caps.** The steel shell allows heat to dissipate effectively. The bore is micro-finished for extended seal life. The threaded caps allow for easy repair and seal replacement.

② The **piston seal** consists of a unique, five-bladed V-O-ring with back-up washers. This design eliminates seal roll-over and ensures total separation of fluid and gas under the most severe operating conditions.

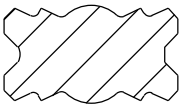

The V-O-ring also holds full pressure throughout long idle periods between cycles, providing dependable, full pressure storage of hydraulic energy. It ensures safe, reliable absorption of pressure peaks. The piston seal design helps to prevent sudden failure of the accumulator.

The V-O-ring seals are available in a wide variety of compounds to cover a broad range of fluids and operating temperature ranges (see Options).

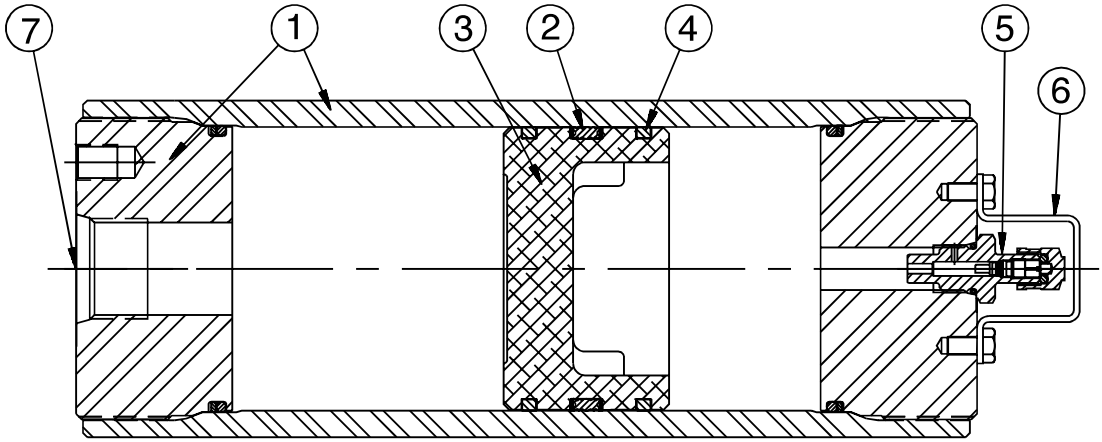

③ The **lightweight piston** design allows fast response to reduce shock in rapid cycling applications. The dished profile of the piston provides extra gas capacity and greater useable volume of fluid.

④ **PTFE glide rings** eliminate metal-to-metal contact between the tube and piston, reducing wear and extending service life.

⑤ All piston accumulators are fitted with a standard designed **gas valve** for ease of gas precharging. Series 3000, 3" thru 6" bores, are fitted with standard cored gas valve cartridges (ISO-4570-8V1). The Series 4000 and Series 5000, 3" thru 6" bores, have as standard a gas valve with a 5000 PSI high-pressure valve cartridge. Offered as an option is a high flow gas valve (L07689000K). For 7" thru 12" bore sizes, the high flow gas valve is standard. The high-flow gas valve is available by special request – please consult factory.

⑥ The steel **gas valve protector** reduces the risk of damage to the gas valve from external impact.

⑦ A **wide range of port types and sizes** are available. SAE straight thread and SAE flange ports are fitted as standard. NPTF, SAE 4-bolt & special flanges, BSPP, Metric, and ISO 6149-1 ports are available options.

Series 3000 Piston Accumulators

(and 12" units at 2,000 PSI)

IN THIS SECTION

Overview 28
Specifications & Options 29

Models, Capacities & Dimensions

Series 3000 31
Series 2000 (12" bore only) 32
Port Options 33
Parts & Accessories 34
Ordering Information 35

Features

- Heavy Duty Service with 3000 PSI Operating Pressure
- 3" thru 12" Bores with More Than 50 Standard Capacities
- V-O-ring Piston Seals
- Serviceable Threaded End Construction
- Five Standard Seal Options to Handle a Variety of Fluids and Temperatures
- ASME/DNV/ABS/AS1210/ SELO/CRN/GOST/CE Certifications Available
- Temperature Ranges -45° to 320°F

Materials

- Shell – high strength alloy steel
- Caps – steel
- Pistons – aluminum (3" thru 7"), ductile iron (9" & 12")
- Gas Valve Cartridge – steel
- Gas Valve Protector – steel
- Piston Glide Rings – PTFE
- Piston & End Seals – various polymers
- Piston Seal Backups – PTFE

Actual Bore Sizes & Maximum Flow Rates

Nominal Bore Size (in)	Actual Bore Size		Max. Recommended Flow*	
	(in)	(mm)	GPM	LPM
3	3.00	76.20	220	834
4	4.03	102.4	397	1504
6	5.78	146.9	818	3096
7	7.00	177.8	1199	4538
9	9.00	228.6	1982	7502
12	11.88	301.6	3450	13061

***Note:** Based on 120 in/sec maximum piston speed, port & fitting size will become limiting factors for most applications.*

Standard Ports

The following ports are supplied as standard on all fluid ends and on the gas end of accumulators ordered for use with gas bottles:

Notes:

1) For flange dimensions, see tables below.

2) On standard 7" & 9" bore accumulators, both SAE Straight Thread and Flange ports are available as standard. Omit port code for SAE #32 Straight Thread, specify "PL" port code for 2" Code 61 Flange when ordering. Flange ports are recommended at operating pressures above 2000 PSI due to pressure limitations of most #32 SAE Straight Thread fittings.

Bore Size	Standard Ports			
	Standard Models		Metric Models	
	SAE Port	SAE Flange[1]	BSPP Port (in)	Metric SAE Flange[1]
3	#12	–	1	–
4	#20	–	1	–
6	#24	–	1-1/2	–
7	#32	2" Code 61	–	2" Code 61
9	#32	2" Code 61	–	2" Code 61
12	–	3" Code 61	–	3" Code 61

[1] See flange dimensions in Port Options.

Pressure Ratings

Parker Series 3000 piston accumulators are rated at 3000 PSI and a minimum 4 to 1 design factor. Pressures over 3000 PSI, see Series 4000 and Series 5000 accumulators. For pressures over 5000 PSI consult factory.

Fluids

Parker's piston accumulators are compatible with a wide variety of fluids. Standard accumulators (with nitrile seals) may be used with petroleum-based industrial oils or water-based flame resistant fluids. Optional seals compatible with most industrial fluids are available with temperature ranges from -45°F to 320°F (-43°C to 160°C).

Precharge

Units are shipped with a nominal nitrogen precharge as standard. For specific precharge pressures, specify at the time of order.

Auxiliary Gas Bottles

When space does not permit the installation of the required piston accumulator, a smaller accumulator may be used by connecting it to an auxiliary gas bottle(s) that can be located in a nearby spot where space is available. In some cases, a piston accumulator and gas bottle combination may be more economical, especially large capacity sizes. Piston travel, confined to the accumulator, must be calculated with ample margins to store the required fluid.

Gas Valves

Two types of gas valves are available on Series 3000 piston accumulators and gas bottles. Units with 3" thru 6" bores, are offered with a cored gas valve cartridge (ISO-4570-8V1) as standard. All 7" thru 12" bore units are supplied with a heavy-duty, high-pressure, poppet-type gas valve cartridge (L07689000K) as standard.

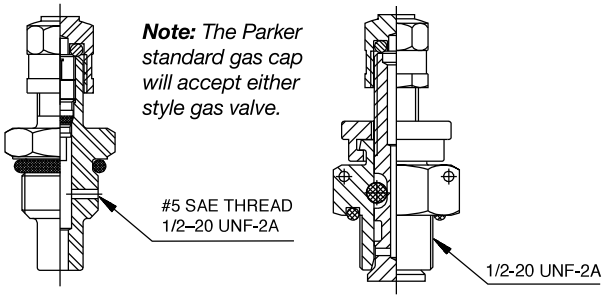

L07688000* L07689000*

Available Options

If your application requires a piston accumulator, gas bottle, or special option that falls outside of Parker's broad offering, consult your local distributor, Parker representative, or the factory with your specific requirements. Parker has the manufacturing and engineering expertise to design and build piston accumulators to your exacting requirements, from simple modifications of standard units to complete designs. Some example of Parker's past special designs include:

- High Pressures
- Special and Stainless Steel Materials
- Piston Position and Velocity Sensors and Switches
- Water Service
- Non-Standard Capacities
- Extreme Temperatures

Water Service Option (W)

Piston accumulators are available for use with water as the fluid media. Modifications include electroless nickel plating all surfaces and metal parts. Consult factory for details.

Seal Material Options

Seal Code	Polymer	**Recommended Operating Temperature Range	Maximum Temperature with Reduced Life	General Application and Compatibility*
K	Buna-Nitrile	-20°F to 165°F -29°C to 74°C	200°F 93°C	Parker's Standard Compound – Compatible with most mineral oil-based fluids
E	Fluorocarbon Elastomer	-10°F to 250°F -23°C to 121°C	400°F 204°C	Compatible with most mineral oil-based fluids at higher temperatures and some exotic fluids
D	Ethylene Propylene	-40°F to 250°F -40°C to 121°C	300°F 149°C	Compatible with most phosphate ester fluids and some synthetic fluids
H	Hydrogenated Nitrile	-25°F to 320°F -32°C to 160°C	350°F 177°C	Compatible with most oil-based and biodegradable fluids, maintains sealing effectiveness at a wide range of temperatures
Q	Low Temp. Nitrile	-45°F to 160°F -43°C to 71°C	200°F 93°C	Compatible with most mineral oil-based fluids and maintains sealing effectiveness at low temperatures

**Consult local distributor or factory for fluid compatibility information.*

***The temperatures listed indicate the operating temperature range of the seals, not the accumulator. For the Minimum Design Metal Temperature (MDMT) of ASME certified accumulators, refer to page 31.*

Gas Valve Option (M)

A heavy-duty, high-pressure, poppet-type gas valve is available on 3" through 6" bores as an option (M). Specify when ordering.

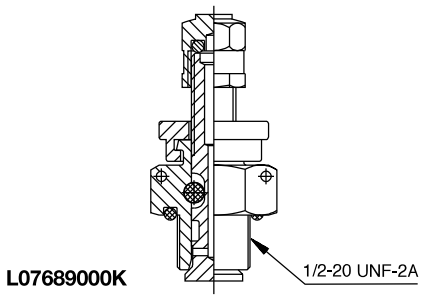

Safety Fuse Options (F)

Safety Fuses are used as a safety device on accumulators and gas bottles to prevent over-pressurization of gas due to external heat or hydraulic pressure (set at 140% of maximum system pressure to avoid rupture disk fatigue and premature failure). The rupture disks are calibrated to rupture at a predetermined pressure. Safety fuses are available on most sizes of piston and bladder accumulators and gas bottles. Safety fuses can be installed on all piston accumulators by using the "Fuse Adapter" as shown to the right. 4" bore units and above can be equipped with a fuse port machined in the gas cap by specifying the "Safety Fuse Option" (F) at the time of order in the model code, see "How to Order." The safety fuse assembly and/or fuse adapter must be ordered separately.

Description	Part Number
Safety Fuse Assembly[1]	086471xxxx
Replacement Rupture Disks	756003xxxx
Fuse Adapter	1468970002

[1] Assembly includes housing and rupture disk, xxxx = pressure setting in 100 PSI increments, i.e., for an assembly with a 2000 PSI setting, order P/N 0864712000.

***Note:** ASME and CRN units available upon request.*

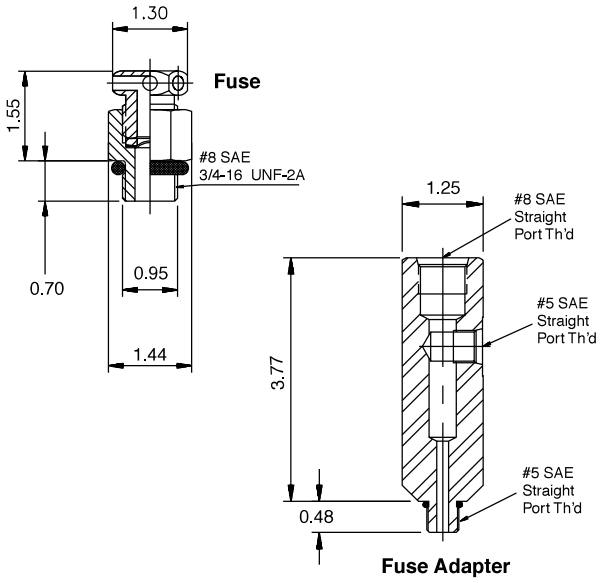

3000 PSI (207 Bar Metric) Piston Accumulators for Oil and Water Service

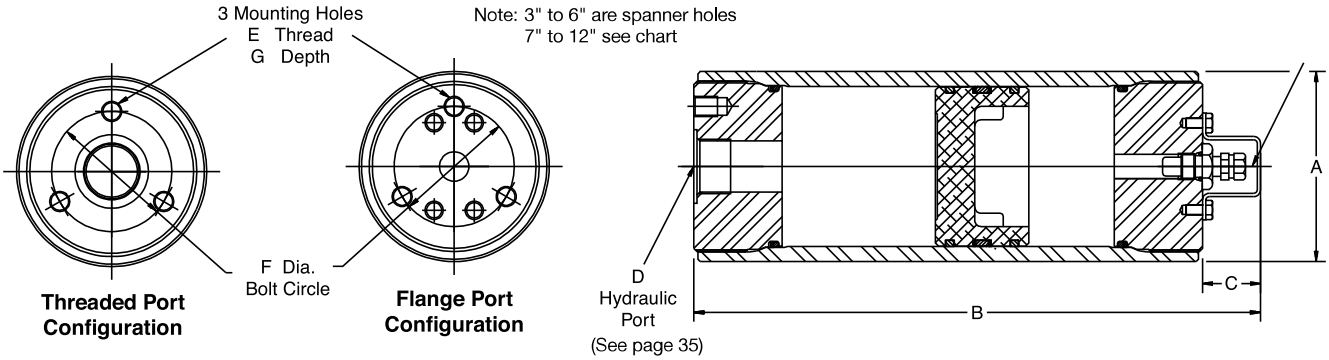

Model No.	Fluid Volume		Gas Volume		A in (mm)	B in (mm)	C in (mm)	E in (mm)	F in (mm)	G in (mm)	Weight lbs (Kg.)
Oil Service	gal (Liters)	(cu in)	cu in	Liters							
A2N0005D1K (D2K)	– (0.08)	5	6	(0.11)	2.38 (60)	6.76 (172)	1.06 (27)	–	–	–	5 (2.1)
A2N0010D1K (D2K)	– (0.16)	10	11	(0.19)		8.31 (211)					5 (2.3)
A2N0015D1K (D2K)	– (0.25)	15	16	(0.24)		9.78 (250)					6 (3.3)
A2N0029D1K (D2K)	1 Pint (0.48)	29	30	(0.50)		14.19 (360)					7 (2.6)
A2N0058D1K (D2K)	1 Quart (0.95)	58	59	(0.98)		23.19 (589)					10 (4.7)
A3N0029D1K (D2K)	1 Pint (0.48)	29	34	(0.56)	3.56 (90)	10.25 (260)	1.13 (29)	.39 (9.9)	2.25 (60)	0.59 (15)	14 (6.5)
A3N0058D1K (D2K)	1 Quart (0.95)	58	63	(1.03)		14.34 (364)					18 (8.1)
A3N0090D1K (D2K)	1.5 Quart (1.42)	90	95	(1.56)		18.94 (481)					22 (9.8)
A3N0116D1K (D2K)	1/2 Gal. (1.90)	116	121	(1.98)		22.56 (573)					25 (11.1)
A3N0183D1K (D2K)	3 Quart (2.84)	183	188	(3.08)		32.06 (814)					32 (14.6)
A4N0058D1K (D2K)	1 Quart (0.95)	58	68	(1.11)	4.75 (121)	11.63 (295)	1.13 (29)	.45 (11.4)	3.25 (82)	0.68 (18)	29 (13.0)
A4N0116D1K (D2K)	1/2 Gal. (1.90)	116	126	(2.06)		16.19 (411)					35 (15.9)
A4N0231D1K (D2K)	1 Gal. (3.79)	231	241	(3.95)		25.19 (640)					48 (21.8)
A4N0347D1K (D2K)	1-1/2 Gal. (5.69)	347	357	(5.85)		34.31 (871)					61 (27.6)
A4N0578D1K (D2K)	2-1/2 Gal. (9.47)	578	588	(9.64)		52.38 (1330)					87 (39.3)
A6N0231D1K (D2K)	1 Gal. (3.79)	231	266	(4.36)	6.88 (175)	17.38 (441)	1.13 (29)	.45 (11.4)	4.38 (110)	0.84 (22)	83 (37.8)
A6N0578D1K (D2K)	2-1/2 Gal. (9.47)	578	613	(10.0)		30.63 (778)					124 (56.3)
A6N0924D1K (D2K)	4 Gal. (15.1)	924	959	(15.7)		43.81 (1113)					165 (74.7)
A6N1155D1K (D2K)	5 Gal. (18.9)	1155	1190	(19.5)		52.63 (1337)					192 (87.0)
A6N1733D1K (D2K)	7-1/2 Gal. (28.4)	1733	1768	(29.0)		74.63 (1896)					260 (117.8)
A6N2310D1K (D2K)	10 Gal. (37.9)	2310	2345	(38.4)		96.63 (2454)					327 (148.5)
A7N0578D3KPL (D2K)	2-1/2 Gal (9.47)	578	633	(10.4)	8.13 (206.5) ±0.06 (±1.52)	27.25 (692)	1.63 (41)	.625-18 (M16)	5.75 (150)	0.94 (24)	170 (76.9)
A7N1155D3KPL (D2K)	5 Gal. (18.9)	1155	1210	(19.8)		42.25 (1073)					226 (103)
A7N1733D3KPL (D2K)	7-1/2 Gal. (28.4)	1733	1788	(29.3)		57.25 (1454)					283 (129)
A7N2310D3KPL (D2K)	10 Gal. (37.9)	2310	2365	(38.8)		72.25 (1835)					340 (154)
A7N3465D3KPL (D2K)	15 Gal. (56.8)	3465	3520	(57.7)		102.25 (2597)					454 (206)
A7N5775D3KPL (D2K)	25 Gal. (94.6)	5775	5830	(95.5)		162.25 (4121)					682 (309)
A9K2310D3KPL (D2K)	10 Gal. (37.9)	2310	2400	(39.3)	11.02 (279.9) ±0.09 (±2.29)	48.75 (1238)	1.63 (41)	.75-16 (M20)	7.00 (182)	1.13 (29)	595 (270)
A9K3465D3KPL (D2K)	15 Gal. (56.8)	3465	3555	(58.3)		66.94 (1700)					758 (344)
A9K4620D3KPL (D2K)	20 Gal. (75.7)	4620	4710	(77.2)		85.06 (2161)					920 (417)
A9K5775D3KPL (D2K)	25 Gal. (94.6)	5775	5865	(96.2)		103.18 (2622)					1083 (491)
A9K6930D3KPL (D2K)	30 Gal. (114)	6930	7020	(115.1)		121.37 (3083)					1246 (565)
A12K5775D1K (D2K)	25 Gal. (94.6)	5775	5975	(97.9)	14.41 (365.9) ±0.09 (±2.29)	67.50 (1715)	1.63 (41)	.875-9 (M20) (6X)	9.00 (230)	1.50 (38)	1336 (606)
A12K6930D1K (D2K)	30 Gal. (114)	6930	7130	(117)		76.31 (1938)					1490 (676)
A12K9240D1K (D2K)	40 Gal. (151)	9240	9440	(155)		98.88 (2512)					1799 (816)
A12K11550D1K (D2K)	50 Gal. (189)	11550	1175	(193)		119.62 (3038)					2108 (956)

PHASED OUT

The Minimum Design Metal Temperature (MDMT) for ASME certified 7" and 9" piston accumulators presented in this section is 20°F (-7°C).
The Minimum Design Metal Temperature (MDMT) for ASME certified 12" piston accumulators presented in this section is 32°F (0°C).
Piston accumulators are available with MDMT below -40°F (-40°C). Consult factory for options.

Notes:

- *For Water Service add "W" after construction code, see "How to Order" information.*
- *Standard accumulators are designated D1K in model number, metric are D2K.*
- *See "Port Options" for complete listing of standard and optional ports.*
- *ASME/DNV/ABS/AS1210/SELO/CRN/GOST/CE certified accumulators and gas bottles are available.*
- *When accumulators are to be used with gas bottles, order "Accumulators for Use with Gas Bottles."*
- *3", 4" & 6" bores standard with cored gas valves. Poppet type (L07689000K) gas valve available as an option.*

2000 PSI (139 Bar Metric) Piston Accumulators for Oil and Water Service

We offer a 2000 PSI accumulator in 12" bore size and a variety of capacities for industries where lower pressure ratings can be used.

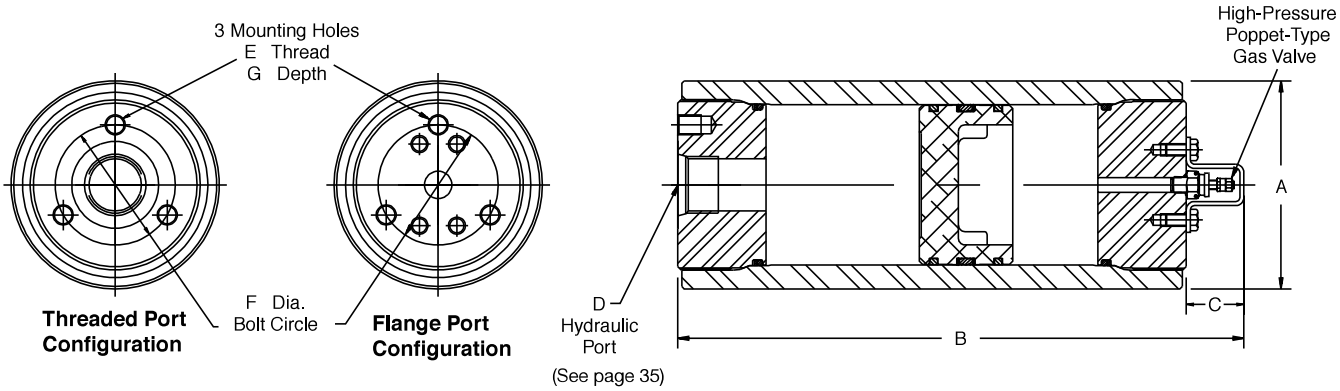

Model No.	Fluid Volume		Gas Volume		A in (mm)	B in (mm)	C in (mm)	E in (mm)	F in (mm)	G in (mm)	Weight lbs (Kg)
Oil Service	gal (Liters)	cu in	cu in (Liters)								
A12K4620K1K (K2K)	20 (75.71)	4620	4820	(75.71)	14.02 ±0.09 (102.11 ±2.29)	55.75 (1416)	1.62 (41)	7/8-9 (M20) (6X)	9.00 (229)	1.50 (38)	1048 (475)
A12K5775K1K (K2K)	25 (94.64)	5775	5975	(97.91)		66.19 (1681)					1193 (541)
A12K6930K1K (K2K)	30 (113.56)	6930	7130	(116.84)		76.62 (1946)					1338 (607)
A12K9240K1K (K2K)	40 (151.42)	9240	9440	(154.69)		97.50 (2477)					1628 (738)
A12K11550K1K (K2K)	50 (189.27)	11550	11750	(192.55)		118.37 (3007)					1918 (870)

Notes:

- *For Water Service add "W" after construction code, see "How to Order" information.*
- *Most SAE #32 fittings are rated for 2000 PSI. If 2000 to 3000 PSI service is required, two options are available; order accumulator with optional standard 2" SAE Code 61 4-bolt flange port by specifying "PL" code when ordering or order the accumulator with a SAE #24 port or smaller. See "Port Options" for dimensions and "How to Order".*
- *See "Port Options" for complete listing of standard and optional ports.*
- *ASME/DNV/ABS/AS1210/SELO/CRN/GOST/CE certified accumulators and gas bottles are available.*
- *When accumulators are to be used with gas bottles, order "Accumulators for Use with Gas Bottles."*
- *Poppet type (L07689000K) gas valve standard.*

Optional Ports

The following ports are available as options on all Series 3000 piston accumulators

SAE Straight Thd.			Code 61 Flange				NPT			BSPP			ISO 6149-1		
Port Size	Port Code	Min. Bore	Port Size	Port Code Inch	Port Code Metric	Min. Bore	Port Size	Port Code	Min. Bore	Port Size	Port Code	Min. Bore	Port Size	Port Code	Min. Bore
#5	TA	3"	1/2"	PT	MT	3"	3/8"	UT	3"	3/8"	RA	3"	M14	YA	3"
#6	TB	3"	3/4"	PU	MU	3"	1/2"	UU	3"	1/2"	RB	3"	M18	YB	3"
#8	TC	3"	1"	PV	MV	3"	3/4"	UV	3"	3/4"	RC	3"	M22	YC	3"
#10	TI	3"	11/4"	PW	MW	3"	1"	UW	3"	1"	RD	3"	M27	YD	3"
#12	TD	3"	11/2"	PJ	MJ	4"	11/4"	UX	3"	11/4"	RE	3"	M33	YE	3"
#16	TE	3"	2"	PL	ML	6"	11/2"	UY	4"	11/2"	RF	4"	M42	YF	3"
#20	TF	3"	21/2"	PM	MM	6"	2"	UZ	4"	2"	RG	4"	-	-	-
#24	TG	4"	3"	PN	MN	7"	-	-	-	-	-	-	-	-	-

Note:

– 3000 PSI SAE Code 61 (ISO 6162) Flange dimensions are shown below.

– BSPT and Metric ports available, consult factory.

SAE 4-Bolt Flange Port Dimensions

Standard Pressure - 3000 PSI (207 Bar)

Flange Size	SAE Code 61 Flange Dimensions (in)				
in	A	B	C	F	G
11/2"	1/2 - 13	1.406	2.750	11/2	1.062
2"	1/2 - 13	1.688	3.062	2	1.062
21/2"	1/2 - 13	2.000	3.500	21/2	1.188
3"	5/8 -11	2.438	4.188	3	1.188

Note: *Some flanges using this bolt pattern are not rated for 3000 PSI.*

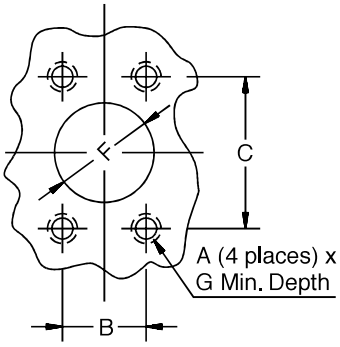

Flange Size	Metric ISO6162 Flange Dimensions (mm)				
mm	A	B	C	F	G
38	M12	35.7	69.9	38	26.9
51	M12	42.9	77.8	51	26.9
64	M12	50.8	88.9	64	30.1
76	M16	61.9	106.4	76	30.1

Note: *Some flanges using this bolt pattern are not rated for 3000 PSI.*

Seal Kits

Seal Kits are available for all piston accumulator models. When ordering seal kits, please supply the complete model and serial numbers from the name plate and specify fluid type and operating temperature.

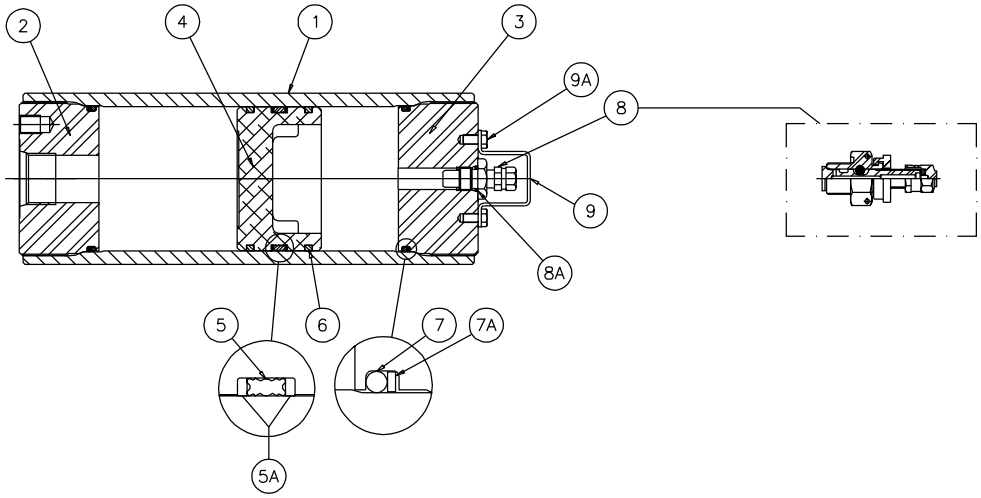

Parts List

1	Body
2	Hydraulic Cap
3	Gas Cap
4	Piston
5	V-O-ring Piston Seal
5A	V-O-ring Backups
6	PTFE Glide Rings
7	O-ring
7A	O-ring Backup
8	Gas Valve
8A	Gas Valve O-ring
9	Gas Valve Guard
9A	Screw

3000 PSI Seal Kit Numbers (Includes items 5, 5A, 6, 7, 7A, 8A)

Material	Bore Size						
	2"	3"	4"	6"	7"	9"	12"
Buna-Nitrile (Std.)	RK0200K000	RK0300K000	RK0400K000	RK0600K000	RK0700K000	RK0900K000	RK1200K000
Fluorocarbon	RK0200E000	RK0300E000	RK0400E000	RK0600E000	RK0700E000	RK0900E000	RK1200E000
EPR	RK0200D000	RK0300D000	RK0400D000	RK0600D000	RK0700D000	RK0900D000	CF*
Hydrogenated Nitrile	RK0200H000	RK0300H000	RK0400H000	RK0600H000	RK0700H000	RK0900H000	CF*
Low Temp Nitrile	RK0200Q000	RK0300Q000	RK0400Q000	RK0600Q000	RK0700Q000	RK0900Q000	RK1200Q000

**CF = Consult Factory*

Mounting, Charging & Gauging Accessories

Parker offers a wide variety of mounting, charging and gauging accessories. See “Accumulator Accessories.”

Special Options

If your application requires a piston accumulator, gas bottle, or special option that falls outside of Parker's broad offering, consult your local distributor, Parker representative, or the factory with your specific requirements. Parker has the manufacturing and engineering expertise to design and build piston accumulators to your exacting requirements, from simple modifications of standard units to complete designs. Some example of Parker's past special designs include:

- Large Bore
- High Pressure
- Special and Stainless Steel Materials
- Piston Position and Velocity Sensors and Switches
- Special Seals
- Non-Standard Capacities
- Tie Rod Construction
- Special Certifications
- Spring & Weight Loaded
- Extreme Temperatures

Consult the experts at Parker with your next piston accumulator requirement!

How to Order Piston Accumulators

Piston accumulators and gas bottles can be specified by using the symbols in the chart below to develop a model number. Select only those symbols that represent the features desired, and place them in the sequence indicated by the example at the top of the chart.

Series	Nominal Bore Size	Type of Construction	Options	Capacity	Design Pressure	Design Number	Seal Compound	Hyd. Port Modification		Gas Port Modification	
A	7	K	–	2310	D	1	K	–	–	–	–

Series	
A	Accumulator
B	Gas Bottle

Nominal Bore Size	
3	3 inches
4	4 inches
6	6 inches
7	7 inches
9	9 inches
12	12 inches

Type of Construction	
N	Threaded both ends non-A.S.M.E. mat'l standard on 2", 3", 4", 6", & 7" (3000 PSI fatigue design tested)
K	Threaded both ends A.S.M.E. mat'l standard, NOT A.S.M.E. stamped on 7" & up
L	Same as K with A.S.M.E. approval stamp 7" & up. Available as special on smaller sizes
E	Threaded both ends, CE marked (1 liter and above) or SEP marked (under 1 liter)

Bore Size/Capacity		
0029	3"	29 cu. in. (0.48 liters)
0058		58 cu. in. (0.95 liters)
0090		90 cu. in. (1.47 liters)
0116		116 cu. in. (1.90 liters)
0183		183 cu. in. (3.00 liters)
0058	4"	58 cu. in. (0.95 liters)
0116		116 cu. in. (1.90 liters)
0231		1 gal. (3.79 liters)
0347		1.5 gal. (5.69 liters)
0578		2.5 gal. (9.47 liters)
0231	6"	1 gal. (3.79 liters)
0347		1.5 gal. (5.69 liters)
0578		2.5 gal. (9.47 liters)
0924		4 gal. (15.1 liters)
1155		5 gal. (18.9 liters)
1733		7.5 gal. (28.4 liters)
2310		10 gal. (37.9 liters)
0578	7"	2.5 gal. (9.47 liters)
1155		5 gal. (18.9 liters)
1733		7.5 gal. (28.4 liters)
2310		10 gal. (37.9 liters)
3465		15 gal. (56.8 liters)
5775		25 gal. (94.6 liters)
2310	9"	10 gal. (37.9 liters)
3465		15 gal. (56.8 liters)
4620		20 gal. (75.7 liters)
5775		25 gal. (94.6 liters)
6930		30 gal. (113.6 liters)
5775	12"	25 gal. (94.6 liters)
6930		30 gal. (114 liters)
9240		40 gal. (151 liters)
11550		50 gal. (189 liters)

Consult factory for other available sizes.

Hydraulic and Gas Port Modifications Designated by 2 Digits					
1st Digit	Style	2nd Digit	Description		Min. Bore Size
Blank	Std.	Blank	Std.		
T	SAE Straight Thread Ports	A	SAE #5	.5 - 20	3"
		B	SAE #6	.562 - 18	3"
		C	SAE #8	.75 - 16	3"
		D	SAE #12	1.0625 - 12	3"
		E	SAE #16	1.3125 - 12	3"
		F	SAE #20	1.625 - 12	3"
		G	SAE #24	1.875 - 12	4"
		H	SAE #32	2.5 - 12	7"
		I	SAE #10	.875 - 14	3"
					Min. Bore
P	Flange (Code 61)	J	1 1/2"		4"
		L	2"		6"
		M	2 1/2"		6"
M	Metric Flange per ISO 6162	N	3"		7"
		T	1/2"		3"
		U	3/4"		3"
		V	1"		3"
		W	1 1/4"		3"
U	NPTF (Not Recommended)	T	3/8"		3"
		U	1/2"		3"
		V	3/4"		3"
		W	1"		3"
		X	1 1/4"		3"
		Y	1 1/2"		4"
		Z	2"		4"
			BSPP/BSPT	Metric/ISO 6149-1	
R	BSPP Parallel	A	3/8 - 19	A	M14 x 1.5
B	BSPT Taper Port	B	1/2 - 14	B	M18 x 1.5
		C	3/4 - 14	C	M22 x 1.5
G	Metric	D	1 - 11	D	M27 x 2
Y	ISO 6149-1	E	1 1/4 - 11	E	M33 x 2
		F	1 1/2 - 11	F	M42 x 2
		G	2 - 11	G	M48 x 2

Example of Optional Port Accumulator

A 4 N 0231 D 3 K T C U V

- 3: Non-std. Port
- T C: SAE #8 Hyd. Port
- U V: NPT 3/4" Gas Port

Options	
Blank	Standard Gas Cap
W	Water Service
F	SAE Fuse Port *
G	SAE Fuse Port *, Water Service
M	L07689000K Gas Valve
K	L07689000K Gas Valve, Water Service
P	SAE Fuse Port* and L07689000K
R	SAE Fuse Port* and L07689000K, Water Service

** Safety fuse assembly not included.*

Note: *ASME and CRN units available upon request.*

Design Pressure	
D	3000 PSI (All Bore Sizes)
K	2000 PSI (12" Bore only)
X	Other
For CE Marked Only	
L	250 Bar (All Bore Sizes)
H	350 Bar (See page 50)

To order safety fuse and rupture disk installed on the accumulator add the rupture pressure to the end of the model number.

Example: A7LF2310D3KPL-3000. Rupture disks are available in 100 psi increments starting at 3000 psi.

Design Number	
1	Standard
2	Metric Mounting Holes & Hyd. Port (BSPP Standard) Specify Optional Ports
3	Optional Port (Hyd. or Gas, See Port Table)
***	Special Design

Standard Ports Available (See Port Modifications Table if Using Other Than Standard Ports Shown Below)		
Bore Size	Standard Port Sizes	Metric Port Sizes
3"	SAE #12	3/4
4"	SAE #20	1
6"	SAE #24	1
7"	SAE #32	ISO 6162
9"	SAE #32	ISO 6162
12"	3" SAE Flange Code 61	ISO 6162

Seal Compound (See Catalog for Temperature Settings)	
K	Buna-Nitrile (Std)
E	Fluoroelastomer
D	EPR
H	Hydrogenated Nitrile
Q	Low Temp.
S	Special (to be specified)

Notes

Parker Hannifin
Global Accumulator Division
United States

ACP Series Piston Accumulators

With Working Pressures of 3,770, 4000 and 5000 PSI

IN THIS SECTION

Overview	37
Features & Benefits	38
Specifications	39
Models, Capacities & Dimensions	40
Ordering Information	41

ACP Series Crimped Piston Accumulators are ideal for mobile and construction equipment applications in climates as rugged as those of northern Canada and Siberia. Rated at 3770, 4000 and 5000 PSI with a design factor of four to one or greater, these accumulators have been tested and proven at -40ºF/C or below, and meet or exceed CSA/CE/ASME standards.

Key advantages of the ACP Series:

- Higher working-pressure ratings (3770/4000/5000 PSI) meet more applications with fewer sizes needed.
- Use of standard components promotes faster delivery of proven designs and lower product cost.
- Piston design prevents sudden accumulator failure and is customized to fit the application.
- Four bore sizes available for more capacity and price options.
- Patented crimped end cap connections provide superior fatigue life compared with welded designs.
- "Schrader" style gas valve (industry standard) fits existing charging equipment; "no gas valve" option also available.
- Multiple hydraulic port sizes accommodate a wider range of fittings and mounting options.
- All standard product is CRN/CSA to -40°C/F.

Fluids compatibility

Parker's seal compounds are compatible with a wide variety of fluids. Standard accumulators (with nitrile seals) may be used with petroleum-based industrial oils or water-based, flame-resistant fluids. Optional seals compatible with most industrial fluids are available with temperature ranges from -45°F to 320°F (-43°C to 160°C).

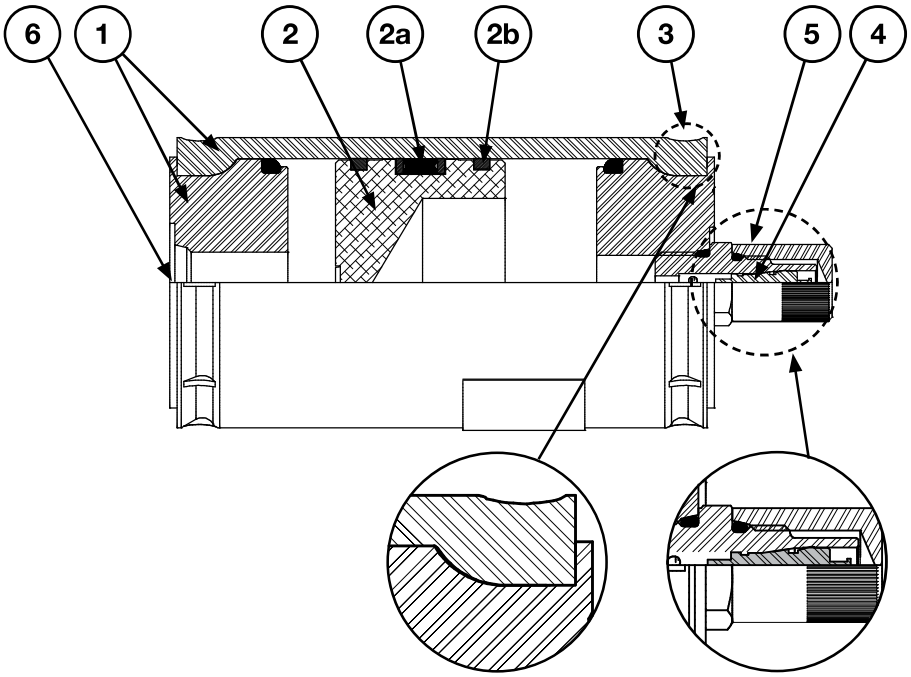

1 **High-strength, compact steel shell and cap material.** Steel shell allows heat to dissipate effectively and is micro-finished for extended seal life.

2 **Lightweight piston design** allows for fast response to reduce system shock in rapid cycling applications.

2a **Piston seal's unique, five-bladed V-O-ring** with back-up washers eliminates seal roll-over and ensures total separation of fluid and gas (40 mm size incorporates a T-seal with energized PTFE piston ring).

2b **PTFE glide rings** eliminate metal-to-metal contact between tube and piston, reducing wear and extending service life.

3 **Patented crimped design** provides high-strength coupling of caps to steel tube plus superior fatigue life versus welded type connections.

4 **"Schrader" style gas valve** is standard on all ACP accumulators for ease of precharging. (Pre-charged accumulators are available featuring specially designed threaded plug and no gas valve option.)

5 **Gas valve cap** protects valve and serves as secondary seal. Knurled cap design allows easy installation without tools.

6 **Port types** are available in a wide range of female sizes in both SAE and BSPP styles.

Actual Bore Sizes & Maximum Flow Rates

Nominal Bore Size (mm)	Actual Bore Size		Max. Recommended Flow*	
	(in)	(mm)	GPM	LPM
40	1.50	38.20	55	209
50	2.02	51.44	100	380
80	3.00	76.20	220	834
100	4.03	102.4	397	1504

***Note:** Based on 120 in/sec maximum piston speed, port & fitting size will become limiting factors for most applications.*

Gas Valves Options

ACP Series accumulators are available either with the industry-standard "Shrader" style gas valve for ease of precharging or poppet style valve (L07689000*).

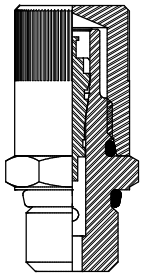

870636H0QQ

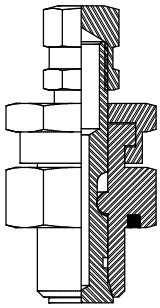

L07689000*

Seal Material Options

Seal Code	Polymer	**Recommended Operating Temperature Range	Maximum Temperature with Reduced Life	General Application and Compatibility*
K	Buna-Nitrile	-20°F to 165°F -29°C to 74°C	200°F 93°C	Parker's Standard Compound – Compatible with most mineral oil-based fluids
E	Fluorocarbon Elastomer	-10°F to 250°F -23°C to 121°C	400°F 204°C	Compatible with most mineral oil-based fluids at higher temperatures and some exotic fluids
H	Hydrogenated Nitrile	-25°F to 320°F -32°C to 160°C	350°F 177°C	Compatible with most oil-based and biodegradable fluids, maintains sealing effectiveness at a wide range of temperatures
Q	Low Temp. Nitrile	-45°F to 160°F -43°C to 71°C	200°F 93°C	Compatible with most mineral oil-based fluids and maintains sealing effectiveness at low temperatures

**Consult local distributor or factory for fluid compatibility information.*

***The temperatures listed indicate the operating temperature range of the seals, not the accumulator.*

Mounting, Charging & Gauging Accessories

Parker offers a wide variety of mounting, charging and gauging accessories. See "Accumulator Accessories."

3,770 PSI (260 Bar Metric) & 4,000 PSI (275 Bar Metric) Crimped Piston Accumulator with Gas Valve

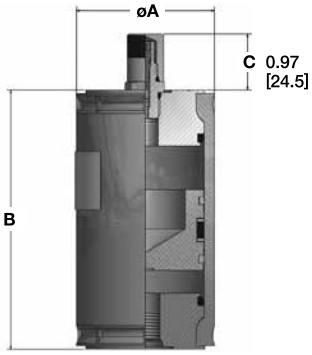

	Model Number	Fluid Volume		Gas Volume		Diameter	Estimated Length	Estimated Dry Weight	
		Liters	cu. in.	Liters	cu. in.	øA in (mm)	B in (mm)	LBS	(Kg)
	3,770 PSI MODELS								
40 mm BORE	ACP04AA002R1KTB	0.92	0.02	0.02	1.2	1.74 (44.1)	3.02 (76.6)	2	0.91
	ACP04AA008R1KTB	4.58	0.08	0.08	4.9		5.08 (129.2)	2	0.91
	ACP04AA016R1KTB	9.46	0.15	0.16	9.8		7.84 (199.2)	2	0.91
	ACP04AA032R1KTB	19.23	0.31	0.32	19.5		13.36 (339.3)	3	1.36
	4,000 PSI MODELS								
50 mm BORE	ACP05AA008E1KTC	3.67	0.06	0.08	4.9	2.38 (60.3)	4.47 (113.5)	4	1.81
	ACP05AA016E1KTC	8.55	0.14	0.16	9.8		5.98 (151.9)	4	1.81
	ACP05AA032E1KTC	18.31	0.30	0.32	19.5		9.01 (228.9)	5	2.27
	ACP05AA050E1KTC	29.3	0.48	0.50	30.5		12.43 (315.7)	6	2.72
	ACP05AA075E1KTC	44.55	0.73	0.75	45.8		17.16 (435.9)	5	2.27
	ACP05AA100E1KTC	56.76	0.93	0.95	58.0		20.95 (532.1)	9	4.08
80 mm BORE	ACP08AA032E1KTI	15.44	0.25	0.32	19.5	3.56 (90.4)	6.73 (171.0)	11	4.99
	ACP08AA050E1KTI	26.48	0.43	0.50	30.5		8.29 (210.5)	13	5.90
	ACP08AA075E1KTI	41.73	0.68	0.75	45.8		10.45 (265.4)	14	6.35
	ACP08AA100E1KTI	53.94	0.88	0.95	58.0		12.18 (309.3)	16	7.26
	ACP08AA150E1KTI	87.5	1.43	1.50	91.5		16.93 (430.0)	20	9.07
	ACP08AA200E1KTI	118.01	1.93	2.00	122.1		21.25 (539.7)	23	10.43
	ACP08AA300E1KTI	179.04	2.93	3.00	183.1		29.89 (759.2)	30	13.61
100 mm BORE	ACP10AA075E1KTD	36.16	0.59	0.75	45.8	4.76 (120.9)	8.47 (215.2)	25	11.34
	ACP10AA100E1KTD	48.37	0.79	0.95	58.0		9.43 (239.5)	26	11.79
	ACP10AA150E1KTD	81.83	1.34	1.50	91.5		12.06 (306.4)	30	13.61
	ACP10AA200E1KTD	112.44	1.84	2.00	122.1		14.46 (367.2)	33	14.97
	ACP10AA300E1KTD	173.46	2.84	3.00	183.1		19.24 (488.7)	40	18.14
	ACP10AA400E1KTD	234.49	3.84	4.00	244.1		24.03 (310.3)	47	21.31
	ACP10AA600E1KTD	356.54	5.84	6.00	366.1		33.60 (853.4)	60	27.21
	ACP10AA800E1KTD	478.58	7.84	8.00	488.2		43.17 (1096.6)	74	33.56

5,000 PSI (345 Bar Metric) Crimped Piston Accumulator with Gas Valve

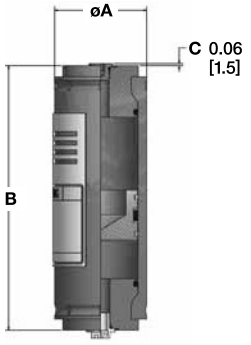

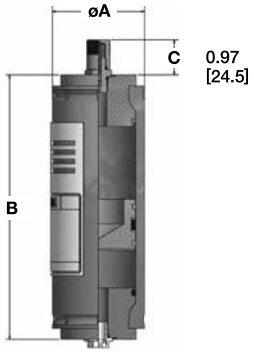

	Model Number	Fluid Volume		Gas Volume		Diameter	Estimated Length	Estimated Dry Weight	
		Liters	cu. in.	Liters	cu. in.	øA in (mm)	B in (mm)	LBS	(Kg)
50 mm BORE	ACP05AA008C1KTC	3.67	0.06	0.08	4.9	2.50 (63.5)	5.71 (145.1)	6	2.72
	ACP05AA016C1KTC	8.55	0.14	0.16	9.8		7.23 (183.6)	6	2.72
	ACP05AA032C1KTC	18.31	0.30	0.32	19.5		10.26 (260.6)	8	3.63
	ACP05AA050C1KTC	29.3	0.48	0.50	30.5		13.67 (347.3)	8	3.63
	ACP05AA075C1KTC	44.55	0.73	0.75	45.8		18.41 (467.6)	12	5.44
	ACP05AA100C1KTC	56.76	0.93	0.95	58.0		22.20 (563.8)	13	5.90

How to Order ACP Series Piston Accumulators

Piston accumulators and gas bottles can be specified by using the symbols in the chart below to develop a model number. Select only those symbols that represent the features desired, and place them in the sequence indicated by the example at the top of the chart.

AC Series	Piston Type	Model	Type of Construction	Options	Capacity	Working Pressure	Design Number	Seal Compound	Port Size
AC	P	05	A	A	075	E	1	K	TC

Piston Type

P	Piston Accumulator
G	Gas Bottle/Attenuator

Model

04	40mm (1.5") Bore
05	50mm (2") Bore
08	80mm (3") Bore
10	100mm (4") Bore

Type of Construction

A	Standard
E	European

Options

A	Gas Valve (Standard)
D	No Gas Valve
M	MS Gas Valve

Model/Capacity

008		0.08 liter	5 cu. in.
016	04	0.16 liter	10 cu. in.
032		0.32 liter	20 cu. in.
016		0.16 liter	10 cu. in.
032		0.32 liter	20 cu. in.
050	05	0.50 liter	31 cu. in.
075		0.75 liter	46 cu. in.
100		0.95 liter	58 cu. in.
032		0.32 liter	20 cu. in.
050		0.50 liter	31 cu. in.
075		0.75 liter	46 cu. in.
100	08	0.95 liter	58 cu. in.
150		1.50 liter	92 cu. in.
200		2.00 liter	122 cu. in.
300		3.00 liter	183 cu. in.
075		0.75 liter	46 cu. in.
100		0.95 liter	58 cu. in.
150		1.50 liter	92 cu. in.
200	10	2.00 liter	122 cu. in.
300		3.00 liter	183 cu. in.
400		4.00 liter	244 cu. in.
600		6.00 liter	366 cu. in.
800		8.00 liter	488 cu. in.

Design Number

1	Standard

Working Pressure

E	275 Bar (4000 PSI)
R	260 Bar (3770 PSI) 40mm only
C	345 Bar (5000 PSI) 50mm only

Seal Compounds

K	Nitrile (Std)
H	Hydrogenated Nitrile
E	Fluoroelastomer
S	Special
Q	Q Seal

Ports (see Availability Table)

TB	Female SAE #6
TC	Female SAE #8
TI	Female SAE #10
TD	Female SAE #12
TE	Female SAE #16
RA	Female BSPP 3/8-19
RB	Female BSPP 1/2-14
RC	Female BSPP 3/4-14
RD	Female BSPP 1-11

Port Availability

Model	Female SAE					Female BSPP			
	6	8	10	12	16	3/8	1/2	3/4	1
04	•					•	★		
05	★	•	★	★	†	★	★	•	
08	★	★	•	★	★†	★	★	★	•
10	★	★	★	•	★†	★	★	★	•

• = Standard ★ = Optional

† For SAE 16 and CE together, consult factory

Notes

Parker Hannifin
Global Accumulator Division
United States

Series 4000 & 5000 Piston Accumulators

IN THIS SECTION

Overview	43
Specifications	44
Options	45
Models, Capacities & Dimensions	
Series 4000	46
Series 5000	47
Port Options	48
Parts & Accessories	49
Ordering Information	50

Features

- Heavy Duty Service with 4000 to 5000 PSI Operating Pressure
- 3" thru 9" Bores with Over 20 Standard Capacities
- V-O-ring Piston Seals
- Serviceable Threaded End Construction
- Five Standard Seal Options to Handle a Variety of Fluids & Temperatures
- Certifications Available: ASME, DNV, ABS, AS1210, SELO, CRN, GOST, CE
- Temperature Ranges -45° to 320°F

Materials

- Shell – high strength steel
- Caps – steel
- Pistons – aluminum
- Gas Valve Cartridge – stainless steel
- Gas Valve Protector – steel
- Piston Glide Rings – PTFE
- Piston & End Seals – various polymers
- Piston Seal Backups – PTFE

Actual Bore Sizes & Maximum Flow Rates

Nominal Bore Size (in)	Actual Bore Size		Max. Recommended Flow*	
	(in)	(mm)	GPM	LPM
3	3.00	76.20	220	834
4	4.03	102.4	397	1504
6	5.78	146.9	818	3096
7	7.00	178	1199	4538
9	9.00	229	1982	7502

***Note:** Based on 120 in/sec maximum piston speed, port & fitting size will become limiting factors for most applications.*

Pressure Ratings

Parker 4000 & 5000 PSI piston accumulators are all rated at minimum 4 to 1 design factors.

Fluids

Parker's piston accumulators are compatible with a wide variety of fluids. Standard accumulators (with nitrile seals) may be used with petroleum-based industrial oils or water-based flame resistant fluids. Optional seals compatible with most industrial fluids are available with temperature ranges from -45°F to 320°F (-43°C to 160°C).

Precharge

Units are shipped with a nominal nitrogen precharge as standard. For specific precharge pressures, specify at the time of order.

Standard Ports

The following ports are supplied as standard on all fluid ends and on the gas end of accumulators ordered for use with gas bottles:

Bore Size	Standard Ports	
	Standard Models SAE Port	Metric Models BSPP Port (in)
3	SAE #12	3/4
4	SAE #16	1
6	SAE #16	1
7	2" Code 62 Flange	2" Metric ISO 6162 Flange
9	2" Code 62 Flange	2" Metric ISO6162 Flange

Gas Valve

Series 4000 accumulators and auxiliary gas bottles are equipped with a high pressure cored gas valve cartridge as standard.

Series 5000 accumulators and gas bottles with 3" through 6" bores are supplied with a high pressure cored gas valve as standard. Models with 7" and 9" bores are supplied with a heavy duty, high-pressure, poppet-type gas valve cartridge (L07689000K) as standard.

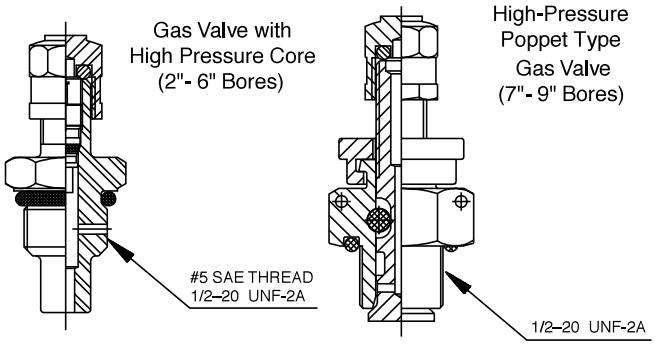

***Note:** The standard Parker gas cap will accept either style gas valve.*

Available Options

If your application requires a piston accumulator, gas bottle, or special option that falls outside of Parker's broad offering, consult your local distributor, Parker representative, or the factory with your specific requirements. Parker has the manufacturing and engineering expertise to design and build piston accumulators to your exacting requirements, from simple modifications of standard units to complete designs. Some example of Parker's past special designs include:

- Special and Stainless Steel Materials
- High Pressures
- Extreme Temperatures
- Piston Position and Velocity Sensors and Switches
- Special Seals
- Non-Standard Capacities
- Water Service
- Ports
- Fixed Gauge Mounts
- Fuse Plug Assemblies

Auxiliary Gas Bottles

When space does not permit the installation of the required piston accumulator, a smaller accumulator may be used by connecting it to an auxiliary gas bottle(s) that can be located in a nearby spot where space is available. In some cases, a piston accumulator and gas bottle combination may be more economical, especially large capacity sizes. Piston travel, confined to the accumulator, must be calculated with ample margins to store the required fluid.

Gas Valve Option (M) - Series 4000 & 5000

3" thru 6" Bore Sizes

A heavy duty, high-pressure, poppet-type gas valve cartridge (L07689000K) is available as an option (M) – specify when ordering.

Note: *This valve is standard on 7" and 9" bore sizes.*

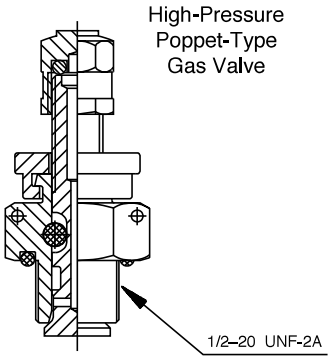

L07689000K

Seal Material Options

Seal Code	Polymer	Recommended Operating Temperature Range	Maximum Temperature with Reduced Life	General Application and Compatibility*
K	Buna Nitrile	-20°F to 165°F -29°C to 74°C	200°F 93°C	Parker's Standard Compound – Compatible with most mineral oil-based fluids
E	Fluorocarbon Elastomer	-10°F to 250°F -23°C to 121°C	400°F 204°C	Compatible with most mineral oil-based fluids at higher temperatures and some exotic fluids
D	Ethylene Propylene	-40°F to 250°F -40°C to 121°C	300°F 149°C	Compatible with most phosphate ester fluids and some synthetic fluids
H	Hydrogenated Nitrile	-25°F to 320°F -32°C to 160°C	350°F 177°C	Compatible with most oil-based and biodegradable fluids, maintains sealing effectiveness at a wide range of temperatures
Q	Low Temp. Nitrile	-45°F to 160°F -43°C to 71°C	200°F 93°C	Compatible with most mineral oil-based fluids and maintains sealing effectiveness at low temperatures

**Consult local distributor or factory for fluid compatibility information. Temperature ranges may vary depending upon fluid used in hydraulic system.*

***The temperature listed indicates the operating temperature range of the seals, not the accumulator. For the Minimum Design Metal Temperature (MDMT) of ASME certified accumulators, refer to page 47.*

Safety Fuse Options (F)

Safety Fuses are used as a safety device on accumulators and gas bottles to prevent over-pressurization of gas due to external heat or hydraulic pressure (set at 140% of maximum system pressure to avoid rupture disk fatigue and premature failure). The rupture disks are calibrated to rupture at a pre-determined pressure. Safety fuses are available on most sizes of piston accumulators. Safety fuses can be installed on all piston accumulators by using a fuse adapter. 4" bore units and above can be equipped with a fuse port machined in the gas cap by specifying the "Safety Fuse Option" (F) at the time of order in the model code, see "How to Order." The safety fuse assembly and/or fuse adapter must be ordered separately.

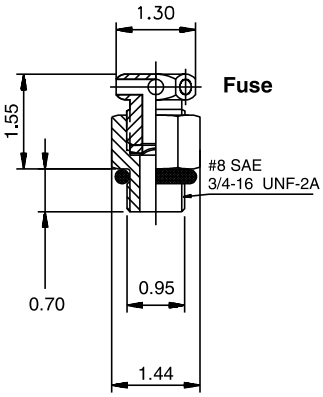

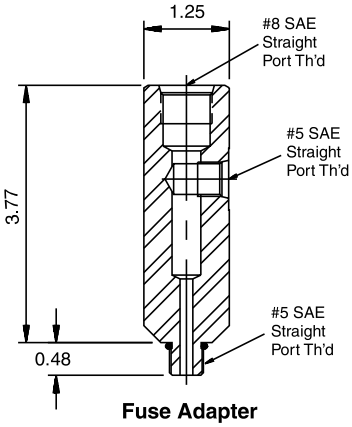

Description	Part Number
Safety Fuse Assembly[1]	086471xxxx
Replacement Rupture Disks	756003xxxx
Fuse Adapter	1468970002

[1] Assembly includes housing and rupture disk, xxxx = pressure setting in 100 PSI increments, i.e., for an assembly with a 2000 PSI setting, order P/N 0864712000.

Note: *ASME and CRN units available upon request.*

4000 PSI (276 Bar Metric) Piston Accumulators for Oil and Water Service

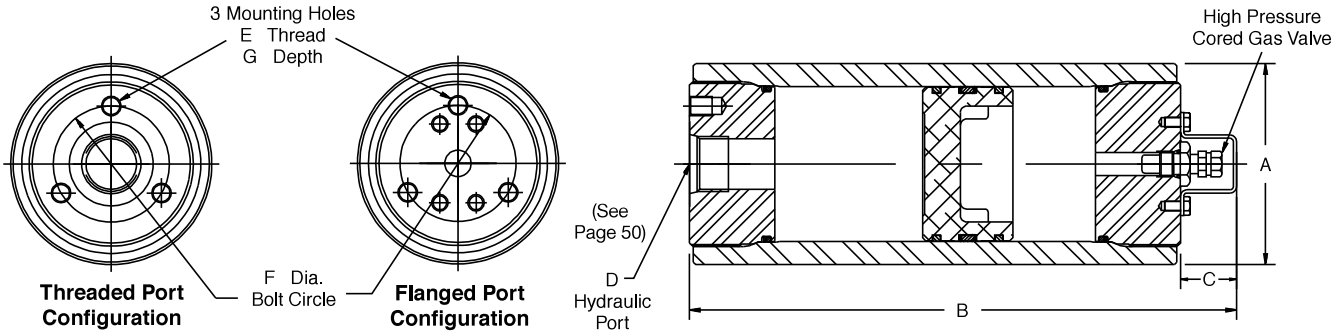

Model No.	Fluid Volume		Gas Volume		A in (mm)	B (in)	C in (mm)	E in (mm)	F in (mm)	G in (mm)	Weight lbs (Kg)
Oil Service	(cu in)	gal (Liters)	cu in	(Liters)							
A2N0005E1K (E2K)	5	(0.08)	6.5	(0.11)	2.50 (64)	6.76 (172)	1.06 (27)	–	–	–	6 (2.7)
A2N0010E1K (E2K)	10	(0.16)	11.5	(0.19)		8.31 (211)					6 (2.7)
A2N0015E1K (E2K)	15	(0.25)	16.5	(0.24)		9.78 (250)					7 (3.2)
A2N0029E1K (E2K)	29	1 Pint (0.48)	30.5	(0.50)		14.19 (360)					9 (4.1)
A2N0058E1K (E2K)	58	1 Quart (0.95)	59.5	(0.98)		23.19 (589)					14 (6.1)
A3N0029E1K (E2K)	29	1 Pint (0.48)	34	(0.56)	3.75 (96)	10.25 (260)	1.13 (29)	3/8 - 24 (M10)	2.25 (60)	0.56 (15)	17 (7.8)
A3N0058E1K (E2K)	58	1 Quart (0.95)	63	(1.03)		14.34 (364)					25 (11.1)
A3N0090E1K (E2K)	90	1.5 Quart (1.42)	95	(1.56)		18.94 (481)					33 (14.8)
A3N0116E1K (E2K)	116	1/2 Gal. (1.90)	121	(1.98)		22.56 (573)					39 (17.7)
A3N0183E1K (E2K)	183	3 Quart (2.84)	188	(3.08)		32.06 (814)					56 (25.4)
A4N0058E1K (E2K)	58	1 Quart (0.95)	68	(1.11)	5.00 (127)	12.06 (306)	1.13 (29)	1/2 - 20 (M12)	3.25 (82)	0.75 (18)	37 (16.6)
A4N0116E1K (E2K)	116	1/2 Gal. (1.90)	126	(2.06)		16.62 (422)					46 (20.6)
A4N0231E1K (E2K)	231	1 Gal. (3.79)	241	(3.95)		25.62 (651)					63 (28.7)
A4N0347E1K (E2K)	347	1-1/2 Gal. (5.69)	357	(5.85)		34.75 (883)					81 (36.8)
A4N0578E1K (E2K)	578	2-1/2 Gal. (9.47)	588	(9.64)		52.81 (1341)					117 (53.0)
A6N0231E1K (E2K)	231	1 Gal. (3.79)	266	(4.36)	7.06 (180)	19.18 (487)	1.13 (29)	1/2 - 20 (M12)	4.38 (110)	0.75 (18)	110 (49.8)
A6N0347E1K (E2K)	347	1-1/2 Gal. (5.69)	382	(6.26)		23.62 (600)					126 (57.2)
A6N0578E1K (E2K)	578	2-1/2 Gal. (9.47)	613	(10.0)		32.43 (824)					158 (71.9)
A6N0924E1K (E2K)	924	4 Gal. (15.1)	959	(15.70)		45.62 (1159)					207 (93.9)
A6N1155E1K (E2K)	1155	5 Gal. (18.9)	1190	(19.50)		54.43 (1383)					239 (109)
A6N1733E1K (E2K)	1733	7-1/2 Gal. (28.4)	1768	(29.00)		76.43 (1941)					320 (145)
A6N2310E1K (E2K)	2310	10 Gal. (37.9)	2345	(38.40)		98.43 (2500)					401 (182)

PHASING OUT

Notes:

– For Water Service add "W" after construction code, see "How to Order" information.

– Standard accumulators are designated E1K in model number, metric are E2K.

– See "Port Options" for complete listing of standard and optional ports.

– When accumulators are to be used with gas bottles, order "Accumulators for Use with Gas Bottles."

5000 PSI (345 Bar Metric) Piston Accumulators for Oil and Water Service

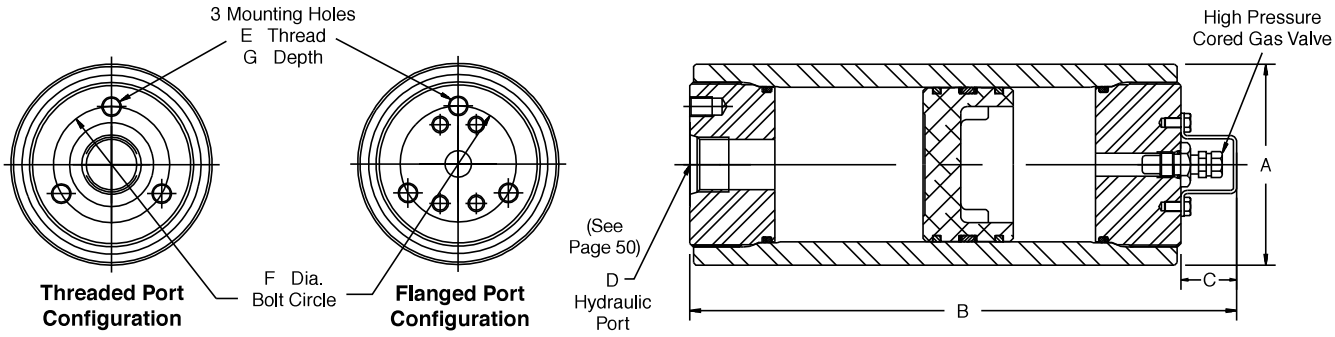

Model No.	Fluid Volume		Gas Volume		A in (mm)	B in (mm)	C in (mm)	E in (mm)	F in (mm)	G in (mm)	Weight lbs (Kg)
Oil Service	(cu in)	Gal (Liters)	cu in	(Liters)							
A2N0005C1K (C2K)	5	(0.08)	6.5	(0.11)	2.63 (67)	6.76 (172)	1.06 (27)	–	–	–	6 (2.8)
A2N0010C1K (C2K)	10	(0.16)	11.5	(0.19)		8.31 (211)					7 (3.2)
A2N0015C1K (C2K)	15	(0.25)	16.5	(0.24)		9.78 (248)					8 (3.7)
A2N0029C1K (C2K)	29	1 Pint (0.48)	30.5	(0.50)		14.19 (360)					11 (5.0)
A2N0058C1K (C2K)	58	1 Quart (0.95)	59.5	(0.98)		23.19 (589)					17 (7.6)
A3N0029C1K (C2K)	29	1 Pint (0.48)	34	(0.56)	4.00 (102)	10.25 (260)	1.13 (29)	3/8 - 12 (M10)	2.25 (60)	0.56 (15)	21 (9.6)
A3N0058C1K (C2K)	58	1 Quart (0.95)	63	(1.03)		14.34 (364)					28 (12.5)
A3N0090C1K (C2K)	90	1.5 Quart (1.47)	95	(1.56)		18.94 (481)					35 (15.7)
A3N0116C1K (C2K)	116	1/2 Gal. (1.90)	121	(1.98)		22.56 (573)					40 (18.3)
A3N0183C1K (C2K)	183	3 Quart (3.00)	188	(3.08)		32.06 (814)					55 (25.0)
A4N0058C1K (C2K)	58	1 Quart (0.95)	68	(1.11)	5.25 (134)	12.06 (306)	1.13 (29)	1/2 - 20 (M12)	3.25 (82)	0.75 (18)	43 (19.4)
A4N0116C1K (C2K)	116	1/2 Gal. (1.90)	126	(2.06)		16.62 (422)					54 (24.6)
A4N0231C1K (C2K)	231	1 Gal. (3.79)	241	(3.95)		25.62 (651)					77 (34.9)
A4N0347C1K (C2K)	347	1-1/2 Gal. (5.69)	357	(5.85)		34.75 (883)					100 (45.4)
A4N0578C1K (C2K)	578	2-1/2 Gal. (9.47)	588	(9.64)		52.81 (1341)					146 (66.2)
A6N0231C1K (C2K)	231	1 Gal. (3.79)	266	(4.36)	7.50 (191)	19.18 (487)	1.13 (29)	1/2 - 20 (M12)	4.38 (110)	0.75 (18)	128 (57.9)
A6N0347C1K (C2K)	347	1-1/2 Gal. (5.69)	382	(6.26)		23.62 (600)					148 (67.3)
A6N0578C1K (C2K)	578	2-1/2 Gal. (9.47)	613	(10.00)		32.43 (824)					190 (86.0)
A6N0924C1K (C2K)	924	4 Gal. (15.10)	959	(15.70)		45.62 (1159)					252 (114)
A6N1155C1K (C2K)	1155	5 Gal. (18.90)	1190	(19.50)		54.43 (1383)					293 (133)
A6N1733C1K (C2K)	1733	7-1/2 Gal. (28.40)	1768	(29.00)		76.43 (1941)					396 (180)
A6N2310C1K (C2K)	2310	10 Gal. (37.90)	2345	(38.40)		98.43 (2500)					499 (227)
A7K1155C1K (C2K)	1155	5 Gal. (18.90)	1190	(19.50)	9.09 ±0.06 (231.1 ±1.5)	42.50 (1080)	1.63 (41)	5/8 - 18 (M16)	5.75 (146)	0.94 (24)	385 (175)
A7K1733C1K (C2K)	1733	7-1/2 Gal. (28.40)	1768	(29.00)		57.50 (1461)					495 (226)
A7K2310C1K (C2K)	2310	10 Gal. (37.90)	2345	(38.40)		72.50 (1842)					611 (277)
A7K3465C1K (C2K)	3465	15 Gal. (56.85)	3520	(57.75)		102.50 (2604)					837 (380)
A9K2310C1K (C2K)	2310	10 Gal. (37.90)	2400	(39.37)	11.78 ±0.09 (299.2 ±2.3)	50.75 (1289)	1.63 (41)	3/4-16 (M19)	7.00 (178)	1.13 (29)	831 (377)
A9K3465C1K (C2K)	3465	15 Gal. (56.85)	3555	(58.33)		68.94 (1751)					1064 (483)
A9K4620C1K (C2K)	4620	20 Gal. (75.80)	4710	(77.27)		87.12 (2213)					1298 (589)
A9K5775C1K (C2K)	5775	25 Gal. (94.75)	5865	(96.23)		105.25 (2673)					1532 (695)
A9K6930C1K (C2K)	6930	30 Gal. (113.70)	7020	(115.18)		123.43 (3135)					1765 (801)

PHASING OUT

The Minimum Design Metal Temperature (MDMT) for ASME certified piston accumulators presented in this section is 20°F (-7°C).

Notes:

– For Water Service add "W" after construction code, see "How to Order" information.

– Standard accumulators are designated C1K in model number, metric are C2K.

– See "Port Options" for complete listing of standard and optional ports.

– ASME/DNV/ABS/AS1210/SELO/CRN/GOST/CE certified accumulators and gas bottles are available.

– 2", 3", 4" & 6" bores standard with cored gas valves. Poppet type (L07689000K) gas valve available as an option.

Optional Ports

The following ports are available as options on all piston accumulators.

SAE Straight Thd.			Code 62 Flange				NPT			BSPP			ISO 6149-1		
Port Size	Port Code	Min. Bore	Port Size	Port Code		Min. Bore	Port Size	Port Code	Min. Bore	Port Size	Port Code	Min. Bore	Port Size	Port Code	Min. Bore
				Inch	Metric										
#5	TA	3"	1"	PG	MG	4"	3/8"	UT	3"	3/8"	RA	3"	M14	YA	3"
#6	TB	3"	1¼"	PH	MH	4"	1/2"	UU	3"	1/2"	RB	3"	M18	YB	3"
#8	TC	3"	1½"	PP	MV	6"	3/4"	UV	3"	3/4"	RC	3"	M22	YC	3"
#10	TI	3"	2"	PQ	MQ	6"	1"	UW	3"	1"	RD	3"	M27	YD	3"
#12	TD	3"	2½"	PR	—	7"	1¼"	UX	3"	1¼"	RE	3"	M33	YE	3"
#16	TE	3"	3"	PS	—	9"	1½"	UY	4"	1½"	RF	4"	M42	YF	3"
—	—	—	—	—	—	—	2"	UZ	4"	2"	RG	4"	—	—	—

Notes:

– 1" thru 2" flanges are to standard SAE Code 62 dimensions, 2-1/2" to "Socket Weld Flange Adapter Pattern", dimensions are shown below. Metric pattern supplied on 276 Bar Metric units unless otherwise specified.

– BSPT and Metric ports available, consult factory.

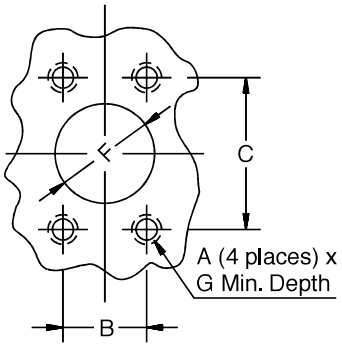

SAE 4-Bolt Flange Dimensions

Code 62 (ISO 6162) (thru 2" diameter) – 6000 PSI (410 Bar)

Flange Size		SAE Flange Dimensions (in)					Metric SAE Flange Dimensions (mm)				
in	mm	A	B	C	F	G	A	B	C	F	G
1½"	38	5/8 - 11	1.438	3.125	1½	1.375	M16	36.5	79.4	38	34.9
2"	50	3/4 - 10	1.750	3.812	2	1.500	M20	44.5	96.8	50	38.1
2½"	—	7/8 - 9	2.312	4.875	2½	1.625	—	—	—	—	—

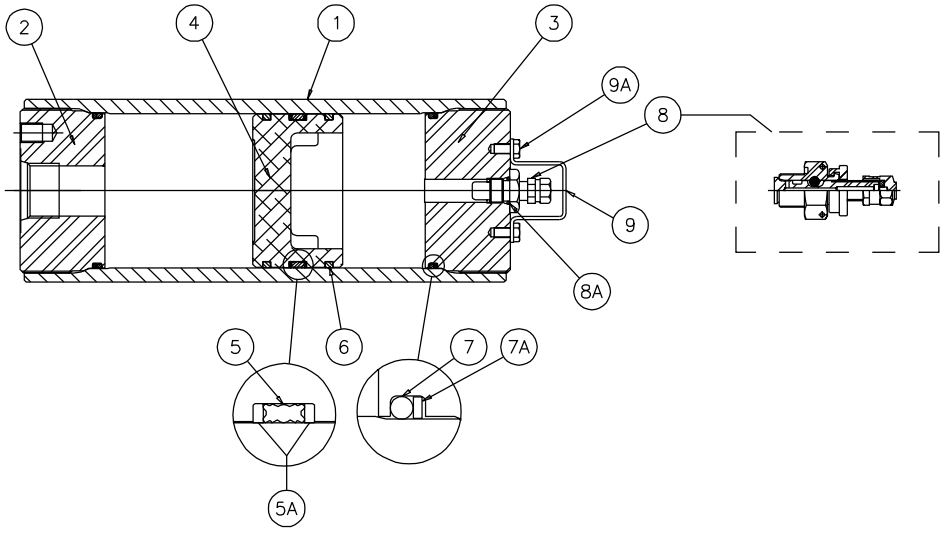

Item Part Description

1	Body
2	Hydraulic Cap
3	Gas Cap
4	Piston
5	V-O-Ring
5A	V-O-Ring Back-Up Washers
6	PTFE Ring (Piston)
7	O-Ring
7A	O-Ring Back-Up Washer
8	Gas Valve
8A	Gas Valve O-Ring
9	Gas Valve Guard
9A	Screw

4000 & 5000 PSI Seal Kit Numbers (Includes items 5, 5A, 6, 7, 7A, 8A)

Material	Bore Size					
	2"	3"	4"	6"	7"	9"
Buna-Nitrile (Std.)	RK0200K000	RK0300K000	RK0400K000	RK0600K000	RK0700K000	RK0900K000
Fluorocarbon	RK0200E000	RK0300E000	RK0400E000	RK0600E000	RK0700E000	RK0900E000
EPR	RK0200D000	RK0300D000	RK0400D000	RK0600D000	RK0700D000	RK0900D000
Hydrogenated Nitrile	RK0200H000	RK0300H000	RK0400H000	RK0600H000	RK0700H000	RK0900H000
Low Temp Nitrile	RK0200Q000	RK0300Q000	RK0400Q000	RK0600Q000	RK0700Q000	RK0900Q000

Mounting, Charging & Gauging Accessories

Parker offers a wide variety of mounting, charging and gauging accessories. See “Accumulator Accessories.”

Charging Kit Part No. 870816 5000

Standard Assembly LH Connection with 5000 PSI Gauge

Special Options

If your application requires a piston accumulator, gas bottle, or special option that falls outside of Parker’s broad offering, consult your local distributor, Parker representative, or the factory with your specific requirements. Parker has the manufacturing and engineering expertise to design and build piston accumulators to your exacting requirements, from simple modifications of standard units to complete designs. Some example of Parker’s past special designs include:

- High Pressure
- Special and Stainless Steel Materials
- Piston Position and Velocity Sensors and Switches
- Special Seals
- Non-Standard Capacities
- Tie Rod Construction
- Special Certifications
- Spring & Weight Loaded
- Extreme Temperatures
- Water Service

Consult the experts at Parker with your next piston accumulator requirement!

How to Order Piston Accumulators

Piston accumulators can be specified by using the symbols in the chart below to develop a model number. Select only those symbols that represent the features desired, and place them in the sequence indicated by the example at the top of the chart.

Series	Nominal Bore Size	Type of Construction	Options	Capacity	Design Pressure	Design Number	Seal Compound	Hyd. Port Modification		Gas Port Modification	
A	7	K	–	2310	C	1	K	–	–	–	–

Series	
A	Accumulator
B	Gas Bottle

Nominal Bore Size	
3	3 inches
4	4 inches
6	6 inches
7	7 inches
9	9 inches

Type of Construction	
N	Threaded both ends non-ASME mat'l standard on 2", 3", 4", 6"
K	Threaded both ends A.S.M.E. mat'l standard, NOT A.S.M.E. stamped on 7" & up
L	Same as K with A.S.M.E. approval stamp 7" & up. Available as special on smaller sizes
E	Threaded both ends, CE marked (1 liter and above) or SEP marked (under 1 liter)

Options	
Blank	Standard Gas Cap
W	Water Service
F	SAE Fuse Port *
G	SAE Fuse Port *, Water Service
M	L07689000K Gas Valve
L	L07689000K Gas Valve, Water Service
P	SAE Fuse Port* and L07689000K
R	SAE Fuse Port* and L07689000K, Water Service

** Safety fuse assembly not included.*
***Note:** ASME and CRN units available upon request.*

Bore Size/Capacity		
0029	3"	29 cu. in. (0.48 liters)
0058		58 cu. in. (0.95 liters)
0090		90 cu. in. (1.47 liters)
0116		116 cu. in. (1.90 liters)
0183		183 cu. in. (3.00 liters)
0058	4"	58 cu. in. (0.95 liters)
0116		116 cu. in. (1.90 liters)
0231		1 gal. (3.79 liters)
0347		1.5 gal. (5.69 liters)
0578		2.5 gal. (9.47 liters)
0231	6"	1 gal. (3.79 liters)
0347		1.5 gal. (5.69 liters)
0578		2.5 gal. (9.47 liters)
0924		4 gal. (15.1 liters)
1155		5 gal. (18.9 liters)
1733		7.5 gal. (28.4 liters)
2310		10 gal. (37.9 liters)
1155	7"	5 gal. (18.9 liters)
1733		7.5 gal. (28.4 liters)
2310		10 gal. (37.9 liters)
3465		15 gal. (56.8 liters)
2310	9"	10 gal. (37.9 liters)
3465		15 gal. (56.8 liters)
4620		20 gal. (75.8 liters)
5775		25 gal. (94.6 liters)
6930		30 gal. (114 liters)

Consult factory for other available sizes.

Design Pressure	
C	5000 PSI
E	4000 PSI
H	350 Bar (CE marked only)

To order safety fuse and rupture disk installed on the accumulator add the rupture pressure to the end of the model number.

Example: A7LF2310D3KPL-3000. Rupture disks are available in 100 psi increments starting at 3000 psi.

Design Number	
1	Standard Ports
2	Metric Mounting Holes & Hyd. Port (BSPP/Metric Flange Standard) Specify Optional Ports
3	Optional Port (Hyd. or Gas, See Port Modifications Table)
***	Special Design

Hydraulic and Gas Port Modifications Designated by 2 Digits

1st Digit	Style	2nd Digit	Description	Min. Bore Size
Blank	Std.	Blank	Std.	
T	SAE Straight Thread Ports	A	SAE #5 (1/2 - 20)	2"
		B	SAE #6 (9/16 - 18)	2"
		C	SAE #8 (3/4 - 16)	2"
		D	SAE #12 (1 1/16 - 12)	2"
		E	SAE #16 (1 5/16 - 12)	3"
		F	SAE #20 (1 5/8 - 12)	3"
		G	SAE #24 (1 7/8 - 12)	4"
		H	SAE #32 (2 1/2 - 12)	7"
		I	SAE #10 (7/8 - 14)	2"
		6000 PSI (Code 62)		**Min. Bore**
P	Flange Code 62	F	3/4"	4"
		G	1"	4"
		H	1 1/4"	4"
M	Metric Flange per ISO 6162	P	1 1/2"	6"
		Q	2"	6"
		R*	2 1/2"	7"
		S*	3"	9"
U	NPTF (Not Recommended)	T	3/8"	2"
		U	1/2"	2"
		V	3/4"	2"
		W	1"	2"
		X	1 1/4"	2"
		Y	1 1/2"	4"
		Z	2"	4"
		BSPP/BSPT		**Metric/ISO**
R	BSPP Parallel	A	3/8 - 19	A M14 x 1.5
B	BSPT Taper Port	B	1/2 - 14	B M18 x 1.5
G	Metric	C	3/4 - 14	C M22 x 1.5
Y	ISO 6149-1	D	1 - 11	D M27 x 2
		E	1 1/4 - 11	E M33 x 2
		F	1 1/2 - 11	F M42 x 2
		G	2 - 11	G M48 x 2

** For socket weld flange. Not available with metric flange.*

Example of Optional Port Accumulator

A 4 N 0231 C 3 K T C U V

- 3 — Non-std. Port
- T C — SAE #8 Hyd. Port
- U V — NPT 3/4" Gas Port

Standard Ports Available (See Port Modifications Table if Using Other Than Standard Ports Shown Below)

Bore Size	Standard Ports	Metric (BSPP) Ports
3"	SAE #12	3/4
4"	SAE #16	1
6"	SAE #16	1
7"	2" Code 62 Flange	2" ISO6162 Flange
9"	2" Code 62 Flange	2" ISO6162 Flange

Seal Compound (See Catalog for Temperature Settings)	
K	Buna Nitrile (Std)
E	Fluoroelastomer
D	EPR
H	Hydrogenated Nitrile
Q	Low Temp.
S	Special (to be specified)

Bladder Accumulators

GREER
BLADDER PRODUCTS

IN THIS SECTION

Overview 51
Specifications 52
Models, Capacities & Dimensions
Bottom Repairable 54
Top Repairable 55
High-flow 56
Transfer Barrier 57
Gas Bottles 58
Options & Accessories 59
Replacement Kits 63
Ordering Information 64

Features

- Operating Pressures to 6600 PSI
- Ten Different Capacities from 10 cu in to 15 gallons
- Eight Different Configurations
- Highest Quality In-House Manufactured Bladders
- ASME Certification Standard, 1 Gallon & Up
- Water/Chemical Service Available, with Stainless Steel Ports
- Five Bladder Compounds to Suit a Variety of Fluids & Temperatures
- Certifications Available: CE, CRN, AS1210, SELO, ABS, DNV, GOST
- Temperatures -40° to 250° F

Bladder accumulators are suitable for storing energy under pressure, absorbing hydraulic shocks, and dampening pump pulsation and flow fluctuations. Bladder accumulators provide excellent gas and fluid separation ensuring dependable performance, maximum efficiency, and long service life.

Why Use Bladder Accumulators?

- improves system efficiency
- supplements pump flow
- supplies power in emergency
- compensates for leakage
- absorbs hydraulic shocks
- highly contaminant tolerant
- universal application
- high/low temperature tolerance
- safety, cannot be disassembled under pressure
- very quick response
- works well with water, low lubricity fluids
- wide range of compounds for a variety of fluids

GREER Bladder Products… The Original and still the Best!

The Greer bladder style accumulator is the industry's original, and still the best! For years this style of accumulator has served both the industrial and mobile hydraulic markets, providing a proven design for many hydraulic system applications.

The Greer bladder product line offers the broadest line of quality products, including:

- 3000 & 5000 PSI Bottom Repairable
- 3000 & 5000 PSI Top Repairable
- 3000 PSI High-flow
- 3000 PSI Transfer Barrier
- 3000 & 5000 PSI Gas Bottles
- A Wide Array of Options and Accessories

Greer bladder products maintain the highest quality because of our **in-house** bladder molding operations. The heart of the bladder accumulator is the actual bladder, and all Greer bladders are engineered and manufactured in our own facility and subjected to our own high quality inspection standards.

Specifications

Materials

- Shell – high strength alloy steel (SA372, all sizes comply with ASME material specifications, 1 gal. & larger supplied with ASME Certification as standard)
- Ports – all oil service ports, high strength alloy steel
  – water & chemical service:
  3000 PSI, 304 stainless steel
  5000 PSI, 17-4 PH stainless steel
- Poppet & Spring – 304 stainless steel
- Gas Valve Cartridge – steel
- Gas Valve Protector – steel
- Gas Valve Stem – steel
- Bladders – various elastomers, see Standard and Optional Bladders in this section.

Maximum Flow Rates

Size (gallon)	Max. Recommended Flow for Standard Mineral Oils	
	GPM	LPM
10 cu in	23	87
1 pt & 1 qt	40	151
150 cu in	60	227
1	150	568
21/2 thru 15	220	833
21/2 thru 15, High-flow	600	2271

Pressure Ratings – 3000 and 5000 PSI bladder accumulators are rated at minimum 4 to 1 design factors as standard. 4000 and 6600 PSI (ASME Appendix 22) bladder accumulators are available as an option at minimum 3 to 1 design factors. For pressures over 6600 PSI, consult the factory.

Max. Recommended Compression Ratio (max. working pressure/precharge pressure): 4 to 1.

Certifications – ASME Certification (Section VIII-Div. 1) is available as standard on bladder accumulators (1 gallon & up) and ASME Appendix 22 Certification as an option. See page 6 for a complete certification summary.

Size	Std. ASME Cert.			ASME Appendix 22	
	Status	Rating	D.F.*	Rating	D.F.*
10 thru 150 in^3 3000 PSI	Option	3000 PSI	4 to 1	Consult Factory	
1 thru 15 gal. 3000 PSI	Std.	3000 PSI	4 to 1	4000 PSI	3 to 1
1 thru 15 gal. 5000 PSI	Std.	5000 PSI	4 to 1	6600 PSI	3 to 1

**Design Factor.*

Fluids – Greer bladder accumulators are compatible with a wide variety of fluids. The standard accumulator may be used with petroleum-based industrial or water-based flame resistant fluids. Bladders compatible with most industrial fluids can be furnished on special orders with temperature ranges from -40°F to 250°F (-40°C to 121°C).

Precharge – Units are shipped with a nominal nitrogen precharge as standard. For specific precharge pressures, specify at the time of order.

Available Options – a wide variety of options are available on Greer bladder accumulators including:

- Bladder Compounds (see Standard and Optional Bladders in this section).
- Ports (see Options in this section)
- Water & Chemical Service (see Options in this section)
- Gas Valves (see Options in this section)
- Fuse Plugs Assemblies (see Options in this section)
- Fixed Gauge Adapters (see Accumulator Accessories)

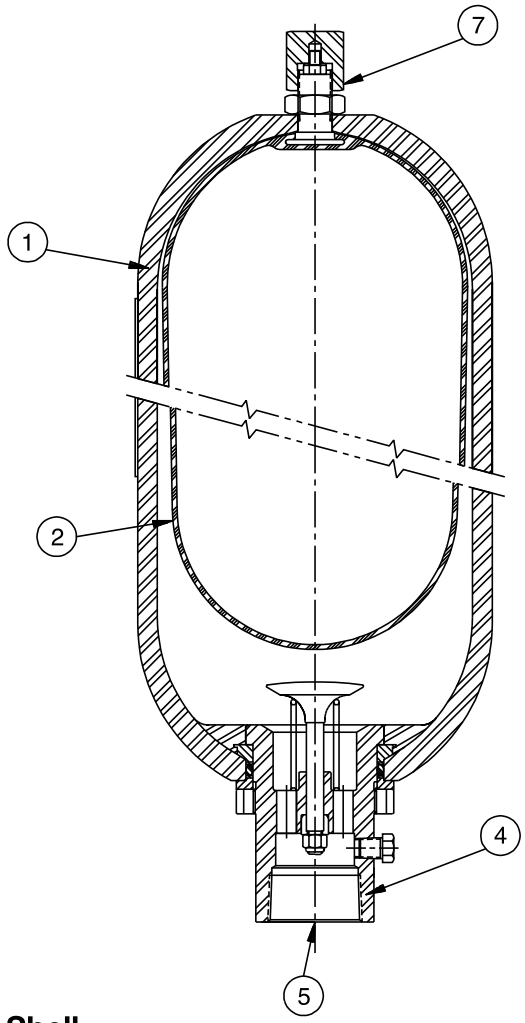

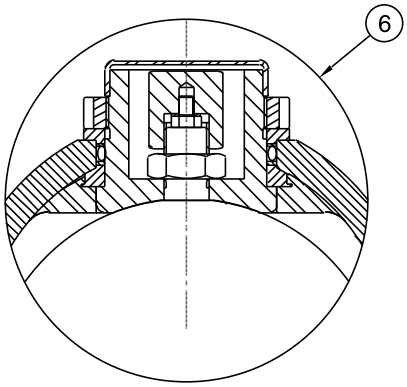

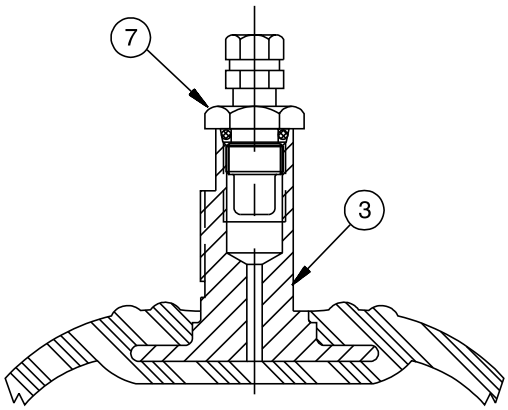

1 Shell

Bladder accumulator shells are made from chrome-molybdenum alloy steel (SA372) with forged ends. All sizes comply with ASME material and design specifications. One gallon and larger supplied with ASME Certification as standard.

2 Bladder

Greer bladders, the heart and soul of a bladder accumulator, are manufactured in-house to control the material blending, molding, critical seam assembly, and curing processes. It is widely accepted that Greer bladders are the highest quality bladders in the industry. Bladders are offered in five different standard compounds to suit a wide variety of fluids and operating temperatures. Special compounds are available for unusual or severe applications.

3 Bladder Stems

All bladder accumulators, sizes 1 gallon and larger, are fitted as standard with two-piece bladder stems with replaceable gas valve cartridge for ease of serviceability. Also, the two-piece stem will accept high-flow poppet type gas valves and permanent mount gauge adapters.

4 Port Assemblies

Standard oil service ports are made from high-strength alloy steel for maximum durability. Chemical and water service port assemblies are made from stainless steel for maximum corrosion resistance.

5 Fluid Ports

SAE straight thread, NPTF, SAE Code 61 and SAE Code 62 4-bolt split flange, and High-flow ports are available (See page 60 for details). Bleed ports are included as standard on sizes 1 gallon and larger; not available on flange ports.

6 Top Repairable

The top repairable design permits easy checking and maintenance of the bladder without removing the accumulator from the system, saving time and money.

7 Gas Valve

All accumulators are fitted with a gas valve for ease of gas precharging. One-gallon and larger 3000 PSI units are equipped with a cored gas valve cartridge (ISO-4570-8V1) for ease of maintenance. 5000 PSI units are equipped with a high-pressure cored gas valve cartridge (ISO-4570-8V1) with an option of a high-flow poppet gas valve cartridge (L07689000K). For safety, the gas valve vents if unscrewed.

The simplicity and cost effectiveness of the bottom repairable design has made it the "Industry Standard" bladder accumulator. Sizes range from 10 cu in to 15 gallons.

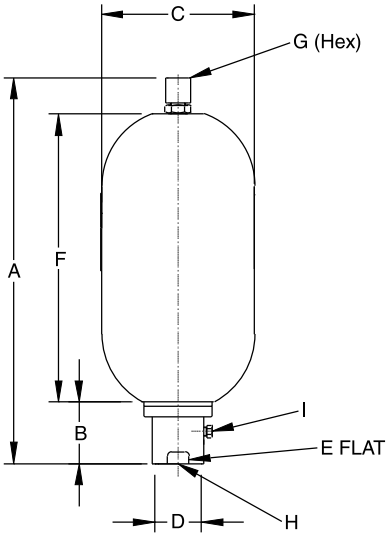

3000 PSI (207 Bar)[1]

Models	Nominal Size Gallon (Liters)	Gas Volume cu in (Liters)	Dimensions, inch (mm)							Hydraulic Ports		Weight lbs. (Kg.)
Oil Service Water Service			A	B	C	D	E	F	G	H (Thread)	I (Thread)	
BAC10B3T01A1 BAC10B3T01WA1	10 cu in (0.16)	12 (0.21)	11.18 (284)	1.89 (48)	2.00 (51)	1.03 (26)	0.94 (24)	7.75 (197)	0.94 (24)	SAE#8 (3/4 - 16)	N/A	3.5 (1.6)
BA001B3T01A1 BA001B3T01WA1	1 Pt. (0.47)	31 (0.51)	10.75 (273)	2.00 (51)	3.40 (86)	1.39 (35)	1.31 (33)	6.87 (174)	0.94 (24)	SAE #12 (1-1/16 -12)	N/A	8 (3.6)
BA002B3T01A1 BA002B3T01WA1	1 Qt. (0.95)	66 (1.08)	11.12 (282)	2.00 (51)	4.50 (114)	1.62 (41)	1.50 (38)	7.63 (194)	0.94 (24)	SAE #12 (1-1/16 -12)	N/A	10 (4.5)
BA005B3T01A1 BA005B3T01WA1	150 cu in (2.5)	156 (2.56)	19.56 (497)	2.08 (53)	4.50 (114)	1.62 (41)	1.50 (38)	15.50 (394)	0.94 (24)	SAE #16 (1-5/16 -12)	N/A	20 (9.1)
BA01B3T01A1 BA01B3T01WA1	1 (3.79)	231 (3.79)	17.00 (432)	3.50 (89)	6.75 (171)	2.37 (60)	2.13 (54)	11.36 (289)	1.25 (32)	SAE #20 (1-5/8 - 12)	SAE #6 (9/16 - 18)	34 (15)
BA02B3T01A1 BA02B3T01WA1	2.5 (9.46)	556 (9.11)	21.38 (543)	3.62 (92)	9.06 (230)	3.00 (76)	2.88 (73)	15.50 (394)	1.25 (32)	SAE #24 (1-7/8 - 12)	SAE #6 (9/16 - 18)	80 (36)
BA05B3T01A1 BA05B3T01WA1	5 (18.9)	1124 (18.42)	33.38 (848)	3.62 (92)	9.06 (230)	3.00 (76)	2.88 (73)	27.50 (700)	1.25 (32)	SAE #24 (1-7/8 - 12)	SAE #6 (9/16 - 18)	120 (55)
BA10B3T01A1 BA10B3T01WA1	10 (37.9)	2097 (34.36)	54.38 (1382)	3.62 (92)	9.06 (230)	3.00 (76)	2.88 (73)	48.50 (1231)	1.25 (32)	SAE #24 (1-7/8 - 12)	SAE #6 (9/16 - 18)	220 (100)
BA11B3T01A1 BA11B3T01WA1	11 (41.6)	2400 (39.33)	59.88 (1520)	3.62 (92)	9.06 (230)	3.00 (76)	2.88 (73)	54.00 (1371)	1.25 (32)	SAE #24 (1-7/8 - 12)	SAE #6 (9/16 - 18)	240 (109)
BA15B3T01A1 BA15B3T01WA1	15 (56.8)	3267 (53.54)	77.88 (1978)	3.62 (92)	9.06 (230)	3.00 (76)	2.88 (73)	72.00 (1830)	1.25 (32)	SAE #24 (1-7/8 - 12)	SAE #6 (9/16 - 18)	305 (139)

1) Note: *1 thru 15 gallon sizes available with 4000 PSI (275 Bar) Appendix 22 Approval.*

5000 PSI (345 Bar)[2]

Models	Nominal Size Gallon (Liters)	Gas Volume cu in (Liters)	Dimensions, inch (mm)							Hydraulic Ports		Weight lbs. (Kg.)
Oil Service Water Service			A	B	C	D	E	F	G	H (Thread)	I (Thread)	
BA01B5T01A1 BA01B5T01WA1	1 (3.79)	231 (3.79)	17.25 (438)	3.25 (83)	7.14 (181)	2.25 (57)	N/A	11.44 (291)	1.44 (37)	SAE #20 (1-5/8 - 12)	SAE #6 (9/16 - 18)	50 (23)
BA02B5T01A1 BA02B5T01WA1	2.5 (9.46)	556 (9.11)	22.55 (573)	3.88 (99)	9.63 (245)	3.00 (76)	2.88 (73)	16.12 (409)	2.50 (64)	SAE #24 (1-7/8 - 12)	SAE #6 (9/16 - 18)	120 (55)
BA05B5T01A1 BA05B5T01WA1	5 (18.9)	1124 (18.42)	34.80 (884)	3.88 (99)	9.63 (245)	3.00 (76)	2.88 (73)	28.36 (720)	2.50 (64)	SAE #24 (1-7/8 - 12)	SAE #6 (9/16 - 18)	200 (91)
BA10B5T01A1 BA10B5T01WA1	10 (37.9)	2097 (34.36)	55.30 (1405)	3.88 (99)	9.63 (245)	3.00 (76)	2.88 (73)	48.88 (1242)	2.50 (64)	SAE #24 (1-7/8 - 12)	SAE #6 (9/16 - 18)	335 (152)
BA15B5T01A1 BA15B5T01WA1	15 (56.8)	3267 (53.54)	76.80 (1951)	3.88 (99)	9.63 (245)	3.00 (76)	2.88 (73)	70.38 (1788)	2.50 (64)	SAE #24 (1-7/8 - 12)	SAE #6 (9/16 - 18)	485 (220)

2) Note: *Available with 6600 PSI (455 Bar) Appendix 22 Approval.*

The Top Repairable Accumulator permits easy checking and maintenance of the bladder without removing the accumulator from the service line, saving time and money. Sizes range from 2-1/2 to 15 gallons.

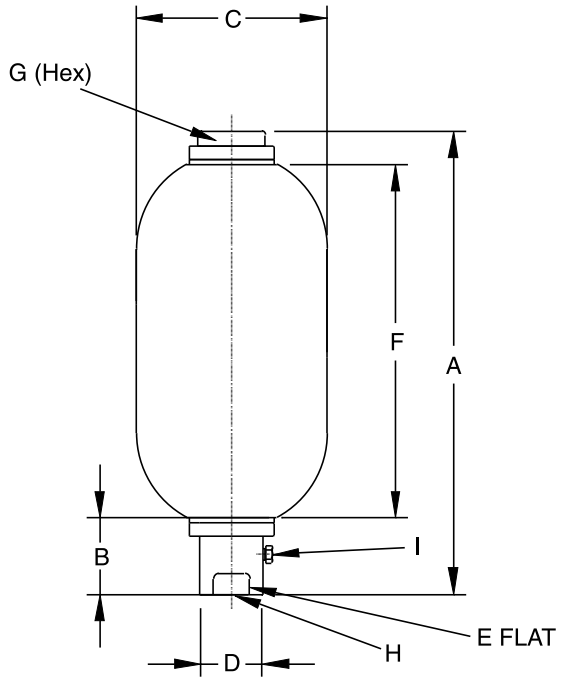

3000 PSI (207 Bar)[1]

Models	Nominal Size Gallon (Liters)	Gas Volume cu in (Liters)	Dimensions, inch (mm)							Hydraulic Ports		Weight lbs. (Kg.)
Oil Service Water Service			A	B	C	D	E	F	G	H (Thread)	I (Thread)	
BA02T3T01A1 BA02T3T01WA1	2.5 (9.45)	541 (8.87)	20.50 (521)	3.62 (92)	9.06 (230)	3.00 (76)	2.88 (73)	15.38 (391)	1.25 (32)	SAE #24 (1-7/8 - 12)	SAE #6 (9/16 - 18)	80 (36)
BA05T3T01A1 BA05T3T01WA1	5 (18.9)	1110 (18.19)	32.75 (832)	3.62 (92)	9.06 (230)	3.00 (76)	2.88 (73)	27.63 (702)	1.25 (32)	SAE #24 (1-7/8 - 12)	SAE #6 (9/16 - 18)	120 (55)
BA10T3T01A1 BA10T3T01WA1	10 (37.8)	2083 (34.13)	53.25 (1353)	3.62 (92)	9.06 (230)	3.00 (76)	2.88 (73)	48.13 (1223)	1.25 (32)	SAE #24 (1-7/8 - 12)	SAE #6 (9/16 - 18)	220 100
BA11T3T01A1 BA11T3T01WA1	11 (41.6)	2386 (39.1)	59.00 (1499)	3.62 (92)	9.06 (230)	3.00 (76)	2.88 (73)	53.88 (1369)	1.25 (32)	SAE #24 (1-7/8 - 12)	SAE #6 (9/16 - 18)	240 (109)
BA15T3T01A1 BA15T3T01WA1	15 (56.7)	3253 (53.31)	77.38 (1965)	3.62 (92)	9.06 (230)	3.00 (76)	2.88 (73)	71.75 (1822)	1.25 (32)	SAE #24 (1-7/8 - 12)	SAE #6 (9/16 - 18)	305 (139)

1) Note: *Available with 4000 PSI (275 Bar) Appendix 22*

5000 PSI (345 Bar)[2]

Models	Nominal Size Gallon (Liters)	Gas Volume cu in (Liters)	Dimensions, inch (mm)							Hydraulic Ports		Weight lbs. (Kg.)
Oil Service Water Service			A	B	C	D	E	F	G	H (Thread)	I (Thread)	
BA02T5T01A1 BA02T5T01WA1	2.5 (9.46)	541 (8.87)	21.68 (551)	3.88 (99)	9.63 (245)	3.00 (76)	2.88 (73)	15.88 (403)	1.25 (32)	SAE #24 (1-7/8 - 12)	SAE #6 (9/16 - 18)	120 (55)
BA05T5T01A1 BA05T5T01WA1	5 (18.9)	1110 (18.19)	33.92 (862)	3.88 (99)	9.63 (245)	3.00 (76)	2.88 (73)	23.13 (715)	1.25 (32)	SAE #24 (1-7/8 - 12)	SAE #6 (9/16 - 18)	220 (100)
BA10T5T01A1 BA10T5T01WA1	10 (37.8)	2083 (34.13)	54.42 (1382)	3.88 (99)	9.63 (245)	3.00 (76)	2.88 (73)	48.63 (1235)	1.25 (32)	SAE #24 (1-7/8 - 12)	SAE #6 (9/16 - 18)	335 (152)
BA15T5T01A1 BA15T5T01WA1	15 (56.8)	3253 (53.31)	75.92 (1928)	3.88 (99)	9.63 (245)	3.00 (76)	2.88 (73)	70.13 (1781)	1.25 (32)	SAE #24 (1-7/8 - 12)	SAE #6 (9/16 - 18)	485 (220)

2) Note: *Available with 6600 PSI (455 Bar) Appendix 22*

For systems requiring a fast "dumping" rate, the High-flow accumulator incorporates a large port assembly capable of flows up to 600 GPM (2270 LPM). Sizes range from 2-1/2 to 15 gallons.

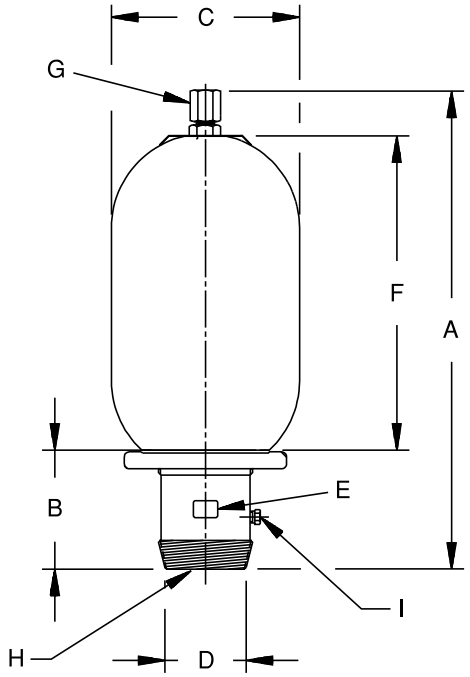

3000 PSI (207 Bar)

Models	Nominal Size Gallon (Liters)	Gas Volume cu in (Liters)	Dimensions, inch (mm)							H Hydraulic Port	Port	Weight
Male Str. Thd Male NPT			A	B	C	D	E	F	G		I (Thread)	lbs. (Kg.)
BA02B3A01A1 BA02B3H01A1	2.5 (9.46)	556 (9.11)	22.88 (581)	5.62 (143)	9.06 (230)	4.00 (102)	3.85 (98)	15.25 (387)	1.25 (32)	4-1/4"-8 Str. Thd. 4 NPTF	SAE #6 (9/16-18)	90 (41)
BA05B3A01A1 BA05B3H01A1	5 (18.9)	1124 (18.42)	35.12 (892)	5.62 (143)	9.06 (230)	4.00 (102)	3.85 (98)	27.50 (699)	1.25 (32)	4-1/4"-8 Str. Thd. 4 NPTF	SAE #6 (9/16-18)	130 (59)
BA10B3A01A1 BA10B3H01A1	10 (37.9)	2097 (34.36)	55.62 (1413)	5.62 (143)	9.06 (230)	4.00 (102)	3.85 (98)	48.00 (1219)	1.25 (32)	4-1/4"-8 Str. Thd. 4 NPTF	SAE #6 (9/16-18)	230 (105)
BA11B3A01A1 BA11B3H01A1	11 (41.6)	2400 (39.33)	61.38 (1559)	5.62 (143)	9.06 (230)	4.00 (102)	3.85 (98)	53.75 (1365)	1.25 (32)	4-1/4"-8 Str. Thd. 4 NPTF	SAE #6 (9/16-18)	250 (114)
BA15B3A01A1 BA15B3H01A1	15 (56.8)	3267 (53.54)	79.62 (2022)	5.62 (143)	9.06 (230)	4.00 (102)	3.85 (98)	69.50 (1765)	1.25 (32)	4-1/4"-8 Str. Thd. 4 NPTF	SAE #6 (9/16-18)	315 (143)

NOTE: *High-flow bladder accumulators not available with Appendix 22 option.*

Optional Flange Port

For Model "A"
Hydraulic Port only

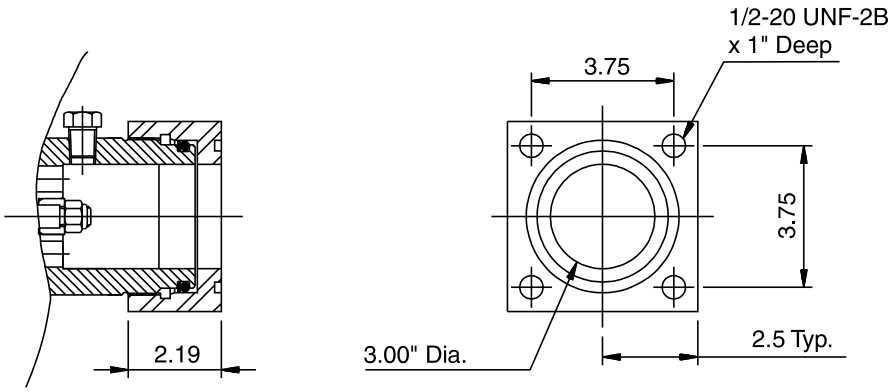

Note: *Accumulator assembly does not include flange (part number 1467990000).*

The Transfer Barrier accumulator provides positive separation between two different medias or can be used with gas bottles. Sizes range from 2-1/2 to 15 gallons.

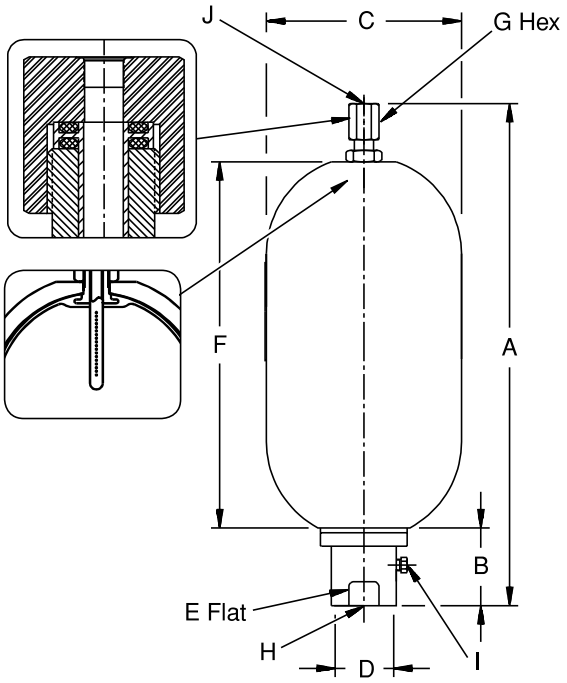

3000 PSI (207 Bar)[1]

Models	Nominal Size Gallon (Liters)	Gas Volume cu in (Liters)	Dimensions, inch (mm)							Hydraulic Ports			Weight lbs. (Kg.)
Oil Service Water Service			A	B	C	D	E	F	G	H (Thread)	I (Thread)	J (Thread)	
BT02B3TT01A1 BT02B3TT01WA1	2.5 (9.45)	556 (9.11)	21.25 (540)	3.62 (92)	9.06 (230)	3.00 (76)	2.88 (73)	15.62 (397)	2.00 (51)	SAE #24 (1-7/8 - 12)	SAE #6 (9/16 - 18)	SAE #12 (1-1/16 -12)	80 (36)
BT05B3TT01A1 BT05B3TT01WA1	5 (18.9)	1124 (18.42)	33.50 (851)	3.62 (92)	9.06 (230)	3.00 (76)	2.88 (73)	27.88 (708)	2.00 (51)	SAE #24 (1-7/8 - 12)	SAE #6 (9/16 - 18)	SAE #12 (1-1/16 -12)	120 (55)
BT10B3TT01A1 BT10B3TT01WA1	10 (37.8)	2097 (34.36)	54.00 (1372)	3.62 (92)	9.06 (230)	3.00 (76)	2.88 (73)	48.50 (1231)	2.00 (51)	SAE #24 (1-7/8 - 12)	SAE #6 (9/16 - 18)	SAE #12 (1-1/16 -12)	220 (100)
BT11B3TT01A1 BT11B3TT01WA1	11 (41.6)	2400 (39.33)	59.75 (1518)	3.62 (92)	9.06 (230)	3.00 (76)	2.88 (73)	54.12 (1375)	2.00 (51)	SAE #24 (1-7/8 - 12)	SAE #6 (9/16 - 18)	SAE #12 (1-1/16 -12)	240 (109)
BT15B3TT01A1 BT15B3TT01WA1	15 (56.7)	3267 (53.54)	77.62 (1972)	3.62 (92)	9.06 (230)	3.00 (76)	2.88 (73)	72.00 (1829)	2.00 (51)	SAE #24 (1-7/8 - 12)	SAE #6 (9/16 - 18)	SAE #12 (1-1/16 -12)	305 (139)

1) Note: *Available with 4000 PSI (275 Bar) Appendix 22*

5000 PSI (345 Bar)[2]

Models	Nominal Size Gallon (Liters)	Gas Volume cu in (Liters)	Dimensions, inch (mm)							Hydraulic Ports			Weight lbs. (Kg.)
Oil Service Water Service			A	B	C	D	E	F	G	H (Thread)	I (Thread)	J (Thread)	
BT02B5TT01A1 BT02B5TT01WA1	2.5 (9.45)	556 (9.11)	22.55 (573)	3.62 (92)	9.63 (245)	3.00 (76)	2.88 (73)	16.12 (409)	2.00 (51)	SAE #24 (1-7/8 - 12)	SAE #6 (9/16 - 18)	SAE #12 (1-1/16 -12)	120 (55)
BT05B5TT01A1 BT05B5TT01WA1	5 (18.9)	1124 (18.42)	34.80 (884)	3.62 (92)	9.63 (245)	3.00 (76)	2.88 (73)	28.36 (720)	2.00 (51)	SAE #24 (1-7/8 - 12)	SAE #6 (9/16 - 18)	SAE #12 (1-1/16 -12)	200 (91)
BT10B5TT01A1 BT10B5TT01WA1	10 (37.8)	2097 (34.36)	55.30 (1405)	3.62 (92)	9.63 (245)	3.00 (76)	2.88 (73)	48.88 (1242)	2.00 (51)	SAE #24 (1-7/8 - 12)	SAE #6 (9/16 - 18)	SAE #12 (1-1/16 -12)	335 (152)
BT15B5TT01A1 BT15B5TT01WA1	15 (56.7)	3267 (53.54)	76.80 (1951)	3.62 (92)	9.63 (245)	3.00 (76)	2.88 (73)	70.38 (1788)	2.00 (51)	SAE #24 (1-7/8 - 12)	SAE #6 (9/16 - 18)	SAE #12 (1-1/16 -12)	485 (220)

2) Note: *Available with 6600 PSI (455 Bar) Appendix 22*

Where space does not permit the installation of the required accumulator, a smaller accumulator may be used by connecting it to an auxiliary gas bottle(s) that may be located in some nearby spot where space is available. (See Large Gas Bottles for additional offerings and page 84 for sizing information.) Sizes range from 1 to 15 gallons.

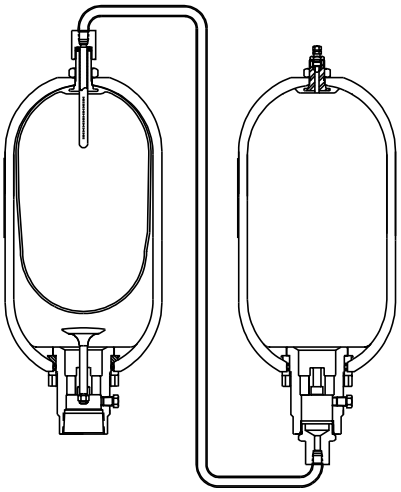

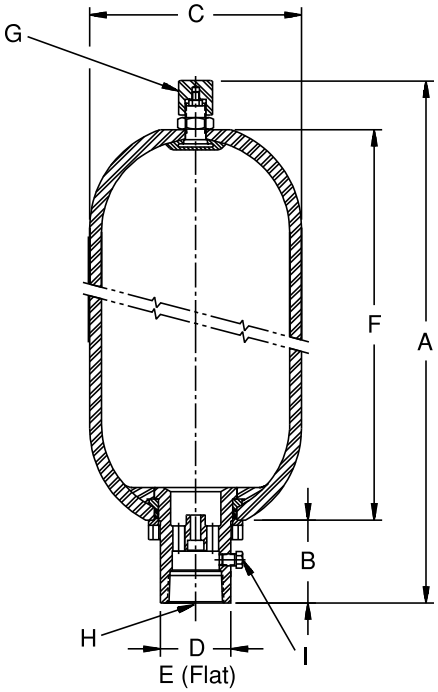

3000 PSI (207 Bar)[1]

Models	Nominal Size Gallon (Liters)	Dimensions, inch (mm)							Ports		Weight lbs. (Kg.)
		A	B	C	D	E	F	G	H (Thread)	I (Thread)	
BG01B3T01A1	1 (3.79)	17.00 (432)	3.50 (89)	6.75 (171)	2.37 (60)	2.13 (54)	11.36 (289)	1.25 (32)	SAE #20 (1-5/8 - 12)	SAE #6 (9/16 - 18)	34 (15)
BG02B3T01A1	2.5 (9.46)	21.25 (540)	3.62 (92)	9.06 (230)	3.00 (76)	2.88 (73)	15.62 (397)	1.25 (32)	SAE #24 (1-7/8 - 12)	SAE #6 (9/16 - 18)	80 (36)
BG05B3T01A1	5 (18.9)	33.50 (851)	3.62 (92)	9.06 (230)	3.00 (76)	2.88 (73)	27.88 (708)	1.25 (32)	SAE #24 (1-7/8 - 12)	SAE #6 (9/16 - 18)	120 (55)
BG10B3T01A1	10 (37.9)	54.00 (1372)	3.62 (92)	9.06 (230)	3.00 (76)	2.88 (73)	43.38 (1102)	1.25 (32)	SAE #24 (1-7/8 - 12)	SAE #6 (9/16 - 18)	220 (100)
BG11B3T01A1	11 (41.6)	59.75 (1518)	3.62 (92)	9.06 (230)	3.00 (76)	2.88 (73)	54.12 (1375)	1.25 (32)	SAE #24 (1-7/8 - 12)	SAE #6 (9/16 - 18)	240 (109)
BG15B3T01A1	15 (56.8)	77.62 (1972)	3.62 (92)	9.06 (230)	3.00 (76)	2.88 (73)	72.00 (1829)	1.25 (32)	SAE #24 (1-7/8 - 12)	SAE #6 (9/16 - 18)	305 (139)

1) Note: *Available with 4000 PSI (275 Bar) Appendix 22*

5000 PSI (345 Bar)[2]

Models	Nominal Size Gallon (Liters)	Dimensions, inch (mm)							Ports		Weight lbs. (Kg.)
		A	B	C	D	E	F	G	H (Thread)	I (Thread)	
BG01B5T1A1	1 (3.79)	17.25 (438)	3.25 (83)	7.14 (181)	2.25 (57)	N/A	11.44 (291)	1.44 (37)	SAE #20 (1-5/8 - 12)	SAE #6 (9/16 - 18)	50 (23)
BG02B5T1A1	2.5 (9.46)	22.55 (573)	3.88 (99)	9.63 (245)	3.00 (76)	2.88 (73)	16.12 (409)	2.50 (64)	SAE #24 (1-7/8 - 12)	SAE #6 (9/16 - 18)	120 (55)
BG05B5T1A1	5 (18.9)	34.80 (884)	3.88 (99)	9.63 (245)	3.00 (76)	2.88 (73)	28.36 (720)	2.50 (64)	SAE #24 (1-7/8 - 12)	SAE #6 (9/16 - 18)	200 (91)
BG10B5T1A1	10 (37.9)	55.30 (1405)	3.88 (99)	9.63 (245)	3.00 (76)	2.88 (73)	48.88 (1242)	2.50 (64)	SAE #24 (1-7/8 - 12)	SAE #6 (9/16 - 18)	335 (152)
BG15B5T1A1	15 (56.8)	76.80 (1951)	3.88 (99)	9.63 (245)	3.00 (76)	2.88 (73)	70.38 (1788)	2.50 (64)	SAE #24 (1-7/8 - 12)	SAE #6 (9/16 - 18)	485 (220)

2) Note: *Available with 6600 PSI (455 Bar) Appendix 22*

PHASE OUT
PHASE OUT

Standard and Optional Bladders

A variety of bladders are offered to suit a wide range of fluids and operating temperatures. The following table lists the optional bladders available, their recommended operating temperature ranges, and the types of fluids that are generally compatible.

Seal Code	Polymer	**Recommended Operating Temperature Range	Maximum Temperature with Reduced Life	General Application & Compatibility*
01	Buna-Nitrile	-20°F to 200°F -29°C to 93°C	225°F 107°C	Standard Compound – Compatible with most mineral oil-based fluids
04	Hydrin (Lo-Temp.)	-40°F to 225°F -40°C to 107°C	250°F 121°C	Compatible with most mineral oil-based fluids with enhanced low temperature performance
06	Butyl	-40°F to 200°F -40°C to 93°C	300°F 149°C	Compatible with most phosphate ester fluids and some synthetic fluids
08	Ethylene Propylene	-40°F to 200°F -40°C to 93°C	300°F 149°C	Compatible with some synthetic fluids and water
28	Fluorocarbon Elastomer	-10°F to 250°F -23°C to 121°C	400°F 204°C	Compatible with most mineral oil-based fluids at higher temperatures and some exotic fluids

** Consult your local distributor or the factory for fluid compatibility information.*
*** Temperature ranges may vary depending upon the fluid used in the hydraulic system.*

Water & Chemical Service Options (W)

Bladder accumulators are available with a water and chemical resistance option. The (W) designation includes an internally Skotchkoted shell and stainless steel or electroless nickel plated port assembly. The Skotchkote offers added protection against more corrosive fluids.

Gas Valves

Two types of gas valves are available on bladder accumulators. 3000 PSI rated models are offered with a cored gas valve cartridge (cartridge type, 1 gal. & up, ISO-4570-8V1) as standard. 5000 PSI units are equipped with a high-pressure cored gas valve cartridge (ISO-4570-8V1) with an option of a heavy-duty poppet type gas valve cartridge (L07689000K).

A high-flow poppet style gas valve is available upon request, but must be approved by a Parker accumulator engineer. Please contact the division for assistance.

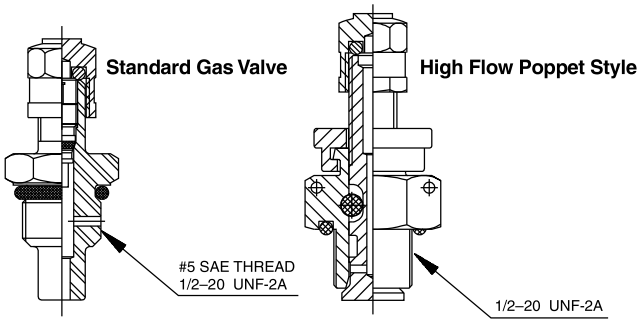

L07421000*
(3000 PSI)
L07688000*
(4000 PSI)

L07440000K

Standard and Optional Fluid Ports

The following standard and optional fluid ports are offered on all Bottom Repairable, Top Repairable, and Transfer Barrier accumulators (for high-flow ports, see High-flow). See How to Order at the end of this section for complete ordering instructions.

Sizes	Standard Port	Optional Ports				
	SAE Str. Thread Code T	SAE 4-Bolt Split Flange* Code F	NPTF Code U	Undersize NPTF Code X	BSPP Code R	ISO 6149-1 Code Y
3000 PSI (207 Bar) Models						
10 cu in	SAE #8	–	3/4" Male	–	–	M 8x1.5
1 pt., 1 qt.	SAE #12	–	3/4"	–	G 3/4"	M 27x2
150 cu in	SAE #16	–	1"	–	G 1"	M 33x2
1 gal.	SAE #20	1-1/4", Code 61	1-1/4"	–	G 1-1/4"	M 42x2
2½ to 15 gal.	SAE #24	2", Code 61	2"	1-1/4"	G 2"	M 48x2
5000 PSI (345 Bar) Models						
1 gal.	SAE #20	1-1/4", Code 62	1-1/4"	–	G 1-1/4"	M 42x2
2½ to 15 gal.	SAE #24	1-1/2", Code 62	2"	–	G 2"	M 48x2

SAE 4-Bolt Flange Port Dimensions

Standard Pressure – Code 61 (ISO 6162) – 3000 PSI (207 Bar)

Flange Size	SAE Flange Dimensions (in.)					ISO 6162 Flange Dimensions (mm)				
	A	B	C	F	G	A	B	C	F	G
1-1/4”	7/16 - 4	1.188	2.312	1-1/2	1.000	M10	30.2	58.7	32	25.4
2”	1/2 - 13	1.688	3.062	2	1.062	M12	42.9	77.8	51	26.9

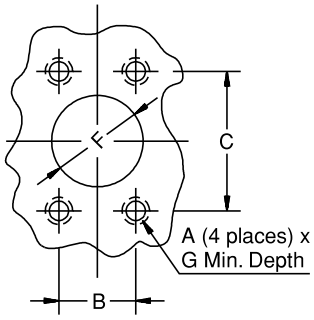

High Pressure – Code 62 (ISO 6162) – 6000 PSI (410 Bar)

Flange Size	SAE Flange Dimensions (in.)					ISO 6162 Flange Dimensions (mm)				
	A	B	C	F	G	A	B	C	F	G
1-1/4”	1/2 - 13	1.250	2.625	1-1/4	1.000	M16	31.8	66.7	32	25.4
1-1/2”	5/8 - 11	1.438	3.125	1-1/2	1.375	M16	36.5	79.4	38	34.9

Note: *The dimensions shown on this chart are for the mating manifold. The flange halves are not supplied with the accumulator.*

Flange end for SAE J518 Code 61/62
NOTE: 4-bolt split flange halves (not included).

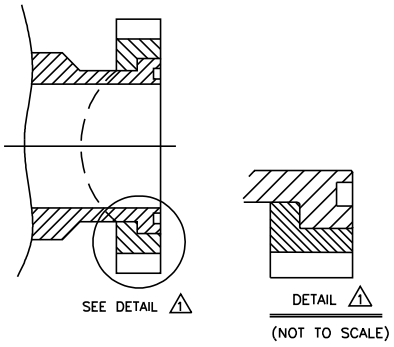

Safety Fuse Options

Safety Fuses are used as a safety device on accumulators and gas bottles to prevent over-pressurization of gas due to external heat or hydraulic pressure (set at 140% of maximum system pressure to avoid rupture disk fatigue and premature failure). The rupture disks are calibrated to rupture at a pre-determined pressure. Safety fuses are available on most sizes of piston and bladder accumulators and gas bottles. Safety fuses can be installed on 1 gallon & larger accumulators by using the "Fuse Adapter" as shown to the right. The safety fuse assembly and/or fuse adapter must be ordered separately.

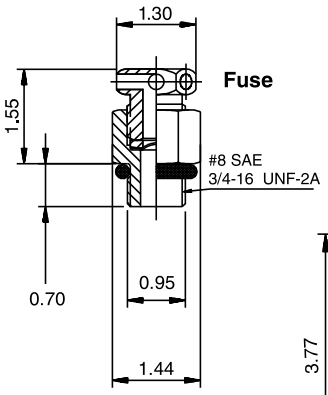

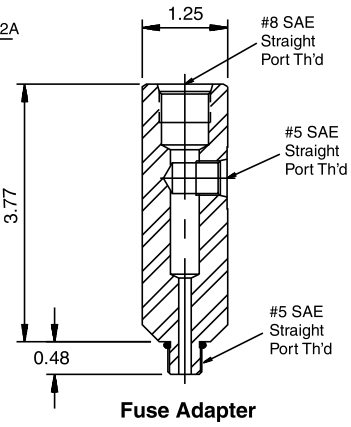

Description	Part Number
Safety Fuse Assembly[1]	086471xxxx
Replacement Rupture Disks	756003xxxx
Fuse Adapter	1468970002

[1] Assembly includes housing and rupture disk, xxxx = pressure setting in 100 PSI increments, i.e., for an assembly with a 2000 PSI setting, order P/N 0864712000.
***Note:** ASME and CRN units available upon request.*

Mounting, Charging & Gauging Accessories

See Accessories page 97.

Special Options

If your application requires a bladder accumulator or special option that falls outside of our broad offering, consult your local distributor, Greer representative, or the factory with your specific requirements. We have the manufacturing and engineering expertise to design and build bladder accumulators to your exacting requirements, from simple modifications to standard units to complete designs from scratch. Some example of our past special designs include:

- Special and Stainless Steel Materials
- Special Bladder Compounds
- Suction Stabilizer
- Pulsation Dampener
- Special Certifications

Consult our experts with your next bladder accumulator requirement!

There have been many attempts to solve the problems caused by high transient flow conditions inherent with pulsations and shocks. All attempts have had one thing in common: they never quite solved the problem. Then came Greer's Pulse-Tone concept, a patented breakthrough in pulsation control. The trouble with the previous devices was that most of the pulsations and shocks never got near the shock absorber. Pulse-Tone puts a flow diversion baffle into the line. Fluid traveling through the hydraulic line bends around the baffle, but pulsation and shock energy waves take the path of least resistance right into the nitrogen precharged bladder. The bladder absorbs up to 98% of the waves' potentially destructive force.

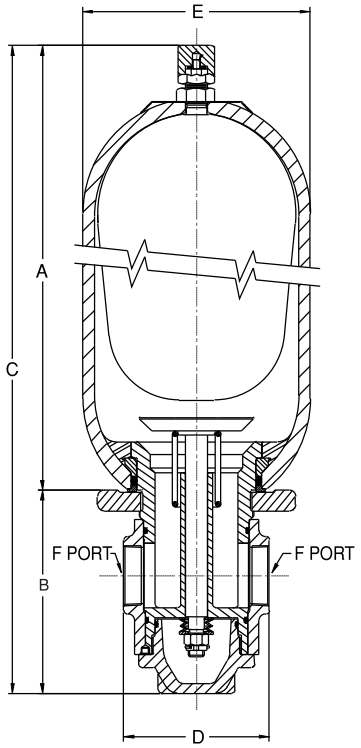

Why Use Pulse-Tones?

- improves system efficiency
- absorbs hydraulic shocks
- very contamination tolerant
- very quick response
- works well with water, low lubricity fluids

Specifications

Maximum Operating Pressure - 3000 PSI (207 Bar)

Materials

- Shell – high strength alloy steel (SA372, 1 gallon & up comply with all ASME material specifications as std.)
- Ports – all oil service ports, high strength alloy steel – water and chemical service, 3000 PSI, 304 stainless steel
- Poppet & Spring – 304 stainless steel
- Gas Valve Cartridge – steel
- Gas Valve Protector – steel
- Gas Valve Stem – steel
- Bladders – Various polymers, see Standard and Optional Bladders in Bladder Accumulators section.

Maximum Compression Ratio (max. working pressure/ precharge pressure) 4-1

Pulse-Tone Flow Rates

Size (cu in)	Max. Recommended Flow	
	GPM	LPM
1 quart	28.0	106
1 gal.	38.0	145
2.5-15 gal.	190.0	720

Models, Capacities & Dimensions

Size	Bladder Material (Code)	Part No.	Repair Kit Part No.	Capacity cu in (liters)	A	B	C	D	E	F	Weight lbs. (kg.)
					in (mm)					Port (thread)	
1 quart	Nitrile (-1)	834340	703040	60 (0.98)	7.38 (187)	3.03 (77)	12.16 (309)	2.00 (51)	4.50 (114)	1" NPTF	17 (7.7)
1 gal.	Nitrile (-1)	810381	703047	226 (3.70)	11.25 (286)	5.06 (129)	18.56 (471)	4.50 (114)	6.81 (173)	1-1/4" NPTF	46 (21)
2-1/2 gal.	Nitrile (-1)	810829	703054	555 (9.10)	15.50 (394)	8.50 (216)	26.23 (666)	6.75 (171)	9.00 (229)	2" NPTF	125 (57)
5 gal.	Nitrile (-1)	800290	703061	1095 (17.9)	27.94 (710)	8.50 (216)	38.69 (983)	6.75 (171)	9.00 (229)	2" NPTF	155 (70)

A full range of genuine Greer replacement bladder kits are available to bring your accumulator back to original condition should replacement become necessary. All bladder kits include port o-ring, backup seals and gas valves with secondary seals.

NOTE: *Part numbers shaded in gray will be phased out.*

Bladder & Seal Compound						
Size	**Brand**	**Group 01 Nitrile (NBR)**	**Group 04 Hydrin**	**Group 06 Butyl**	**Group 08 EPR**	**Group 28 Fluorocarbon**
3,000 PSI Standard Bladder Kits (Top & Bottom Repairable)						
10 Cu. In.	Greer	702900	702902	702903	702904	702906
	Parker	0850693C10	0856663C10	0850703C10	0851053C10	0851043C10
1 Pt.	Greer	702914	702916	702917	702918	702920
	Parker	0850693001	0856663001	0850703001	0851053001	0851043001
1 Qt.	Greer	702928	702930	702931	702932	702934
	Parker	0850693002	0856663002	0850703002	0851053002	0851043002
150 Cu. In.	Greer	702942	702944	702945	702946	702948
	Parker	0850693006	0856663006	0850703006	0851053006	0851043006
1 Gal.	Greer	702956	702958	702959	702960	702962
	Parker	0850693010	0856663010	0850703010	0851053010	0851043010
2 1/2 Gal.	Greer	702970	702972	702973	702974	702976
	Parker	0850693025	0856663025	0850703025	0851053025	0851043025
5 Gal.	Greer	702984	702986	702987	702988	702990
	Parker	0850693050	0856663050	0850703050	0851053050	0851043050
10 Gal.	Greer	702998	703000	703001	703002	703004
	Parker	0850693100	0856663100	0850703100	0851053100	0851043100
11 Gal.	Greer	703012	703014	703015	703016	703018
	Parker	0850693110	0856663110	0850703110	0851053110	0851043110
15 Gal.	Greer	703026	703028	703029	703030	703032
	Parker	0850693150	0856663150	0850703150	0851053150	0851043150
25 Gal.	Greer	703340	704008	704009	703341	703342
	Parker	0850693250	0856663250	0850703250	0851053250	0851043250
40 Gal.	Greer	703346	704014	704015	703347	703348
	Parker	0850693400	0856663400	0850703400	0851053400	0851043400
5,000 PSI Bottom Repairable Bladder Kits (2" Valve Stem - New Style)						
1 Gal. 7/8" ø Stem	Greer	8706135010	8706175010	8706145010	8706145010	8706155010
	Parker	8706135010	8706175010	8706145010	8706145010	8706155010
1 Gal. 1" ø Stem	Greer	704060	704062	704063	704064	704066
	Parker	0850695010	0856665010	080705010	0851055010	0851045010
2 1/2 Gal.	Greer	706000	706002	706003	706004	706006
	Parker	0861905025	0861945025	0861915025	0861935025	0861925025
5 Gal.	Greer	706010	706012	706013	706014	706016
	Parker	0861905050	0861945050	0861915050	0861935050	0861925050
10 Gal.	Greer	706020	706022	706023	706024	706026
	Parker	0861905100	0861945100	0861915100	0861935100	0861925100
15 Gal.	Greer	706030	706032	706033	706034	706036
	Parker	0861905150	0861945150	0861915150	0861935150	0861925150
5,000 PSI Bottom Repairable Bladder Kits (7/8" Valve Stem - Old Style)						
2 1/2 Gal.	Parker	0850695025	0856665025	0850705025	0851055025	0851045025
5 Gal.	Parker	0850695050	0856665050	0850705050	0851055050	0851045050
10 Gal.	Parker	0850695100	0856665100	0850705100	0851055100	0851045100
15 Gal.	Parker	0850695150	0856665150	0850705150	0851055150	0851045150

How to Order Bladder Accumulators

Bladder accumulators and gas bottles can be specified by using the symbols in the chart below to develop a model number. Select only those symbols that represent the features desired, and place them in the sequence indicated by the example at the top of the chart.

Series	Size	Construction	Gas Pressure	Hyd. Port[1]	Bladder/Seal Compound	Design Modification	Design Code
BA	001	B	3	T	01	–A	1

Series	
BA	Accumulator
BG	Gas Bottle
BT	Transfer Barrier

Size		Available 3000 PSI	Available 5000 PSI
C10	10 Cl	•	
001	1 Pint	•	
002	1 Quart	•	
005	150 Cl	•	
01	1 Gallon	•	•
02	2½ Gallon	•	•
05	5 Gallon	•	•
10	10 Gallon	•	•
11	11 Gallon	•	
15	15 Gallon	•	•

Type of Construction	
B	Bottom Repairable Standard on all sizes
T	Top Repairable Optional for 2½ Gallon and up

Working Pressure	
3	3,000 PSI (330 bar CE only)
4	4,000 PSI
5	5,000 PSI
6	6,600 PSI
Y	Special

Hydraulic Port		
T	**SAE Straight Thread O-Ring (Standard)**	
	10 Cl	SAE #8
	1 Pint & 1 Quart	SAE #12
	150 Cl	SAE #16
	1 Gallon	SAE #20
	2½ Gallon thru 15 Gallon	SAE #24
U	**NPT Pipe (No Cost Option)**	
	10 Cl	3/4" NPT Male
	1 Pint & 1 Quart	3/4" NPTF
	150 Cl	1" NPTF
	1 Gallon	1 1/4" NPTF
	2½ Gallon thru 15 Gallon	2" NPTF
F	**SAE 4-Bolt Split Flange (No Cost Option)**	
	10 Cl thru 150 Cl (3K)	N/A
	1 Gallon (3K)	1 1/4" Code 61 (3000 PSI)
	1 Gallon (5K)	1 1/4" Code 62 (6000 PSI)
	2½ Gal. thru 15 Gal. (3K)	2" Code 61 (3000 PSI)
	2½ Gal. thru 15 Gal. (4K)	1 1/2" Code 62 (6000 PSI)
	2½ Gal. thru 15 Gal. (5K)	1 1/2" Code 62 (6000 PSI)
L	**CE 2" Flange**	
H	**High Flow 4" NPT Male (Extra Cost Option)** Available on 2½ Gallon thru 15 Gallon Sizes only (3000 PSI)	
A	**High Flow 4¼-8 UN-2 Straight Thread Male (Extra Cost Option)** Available on 2½ Gallon thru 15 Gallon Sizes only (3000 PSI)	
C	**Medium Flow M95x2 Straight Thread Male (Extra Cost Option)** Available on 2½ Gallon thru 15 Gallon Sizes only (3000 PSI)	
X	**NPT Pipe Undersized (No Cost Option)** 2½ Gallon thru 15 Gallon Sizes only (3000 PSI)	1-1/4" NPT
R	**BSPP**	
	10 Cl	N/A
	1 Pint & 1 Quart	3/4-14
	150 Cl	1-11
	1 Gallon	1 1/4-11
	2½ Gallon thru 15 Gallon	2-11
Y	**ISO 6149-1**	
	10 Cl	M18 x 1.5
	1 Pint & 1 Quart	M27 x 2
	150 Cl	M33 x 2
	1 Gallon	M42 x 2
	2½ Gallon thru 15 Gallon	M48 x 2
G	**Metric**	
	10 Cl	M18 x 1.5
	1 Pint & 1 Quart	M27 x 2
	150 Cl	M33 x 2
	1 Gallon	M42 x 2
	2½ Gallon thru 15 Gallon	M48 x 2
S	**Special**	

Design Code	
1	Standard
*	Number given

Design Modification (1st Digit)	
Blank	Standard
W	Water/Chemical Service▲
M	Poppet Type L0789000K

Design (2nd Digit)	
A	Standard ASME (1 Gallon & up)
C	SELO
D	ASME (< 1 Gallon)
E	CE Marking
G	Appendix 22 Shell
S	Special

▲ Consult factory when using water/chemical service with any port other than the standard SAE.

Bladder/Seal Compound	
01	Buna-Nitrile (Std.)
04	Hydrin (Optional)
06	Butyl (Optional)
08	EPR (Optional)
28	Fluoroelastomer (Optional)

* 1 Gal. through 15 gal. – A.S.M.E. design with "U" stamp.
1 Pt., 1 Qt. and 150 C.I. – A.S.M.E. design, available with "U" stamp.
If "U" stamp is required, it must be specified at time of order.

NOTE: A.S.M.E. documentation or any other certification must be requested at time of order.

Diaphragm Accumulators

AD Series

IN THIS SECTION

Overview	65
Specifications	66
Models, Capacities & Dimensions	67
Options & Accessories	68
Ordering Information	69

Features

- Operating Pressures to 250 Bar
- Capacities from .075 to 2.80 Liters
- Compact and Lightweight
- Low Cost, Non-Repairable Design
- Hydrin Diaphragms
- Durable Metric Gas Valve

Diaphragm accumulators provide an affordable means of enhancing the performance of a hydraulic system. They are suitable for storing energy under pressure, absorbing hydraulic shocks, and dampening pump pulsation and flow fluctuations. Diaphragm accumulators provide dependable performance, maximum efficiency, and long service life in a lightweight, compact design.

Why Use Diaphragm Accumulators?

- improves system efficiency
- supplements pump flow
- supplies power in emergency
- compensates for leakage
- absorbs hydraulic shocks
- very contamination tolerant
- cost effective
- compact, lightweight
- safety, non-repairable design
- very quick response
- works well with water, low lubricity fluids

Parker Diaphragm Accumulators… Your #1 Choice!

Parker is the leading manufacturer of accumulators in North America. Parker's broad standard offering includes piston, bladder and diaphragm accumulators. For your convenience, Parker offers the latest in accumulator sizing technology with its *inPHorm Accumulator Sizing and Selection Software.*

Specifications

Materials

- Shell – high strength alloy steel
- Ports – steel
- Button – Delrin
- Gas Valve Stem – steel
- Diaphragms – Hydrin (ECO)

Max. Compression Ratio (max. working pressure/precharge pressure): 8 to 1 on .075 liter through 1.4 liter; 4 to 1 on 2 liter and larger

Maximum Flow Rates

Size (liters)	Maximum Recommended Flow Rates			
	Normal Operation		When Fully Discharging	
	LPM	GPM	LPM	GPM
0.075, 0.16	40	11	10	2.6
0.32 to 1.40	100	26	40	11
2.00 to 2.80	160	42	60	16

Pressure Ratings – See Models, Capacities and Dimensions for pressure ratings by size, all rated at minimum 4 to 1 design factors.

Fluids – Parker's diaphragm accumulators are compatible with most petroleum-based industrial or water-based flame resistant fluids. See diaphragm material options or consult factory for details.

Precharge – Units are shipped with a nominal nitrogen precharge as standard. For specific precharge pressure, specify charge pressure at the time of order.

Available Options

- Diaphragm Compounds
- Gas Valves – M28 x 1.5 standard
  – ISO 4570-8VI gas valve (consult factory)
- Hydraulic Ports – SAE standard
  – others (consult factory)

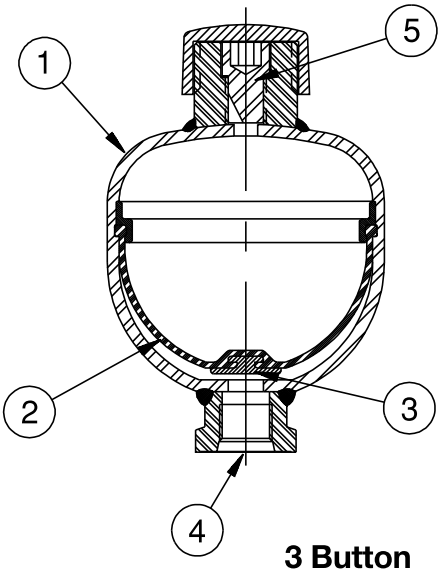

1 Shell

The shell is manufactured from a high strength alloy steel. The non-repairable electron-beam welded construction reduces size, weight, and, ultimately, initial cost.

2 Diaphragm

The flexible diaphragm provides excellent gas and fluid separation. Diaphragms are available in Hydrin (ECO) compound which provides excellent service with most mineral fluids. ECO offers excellent low-temperature performance for mobile applications.

3 Button

The button closes the fluid port when the accumulator is fully discharged to prevent diaphragm extrusion, a low cost alternative to more complex and expensive valve-spring designs.

4 Fluid Port

SAE straight thread for easy installation and leak-free service.

5 Gas Valve

Metric M28X1.5 gas valve is durable, leak-free and offers the flexibility of checking or charging the accumulator. See page 102 for charging and gauging accessories. U.S. Gas Valve is also available. See model numbering information.

Models, Capacities and Dimensions

Model	Size	MOP[1]	A	B	C	D	E	F	Weight
	liters (cu in)	bar (PSI)	mm (in.)					Port (thread)	kg. (lb.)
AD007A25T9A1	0.075 (5)	250 (3600)	111 (4.37)	20 (0.79)	64 (2.52)	30 (1.18)	32 (1.26)	SAE #6 (9/16 - 18)	0.65 (1.4)
AD016A25T9A1	0.16 (10)	250 (3600)	120 (4.72)	20 (0.79)	75 (2.95)	32 (1.26)	32 (1.26)	SAE #6 (9/16 - 18)	1.0 (2.2)
AD032A16T9A1	0.35 (20)	160 (2300)	136 (5.35)	22 (0.87)	92 (3.62)	63 (2.48)	41 (1.61)	SAE #8 (3/4 - 16)	1.3 (2.9)
AD050A16T9A1	0.50 (30)	160 (2300)	149 (5.87)	22 (0.87)	103 (4.06)	70 (2.76)	41 (1.61)	SAE #8 (3/4 - 16)	1.5 (3.3)
AD075A18T9A1	0.75 (45)	180 (2600)	166 (6.54)	22 (0.87)	121 (4.76)	78 (3.07)	41 (1.61)	SAE #8 (3/4 - 16)	2.6 (5.7)
AD075A25T1A1	0.75 (45)	250 (3600)	173 (6.81)	22 (0.87)	127 (5.00)	81 (3.19)	41 (1.61)	SAE #8 (3/4 -16)	3.2 (7.1)
AD100A20T9A1	1.00 (60)	200 (2900)	180 (7.09)	22 (0.87)	136 (5.35)	63 (2.48)	41 (1.61)	SAE #8 (3/4 - 16)	3.5 (7.7)
AD140A25T9A1	1.40 (85)	250 (3600)	198 (7.80)	22 (0.87)	155 (6.10)	72 (2.83)	41 (1.61)	SAE #8 (3/4 - 16)	6.0 (13)
AD200A25T9A1	2.00 (120)	250 (3600)	251 (9.88)	22 (0.87)	155 (6.10)	72 (2.83)	41 (1.61)	SAE #8 (3/4 - 16)	7.5 (17)
AD280A25T9A1	2.80 (170)	250 (3600)	268 (10.6)	22 (0.87)	174 (6.85)	87 (3.43)	41 (1.61)	SAE #8 (3/4 - 16)	10 (22)

[1] *Maximum Operating Pressure.*

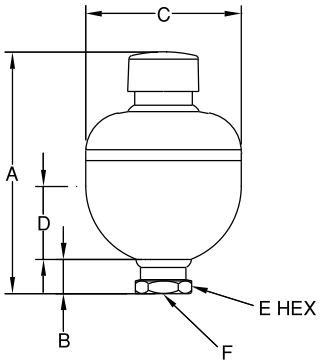

Metric Gas Valve

Parker AD Series diaphragm accumulators are fitted as standard with metric M28X1.5 gas valves. This rugged gas valve features a internal hex locking screw with sealing washer. Charging and pressure checking can be accomplished by utilizing the M28X1.5 charging and gauging assembly shown in Accumulator Accessories.

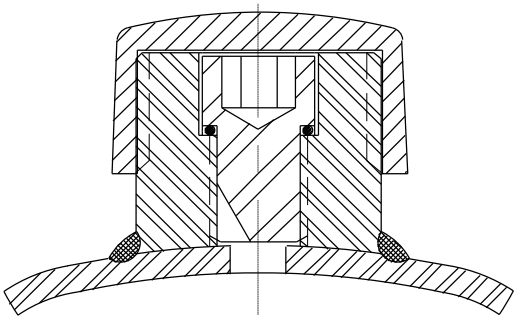

U.S. Gas Valve

Parker AD Series diaphragm accumulators can be fitted with an optional US gas valve. The US gas valve features an internal gas valve core and a sealing washer. Charging and pressure checking can be accomplished by utilizing standard charging and gauging assembly as shown in Accumulator Accessories.

Assembly Part No. L08700150A

Item	Part No.	Qty.	Description
1	148146 0000	1	Protective Cover
2	087036 0031	1	Dyna Seal
3	582222 0000	1	Valve Core
4	135238 0000	1	Gas Valve Housing
5	870016 0000	1	Gas Valve Seal

Assembly Part No. L087001500

Item	Part No.	Qty.	Description
3	582222 0000	1	Valve Core
4	135238 0000	1	Gas Valve Housing
5	870016 0000	1	Gas Valve Seal

NOTE: *For assembly of gas valve to cap, use 9 ft/lbs.*

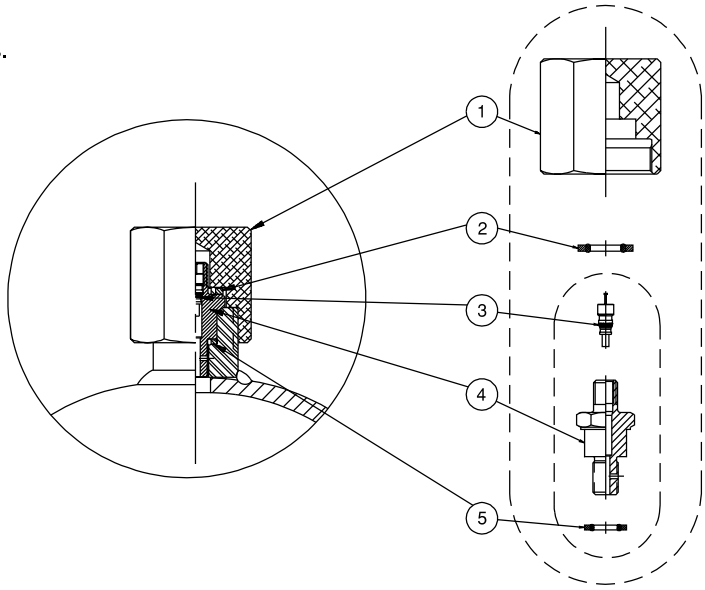

Standard Diaphragm Materials

The following table lists Hydrin's recommended operating temperature ranges and the types of fluids that are generally compatible.

Seal Code	Polymer	Recommended Operating Temperature Range	Maximum Temperature with Reduced Life	General Application & Compatibility[1]
9	Hydrin (Lo-Temp)	-40°F to 176°F -40°C to 80°C	200°F 93°C	Compatible with most mineral oil based fluids and maintains flexibility at low temps

[1] *Consult your local Parker distributor or the factory for fluid compatibility information. Temperature ranges may vary depending upon the fluid used in the hydraulic system.*

How to Order Diaphragm Accumulators

AD Series diaphragm accumulators can be specified by using the symbols in the chart below to develop a model number. Select only those symbols that represent the features desired, and place them in the sequence indicated by the example at the top of the chart.

Series	Size	Construction	Pressure	Port	Diaphragm	Variation	Code
AD	007	A	25	T	9	A	1

AD Series Diaphragm Accumulators

A Std. Metric Gas Plug
B U.S. Gas Valve

T SAE Straight Thread

9 Hydrin

A Standard
S Special

1 Standard
***** Special Design No. Assigned

Code	Size	MOP[1]
007	0.075 liter (5 in³)	250 Bar (3600 PSI)
016	0.16 liter (10 in³)	250 Bar (3600 PSI)
032	0.32 liter (20 in³)	160 Bar (2300 PSI)
050	0.50 liter (30 in³)	160 Bar (2300 PSI)
075	0.75 liter (45 in³)	180 Bar (2600 PSI)
075	0.75 liter (45 in³)	250 Bar (3600 PSI)
100	1.00 liter (60 in³)	200 Bar (2900 PSI)
140	1.40 liter (85 in³)	250 Bar (3600 PSI)
200	2.00 liter (120 in³)	250 Bar (3600 PSI)
280	2.80 liter (170 in³)	250 Bar (3600 PSI)

See "Size" for MOP[1] Ratings	
16	160 Bar (2300 PSI)
18	180 Bar (2600 PSI)
20	200 Bar (2900 PSI)
25	250 Bar (3600 PSI)

[1] *Maximum Operating Pressure*

Notes

Parker Hannifin
Global Accumulator Division
United States

Inline Pulse-Tone™

Hydraulic Shock Suppressors

IN THIS SECTION

Overview/Introduction 71
Specifications 74

Models, Capacities & Dimensions

3000 PSI 75
5000 PSI 77
Options & Accessories 79
Ordering Information 80

Features

- Three Bladder Polymers for a Wide Range of Fluids and Temperatures
- NPT, BSPP, SAE or Split Flange Connections
- Mounting in Any Position
- 3000 PSI Models for Water/Chemical Service

Parker Hannifin
Global Accumulator Division
United States

Construction

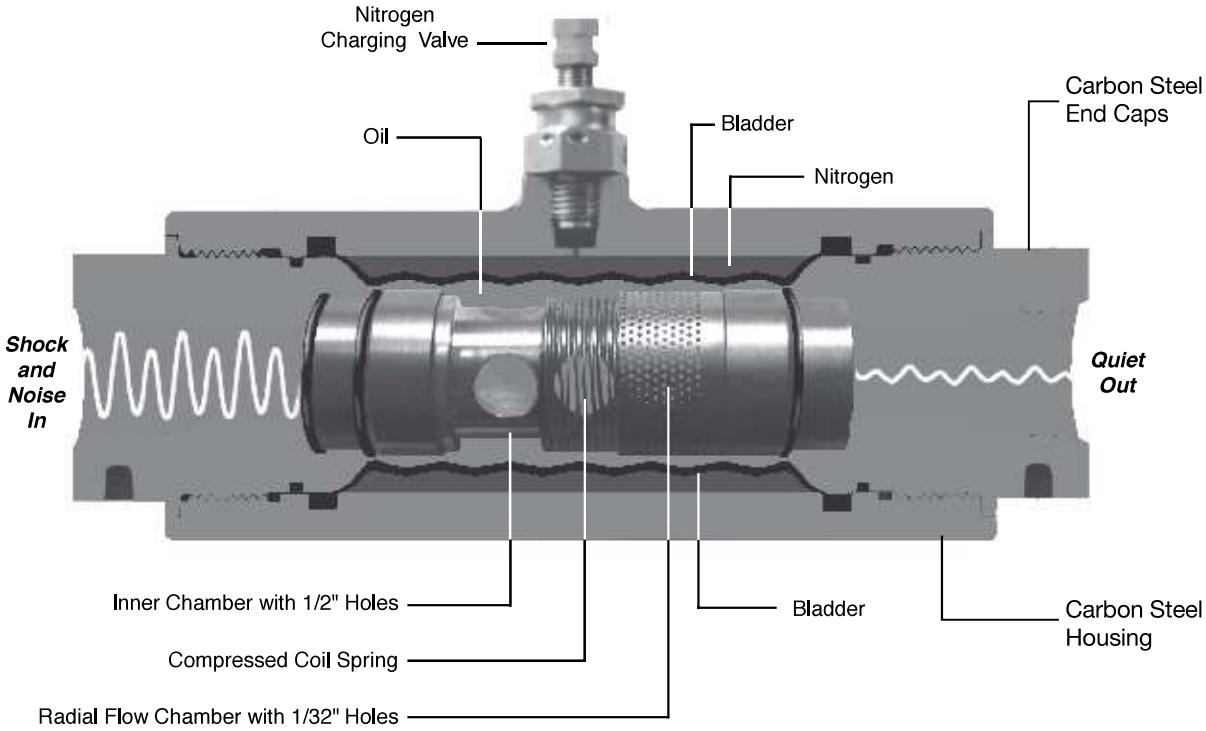

Capabilities

- reduces system noise, which can reduce the overall sound level in the work environment
- reduces system pressure ripples, providing smoother operation and potentially better quality control
- reduces shock, decreasing system wear and maintenance costs
- Pulse-Tones can be delivered with specified pre-charge, lowering installation costs

Water Service Option

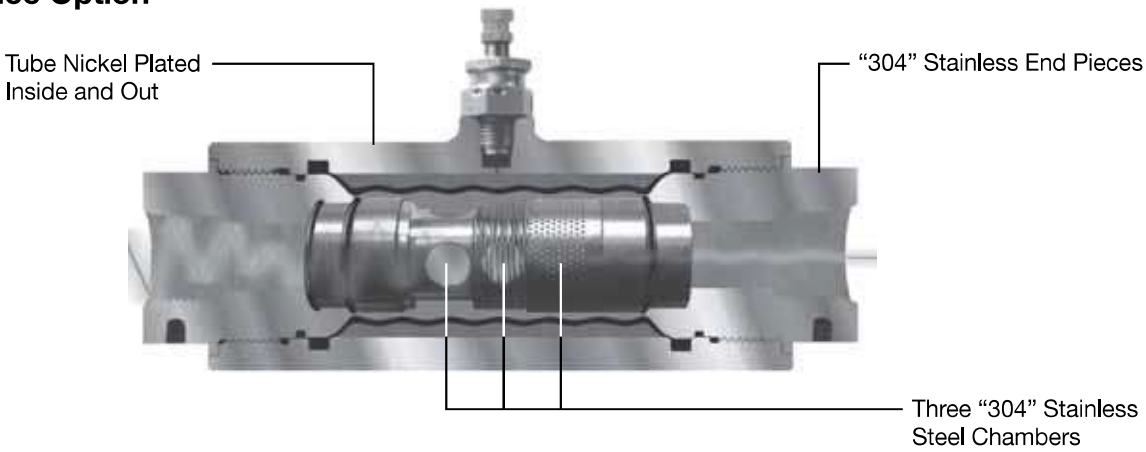

Why Should You Use the PULSE-TONE inline™ Suppressor?

Noise pollution is one of the hottest topics in the hydraulic industry today. Lab tests show that pump noise levels are increased by 2-3 dB(A) just by adding 12 feet of outlet and return lines. The lines do not generate noise. They radiate noise when they respond to pulsations or vibrations. The pulsations are usually generated by the pump, and the vibrations are radiated by large flat machine surfaces.

Not only do hydraulic lines radiate noise, but they frequently provide the primary path for propagating noise from the pump to components that, in turn, react to the noise and radiate additional sound. This helps explain why many pump manufacturers have a very low dB(A) pump rating, but when the pump is installed on a power unit, the sound rating is much higher.

It is almost impossible to forecast how much additional sound the hydraulic lines and surrounding structure will radiate. This is why many power units are enclosed after they have been manufactured and installed.

The Inline Pulse-Tone reduces pump pulsations and shock. When you stop pulsation and vibration, you stop the cause of component wear and leakage. A power unit with an Inline Pulse-Tone installed can operate at higher RPM with smaller, less expensive components . . . and less noise.

NOTE OF INTEREST: An increase of 2.71 dB doubles the intensity noise level.

How Does the PULSE-TONE inline™ Work?

An Inline Pulse-Tone suppressor is located as close to the pump as possible, usually directly at the pump outlet, to stop pulsations and noise before they travel through the piping and radiate off other structural components.

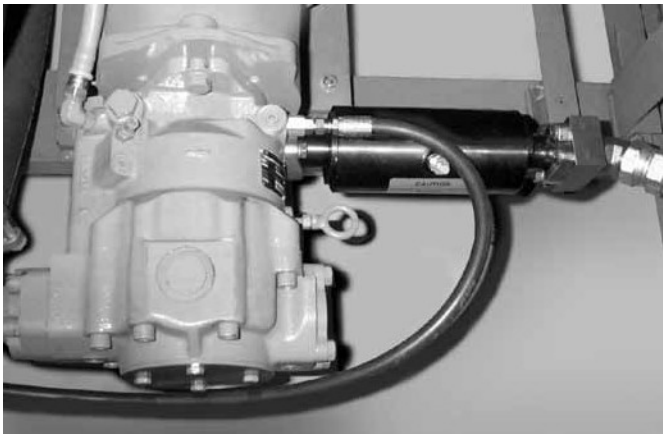

As shown in the diagram on the facing page, oil flowing into the Pulse-Tone goes through three different baffles or diffusers. These metal baffles are designed to convert 1/2" diameter holes to 1/32" diameter holes. The total radial distance through these baffles is only 1/4".

After passing through these holes, pulsations strike a nitrogen charged rubber bladder. The bladder deflects each time it is hit by a pulsation. This slight deflection of the bladder reduces the shock and noise.

The bladder is usually charged with nitrogen to 50% to 60% of the hydraulic operating pressure. The 1/32" diameter holes in the last baffle are so small that the bladder cannot extrude into them.

The large area of the bladder, its ability to oscillate at a high frequency and the short distance each pulsation has to travel once it enters the unit explain the effectiveness of the Pulse-Tone.

Selecting a PULSE-TONE inline™ is Easy!

No complex sizing formula is required. The Inline Pulse-Tone hydraulic shock suppressor is sized to match your hydraulic line size. There is a unit to fit every pipe and tube size from 3/8" to 2" with threaded or flanged connections. Models are available for both 3000 PSI and 5000 PSI hydraulic system pressures.

Models

- 3000 PSI rated for oil applications
- 3000 PSI Stainless Steel for water and chemical applications
- 5000 PSI for high-pressure oil applications

Port Connections

Four types of hydraulic line connections are available:

- NPT pipe connections from 3/8" to 2" pipe
- BSPP connections from 3/8" to 2" pipe
- SAE port connection from 3/8" to 2" tubing
- Split flange connection from 3/4" to 3"

Inline Pulse-Tone units can be ordered with any combination of ends, such as a split flange one end and a straight thread on the opposite end. When ordering, specify the type of connection for each end.

Bladder Materials

- Standard material is high temperature HNBR, -50° to 300°F (-45° to 149°C)
- Fluorocarbon or EPR bladders are available for special applications

Precharge

The unit can be shipped with a nitrogen precharge equal to 50% of hydraulic system pressure. Check precharge every three months to maintain maximum efficiency (See page 150 for procedures).

Mounting

The Pulse-Tone may be mounted in any position, horizontal or vertical. Since there are no moving parts, either end may be used for inlet or outlet. Split flange mounting makes it possible to break an existing connection to add the Pulse-Tone between the flanges.

Examples of Pulsation Reduction

The examples below show pulsations for pumps at various pressures before and after installation of the Inline Pulse-Tone.

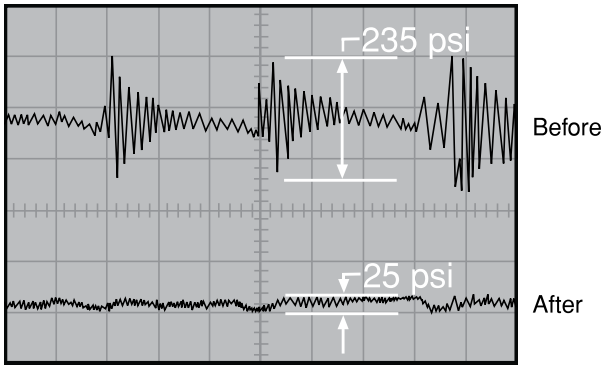

Piston Pump at 4000 psi and 1800 rpm

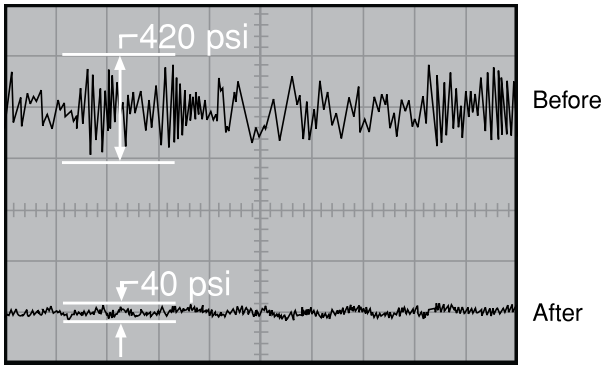

Piston Pump at 2000 psi and 1800 rpm

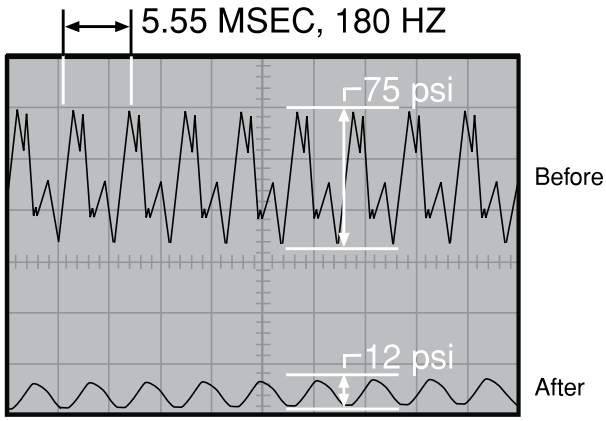

Piston Pump at 750 psi and 1200 rpm

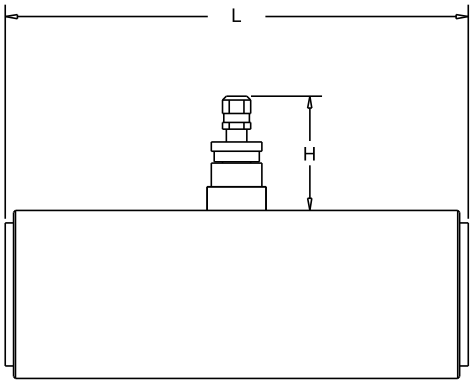

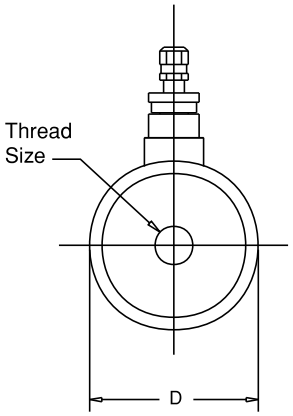

3000 PSI Pipe Thread Connections

Model	NPT Size	BSPP Size	Flow, GPM 15'/sec	Flow, GPM 20'/sec*	Dimensions, inch (mm)			Weight lbs. (kg)
					D	H	L	
PT250D1H	3/8 1/2	3/8 1/2	11.3	15.1	2.5 (63.5)	1.75 (44.5)	6.875 (174.6)	6.5 (3)
PT262D1H	3/4 1 —	3/4 1 1¼	24.2	32.1	2.625 (66.7)	1.75 (44.5)	8.13 (206.5)	8.0 (3.6)
PT400D1H	1 1¼ 1½	1 1¼ 1½	68.9	91.9	4.0 (101.6)	1.75 (44.5)	8.875 (225.4)	24.5 (11.1)
PT475D1H	1½ 2	1½ 2	128.0	171.0	4.75 (120.7)	1.75 (44.5)	10.5 (266.7)	31 (14.1)

3000 PSI Straight Thread Connections

Model	Tube Size	Thread	Flow, GPM 15'/sec	Flow, GPM 20'/sec*	Dimensions, inch (mm)			Weight lbs. (kg)
					D	H	L	
PT250D1H	.375 .500 .625	9/16–18 3/4–16 7/8–14	11.3	15.1	2.5 (63.5)	1.75 (44.5)	6.875 (174.6)	6.5 (3)
PT262D1H	.750 1.00 1.25	1-1/16–12 1-5/16–12 1-5/8–12	24.1	32.1	2.625 (66.7)	1.75 (44.5)	8.13 (206.5)	8 (3.6)
PT400D1H	1.00 1.25 1.50	1-5/16–12 1-5/8–12 1-7/8–12	68.9	91.9	4.0 (101.6)	1.75 (44.5)	8.875 (225.4)	24.5 (11.1)
PT475D1H	2.00	2-1/2–12	128.0	171.0	4.75 (120.7)	1.75 (44.5)	10.5 (266.7)	31 (14.1)

** Pressure drop in the suppressor is equal to pressure drop in 8" of tubing. Flow rates can be at least 50% higher than those listed for 20'/sec. without excessive pressure drop.*

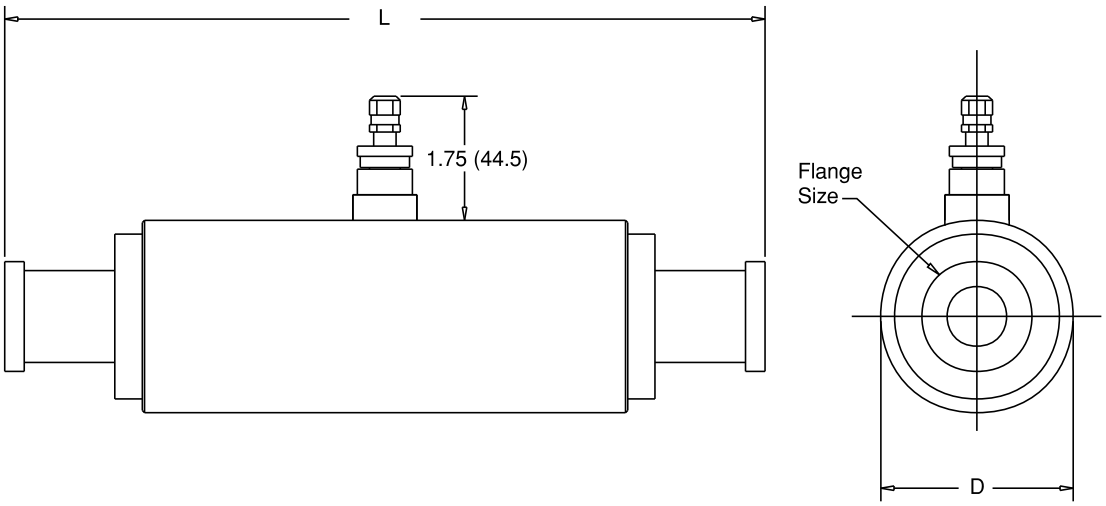

3000 PSI for Code 61 Flange Mounting

Model	Flange Size		Code 61 Flange					Code 62 Flange*				
		D	A	B	L	E	F	A	B	L	E	F
PT262D1HP	0.75	2.625 (66.7)	1.75 (44.5)	.56 (14.2)	10.12 (257.0)	1.875 (47.6)	0.875 (22.2)	2.000 (50.8)	.75 (19.1)	10.620 (269.7)	2.000 (50.8)	0.938 (23.8)
	1.00	2.625 (66.7)	1.75 (44.5)	.62 (15.7)	10.12 (257.0)	2.062 (52.4)	1.030 (26.2)	2.000 (50.8)	.94 (23.9)	10.620 (269.7)	2.250 (57.1)	1.094 (27.8)
	1.25	2.625 (66.7)	2.00 (50.8)	.56 (14.2)	10.62 (269.7)	2.312 (58.7)	1.188 (30.2)	2.250 (57.1)	1.06 (26.9)	11.120 (282.4)	2.625 (66.7)	1.250 (31.8)
PT400D1HP	1.25	4.00 (101.6)	2.25 (57.1)	.56 (14.2)	13.12 (333.2)	2.312 (58.7)	1.188 (30.2)	2.250 (57.1)	1.06 (26.9)	13.125 (333.4)	2.625 (66.7)	1.250 (31.8)
	1.50	4.00 (101.6)	2.25 (57.1)	.62 (15.7)	13.12 (333.2)	2.750 (69.9)	1.406 (35.7)	2.250 (57.1)	1.19 (30.2)	13.625 (346.1)	3.125 (79.4)	1.438 (36.5)
	2.00	4.00 (101.6)	2.38 (60.4)	.62 (15.7)	13.38 (339.9)	3.062 (77.8)	1.688 (42.9)	2.620 (66.5)	1.44 (36.6)	13.875 (352.4)	3.812 (96.8)	1.750 (44.5)
PT475D1HP	2.00	4.75 (120.6)	2.38 (60.4)	.62 (15.7)	15.00 (381.0)	3.062 (77.8)	1.688 (42.9)	2.620 (66.5)	1.44 (36.6)	13.875 (352.4)	3.812 (96.8)	1.750 (44.5)
	2.50**	4.75 (120.6)	2.875 (73.0)	.75 (19.0)	16.00 (406.4)	3.500 (88.9)	2.000 (50.8)	—	—	—	—	—
	3.00***	4.75 (120.6)	3.25 (82.6)	.88 (22.3)	16.75 (425.4)	4.188 (106.4)	2.438 (61.9)	—	—	—	—	—

** When using Code 62 flanges, do not exceed 3000 PSI pressure rating of the unit.*
*** Maximum pressure rating for this flange is 2500 PSI.*
**** Maximum pressure rating for this flange is 2000 PSI.*

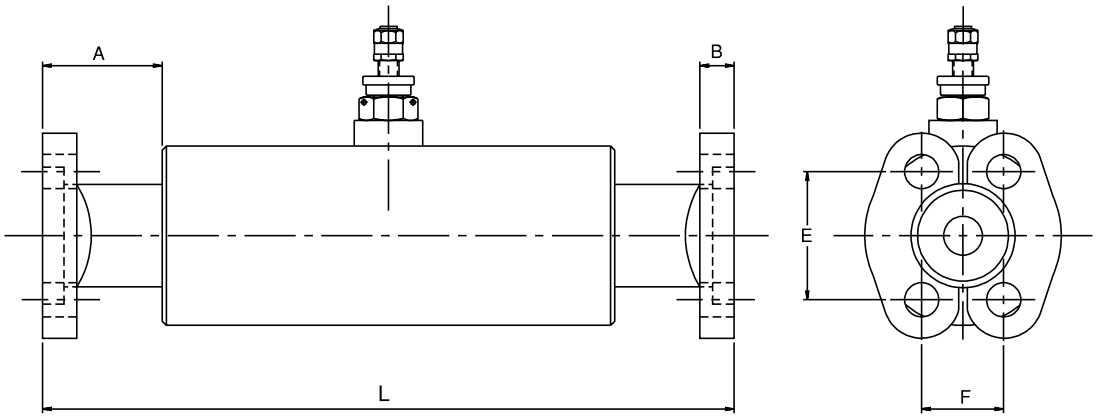

Ordering Note: *The Pulse-Tone flange mounted unit is not supplied with split flanges.*

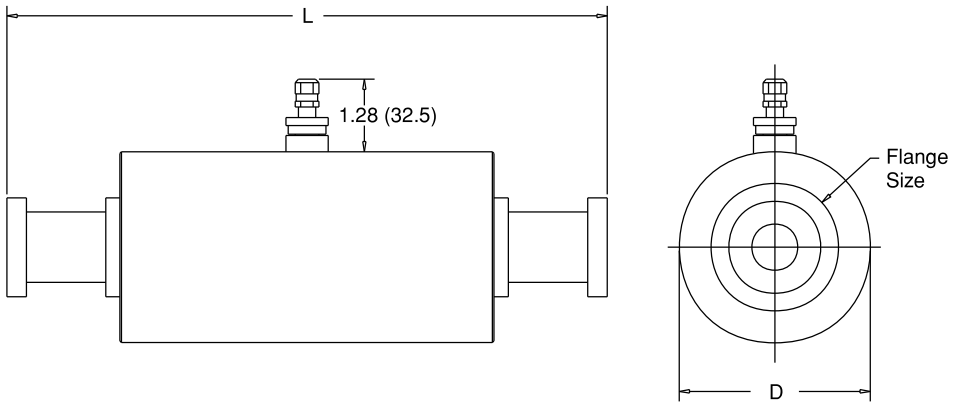

5000 PSI for Flange Mounting

Model Number	Flange Size	Code 62 Flange* Dimensions, inch (mm)					
		A	B	D	L	E	F
PT338C1HP	1.00	2.000 (50.8)	.94 (23.9)	3.5 (88.9)	10.620 (269.7)	2.250 (57.2)	1.094 (27.8)
	1.25	2.250 (57.2)	1.06 (26.9)	3.5 (88.9)	11.120 (282.4)	2.625 (66.7)	1.250 (31.8)
	1.25	2.250 (57.2)	1.06 (26.9)	5.00 (127.0)	13.125 (333.4)	2.625 (66.7)	1.250 (31.8)
PT500C1HP	1.50	2.500 (63.5)	1.19 (30.2)	5.00 (127.0)	13.625 (346.1)	3.125 (79.4)	1.438 (36.5)
	2.00	2.620 (66.5)	1.44 (35.6)	5.00 (127.0)	13.875 (352.4)	3.812 (96.8)	1.750 (44.5)

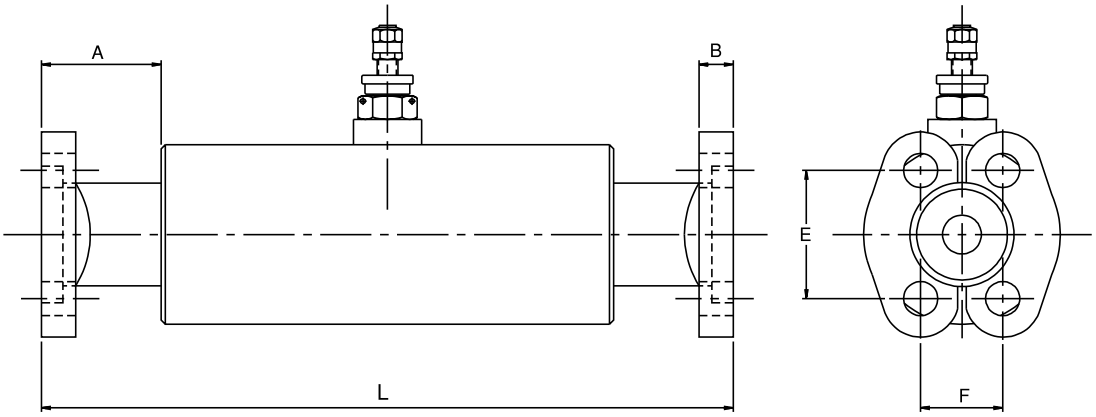

Ordering Note: *The Pulse-Tone flange mounted unit is not supplied with split flanges.*

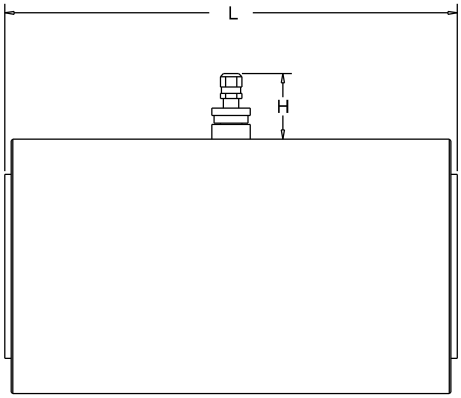

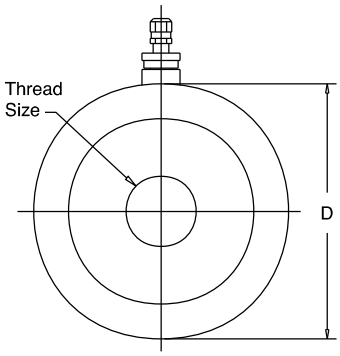

5000 PSI Straight Thread Connections

Model	For Tube Suppressor	Thread In Rate	Maximum Flow	Dimensions, inch (mm)			Weight lbs. (kg)
				D	H	L	
PT338C1H	.750 1.00 1.25	1-1/16–12 1-5/16–12 1-5/8–12	49 GPM	3.38 (85.8)	1.28 (32.5)	8.13 (206.5)	15 (6.36)
PT500C1H	1.00 1.25 1.50	1-5/16–12 1-5/8–12 1-7/8–12	90 GPM	5.0 (127.0)	1.28 (32.5)	8.88 (225.6)	48 (21.8)

Pressure drop in unit is equal to pressure drop of 8" of tubing. Flow rates can be at least 50% higher than those listed for 20'/sec without excessive pressure drop.

Repair Kits

Repair kits include a bladder and o-rings. Order by series and seal material.

Series	HNBR	EPR	Fluorocarbon
250	RKPT2500H0	RKPT2500D0	RKPT2500E0
262 & 338	RKPT2620H0	RKPT2620D0	RKPT2620E0
400 & 500	RKPT4000H0	RKPT4000D0	RKPT4000E0
475	RKPT4750H0	RKPT4750D0	RKPT4750E0

Charging and Gauging Assemblies

Includes 10 ft. charging hose with standard right-hand thread nitrogen fittings, adapter incorporating gas valve, bleeder valve and gas chuck and gauge. Note: For charging and gauging equipment and mounting clamp see Accumulator Accessories page 97.

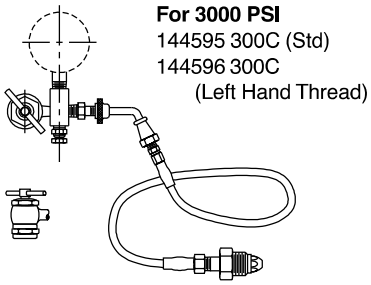

For 3000 PSI
144595 300C (Std)
144596 300C
(Left Hand Thread)

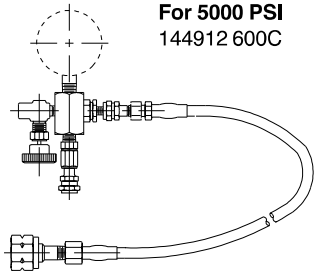

For 5000 PSI
144912 600C

Charging & Gauging Assemblies are sold in plastic carrying case.

How to Order

Use the symbols in the chart below to develop an Inline Pulse-Tone model number. Select only those symbols that represent the features desired and place them in the sequence indicated by the example at the top of the chart.

Series	Size	Pressure	Design	Seals	Hydraulic Ports* Type	Hydraulic Ports* Size	Hydraulic Ports* Type	Hydraulic Ports* Size	Precharge Pressure*
PT	250	D	1	H	–	–	–	–	–

3000 PSI Sizes	
250	2.50" Dia.
262	2.625" Dia.
400	4.00" Dia
475	4.75" Dia.
5000 PSI Sizes	
338	3.375" Dia.
500	5.00" Dia.

Pressure	
D	3000 PSI
C	5000 PSI

Seals	
D	EPR*
E	Fluorocarbon
H	**HNBR (STD)**

* Not available on 250 (2.50") size.

Precharge Pressure*

If desired, indicate pressure in psi.

If not desired, leave blank.

** Provided at additional cost.*

Design	
1	**Standard**
3	Water/Chem Service*
S	Special

* Available in Sizes 262 and 400 only.

Port Type		Port Size	
T	SAE	**B**	SAE #6 (9/16-18)
		C	SAE #8 (3/4-16)
		I	SAE #10 (7/8-14)
		D	SAE #12 (1-1/16-12)
		E	SAE #16 (1-5/16-12)
		F	SAE #20 (1-5/8-12)
		G	SAE #24 (1-7/8-12)
		H	SAE #32 (2-1/2-12)
U	NPT	**T**	3/8"
		U	1/2"
		V	3/4"
		W	1"
		X	1□"
		Y	1□"
		Z	2"
R	BSPP Parallel	**A**	3/8"
		B	1/2"
		C	3/4"
		D	1"
		E	1□"
		F	1□"
		G	2"
P	Code 61** Split Flange	**U**	3/4"
		V	1"
		W	1□"
		J	1□"
		L	2"
		M	2□"
		N	3"
P	Code 62** Split Flange	**K**	3/4"
		G	1"
		H	1□"
		P	1□"
		Q	2"

** Different type and size hydraulic ports may be ordered for each end. Specify left hand port first if ports are not the same.*

***When ordering different flange port sizes, specify port that connects to the pump first.*

Port Availability

Size	SAE #6	#8	#10	#12	#16	#20	#24	#32
250	●	●	●					
262				■	■	■		
400					■	■	■	
475								●
338				●	●	●		
500					●	●	●	

■ Available for Water/Chemical Service

Size	NPT/BSPP 3/8	1/2	3/4	1	1□	1□	2
250	●	●					
262			★	★	▲		
400				★	★	★	
475						●	●
338			▲	▲	▲		
500				▲	▲	▲	

▲ BSPP only
★ Available for Water/Chemical Service (NPT only)

Flange Availability

Size	Code 61 3/4	1	1□	1□	2	2□	3
262	●	●	●				
400			●	●	●		
475					●	◆	◆

Size	Code 62 3/4	1	1□	1□	2
338	●	●	●		
500			●	●	●

◆ Maximum pressure rating for the 2□" flange is 2500 PSI. Maximum pressure rating for the 3" flange is 2000 PSI.

Gas Bottles

Series GB

IN THIS SECTION

Overview	81
Specifications	82
Models, Capacities & Dimensions	83
Sizing & Ordering Information	84

Features

- Capacities from 2.5 to 50 Gallons
- High Strength Alloy Steel with Forged Ends
- Large 9" and 14" Diameter Shells
- ASME and CE Rated

Where space does not permit the installation of the required capacity accumulator, a smaller accumulator may be used by connecting it to a gas bottle(s) that can be located in a nearby spot where space is available. In some cases, an accumulator and gas bottle combination may be lower in cost, especially with large capacity applications.

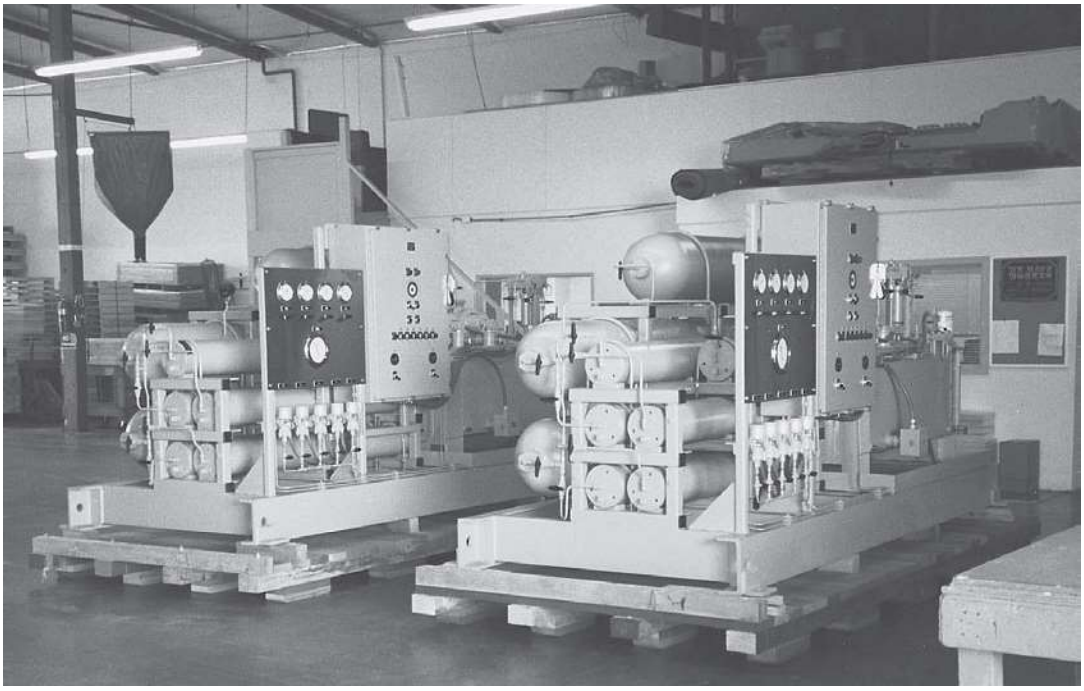

Why Use GB Series Gas Bottles?

- reduce initial hydraulic system costs
- broad range of sizes and operating pressures
- heavy duty forged construction
- minimize plumbing with fewer large bottles
- interface well with Parker's accumulator products, especially piston accumulators
- remote location from the accumulator
- reduced precharge maintenance
- improved system backup capacities

Parker GB Series Gas Bottles… The Right Choice!

Parker is the leading manufacturer of accumulators in North America. In addition to gas bottles, Parker's broad product line includes piston accumulators, bladder accumulators, and diaphragm accumulators. Parker's broad gas bottle offering includes:

- GB Series gas bottles (shown here)
- Piston Type Bottles (see Piston Accumulators)
- Bladder Type Bottles (see Bladder Accumulators)

Specifications

Materials

- Shell – high strength alloy steel, SA-372
- Ports – SAE #24 (ASME) & 2" BSPP (CE)
- SAE #5 gas valve end

Pressure Ratings – Parker's GB Series offers 3000 PSI, 3600 PSI and 4000 PSI ASME & 330 bar (4785 psi) CE gas bottles. See Models, Capacities and Dimensions for specific pressure ratings by size. Temperatures from -40°F to 200°F (-40°C to 93°C).

Optional Gas Valve – GB Series gas bottles are supplied without gas valves. See page 59 for gas valves.

Certifications – GB Series gas bottles are supplied as standard with ASME Section VIII Div. 1, Appendix 22 Certification. See page 6 for a complete certifications summary. CE/PED is available.

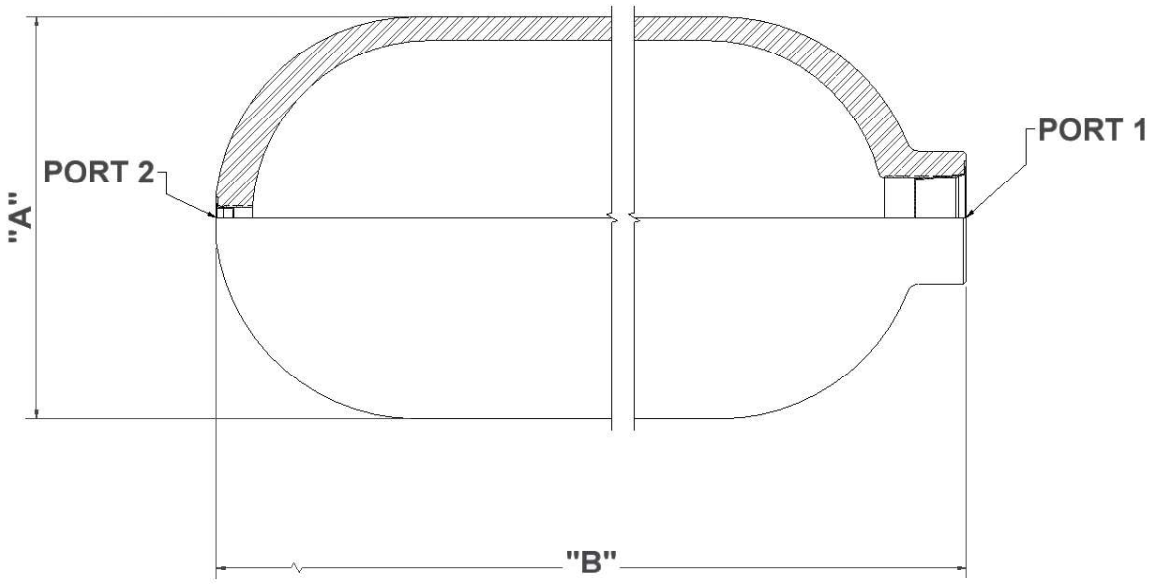

9" OD 3000 PSI Bottles
(ASME Appendix 22 = 4000 PSI)

Model #	Volume	A	B	ASME† Port 1	ASME† Port 2	CE†† Port 1	CE†† Port 2	Weight
9" OD Models	Gallons (liters)	inches (mm)	inches (mm)					lbs (kgs)
GB09002A30**TA1*1	2.5 (9.5)	9 (229)	17.47 (444)	SAE #24	SAE #5	2" BSPP	SAE #5	70 (32)
GB09005A30**TA2*1	5 (18.9)	9.0 (229)	29.25 (743)	SAE #24	SAE #5	2" BSPP	SAE #5	114 (52)
GB09010A30**TA2*1	10 (37.8)	9.0 (229)	52.81 (1341)	SAE #24	SAE #5	2" BSPP	SAE #5	205 (93)
GB09015A30**TA2*1	15 (56.7)	9.0 (229)	76.38 (1940)	SAE #24	SAE #5	2" BSPP	SAE #5	295 (134)
GB09020A30**TA2*1	20 (75.6)	9.0 (229)	99.94 (2539)	SAE #24	SAE #5	2" BSPP	SAE #5	386 (175)

14" OD 3000 PSI Bottles
(ASME Appendix 22 = 3600 psi)

Model #	Volume	A	B	ASME† Port 1	ASME† Port 2	CE†† Port 1	CE†† Port 2	Weight
14" OD Models	Gallons (liters)	inches (mm)	inches (mm)					lbs (kgs)
GB14026A30**TA2*1	26.4 (100)	13.8 (351)	59.94 (1523)	SAE #24	SAE #5	2" BSPP	SAE #5	493 (224)
GB14032A30**TA2*1	31.7 (120)	13.8 (351)	70.21 (1783)	SAE #24	SAE #5	2" BSPP	SAE #5	574 (260)
GB14040A30**TA2*1	39.6 (150)	13.8 (351)	85.52 (2172)	SAE #24	SAE #5	2" BSPP	SAE #5	693 (314)
GB14048A30**TA2*1	47.6 (180)	13.8 (351)	101 (2566)	SAE #24	SAE #5	2" BSPP	SAE #5	814 (369)
GB14053A30**TA2*1	52.8 (200)	13.8 (351)	111 (2820)	SAE #24	SAE #5	2" BSPP	SAE #5	893 (405)

† Model code changes to indicate ASME Appendix 22 design, however all dimensional data is the same.
†† Model code changes to indicate CE 330 bar design, however all dimensional data is the same.
Gas valves, brackets, charging and gauging assemblies and other accessories are sold seperately.

Gas Bottle and Accumulator Sizing Information

When hydro-pneumatic accumulators are sized, a required accumulator capacity or volume is calculated. This calculated capacity is the total "gas" volume required to discharge a specified amount of fluid at a given pressure differential and temperature. When selecting an accumulator(s) to satisfy the requirement, two different choices are possible:

- A single accumulator with the required gas capacity.
- A single smaller accumulator with gas bottle(s) with the required total combined gas capacity.

Though all three of the above choices have their advantages, for large capacity applications the single smaller accumulator with gas bottle(s) usually proves to be the most cost effective. When sizing an accumulator with gas bottle(s) system, care must be taken when selecting the accumulator to insure that the piston does not bottom out on the end caps when being charged with or when discharging fluid. As a rule of thumb, size the accumulator with 20% to 25% greater capacity than the volume of fluid being discharged during operation. When selecting a gas bottle(s), make your selection such that the bottle(s) capacity plus the accumulator gas capacity will equal the total gas capacity required.

Example:

You calculated that you need an accumulator with an 40 gallon gas capacity. You know that 16 gallons of fluid will be discharged during operation. The proper selection would be a 20 gallon accumulator with a 20 gallon gas bottle.

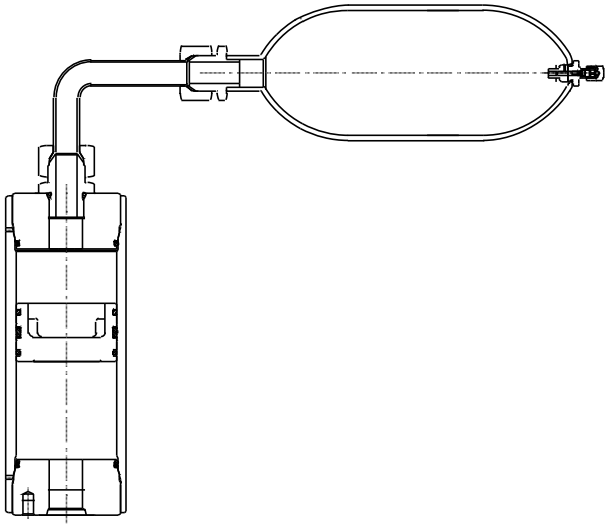

Calculation:
16 gallons + 25% = 20 gallons
40 gallons - 20 gallons = 20 gallons.

How to Order Gas Bottles

GB Series gas bottles can be specified by using the symbols in the chart below to develop a model number. Select only those symbols that represent the features desired, and place them in the sequence indicated by the example at the top of the chart.

GB 14040 A 30 TG TA 2 A 1

PRODUCT TYPE
GB - Gas Bottles

A-STANDARD

PRESSURE
30 - 3000 PSI [207 BAR] ASME
36 - 3600 PSI [248 BAR] ASME APX 22 - 14"
40 - 4000 PSI [276 BAR] ASME APX22 - 9"
48 - 4850 PSI [330 BAR] CE ONLY

CAPACITY (SIZE)
09002 - 9", 2.5 GALLON [9.5] LITER
09005 - 9", 5 GALLON [18.9] LITER
09010 - 9", 10 GALLON [37.9] LITER
09015 - 9", 15 GALLON [56.9] LITER
09020 - 9", 20 GALLON [75.8] LITER

14026 - 14", 26.4 GALLON [100] LITER
14032 - 14", 31.7 GALLON [120] LITER
14040 - 14", 39.6 GALLON [150] LITER
14048 - 14", 47.5 GALLON [180] LITER
14053 - 14", 52.8 GALLON [200] LITER

PORT 1
TG - #24 SAE (ASME ONLY)
RG - 2 - 11 BSPP (CE ONLY)

OPTIONS
1 - PAINT
2 - NO PAINT

DESIGN MODIFICATION
A - STANDARD
S - SPECIAL
C - P.E.D. ("CE")

DESIGN NUMBER
1 - STANDARD
******* - SPECIAL DESIGN

PORT 2
TA = #5 SAE PORT
SEE CATALOG FOR OPTIONAL STEEL PLUGS OR GAS VALVES.
THESE MUST BE ORDERED SEPARATELY.

SBA Accumulator Safety Blocks

For working pressures up to 350 Bar (5075 PSI)

IN THIS SECTION

Overview 85
Technical Data 87

Models & Dimensions

SBA10 89
SBA20 90
SBA32 91
SBAT3L 92
SBAT3P 93
Adapters 94
Ordering Information 96

Features

- Available in 3 Sizes
- SAE and BSPP Porting
- CE Certified Relief Valve
- Lockout/Tagout Optional
- Buna or Fluorocarbon Seals
- Electrical Discharge Option

SBA Safety Blocks

Parker's range of SBA safety blocks is available in NG10, NG20 and NG32 sizes. SBA safety blocks combine all the features required to protect, isolate and discharge a hydraulic accumulator. The shut-off valve turns through 90° to isolate the accumulator instantly from the hydraulic system, in emergency or for maintenance purposes. Once isolated, the accumulator can be discharged to tank via a manual or electrically-controlled discharge valve. System protection is provided by a PED-approved, tamper-proof pressure relief valve.

SBA safety blocks permit safe, simple connection of an accumulator to a hydraulic system. Suitable for use with all types of accumulators – bladder, piston and diaphragm – their compact, multi-function design saves space and reduces connections. By cutting the time required for installation and maintenance procedures, SBA safety blocks enable productivity and profitability to be maximized while system downtime is kept to a minimum. To simplify installation, a full range of adapters is available to suit all common port sizes and styles. For diagnostic purposes and continuous pressure monitoring, all SBA safety blocks feature two maintenance ports.

The European Pressure Equipment Directive (PED) 97/23/EC states that a safety device must be fitted to all accumulators to provide a shut-off facility, pressure limiting and pressure release functions, and measurement points. Parker's SBA range fulfils all of these requirements in a single, compact unit.

The safety block should always be mounted as close as possible to the accumulator. Commissioning and maintenance of the safety block and associated equipment must be performed by qualified personnel.

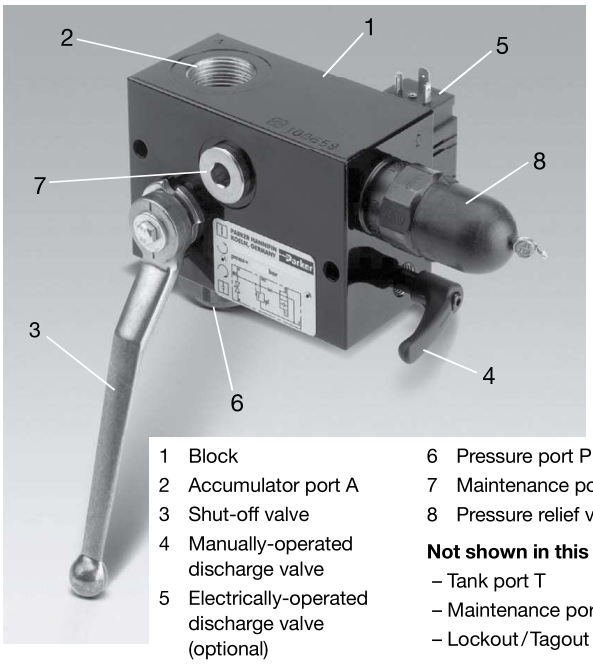

1 Block
2 Accumulator port A
3 Shut-off valve
4 Manually-operated discharge valve
5 Electrically-operated discharge valve (optional)
6 Pressure port P
7 Maintenance port M1
8 Pressure relief valve

Not shown in this view:
– Tank port T
– Maintenance port M2
– Lockout / Tagout Option

* ***Note:*** *When using the SBA Type E with a bladder accumulator, it is recommended that an orifice be installed in the "T" line to prevent rapid discharge in the event of a bladder failure.*

SBA Type M
Manually-Operated Discharge Valve

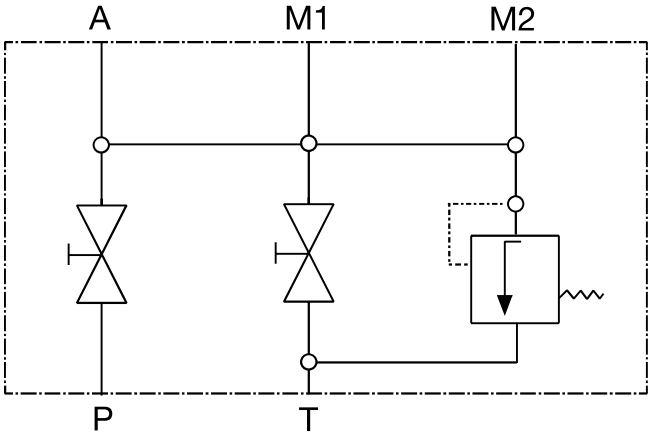

SBA Type E
Manually- and Electrically-Operated Discharge Valves

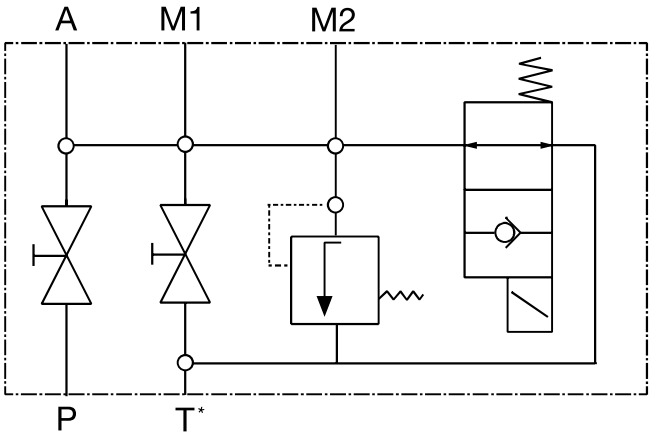

Technical Data

Construction

– shut-off valve . . . . . ball valve
– pressure relief. . . . . poppet-type valve with damping
– manually-operated discharge valve. . . . . poppet-type valve
– electrically-operated discharge valve . . . poppet-type valve (where fitted)
Port type. . . . . see table below
Mounting position . . . . . accumulator port A facing upwards
Mounting screws (not supplied) . . . . . M8 to grade 10.9, max. torque 26 + 4Nm
Ambient temperature. . . . . -30°C (-22°F) to +80°C (176°F)
Max. operating pressure . . . . . 350 bar (5075 PSI)
Relief flow rate G at p_{nom} . . . . . see table below
Fluid mineral oil according to DIN/ISO.
For other fluid types, please contact the factory.
Operating temperature. . . . . -15°C (5°F) to +80°C (176°F)
Viscosity. . . . . 10 to 800 mm^2/s
Δp-Q-graphs . . . . . see table below
Electrical discharge U=24VDC, 105VDC (for 115V/60 Hz AC supply), P=26W, 100% ED, IP 65 to DIN 40050, connector to DIN 43650 type A
Finish . . . . . black zinc phosphated
Seal material . . . . . Nitrile, Fluorocarbon

Dimensions and Weights

BSPP Version

Type	A[1]	P	T	M1	M2	Weight kg (lb)	Model Number
10M	M33x2	G1/2	G3/8	G1/2	G1/4	4.4 (9.7)	SBAR10M*
10E	M33x2	G1/2	G3/8	G1/2	G1/4	4.7 (10.4)	SBAR10E*
20M	M33x2	G1	G1/2	G1/2	G1/4	6.0 (13.2)	SBAR20M*
20E	M33x2	G1	G1/2	G1/2	G1/4	6.5 (14.3)	SBAR20E*
32M	Flange	G1 1/2	G1	G1/2	G1/4	12.0 (26.5)	SBAR32M*
32E	Flange	G1 1/2	G1	G1/2	G1/4	12.6 (27.8)	SBAR32E*

SAE Version

Type	A[1]	P	T	M1	M2	Weight kg	Model Number
10M	#16 SAE	#8 SAE	#6 SAE	#8 SAE	#4 SAE	4.4 (9.7)	SBAT10M*
10E	#16 SAE	#8 SAE	#6 SAE	#8 SAE	#4 SAE	4.7 (10.4)	SBAT10E*
20M	#16 SAE	#16 SAE	#6 SAE	#8 SAE	#4 SAE	6.0 (13.2)	SBAT20M*
20E	#16 SAE	#16 SAE	#6 SAE	#8 SAE	#4 SAE	6.5 (14.3)	SBAT20E*
3LM	2" Code 61	#24 SAE	#16 SAE	#8 SAE	#4 SAE	12.0 (26.5)	SBAT3LM*
3LE	2" Code 61	#24 SAE	#16 SAE	#8 SAE	#4 SAE	12.6 (27.8)	SBAT3LE*
3PM	1 1/2" Code 62	#24 SAE	#16 SAE	#8 SAE	#4 SAE	12.0 (26.5)	SBAT3PM*
3PE	1 1/2" Code 62	#24 SAE	#16 SAE	#8 SAE	#4 SAE	12.6 (27.8)	SBAT3PE*

[1] *A range of adapters is available for accumulator port A – see page 104.*

Pressure Relief Valve

The function of the pressure relief valve is to protect the accumulator in service. If pressure exceeds the relief valve setting, the valve lifts off its seat and fluid is discharged to tank, allowing pressure in the system to fall to a safe level.

Pressure Settings

Pressure p bar (PSI)	Item Number
50 (725)	SV050
70 (1015)	SV070
100 (1450)	SV100
120 (1740)	SV120
140 (2030)	SV140
160 (2320)	SV160
200 (2900)	SV200
210 (3045)	SV210
250 (3625)	SV250
280 (4060)	SV280
300 (4350)	SV300
330 (4785)	SV330

Because of its cartridge design, the pressure relief valve can be readily replaced by a valve with a different pressure setting, selected from the table. A new approval under PED 97/23/EC is not required following this change. The pre-set relief pressure, in bar, is stamped onto the identification plate.

Type Approval

The pressure relief valve is checked and securely sealed following approval, according to pressure vessel regulations. It carries a CE mark, type approval number and serial number. All valves are supplied with a certificate showing the pressure setting. The documents supplied with the pressure relief valve must be retained by the manufacturer, as they will be required in the event of repeat tests.

Manual and Electrical Discharge Valves

The discharge valve allows fluid stored in the accumulator to be discharged to tank. All models of SBA safety block are fitted with a manually-operated discharge valve. As an optional feature, an electrical discharge valve is available in addition to the manual valve. An electrical discharge valve should be specified where the safety block is to be mounted in a remote or inaccessible location. Manual-only versions of the SBA safety block are denoted by an M in the model code, see page 96, while models with both a manual and an electrical discharge valve are designated E.

Flow – Accumulator (A) to Pressure Port (P)

SBA10

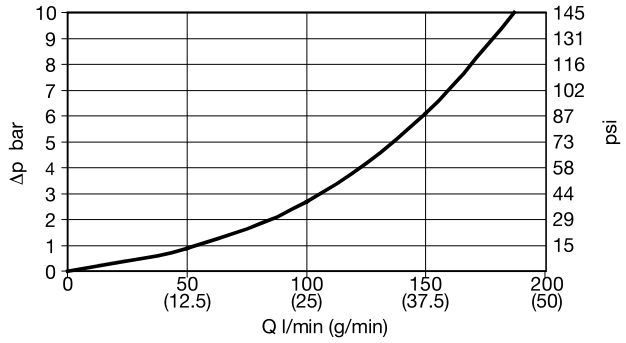

SBA20

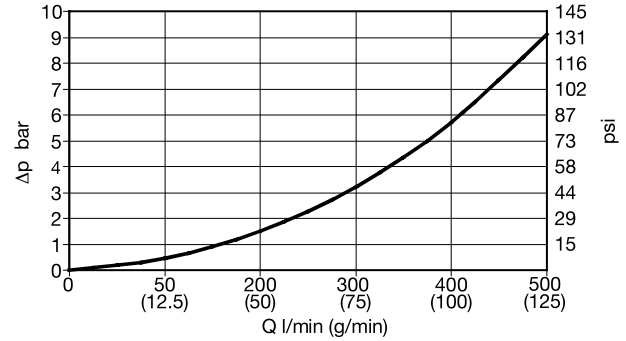

SBA32, 3L, 3P

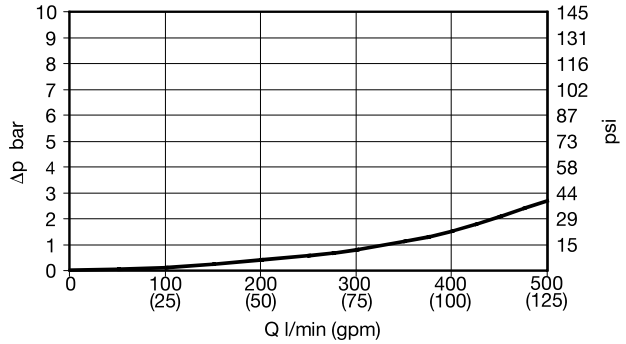

Flow Limits for Safety Valve SV – All Models

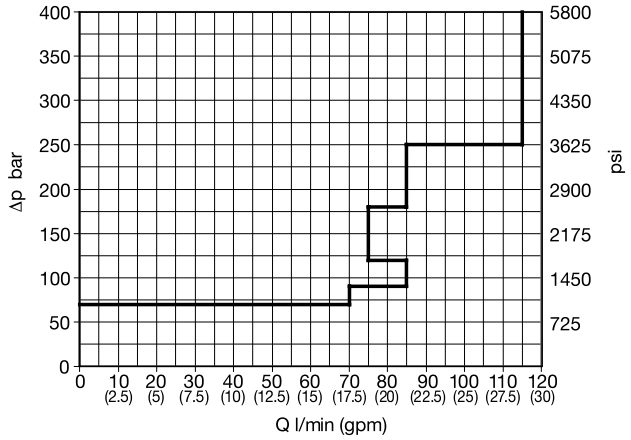

Reference Dimensions – SBAR10 and SBAT10

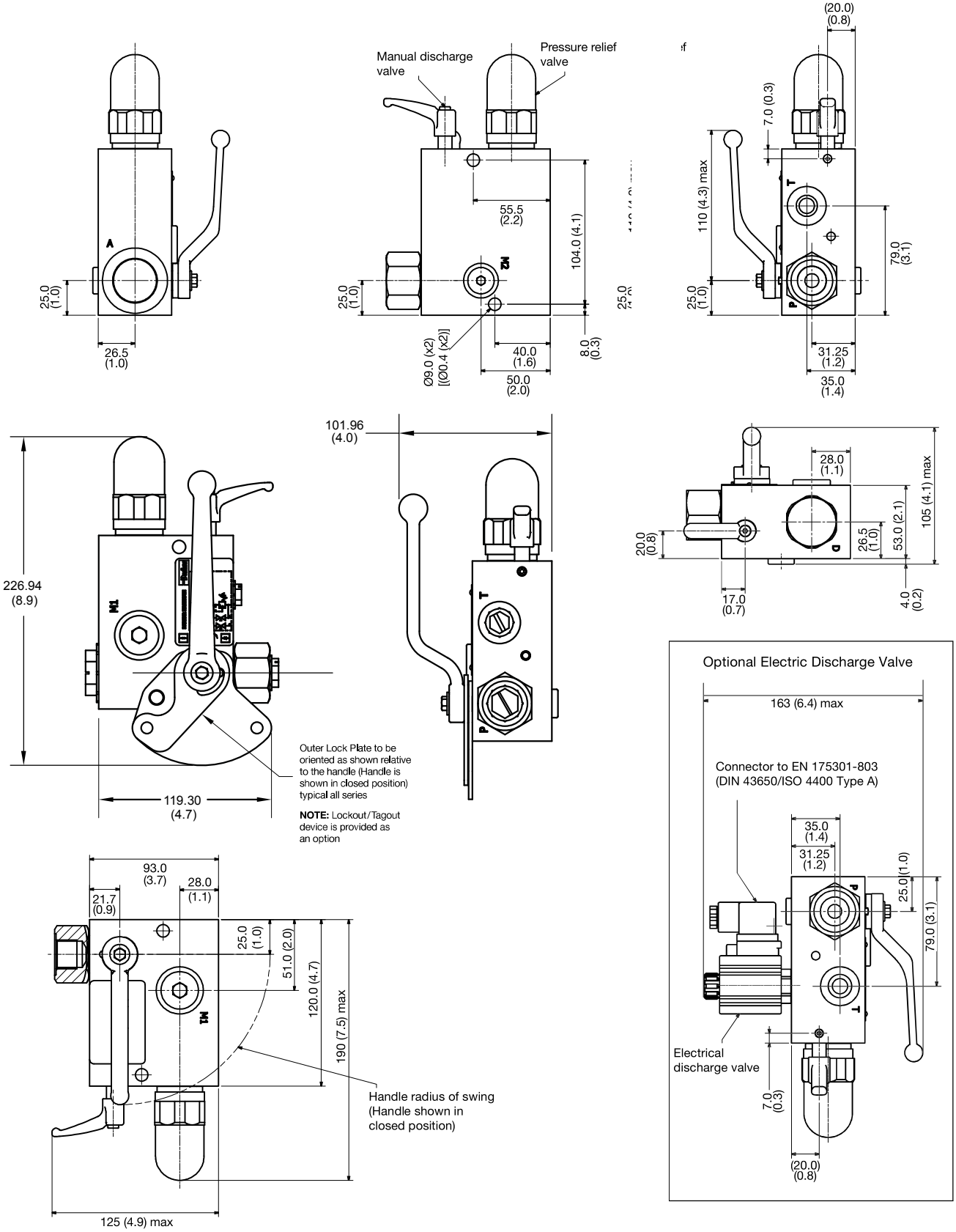

All dimensions are in millimeters (inches).

Reference Dimensions – SBAR20 and SBAT20

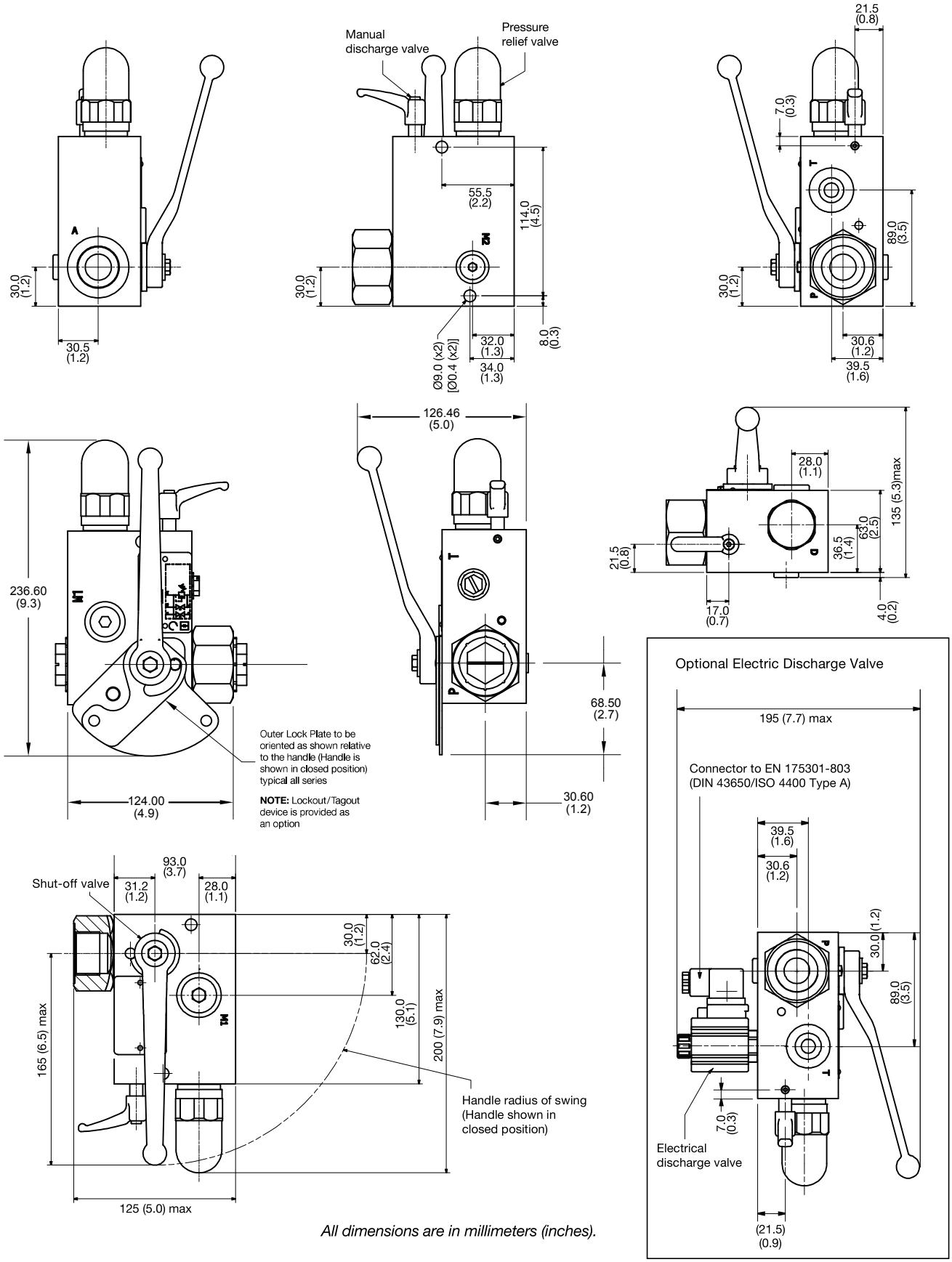

All dimensions are in millimeters (inches).

Reference Dimensions – SBAR32

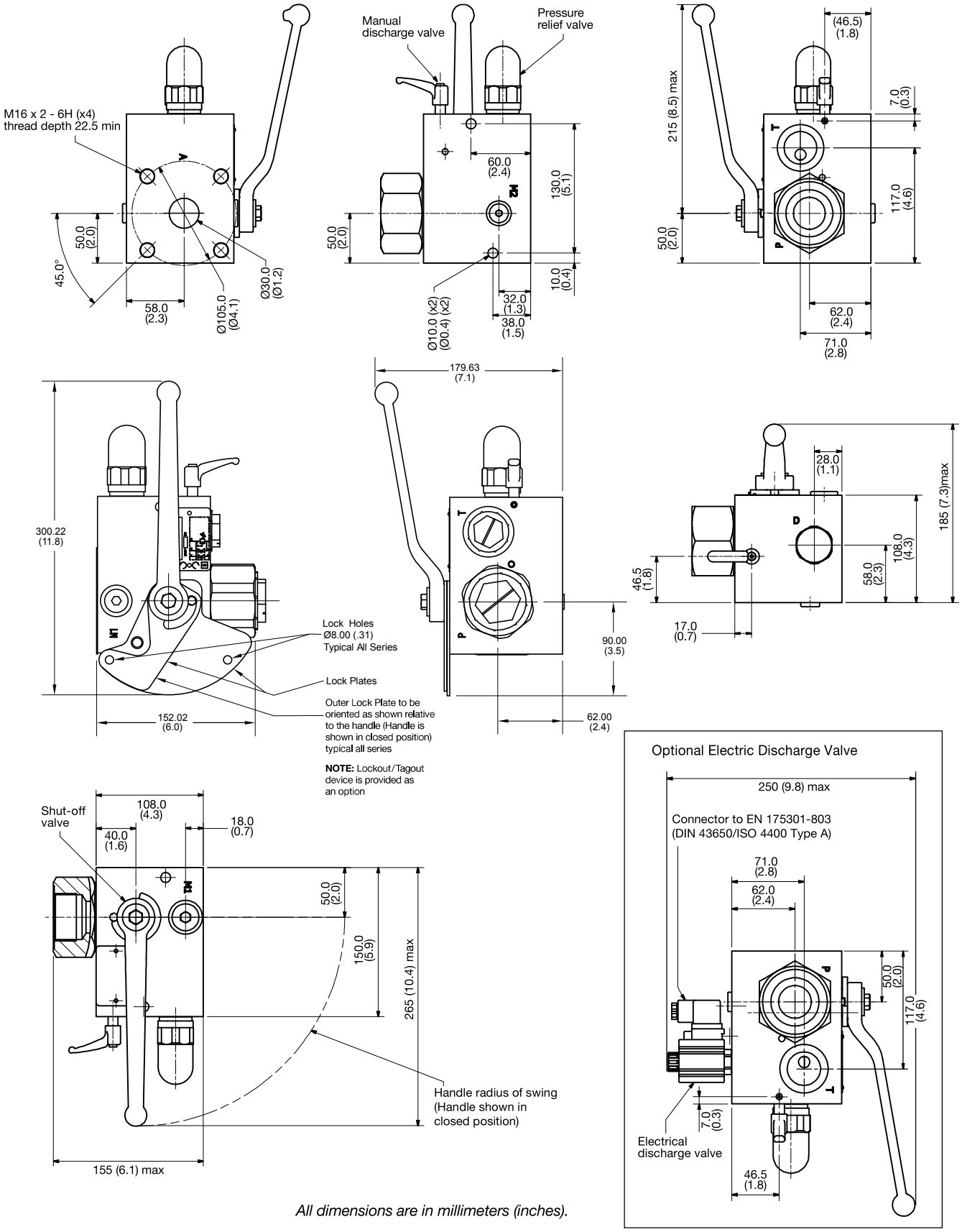

All dimensions are in millimeters (inches).

SBA Safety Blocks

Reference Dimensions – SBAT3L

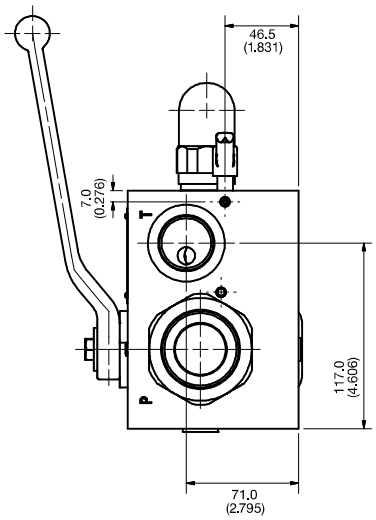

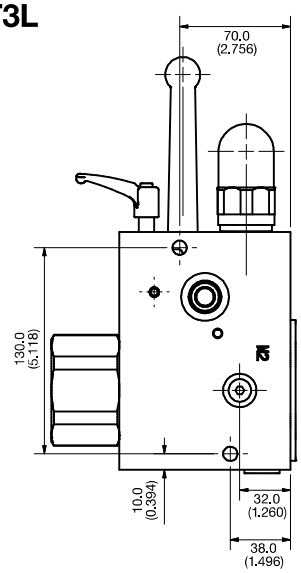

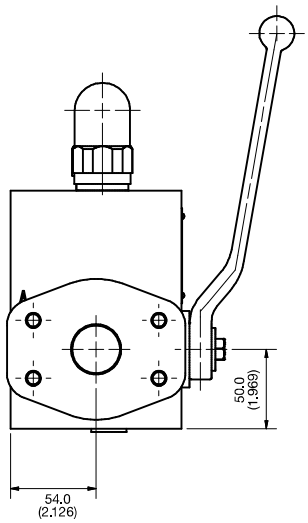

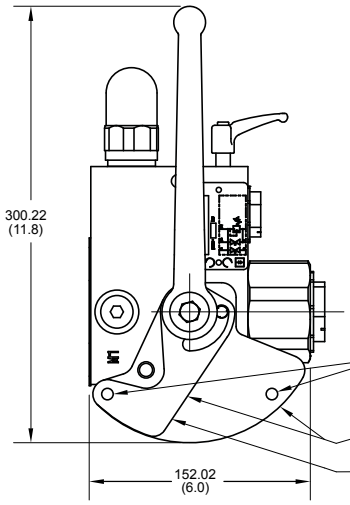

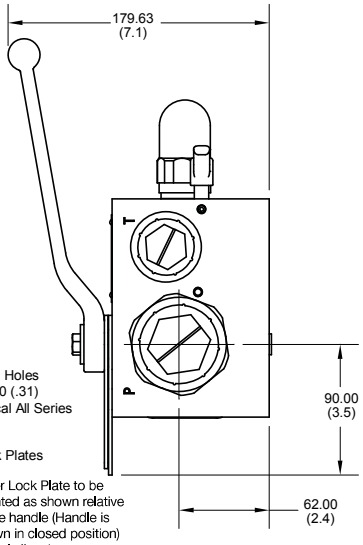

Lock Holes
Ø8.00 (.31)
Typical All Series

Lock Plates

Outer Lock Plate to be oriented as shown relative to the handle (Handle is shown in closed position) typical all series

NOTE: Lockout/Tagout device is provided as an option

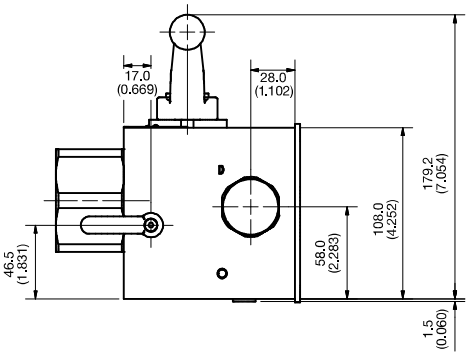

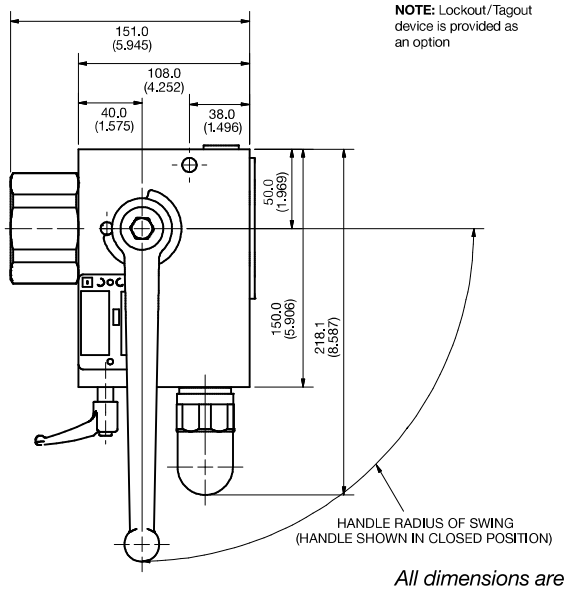

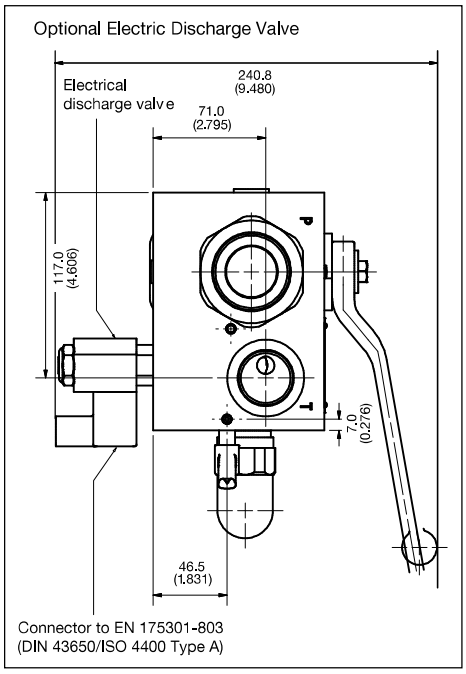

All dimensions are in millimeters (inches).

Reference Dimensions – SBAT3P

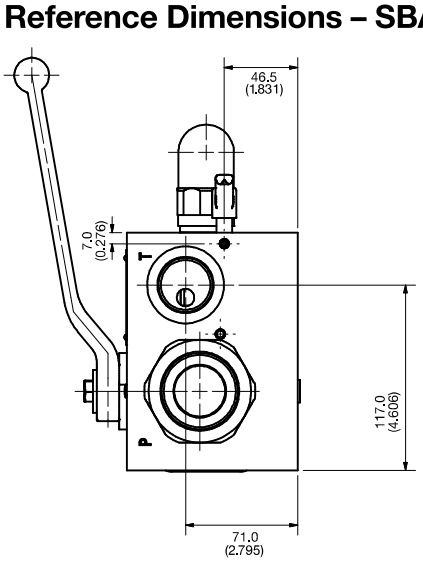

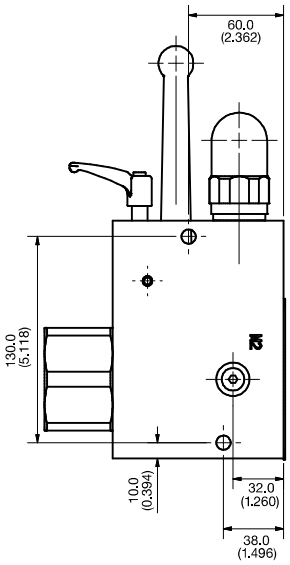

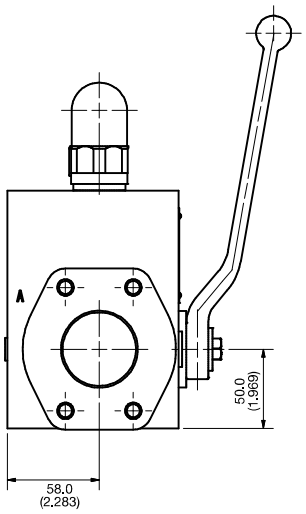

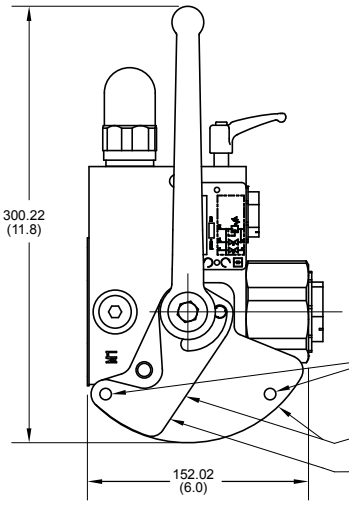

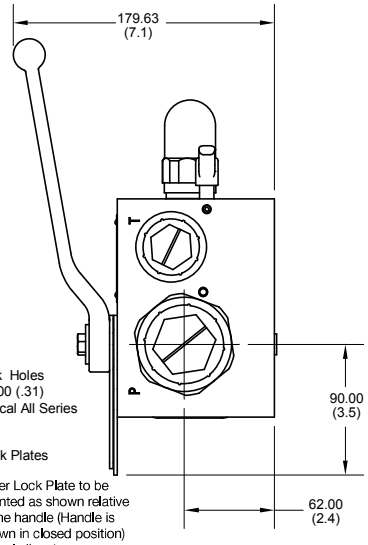

Lock Holes
Ø8.00 (.31)
Typical All Series

Lock Plates

Outer Lock Plate to be oriented as shown relative to the handle (Handle is shown in closed position) typical all series

NOTE: Lockout/Tagout device is provided as an option

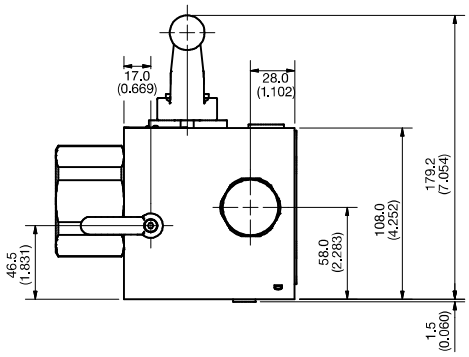

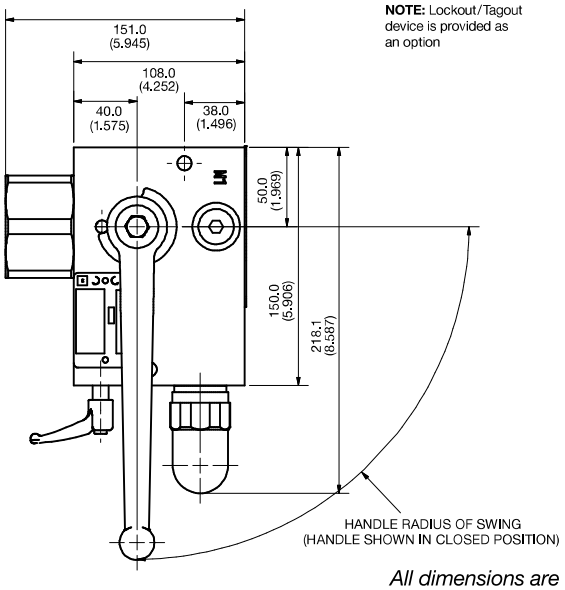

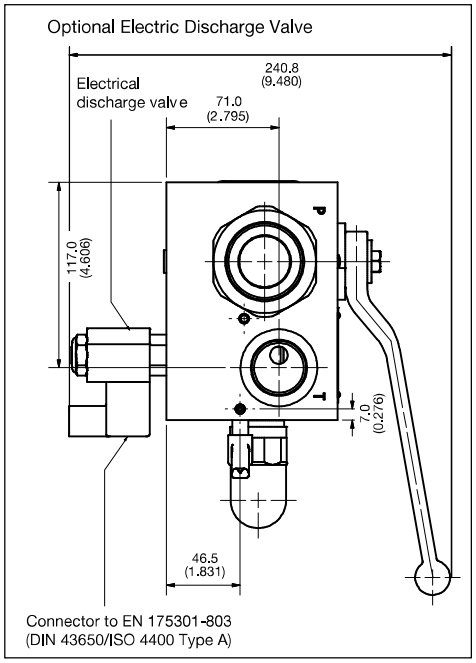

All dimensions are in millimeters (inches).

SBA Safety Blocks

Adapters – Accumulator to Safety Block

SBAR Series

Accumulator Fluid Port D1		Safety Block Port A	SW	L	L1	D2	D3	Part Number	Use with SBAR	For Accumulator Type		
										Bladder	Diaphragm	Piston
G3/4	ISO 228	M33x2	46	33	16	53	16	UEST-T-3/4	10 & 20	X		
G1-1/4	ISO 228	M33x2	55	41	20	63	20	UEST-T-1-1/4	10 & 20	X		
G2	ISO 228	M33x2	80	46	22	90	20	UEST-T-2	10 & 20	X		
G2	ISO 228	Flange 100	-	50	22	-	30	UEST-F-2	32	X		
G1/2	ISO 228	M33x2	46	34	14	53	12	UEST-T-1/2 ED	10 & 20		X	X
G3/4	ISO 228	M33x2	46	36	16	53	16	UEST-T-3/4 ED	10 & 20		X	X
G1-1/2	ISO 228	Flange 100	-	70	22	-	30	UEST-F-1-1/2	32			X

Threaded Adapter

UEST-T-xx

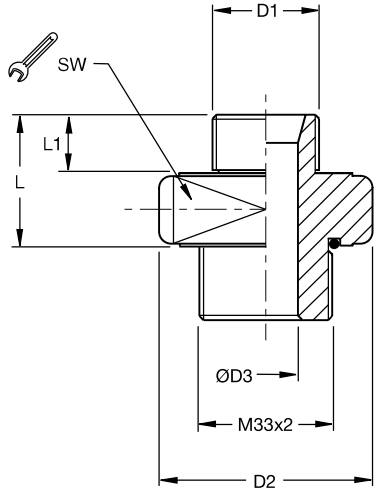

Flanged Adapter

UEST-F-xx

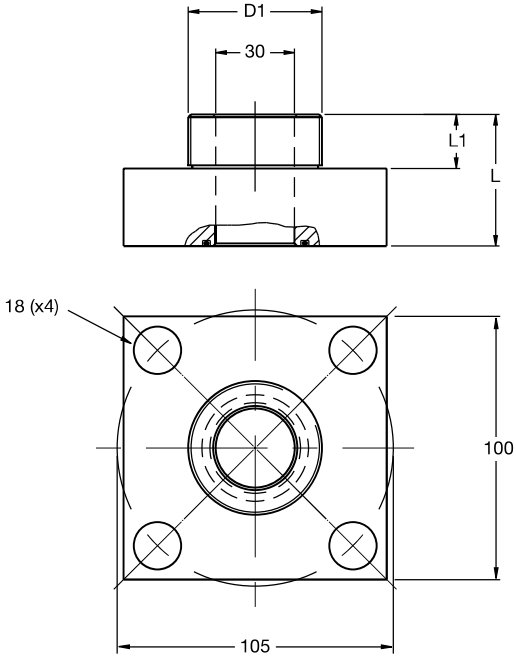

SBAT Series

Accumulator Fluid Port D1		Safety Block Port A	SW	L	L1	D2	D3	Part Number	Use with SBAT	For Accumulator Type		
										Bladder	Diaphragm	Piston
$^{3}/_{4}$-16	UNF-2A	#16 SAE	1-$^{1}/_{2}$	2.20	0.594	1-$^{5}/_{16}$-12	-	8727991608	10		X	X
1-$^{1}/_{16}$-12	UNF-2A	#16 SAE	1-$^{1}/_{2}$	2.20	0.594	1-$^{5}/_{16}$-12	-	8727991612	10			X
1-$^{5}/_{16}$-12	UNF-2A	#16 SAE	1-$^{1}/_{2}$	2.44	0.594	1-$^{5}/_{16}$-12	-	8727991616	10			X
1-$^{5}/_{8}$-12	UNF-2A	#16 SAE	1-$^{1}/_{2}$	2.60	0.594	1-$^{5}/_{16}$-12	-	8727991620	10	X		X
1-$^{7}/_{8}$-12	UNF-2A	#16 SAE	2-$^{1}/_{8}$	2.44	0.594	1-$^{7}/_{8}$-12	-	8727992416	10 / 20	X		X

SAE to SAE Adapter

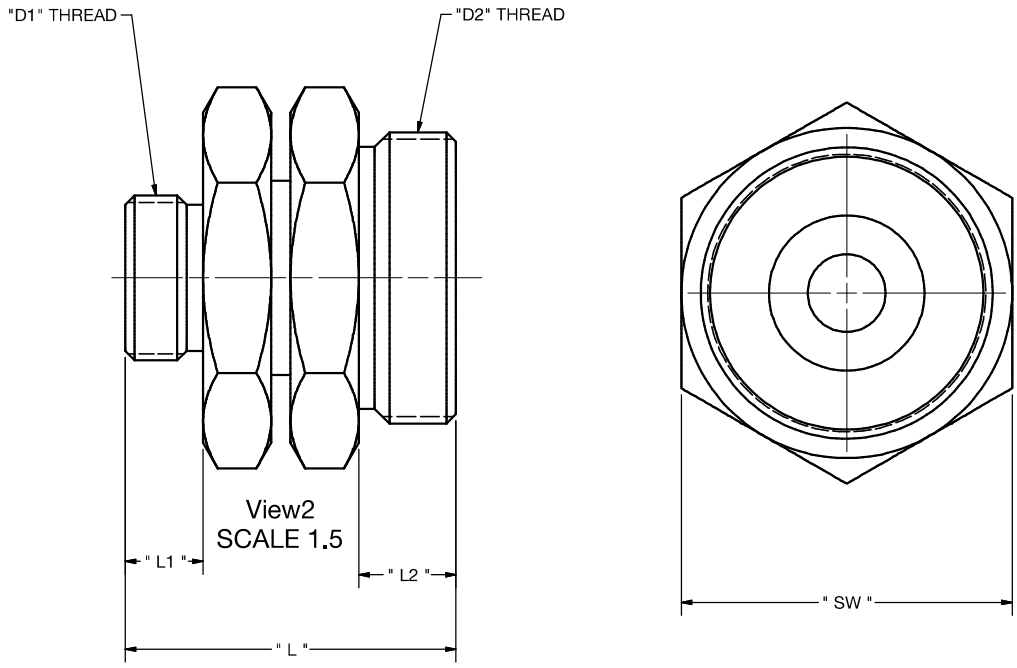

How to Order – Safety Block Model Code Structure

SBA T 3L E1 T 1 - 200 - T A 1

PRODUCT TYPE

SBA - SAFETY BLOCK

ACCUMULATOR PORTING

T---------SAE PORTS
R---------BSPP PORTS

SIZE

10------NG10 (SBAT & SBAR)
20------ NG20 (SBAT & SBAR)
32------NG32 (SBAR ONLY)
3L------NG32 W/ 2" CODE 61 (SBAT ONLY)
3P------NG32 W/ 1.5" CODE 62 (SBAT ONLY)

DISCHARGE VALVE

M1------MANUAL
E1------24V DC N/O
E2------24V DC N/C
E3------115V AC N/O
E4------115V AC N/C

PRESSURE PORT

T - THREADED

SEAL COMPOUND

1---NITRILE
5---FLUOROELASTOMER

PRESSURE SETTING

(CE APPROVED PRESET)
(RELIEF VALVE TYPE "T")

050------SET @ 50 BAR [725 PSI]
070------SET @ 70 BAR [1015 PSI]
100------SET @ 100 BAR [1450 PSI]
120------SET @ 120 BAR [1740 PSI]
140 -----SET @ 140 BAR [2030 PSI]
160------SET @ 160 BAR [2320 PSI]
200 -----SET @ 200 BAR [2900 PSI]
210 -----SET @ 210 BAR [3045 PSI]
250 -----SET @ 250 BAR [3625 PSI]
280------SET @ 280 BAR [4061 PSI]
300 -----SET @ 300 BAR [4351 PSI]
330------SET @ 330 BAR [4786 PSI]

ADJUSTABLE (NON-CE)
(RELIEF VALVE TYPE "A")

050-----26 TO 50 BAR [377 TO 725 PSI] RANGE
100-----51 TO 100 BAR [740 TO 1450 PSI] RANGE
200-----101 TO 200 BAR [1465 TO 2900 PSI] RANGE
300-----201 TO 315 BAR [2915 TO 4568 PSI] RANGE
330-----316 TO 345 BAR [4582 TO 5003 PSI] RANGE

THE NON-CE PRESSURE RELIEF VALVE ONLY
IS SET TO THE BOTTOM OF THE RANGE LISTED ABOVE AT THE FACTORY

FOR ADJUSTMENT:
CLOCKWISE WILL INCREASE PRESSURE
COUNTERCLOCKWISE WILL DECREASE PRESSURE

RELIEF VALVE TYPE

T-----PRESET PRESSURE (CE APPROVED)
A-----ADJUSTABLE (NON-CE)

DESIGN MODIFICATION

A--STANDARD
L---LOCK-OUT TAG-OUT PLATES
S--SPECIAL

DESIGN NUMBER

1----STANDARD
*******--SPECIAL DESIGN

Accumulator Accessories

For Piston, Bladder and Diaphragm Accumulators, Gas Bottles, SurgeKushons and PulseTones

IN THIS SECTION

Overview	97
Charging & Gauging Assemblies	98
Unloading Valves	103
Repair Tools	104
Port Adapters	104
Mounting Accessories	105

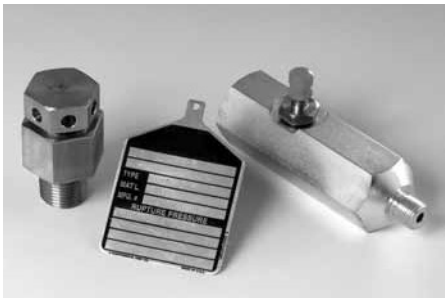

Charging & Gauging Assemblies

Charging and Gauging Assembly consists of 10' charging hose with standard right-hand thread nitrogen fittings, adapter incorporating gas valve, bleeder valve and gas chuck. Assemblies are packed in a plastic storage case. Gauge not included.

Assemblies Packed in Carrying Case

3000 PSI Charging & Gauging Assemblies (with 3000 PSI Gauge)			
Part Number	Piston Style	Bladder Style	Diaphragm Style
144595 3000	All	All*	with Cored valve
144596 3000	All	All*	with Cored valve
148675 3000	—	—	with M28 valve
087100 3000	—	1-15 gal.*	—
087102 3000	—	10-150 CI*	—
4000/5000 PSI Charging & Gauging Assemblies (with 5000 PSI Gauge)			
870816 5000	All	All	—

** Used primarily for top repairable accumulators and/or permanent mount gauge.*

Gauges

Gauges are 2½" dial type pressure gauges with 100 PSI graduation. Include blowout safety case and orifice surge damper.

Part Number	Pressure Range
087040 1000	0 - 1000 PSI
087040 2000	0 - 2000 PSI
087040 3000	0 - 3000 PSI
087040 4000	0 - 4000 PSI
087040 6000	0 - 6000 PSI

3000 PSI Piston and Bladder Accumulators, Diaphragms with Cored Valve (B Option)

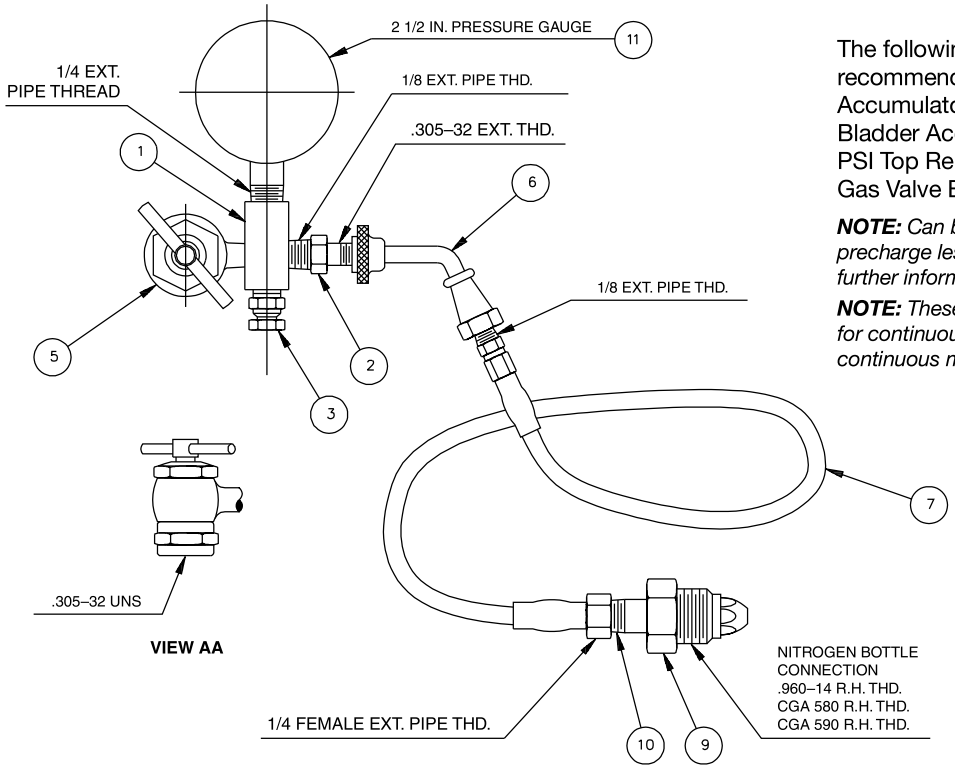

The following assemblies and parts are recommended for use on all 3000 PSI Piston Accumulators and 3000 PSI Bottom Repairable Bladder Accumulators. Can be used with 3000 PSI Top Repairable Accumulators, but require a Gas Valve Extension.

NOTE: *Can be used on all accumulators with a gas precharge less than 3000 PSI. Consult factory for further information.*

NOTE: *These assemblies are not recommended for continuous monitoring of gas precharge. For continuous monitoring, see Gauging Adapters.*

Item	Part Number	Description
1-10	1445950000	Standard Assembly with Right Hand (RH) Nitrogen Bottle Connection, No Gauge
1-11	1445950500	Standard Assembly RH Connection with 500 PSI Gauge
1-11	1445951000	Standard Assembly RH Connection with 1000 PSI Gauge
1-11	1445952000	Standard Assembly RH Connection with 2000 PSI Gauge
1-11	1445953000	Standard Assembly RH Connection with 3000 PSI Gauge
1-10L	1445960000	Optional Assembly with Left Hand (LH) Nitrogen Bottle Connection, No Gauge
1-5	0851220000	Gauging Assembly, No Hose or Gauge
1-5H	5420880000	Optional Gauging assembly w/ 2" Hose Ext. between Gas Chuck (5) and Adapter Cross (1), No Hose or Gauge
6-10	1457810000	Hose Assembly with RH Connection
6-10L	1457820000	Hose Assembly with LH Connection
1	5420910000	Adapter Cross
2	5420920000	Gas Valve with 1/8" NPT
3	0832140000	Bleeder Valve
5*	8708150000	Gas Chuck
6**	5420860000	Hose Coupling with Female Thread Connection
7	0870520000	Charging Hose
9	6661250000	Nitrogen Bottle Nut with RH Connection (CGA 580)
9L	6661260000	Nitrogen Bottle Nut with LH Connection (CGA 590)
10	6661240000	Nitrogen Bottle Nipple
11	See Gauges	2.5" Pressure Gauge SAE #6
	1333290000	Case with Insert for Complete Charging and Gauging Assembly
*	5824390000	Gasket for 5422150000 (5)
**	8702770000	Gasket for 5420860000 (6)

A 10-150 cu in Bladders (087102*000)

B 1-15 gal Bladders (087100*000)

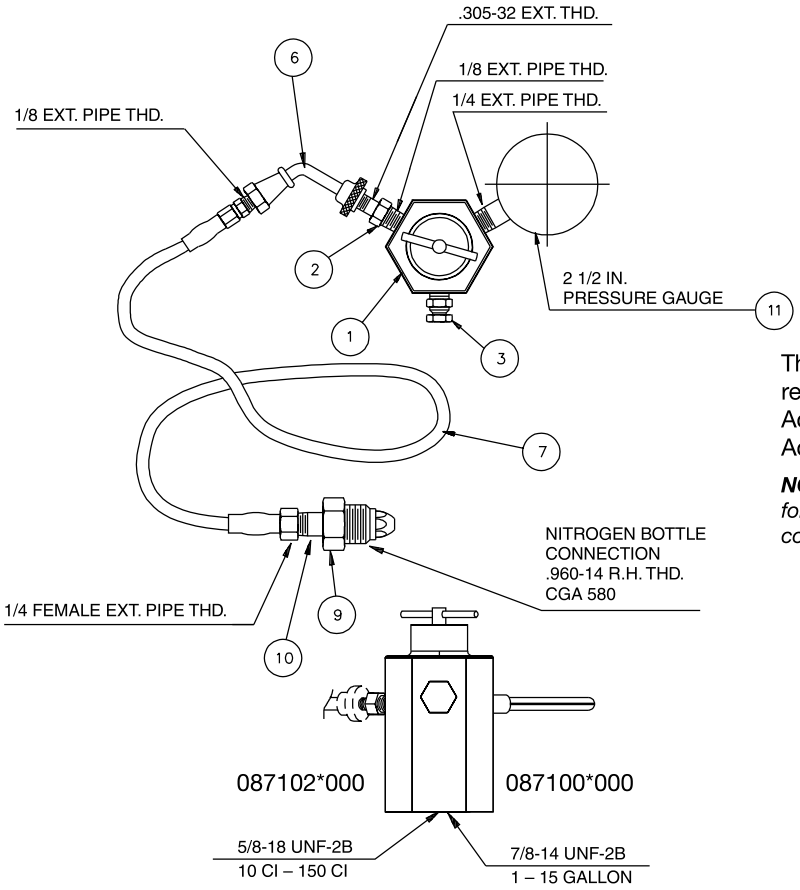

The following assemblies and parts are recommended for use on all 3000 PSI Bladder Accumulators. Cannot be used with Piston Accumulators.

NOTE: *These assemblies are not recommended for continuous monitoring of gas precharge. For continuous monitoring, see Gauging Adapters.*

	Item	Part Number	Description
A	1-10	0871020000	Standard Assembly for 10 to 150 Cubic Inch with RH Nitrogen Bottle Connection, No Gauge
	1-11	0871021000	Standard Assembly for 10 to 150 Cubic Inch with RH Connection with 1000 PSI Gauge
	1-11	0871022000	Standard Assembly for 10 to 150 Cubic Inch with RH Connection with 2000 PSI Gauge
	1-11	0871023000	Standard Assembly for 10 to 150 Cubic Inch with RH Connection with 3000 PSI Gauge
	1S-5	0871030000	Gauging Assembly for 10 to 150 Cubic Inch (No Hose or Gauge)
B	1-10	0871000000	Standard Assembly for 1 to 15 Gallon with RH Nitrogen Bottle Connection, No Gauge
	1-11	0871001000	Standard Assembly for 1 to 15 Gallon with RH Connection with 1000 PSI Gauge
	1-11	0871002000	Standard Assembly for 1 to 15 Gallon with RH Connection with 2000 PSI Gauge
	1-11	0871003000	Standard Assembly for 1 to 15 Gallon with RH Connection with 3000 PSI Gauge
	1-5	0871010000	Gauging Assembly for 1to 15 Gallon (No Hose or Gauge)
	6-10	1457810000	Hose Assembly with RH Connection
	2	5420920000	Gas Valve with 1/8" NPT
	3	0832140000	Bleeder Valve
	6*	5420860000	Hose Coupling with 0.305-32 Female Thread Connection
	7	0870520000	Charging Hose
	9	6661250000	Nitrogen Bottle Nut with RH Connection (CGA 580)
	10	6661240000	Nitrogen Bottle Nipple (CGA 580)
	11	See Gauges	2.5" Pressure Gauge
	*	8702770000	Gasket for 5420860000 (6)
		1353290000	Case with Insert for Complete Charging and Gauging Assembly

4000 & 5000 PSI Piston and Bladder Accumulators

The following assemblies and parts are recommended for use on all 5000 PSI Piston Accumulators and all 5000 PSI BladderAccumulators. 5000 PSI Top Repairable Accumulators require a Gas Valve Extension.

***NOTE**: Can be used on all accumulators with a gas precharge less than 5000 PSI. Consult factory for further information.*

***NOTE:** These assemblies are not recommended for continuous monitoring of gas precharge.*

For continuous monitoring, see Gauging Adapters.

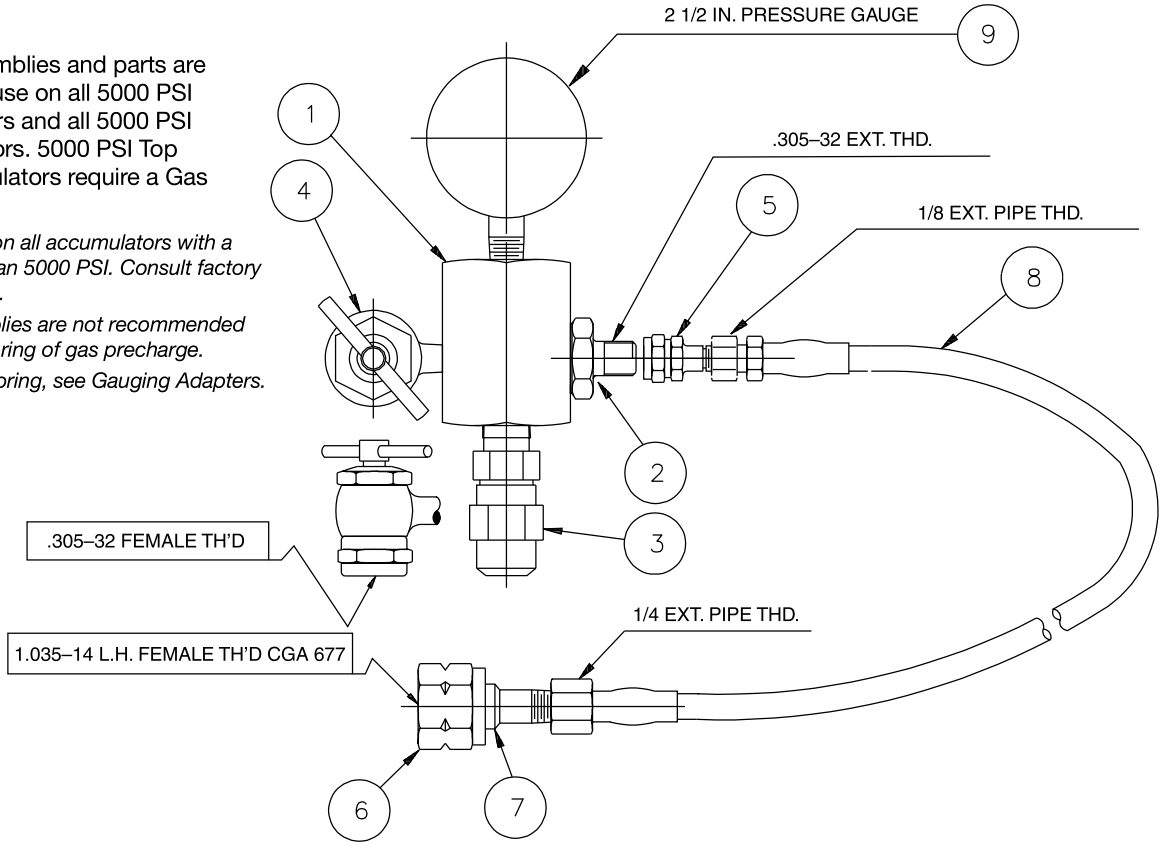

Item	Part Number	Description
1-8	8708160000	Standard Assembly with Left Hand (LH) Connection, No Gauge
1-9	8708165000	Standard Assembly LH Connection with 5000 PSI Gauge
1-9	8708166000	Standard Assembly LH Connection with 6000 PSI Gauge
1-4	8713720000	Gauging Assembly (No Hose or Gauge)
5-8	8712640000	Hose Assembly with LH Connection
1	8708460000	Adapter Cross
2	L07688000K	Gas Valve Assembly
3	8708140000	Bleed Valve
4	8708150000	Gas Chuck
5	0854210000	Valve Connector
6	0854220000	Nitrogen Bottle Nut with LH Connection
7	0854250000	Gas Tank Nipple (CGA 677)
8	0854150000	Charging Hose (10 ft.)
9	See Gauges	2.5" Pressure Gauge

Diaphragm with M28 Gas Valve

The following assemblies and parts are recommended for use on all Diaphragm Accumulators with M28 Gas Valve.

NOTE: *Can be used on all diaphragm accumulators with a gas precharge less than 5000 PSI. Consult factory for further information.*

NOTE: *These assemblies are not recommended for continuous monitoring of gas precharge. For continuous monitoring, see Gauging Adapters.*

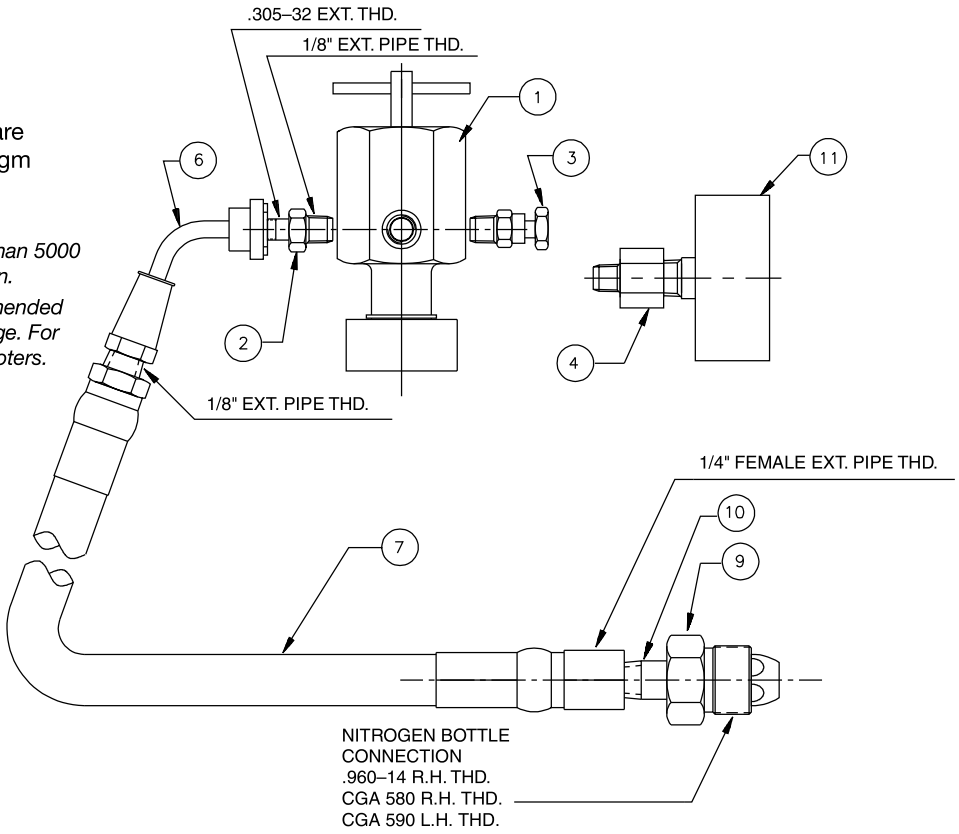

Item	Part Number	Description
1-10	1486750000	Standard Assembly with Right Hand (RH) Nitrogen Bottle Connection, No Gauge
1-11	1486751000	Standard Assembly RH Connection with 1000 PSI Gauge
1-11	1486752000	Standard Assembly RH Connection with 2000 PSI Gauge
1-11	1486753000	Standard Assembly RH Connection with 3000 PSI Gauge
1-11	1456755000	Standard Assembly RH Connection with 5000 PSI Gauge
1-10L	8700430000	Optional Assembly with Left Hand (LH) Nitrogen Bottle Connection, No Gauge
1-4	8702780000	Gauging Assembly (No Hose or Gauge)
6-10	1457810000	Hose Assembly with RH Connection
6-10L	1457820000	Hose Assembly with LH Connection
1		
2	5420920000	Gas Valve with 1/8" NPT
3	0832140000	Bleeder Valve
4	0873930000	Reducer – 1/4 x 1/8
6*	5420860000	Swivel Connector with Female Thread Connection
7	0870520000	Charging Hose
9	6661250000	Nitrogen Bottle Nut with RH Connection (CGA 580)
9L	6661260000	Nitrogen Bottle Nut with LH Connection (CGA 590)
10	6661240000	Nitrogen Bottle Nipple
11	See Gauges	2.5" Pressure Gauge
*	8702770000	Gasket for 5420860000 (6)
	1353290000	Case with Insert for Complete Charging and Gauging Assembly

Gauging Assemblies

Gauging Assembly consists of adapter incorporating gas valve, bleeder valve and gas chuck (less gauge).

3000 PSI			
Part Number (Assembly only)	**Piston Styles**	**Bladder Styles**	**Diaphragm Styles**
085122 0000	All	All	w/Cored valve
087101 0000	—	1-15 gal.	—
087103 0000	—	10-150 CI	—
4000/5000 PSI			
871372 0000	All	All	—

087101 0000

871372 0000

085122 0000

087103 0000

Gauging Adapters (Fixed Mount)

For continuous monitoring of gas precharge. Order gauge separately.

Part Number	Description
086213 0000	For 10-150 CI Bladder Accumulators (3000 PSI only) – includes gas valve
085057 0000	For 1 Gal. and above bladder and all piston accumulators (3000 - 5000 PSI)

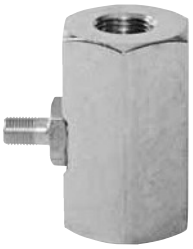
086213 0000

085057 0000

Unloading Valve

Unloading valves provide cost effective safety for your hydraulics by relieving hydraulic pressure when the system is de-energized. Valves conform to OSHA Rule 29CFR1910.147 to enhance safe system operation. Needle valve allows for manual accumulator bleed-down.

How to Order Unloading Valves

DV Series unloading valves can be specified by using the symbols in the chart below to develop a model number. Select only those symbols that represent the features desired, and place them in the sequence indicated by the example at the top of the chart.

Features

- Lightweight aluminum housing
- 2-way normally open solenoid
- 3000 PSI operating pressure
- Encapsulated 17W Solenoid
- Four standard voltage and connection options
- Fluorocarbon seals standard
- Small compact manifold design
- Leakproof SAE ports standard
- Needle valve override
- 10 GPM flow rate @ 3000 PSI
- 8 GPM @ 2000 PSI average

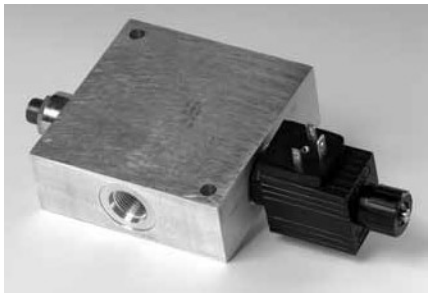

Accessories

Series	Size	Coil Voltage	Coil Connection	Ports
DV	10	A	D	C

DV Accumulator Unloading Valve

A 120/110 VAC, 60/50 Hz
B 240/220 VAC, 60/50 Hz
C 12 VDC
D 24 VDC

C 1/2 NPTF Conduit Connector with 24" Class H Wires
D DIN 43650 (Hirschmann Plug)
P SAE 18-0.25 SAE Double Spade (DC Only)
W Double Wire 24" Class H (DC Only)

C SAE #8 Accumulator and Tank Ports, SAE #5 Test Port

Accumulator Repair Tools

1. Bladder Pull Rods — (Bladder Type Accumulator) Pull rods are available in different lengths for different size accumulators. The pull rods attach to the gas valve of the bladder for ease of assembly into shell during reassembly.

2. Core Tool — The core tool is used to remove and reinstall the valve core. It is also used to ream valve seat and repair threads.

3. Spanner Wrench — Fits all standard size bladder accumulators. Used to remove hydraulic poppet assembly from accumulator shell.

Description	Part No
Pull Rod (1 Qt.-21/ 2 Gal.)	085109 0250
Pull Rod (5 Gal.)	085109 0500
Pull Rod (10-11 Gal.)	085109 1000
Pull Rod (15 Gal.)	085109 1500
Core Repair Tool	582441 0000
Core Installation Tool	300987
Spanner Wrench	085110 0000

Port Adapters

SAE to SAE Port Adapters	
Part Number	**Description**
562684000	24 SAE to #20 SAE
562685000	24 SAE to #16 SAE
562686000	24 SAE to #12 SAE
562687000	20 SAE to #16 SAE
562688000	20 SAE to #12 SAE
562689000	20 SAE to #10 SAE
086473000	16 SAE to #12 SAE
562690000	12 SAE to #10 SAE
562691000	12 SAE to #8 SAE
572086000	32 SAE to #24 SA
572087000	32 SAE to #20 SAE
572088000	32 SAE to #16 SAE
SAE to NPT Port Adapters	
Part Number	**Description**
562681000	24 SAE to 1-1/2" NPT
562682000	20 SAE to 1-1/4" NPT
562683000	12 SAE to 3/4" NPT
572089000	32 SAE to 2" NPT
6560070001	#12 SAE to 1/2" NPT
6560070002	#20 SAE to 1" NPT

"U" Bolts for Piston & Bladder-Type Accumulators

Accumulator Models (2000 / 3000 PSI)		Part No. and Dimensions							
Piston Bore	**Bladder Size**	**"U" Bolt Part No.**	**A**	**B**	**C**	**D**	**E**	**Thd.**	**Wt. Lbs.**
A2	—	0854370000	0.250	2.438	2.688	2.688	1.750	1/4-20	0.20
A3	1 Pint	0862090000	0.500	3.688	4.063	3.625	2.000	3/8-16	0.90
—	1 Quart	0854380000	0.500	4.625	5.125	4.500	3.000	1/2-13	1.20
A4	—	0864960000	0.500	5.000	5.500	4.500	3.000	1/2-13	1.30
—	1 Gallon	0854390000	0.625	6.750	7.375	6.125	3.750	5/8-11	2.40
A6	—	0864970000	0.625	7.125	7.750	6.125	3.750	5/8-11	2.50
A7	—	0854400000	0.625	8.250	8.875	7.000	3.750	5/8-11	3.00
—	2.5 to 15	0853360000	0.625	9.000	9.625	7.125	3.750	5/8-11	3.00
A9	—	0854410000	0.750	11.250	12.000	9.500	4.500	3/4-10	6.00
A12 (2K)	—	0854420000	0.875	14.125	15.000	10.250	4.250	7/8-9	8.20
—	2.5 to 15*	0865020000	0.625	9.750	10.375	7.250	3.750	5/8-11	3.50
A12 (3K)	—	0865610000	0.875	14.500	15.375	10.625	4.250	7/8-9	8.30

NOTE: *"U" Bolts should never be mounted more than 1 inch from end of accumulator (piston type).*

Bladder-Type Accumulator

Bladder-type accumulators should be mounted vertically with the hydraulic port down.

CAUTION: Bladder-type accumulators should never be mounted more than 25° angle from the vertical.

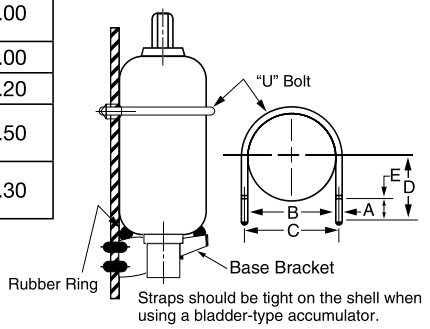

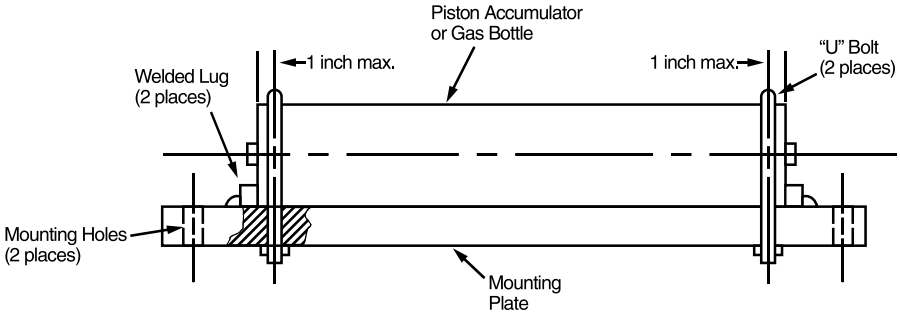

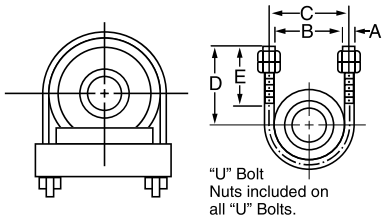

Base Bracket Assembly for Bladder Accumulators

Accumulator Models	Part Number and Dimensions									
Bladder Size	**Base Bracket Assembly Part No. (included rubber rings)**	**A**	**B**	**C**	**D**	**E**	**F**	**G**	**H**	**Wt. Lbs.**
1 Gal. (3K)	1449100000	10.3	7.87	3.62	4.75	8.87	3.85	1.58	0.65 x .87	5
2½ -15 Gal. (3K)	1448720000	10.3	7.87	4.84	6.75	8.87	3.85	1.58	0.65 x .87	5
25-40 Gal. (3K)	1480020000	15.3	10.6	7.68	8.18	15.3	9.40	4.18	0.87 x 1.06	10
2½ -15 Gal. (5K)	1481410000	10.3	7.87	5.35	6.75	8.87	3.85	1.58	0.65 x .87	5

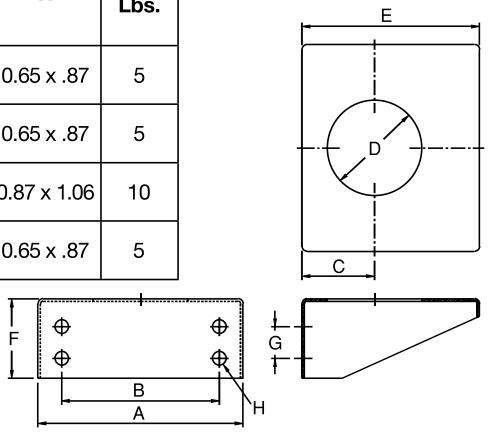

Clamp Brackets for Bladder-Type Accumulators

Bladder Size	Clamp Part No.	Dimensions							
		A	B	C Max.	D Max.	E	F	G	Wt. Lbs.
1 Qt., 150 C.I. (Figure A)	1466230000	4.5	3.9	5.5	6.3	2.6	.35 x .51	1.2	1.8
1 Gal. (Figure A)	1449080000	6.8	6.3	7.6	8.5	3.6	.35 x .51	1.2	2.7
2½ -15 Gal. (3K) (Figure B)	1449070000	9.0	8.5	10.0	11.7	4.8	.50 x .75	1.2	4.2
2½ -15 Gal. (5K) (Figure B)	1349200000	9.5	8.5	10.5	12.0	5.4	.50 x .75	1.2	4.5

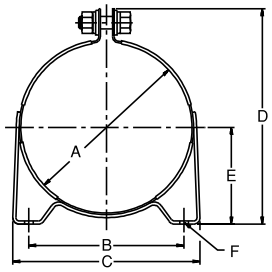

Figure A

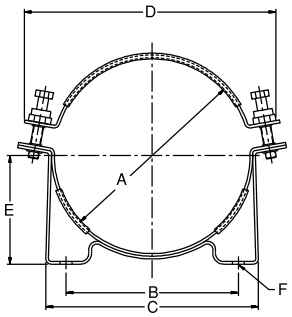

Figure B

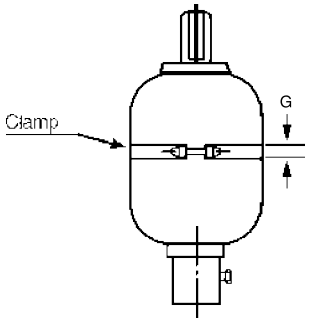

Clamp Brackets for Diaphragm and Small Piston and Bladder Accumulators

Part No.	Dimensions					Accumulator Style/Size		
	A	B	C	D	H	Diaphragm liters/cu in	Piston bore/series	Bladder liters/cu in
8700110238	4.25	3.35	4.29	2.25 / 2.41	1.58	—	2" / 3K	0.16 / 10
8700110252	4.25	3.35	4.42	2.62 / 2.82	1.64	0.075 / 5	2" / 4-5K	—
8700110291	4.25	3.35	4.84	2.81 / 3.01	1.86	0.16 / 10	—	—
8700110358	5.00	3.94	5.62	3.35 / 3.62	2.28	0.35 / 20	3" / 3-4K	0.50 / 30
8700110413	5.25	4.33	6.06	4.04 / 4.22	2.45	0.50 / 30	3" / 5K	—
8700110476	5.25	4.33	6.71	4.55 / 4.90	2.77	0.75 / 45	4" / 3K	1-3 / 60-150
8700110500	5.25	4.33	6.71	4.82 / 5.15	2.95	0.75 / 45	4" / 4K	—
8700110535	5.75	4.92	7.43	5.32 / 5.50	3.21	1.0 / 60	—	—
8700110598	7.00	5.98	7.96	5.85 / 6.15	3.40	—	—	—
8700110630	7.00	5.98	8.29	6.15 / 6.37	3.57	1.4 / 85 & 2.0 / 120	—	—
1449080000	7.60	6.30	8.50	6.80	3.60	2.8 / 170	—	—

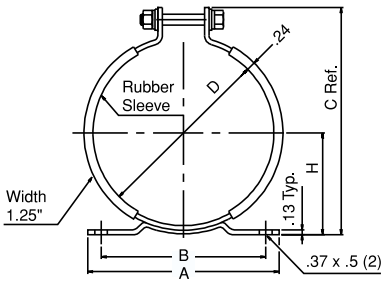

Clamp Brackets for Series 4000 & Series 5000 Piston Accumulators

Piston Bore Size	Series 4000 Part Number	Series 5000 Part Number
2"	8700110252	8700110252
3"	8700110358	8700110413
4"	8700110535	87001100535
6"	—	—
7"	N/A	–
9"	N/A	–

Safety Fuse Options (F)

Safety Fuses are used as a safety device on accumulators and gas bottles to prevent over-pressurization of gas due to external heat or hydraulic pressure (set at 140% of maximum system pressure to avoid rupture disk fatigue and premature failure). The rupture disks are calibrated to rupture at a predetermined pressure. Safety fuses are available on most sizes of piston and bladder accumulators and gas bottles. Safety fuses can be installed on all piston accumulators by using the “Fuse Adapter” as shown to the right. 4" bore units and above can be equipped with a fuse port machined in the gas cap by specifying the “Safety Fuse Option” (F) at the time of order in the model code, see “How to Order.” The safety fuse assembly and/or fuse adapter must be ordered separately.

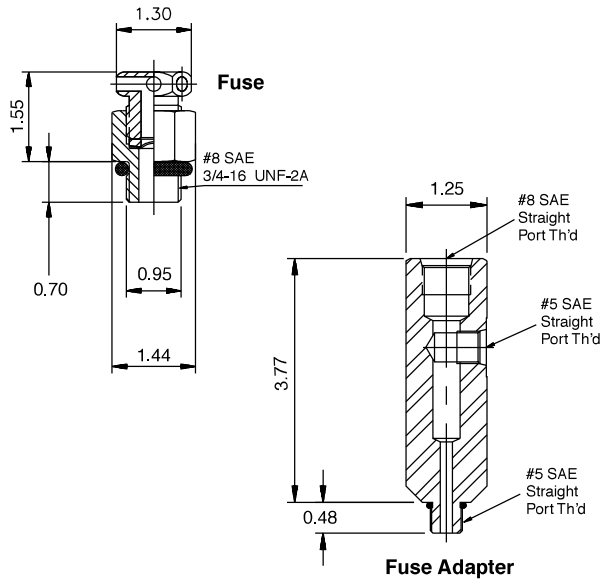

Description	Part Number
Safety Fuse Assembly[1]	086471xxxx
Replacement Rupture Disks	756003xxxx
Fuse Adapter	1468970002

[1] *Assembly includes housing and rupture disk, xxxx = pressure setting in 100 PSI increments, i.e., for an assembly with a 2000 PSI setting, order P/N 0864712000.*

Note: *ASME and CRN units available upon request.*

Safety Fuse Housing

Safety Fuse/Burst Disk

Safety Fuse Name Plate

Part Number	Description
864710000	Safety Fuse Housing SAE #8
7560010000	Safety Fuse Housing 1/2" NPT
7560033000	3000 PSI Safety Disk
7560034500	4500 PSI Safety Disk
7560035000	5000 PSI Safety Disk
1468970002	Safety Fuse Adaptor SAE #5 Male,SAE #8 Fuse Housing
1468970001	Safety Fuse Adaptor SAE #5 Male, 1/2” NPT Fuse Housing

Note: *Other pressures offered. Consult factory.*

Notes

Parker Hannifin
Global Accumulator Division
United States

KleenVent KV Series

Hydraulic Reservoir Isolators

GREER BLADDER PRODUCTS

IN THIS SECTION

Introduction & Specifications 109
Capacities, Dimensions & Options 111
Sizing & Ordering Information 112

Features

- Capacities from 2-1/2 to 80 Gallons
- Five Bladder Polymers for a Wide Range of Fluids and Temperatures
- Polyglass and Steel Shells
- Optional Pressure/Vacuum Breaker

Fluid contamination can lead to high maintenance costs and downtime in hydraulic systems. KleenVent reservoir isolators provide protection against the ingestion of airborne contaminants – dust, chemicals, and water vapor – into your hydraulic system though the reservoirs breather-vent. By using an elastomer bladder as a lung, the changes in gas volume in a hydraulic system's reservoir can be trapped and prevented from mixing with the outside atmosphere. And unlike conventional breathervent filters, KleenVent reservoir isolators provide a positive separation without the possibility of clogging or need for maintenance.

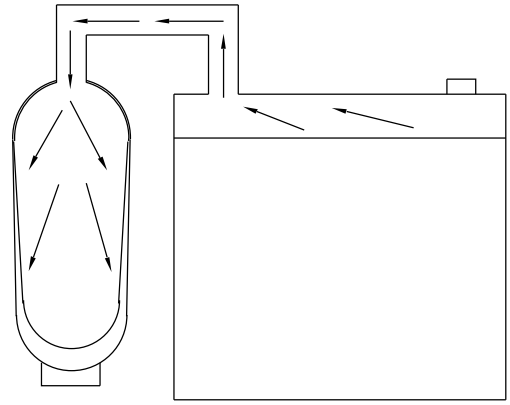

ATMOSPHERIC PRESSURE RESERVOIR HIGH LEVEL

Why Use KleenVent Reservoir Isolators?

- reduce hydraulic system maintenance costs
- reduce hydraulic system downtime
- reduce waste disposal costs
- extends filter life
- low maintenance solution
- range of compounds for a variety of fluids

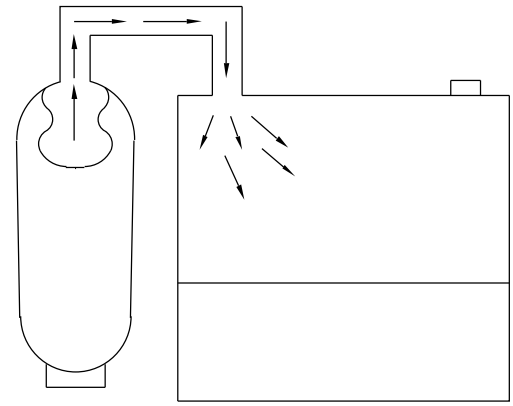

ATMOSPHERIC PRESSURE RESERVOIR LOW LEVEL

Greer KleenVent Reservoir Isolators – The Right Choice For . . .

- Steel/Primary Metal Mills
- Foundries
- Pulp and Paper Mills
- Power Generation Plants
- Automotive Plants
- Any Highly Contaminated or Humid Environment

Specifications

Materials

- Shell – polyglass or steel
- Ports – steel
- Bladders – choice of five compounds – Nitrile, Hydrin, Butyl, EPR, or Fluorocarbon, see chart below.

Pressure Ratings – Atmospheric pressure.

Fluids – Greer's KleenVent reservoir isolators are compatible with virtually any industrial fluid with the proper bladder selection. See chart below or consult factory.

Options – Pressure/Vacuum Breakers for safety and reservoir protection, see next page.

Seal Code	Polymer	**Recommended Operating Temperature Range	Maximum Temperature with Reduced Life	General Application & Compatibility*
01	Buna-Nitrile	-20°F to 200°F -29°C to 93°C	225°F 107°C	Standard Compound – Compatible with most mineral oil-based fluids
04	Hydrin (Lo-Temp.)	-40°F to 225°F -40°C to 107°C	250°F 121°C	Compatible with most mineral oil-based fluids with enhanced low temperature performance
06	Butyl	-40°F to 200°F -40°C to 93°C	300°F 149°C	Compatible with most phosphate ester fluids and some synthetic fluids
08	Ethylene Propylene	-40°F to 200°F -40°C to 93°C	300°F 149°C	Compatible with some synthetic fluids and water
28	Fluorocarbon Elastomer	-10°F to 250°F -23°C to 121°C	400°F 204°C	Compatible with most mineral oil-based fluids at higher temperatures and some exotic fluids

** Consult your local distributor or the factory for fluid compatibility information.*
*** Temperature ranges may vary depending upon the fluid used in the hydraulic system.*

Models, Capacities and Dimensions

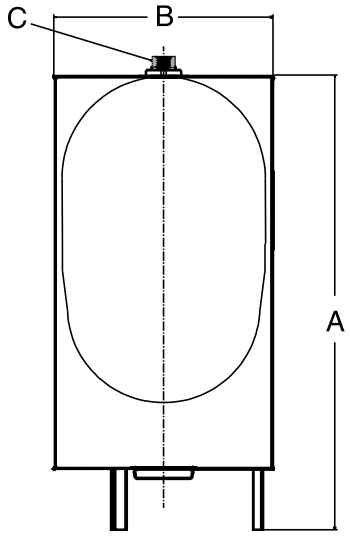

Steel KleenVent

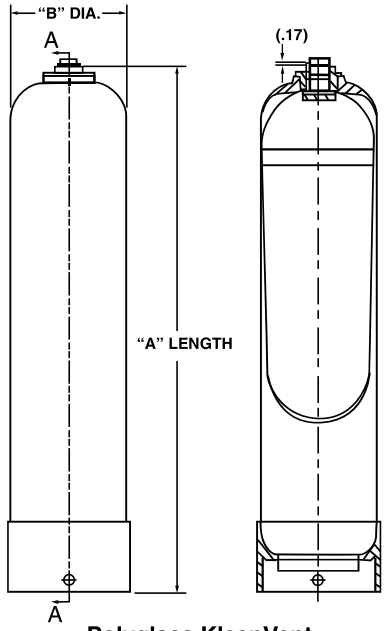

Polyglass KleenVent

Model	Nominal Capacity Gallons (Liters)	Actual Internal Volume (bladder) Gallons (Liters)	Shell Material	A in. (mm)	B in. (mm)	C Port Size Thread Size	Weight lbs. (Kg)
KV02F0T01A2	2.5 (9.5)	1.70 (6.43)	Polyglass	19.8 (502)	8.00 (203)	SAE #16 1-5/16 - 12	14 (6.4)
KV05F0T01A2	5 (18.9)	4.10 (15.52)	Polyglass	36.6 (929)	8.00 (203)	SAE #16 1-5/16 - 12	22 (10)
KV10F0T01A2	10 (37.8)	7.70 (29.14)	Polyglass	49.2 (1249)	9.00 (228)	SAE #16 1-5/16 -12	38 (17)
KV20F0T01A2	20 (75.6)	16.20 (61.32)	Polyglass	49.8 (1264)	12 (305)	SAE #24 1-7/8 - 12	60 (27)
KV20M0T01A1	20 (75.6)	16.20 (61.32)	Steel	54.18 (1376)	12 (305)	SAE #24 1-7/8 - 12	80 (36)
KV40M0T01A1	40 (151)	30.00 (113.55)	Steel	35.00 (889)	22 (562)	SAE #24 1-7/8 - 12	115 (52)
KV60M0T01A1	60 (227)	45.00 (170.33)	Steel	47.50 (1206)	22 (562)	SAE #24 1-7/8 - 12	150 (68)
KV80M0T01A1	80 (302)	60.00 (227.10)	Steel	60.12 (1527)	22 (562)	SAE #24 1-7/8 - 12	190 (86)

Optional Pressure/Vacuum Breaker

Greer recommends that every KleenVent installation be equipped with a Pressure/Vacuum Breaker to protect reservoir in the event of a sudden fluid loss or over-filling. Parker offers two types of optional pressure/vacuum breakers, Type 1 that installs with a 1/2" male NPT, and Type 2 bayonet style that installs into your existing reservoirs fill-vent port.

Features & Specifications:

- Fixed pressure relief – 1 psid ± 0.5 PSI (0.07 bar ± 0.035 bar)
- Fixed vacuum relief – 0.15 psid ± 0.15 PSI (0.01 bar ± 0.01 bar)
- 10 micron filter – Type 1, reusable sintered bronze; Type 2, replaceable filter cartridge.

PN1486670000

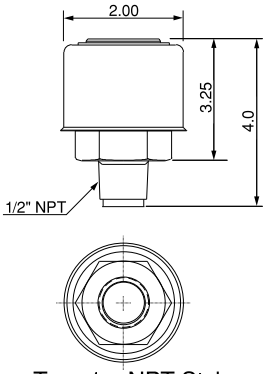

Type 1 – NPT Style

PN1486680000

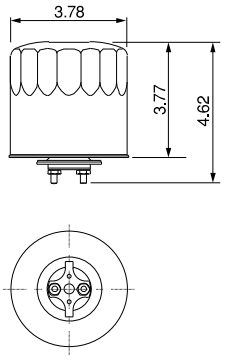

Type 2 – Bayonet Style

Kleen Vent

KleenVent Installation & Sizing Information

KleenVents should be installed when the reservoir is at its highest level. This will allow the bladder to deflate as the reservoir level drops. KleenVents should be installed in a vertical position for optimum performance. Multiple KleenVents should be installed in parallel when the required size exceeds 80 gallons. Always use “actual volumes” when sizing and select the next higher size when a capacity is required between size offerings.

Sizing a KleenVent on New and Existing Systems

On new systems, sum all single acting cylinder “differential” volumes (rod area x stroke) and all accumulator volumes in the system. Multiply this sum by 1.2 to find the KleenVent volume required. Select a KleenVent(s) with an actual capacity equal to or greater than the sum calculated. On existing systems, if the cylinder and accumulator sizes are known, the above method may be used. If not, calculate the total change in fluid volume in the system during operation by measuring the high and low fluid level of the reservoir. Multiply the difference in fluid levels by the width and length of the reservoir to calculate the total fluid volume change. Select a KleenVent(s) with an actual capacity equal to or greater than the sum calculated. Feel free to contact the factory for sizing assistance.

Installation Kits . . . Add Without Interruption

Add closed-loop protection without shutting down, purging the reservoir, contaminating existing fluids or losing time.

KleenVent Installation Kits

Part Number	Description
8708690006	Installation Kit with 6' hose
8708690009	Installation Kit with 9' hose
8708690012	Installation Kit with 12' hose
8708690018	Installation Kit with 18' hose
8708690024	Installation Kit with 24' hose

How to Order KleenVents

KV Series KleenVents can be specified by using the symbols in the chart below to develop a model number. Select only those symbols that represent the features desired, and place them in the sequence indicated by the example at the top of the chart.

Series	Size	Construction	Pressure	Port	Bladder	Variation	Code
KV	20	M	0	T	01	A	1

KV KleenVent

02 2½ gallon
05 5 gallon
10 10 gallon
20 20 gallon
40 40 gallon
60 60 gallon
80 80 gallon

F Polyglass (2½ - 20 gal.)
M Steel (20 - 80 gal.)

0 Atmospheric

T SAE

01 Buna-Nitrile
04 Hydrin
06 Butyl
08 EPR
28 Fluorocarbon

A Standard

1 Standard (metal) 20 - 80 gallon
2 Standard Polyglass 2½ - 20 gallon

SurgeKushons

General Oil Service ■ Water & Chemical Service
■ Slurry Service

GREER
BLADDER PRODUCTS

IN THIS SECTION

Introduction & Applications 113
Specifications 115
Design Features & Benefits 116

Models, Capacities & Dimensions

General Oil & Slurry Service 117
Water & Chemical Service 118
Options & Ordering Information 119

Features

- Operating Pressures to 500 PSI
- Eight Different Capacities – from 2-1/2 to 120 gallons
- The Highest Quality In-House Manufactured Bladders
- ASME Certification Standard
- Chemical and Water Service Optional
- Four Bladder Compounds to Suit a Variety of Fluids and Temperatures

In high volume fluid handling systems, shocks are experienced when valves open or close or when pumps are started or shut down. SurgeKushons are essentially low pressure bladder accumulators designed to take these shocks out of high-flow fluid handling systems. Applications for SurgeKushons include water sprinkling systems, water handling systems, refueling systems, and chemical and process plants.

Fuel loading absorbs shock from pump startup and stopping

Protecting sensitive meters and small diameter piping from valve closure on fueling trucks

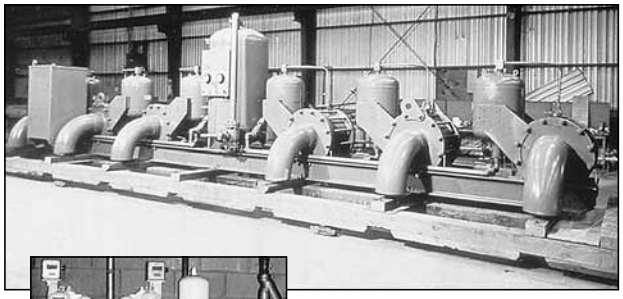

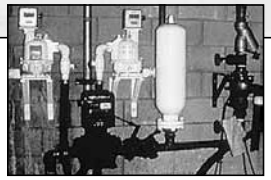

Protection from large valve closure shocks

Refineries — Shock from pump starting and stopping

Liquid bulk handling absorbs surges and shocks from fluids in motion

Aircraft protection from valve closure shocks during refueling.

When a valve in a high volume fluid handling system opens or closes or a pump starts or stops, there can be pressure spikes generated that are four times greater than the system's design pressure. This shock can burst pipes, shatter or loosen fittings, disable pumps and knock out instrumentation. Greer's SurgeKushons are accumulators designed to protect fluid handling systems from surge and water hammer damage by absorbing the kinetic energy before it can cause serious damage.

Underground or overhead water or fluid systems can be made safer and more trouble-free with the proper SurgeKushon applications. Fire protection systems using sprinklers should be secured with SurgeKushons. Airport refueling facilities, petro-chemical plants, bulk handling systems, and refineries cannot afford surge-ruptured lines and the accompanying spills.

SurgeKushon Protection Pays...

- control surges and water hammer
- help save lives and property
- get immediate pay-back from reduced maintenance and damage
- save pump energy by continually holding pressure
- get longer life from equipment
- overall... the whole system works better

Greer SurgeKushons… Your #1 Choice for Surge Protection!

Greer SurgeKushons are made by the leading manufacturer of bladder accumulators in North America. The broad SurgeKushon offering includes:

- 275 & 500 PSI Rated General Service
- 275 & 500 PSI Rated Slurry Service
- Water & Chemical Service Option
- Stainless Steel Construction Available - Consult Factory

Virtually all of the components used in the construction of the SurgeKushons including the shells and the bladders themselves, the heart of any SurgeKushon, are manufactured inhouse. All processes are internally controlled to the highest standards of quality and consistency.

Also, we offer application assistance and will help to design the proper SurgeKushon arrangement to fit your systems requirements including sizing and placement.

Specifications

Materials

- Shell – carbon steel to ASME material specifications
- Screens – stainless steel
- Flanges – carbon steel forgings to ANSI material specification
- Gas Valve Protector – steel
- Gas Valve Stem – steel
- Bladders – various polymers, see Standard and Optional Bladders in this section.

Maximum Flow Rates

Flange Size	Max. Recommended Flow*	
	GPM	LPM
3"	350	1325
3" Slurry	400	1514
4" & 6"	1000	3785
8" & 10"	1400	5300

***Note:** with fliud viscosity of 60-70 SSU*

Pressure Ratings – SurgeKushons are available in a variety of maximum operating pressures up to 500 PSI- all at minimum 4 to 1 design factors. See "Models, Capacities and Dimensions" pages for rated pressures.

Fluids – SurgeKushons are compatible with a wide variety of fluids. The standard accumulator may be used with petroleum based industrial or water-based flame resistant fluids. Bladders compatible with most industrial fluids can be furnished on special orders with temperature ranges from -40°F to 250°F (-40°C to 121°C).

Precharge – Units are shipped with a 25 PSI nitrogen precharge as standard. For other precharge pressures, specify at the time of order.

Available Options – options available on SurgeKushons include:

- Bladder Compounds (see Standard and Optional Bladders in this section)
- Water & Chemical Service (see Water & Chemical Service Option in this section)

Certifications – ASME (Section VIII, Div. 1) is available as standard on SurgeKushons.

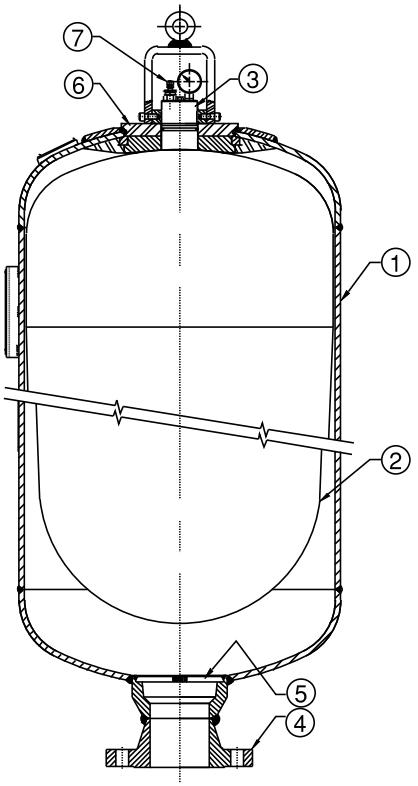

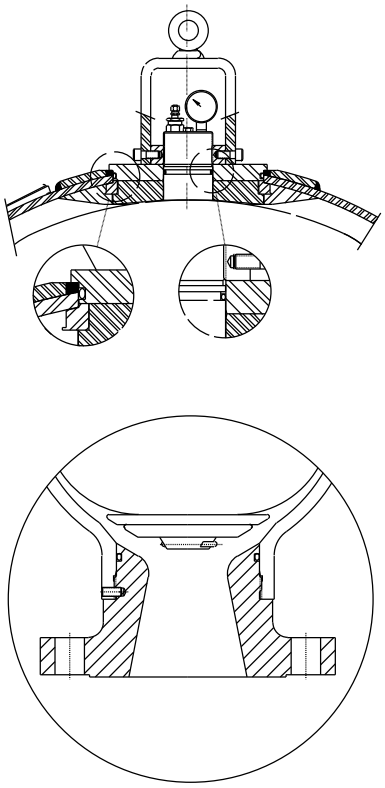

1 Shell

SurgeKushon shells are fabricated from carbon steel with minimum 4 to 1 design factors at normal operating pressures. SurgeKushon shells meet ASME material specifications as standard.

2 Bladder

The heart and soul of a SurgeKushon, bladders are manufactured in-house to control the material blending, molding, and critical seam assembly and curing processes. It is widely accepted that Greer bladders are the highest quality bladders in the industry. Bladders are offered in four different standard compounds to suit a variety of fluids and operating temperatures. Special compounds are available for unusual or severe applications.

3 Bladder Stems

All SurgeKushons are fitted as standard with two-piece bladder stems with replaceable gas valve cartridge for ease of serviceability. Also, the two-piece stem will accept high pressure high-flow gas valves and permanent mount gauge adapters.

4 Port Flanges

ANSI RF flanges, 150 and 300 lb., are supplied as standard. Sizes range from 3" thru 10" with special sizes available (consult factory).

5 Screens

SurgeKushons are equipped as standard with stainless steel screens to prevent bladder extrusion and for corrosion resistance.

6 Top Repairable

25 gallon and larger units are supplied as top repairable. The top repairable design permits easy checking and maintenance of the bladder without removing the accumulator from the service line, saving time and money.

7 Gas Valve

All accumulators are fitted with a gas valve for ease of gas precharging. 2-1/2 thru 10 gallon units are equipped with a cored gas valve cartridge (ISO-4570-8VI) for ease of maintenance. 25 gallon and larger units are equipped with a poppet-type high-flow gas valve. For safety, the gas valve vents if unscrewed.

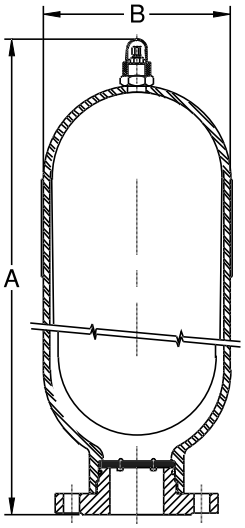

ASME Certified General Service SurgeKushons

Nominal Size	Bladder Code	Part Number	SurgeKushon Repair Kit	SurgeKushon Pressure Rating	A Inch (mm)	B Inch (mm)	RF Flange	Weight lbs. (Kg)
2-1/2 gallon (9.5 liters)	-01 Slurry	SK02S3FA01A1	703184	275 PSI (19 Bar)	19.25 (489)	8.60 (218)	3", 150#	63 (29)
	-01	SK02A3FA01A1	702634					
	-04	SK02A3FA04A1	704330					
	-08	SK02A3FA08A1	702636					
	-28	SK02A3FA28A1	702635					
5 gallon (19 liters)	-01 Slurry	SK05S3FA01A1	703191	275 PSI (19 Bar)	29.50 (749)	8.60 (218)	3", 150#	89 (40)
	-01	SK05A3FA01A1	702637					
	-04	SK05A3FA04A1	704331					
	-08	SK05A3FA08A1	702639					
	-28	SK05A3FA28A1	702638					
10 gallon (38 liters)	-01 Slurry	SK10S3FB01A1	703198	275 PSI (19 Bar)	50.63 (1286)	8.60 (218)	3", 150# (Slurry, 4", 150#)	137 (62)
	-01	SK10A3FA01A1	702640					
	-04	SK10A3FA04A1	704332					
	-08	SK10A3FA08A1	702642					
	-28	SK10A3FA28A1	702641					
25 gallons (95 liters)	-01	SK25A5PB01A1	702615	500 PSI (34 Bar)	35.69 (907)	22.00 (559)	4", 300#	320 (145)
	-04	SK25A5PB04A1	704333					
	-08	SK25A5PB08A1	702617					
	-28	SK25A5PB28A1	702616					
40 gallons (151 liters)	-01	SK40A5PB01A1	702621	500 PSI (34 Bar)	43.44 (1103)	22.00 (559)	4", 300#	368 (167)
	-04	SK40A5PB04A1	704334					
	-08	SK40A5PB08A1	702623					
	-28	SK40A5PB28A1	702622					
80 gallons (303 liters)	-01	SK80A5PB01A1	702626	500 PSI (34 Bar)	64.44 (1637)	22.00 (559)	4", 300#	660 (300)
	-04	SK80A5PB04A1	704335					
	-08	SK80A5PB08A1	702627					
	-28	SK80A5PB28A1						
100 gallons (379 liters)	-01	SK100A5PB01A1	702630	500 PSI (34 Bar)	84.44 (2145)	22.00 (559)	4", 300#	885 (402)
	-04	SK100A5PB04A1	704336					
	-08	SK100A5PB08A1	702631					
	-28	SK100A5PB28A1						
120 gallons (454 liters)	-01	SK120A5PB01A1	702643	500 PSI (34 Bar)	101.38 (2575)	22.00 (559)	4", 300#	1010 (459)
	-04	SK120A5PB04A1	704337					
	-08	SK120A5PB08A1	702644					
	-28	SK120A5PB28A1						

Note:

Bladder Codes: -01 = Buna-Nitrile, -04 = Hydrin, -08 = EPR, & -28 = Fluorocarbon)

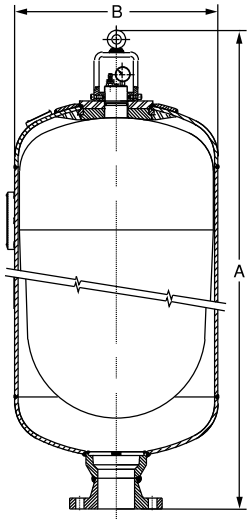

Water/Chemical Service SurgeKushons (All Bladders are Code -1 Nitrile)

Nominal Size	B	ANSI RF Flange Size	275 PSI Rated with 150# Flange					400 PSI Rated with 300# Flange				
	Inch (mm)		Model Number	A		Weight		Model Number	A		Weight	
				Inch	(mm)	lbs.	(Kg.)		Inch	(mm)	lbs.	(Kg.)
2-1/2 gallon (9.5 liters) RK #702634	8.60 (218)	3"	SK02W3FA01A1	16.94	(430)	63	(29)					
5 Gallon (19 liters) RK #702637	8.60 (218)	3"	SK05W3FA01A1	28.94	(735)	89	(40)					
10 Gallon (38 liters) RK #702640	8.60 (218)	3"	SK10W3FA01A1	50.63	(1286)	137	(62)					
25 gallon (95 liters) RK #702615	22.00 (559)	4"	SK25W3FB01A1	35.69	(907)	310	(141)	SK25W4PB01A1	35.69	(907)	320	(145)
		6"	SK25W3FC01A1	37.50	(953)	319	(145)	SK25W4PC01A1	38.00	(965)	338	(154)
		8"	SK25W3FD01A1	37.56	(954)	335	(152)	SK25W4PD01A1	37.94	(964)	362	(165)
		10"	SK25W3FE01A1	41.56	(1056)	347	(158)					
40 gallons (151 liters) RK #702621	22.00 (559)	4"	SK40W3FB01A1	43.44	(1103)	358	(163)	SK40W4PB01A1	43.44	(1103)	368	(167)
		6"	SK40W3FC01A1	45.25	(1149)	367	(167)	SK40W4PC01A1	45.75	(1162)	386	(175)
		8"	SK40W3FD01A1	45.31	(1151)	383	(174)	SK40W4PD01A1	45.69	(1161)	410	(186)
		10"	SK40W3FE01A1	49.31	(1252)	395	(180)					
80 Gallon (303 liters) RK #702626	22.00 (559)	4"	SK80W3FB01A1	64.44	(1637)	650	(295)	SK80W4PB01A1	64.44	(1637)	660	(300)
		6"	SK80W3FC01A1	66.25	(1683)	659	(300)	SK80W4PC01A1	66.75	(1695)	678	(308)
		8"	SK80W3FD01A1	66.31	(1684)	675	(307)	SK80W4PD01A1	66.69	(1694)	702	(319)
		10"	SK80W3FE01A1	70.31	(1786)	687	(312)					
100 Gallon (379 liters) RK #702630	22.00 (559)	4"	SK100W3FB01A1	84.88	(2156)	875	(398)	SK100W4PB01A1	84.44	(2145)	885	(402)
		6"	SK100W3FC01A1	86.69	(2202)	884	(402)	SK100W4PC01A1	87.19	(2215)	903	(410)
		8"	SK100W3FD01A1	86.75	(2203)	900	(409)	SK100W4PD01A1	87.13	(2213)	927	(421)
		10"	SK100W3FE01A1	90.75	(2305)	912	(415)					
120 Gallons (454 liters) RK #702643	22.00 (559)	4"	SK120W3FB01A1	101.38	(2575)	1000	(455)	SK120W4PB01A1	101.38	(2575)	1010	(459)
		6"	SK120W3FC01A1	103.19	(2621)	1009	(459)	SK120W4PC01A1	103.69	(2634)	1028	(467)
		8"	SK120W3FD01A1	103.25	(2623)	1025	(466)	SK120W4PD01A1	103.63	(2632)	1052	(478)
		10"	SK120W3FE01A1	107.25	(2724)	1037	(471)					

Note:

RK = Repair Kit

A variety of bladders are offered to suit a wide range of fluids temperature ranges, and the types of fluids that are generally and operating temperatures. The following table lists the compatible. optional bladders available, their recommended operating

Code	Polymer	**Recommended Operating Temperature Range	Maximum Temperature with Reduced Life	General Application & Compatibility*
01	Buna-Nitrile	-20°F to 165°F -10°C to 80°C	225°F 93°C	Greer's Standard Compound – Compatible with most mineral oil based fluids.
04	Hydrin (Lo-Temp)	-40°F to 160°F -40°C to 71°C	200°F 93°C	Compatible with most mineral oil based fluids with enhanced low temperature performance.
08	Ethylene Propylene	-40°F to 200°F -40°C to 93°C	300°F 149°C	Compatible with some synthetic fluids and water.
28	Flurocarbon Elastomer	-10°F to 250°F -23°C to 121°C	400°F 204°C	Compatible with most mineral oil based fluids at higher temperatures and some exotic fluids.

Note:

**Consult your local Greer distributor or the factory for fluid compatibility information.Temperature ranges may vary depending upon the fluid used in the hydraulic system.*

*** The temperatures listed indicate the operating temperature range of the seals, not the SurgeKushon. For the Minimum Design Metal Temperature (MDMT) of ASME certified SurgeKushons, please consult the factory.*

Bladder Kits

A full range of genuine Greer replacement bladder kits are available to bring your SurgeKushon back to original condition should replacement become necessary. All bladder kits include port o-ring and back-up seals and gas valves with secondary seals. (Consult factory for SurgeKushon repair kit numbers).

Water & Chemical Service Option

Standard SurgeKushons are manufactured from carbon steel and are intended for oil or non-corrosive fluid service. For water or corrosive fluid service, the Water & Chemical Service option should be specified. With this corrosive resistant option, all parts that come into contact with the system fluid are made from 300 series stainless steel or have a Skotchkote 134® coating.

How to Order SurgeKushons

SurgeKushons can be specified by using the symbols in the chart below to develop a model number. Select only those symbols that represent the features desired, and place them in the sequence indicated by the example at the top of the chart.

Series: **SK**
- SK Series SurgeKushons

Size: **10**

Code	Size
02	2-1/2 gal. (9-1/2 liters)
05	5 gal. (19 liters)
10	10 gal. (38 liters)
25	25 gal. (95 liters)
40	40 gal. (151 liters)
80	80 gal. (303 liters)
100	100 gal. (379 liters)
120	120 gal. (454 liters)

Construction: **A**
- **A** Std. Oil Service
- **W** Water & Chemical Service
- **S** Slurry Service[1]

[1] *Includes water service.*

Rated Pressure: **3**

Rated Pressure	
3	275 PSI (19.0 Bar)
5	500 PSI (35 Bar)

Port: **FA**

Port Flanges			
FA	3", 150#ANSI RF Flg.	PA	3", 300#ANSI RF Flg.
FB	4", 150#ANSI RF Flg.	PB	4", 300#ANSI RF Flg.
FC	6", 150#ANSI RF Flg.	PC	6", 300#ANSI RF Flg.
FD	8", 150#ANSI RF Flg.	PD	8", 300#ANSI RF Flg.
FE	10", 150#ANSI RF Flg.	XX	Special

Bladder Material: **01**
- **01** Buna-Nitrile
- **04** Hydrin
- **08** EPR
- **28** Fluorocarbon

Design Variation: **A**
- **A** Standard ASME Cert.
- **S** Special

Design Code: **1**
- **1** Standard
- ***** Special Design No. Assigned

SurgeKushons

Notes

Parker Hannifin
Global Accumulator Division
United States

Hydraulic Piston Accumulators

Maintenance Instructions

Installation

All accumulators shipped from the factory will be pre-charged to a nominal pressure in order to seat the piston on the hydraulic cap. In this case the precharge will not be listed on the label. However, in some cases they will be shipped with a nitrogen charge, the value of which will be marked on the label/ nameplate.

Keep the hydraulic port covered to keep out foreignmaterial until ready to make the hydraulic connections.

The accumulator can be mounted in any orientation. However, it should be rigidly mounted using any combination of the mounting holes provided at the hydraulic cap or proper clamps. The hydraulic circuit, which contains a connection to the accumulator should be designed so that it automatically discharges all hydraulic fluid from the accumulator when the equipment is turned off.

Parker Hannifin
Global Accumulator Division
United States

Installation

Most accumulators shipped from the factory will not be pre-charged. However, in some cases they will be shipped with some amount of nitrogen charge, the value of which will be stamped on the nameplate.

Keep the hydraulic port covered to keep out foreign material until ready to make the hydraulic connections.

The accumulator can be mounted in any orientation; vertically mounted with hydraulic port down is perferred. However, it should be rigidly mounted using any combination of the mounting holes provided at the hydraulic cap or proper clamps. The hydraulic circuit, which contains a connection to the accumulator should be designed so that it automatically discharges all hydraulic fluid from the accumulator when the equipment is turned off.

Example 1

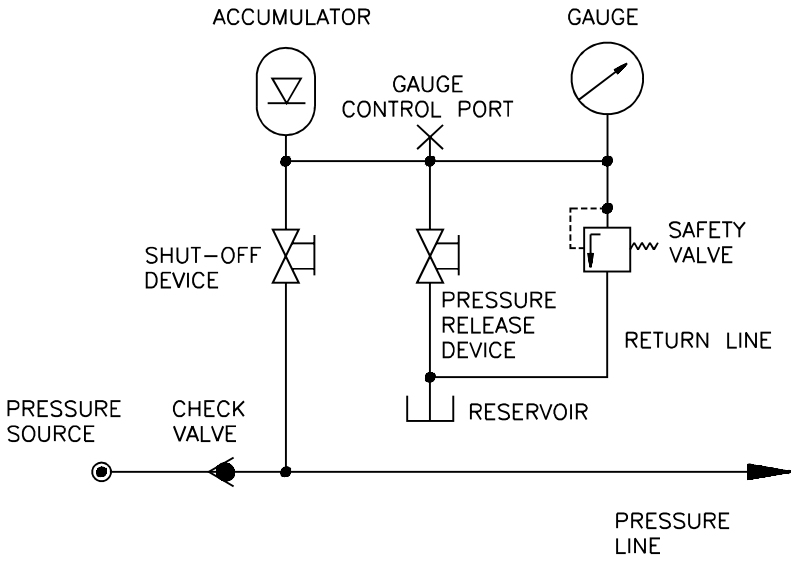

Basic safety equipment for a single accumulator with permanently connected safety valve and gauge, gauge control port, manually operated shut-off device, pressure release device and return line to the reservoir. Safety components may be connected by lines and/or installed in a safety block. The accumulator must always be protected with sufficient discharge capacity. If a check valve prevents flow back to the pressure source (pump), a shut-off device is not required for safety reasons but may be appropriate for service and maintenance.

Example 2

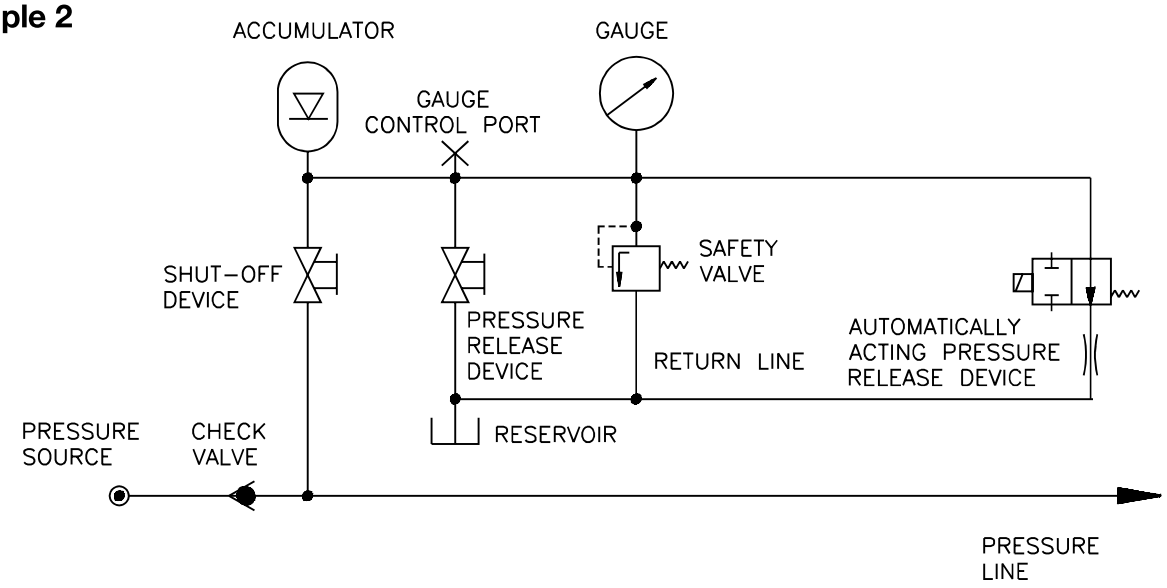

Configuration with additional pressure release device which opens automatically in the case of circuit break down.

Example 3

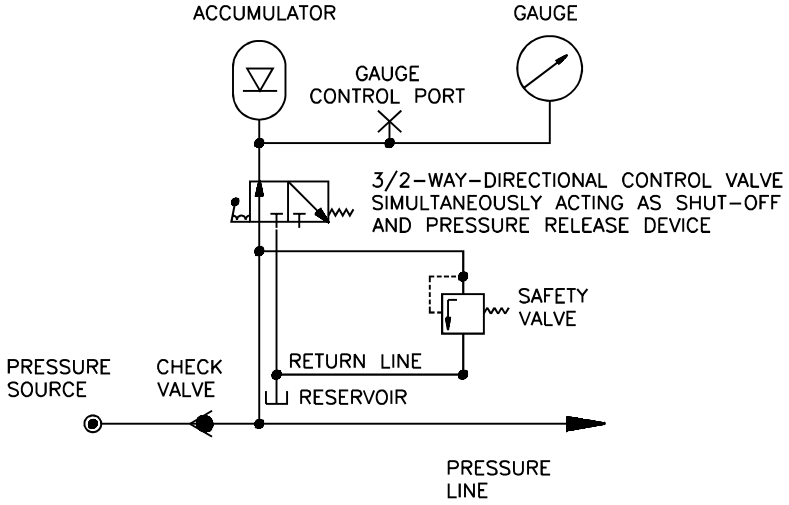

Configuration with a 3/2-way-directional-control which simultaneously serves to isolate the accumulator from thepresure line and release pressure to the return line. The safety valve is permanently communicating with thepressure line, therefore also protecting the circuit. The accumulator is either protected by the safety valve orconnected to the return line.

Example 4

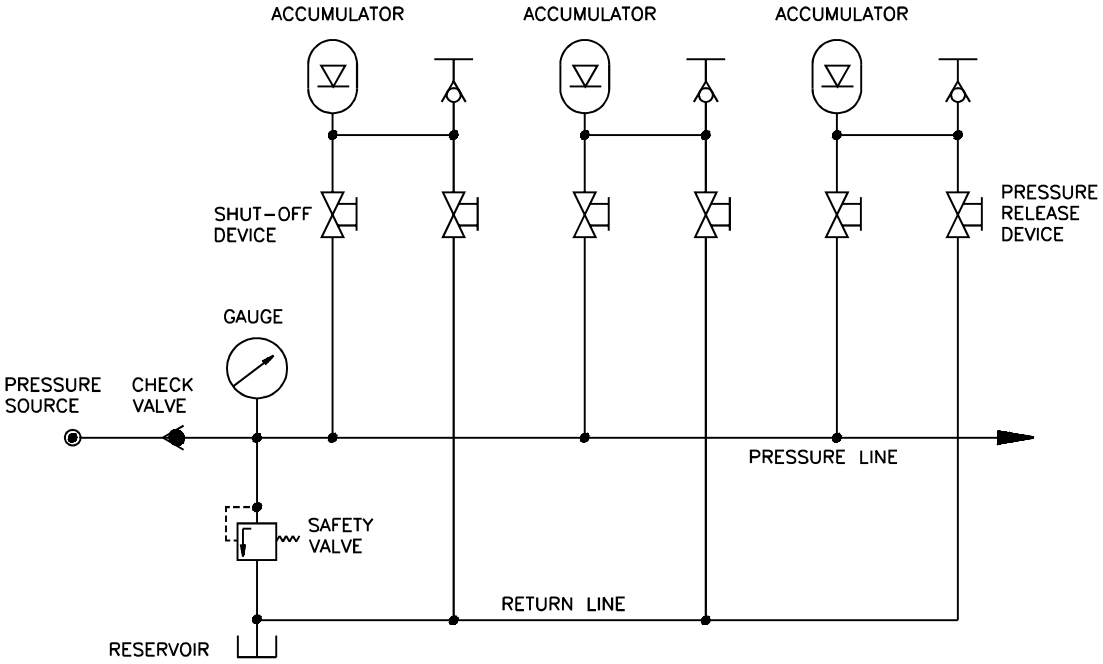

The above configuration shows a group of several accumulators connected with a single pressure line which is permanently connected with a gauge and a safety valve. Each individual accumulator may be isolated from the pressure line by a shut-off device and relased by a pressure device to a return line for maintenance purposes. An external control gauge connected to a quick coupling allows observation of the pressure at the fluid port of each individual accumulator.

Example 5

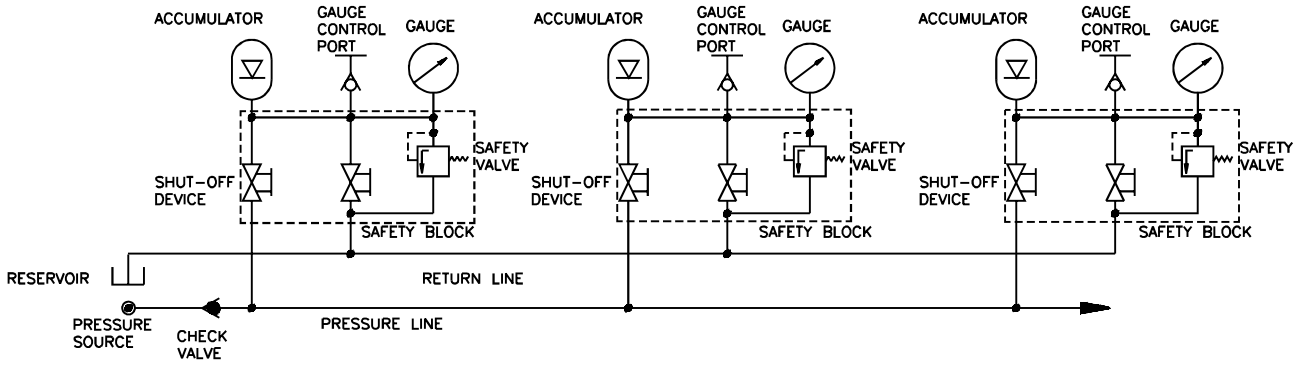

Configuration similar to example 1 but with serveral accumulators each equipped with a safety block. Each safety block includes a safety valve, shut-off device, pressure release device and ports for the pressure line, the return line, gauge, control gauge and the accumulator itself. This configuration meets all safety requirements even for several pressure sources.

Example 6

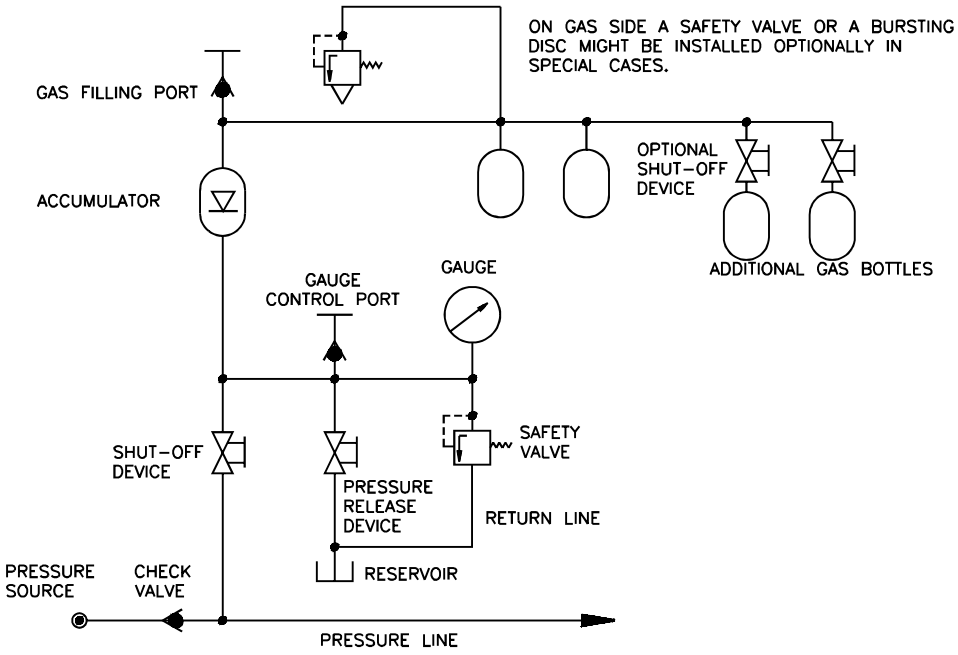

Configuration for a transfer type accumulator with additional gas bottles. Safety equipment for filling procedures is not shown.

Pre-Charging

Use an inert gas such as nitrogen for pre-charging piston accumulators. **Do not use oxygen or shop air.**

If water pumped nitrogen is not available, oil-pumped nitrogen may be used. (C.G.A. standards: Nitrogen gas bottles for water pumped nitrogen has a right-hand valve thread which requires charging and gauging assembly

†144595XX00 for units up to 3000 PSI. Oil-pumped nitrogen requires a left-handed valve thread (use †144596XX00). For all 3000 PSI rated accumulators, use assembly

†144595XX00 (Figure 1). For accumulators rated over 3000 PSI and the precharge requirement is above 2300 PSI, use †870816XX00 (See Figure 3).

If equipment other than the above listed is used, make sure it is compatible with the gas valve assembly. Nitrogen source and all components must be rated for a pressure at least as high as the nitrogen source. **It is strongly recommended that the nitrogen bottle used have the appropriate pressure high pressure regulator (not included).**

Make sure nitrogen supply is shut off. Attach hose to nitrogen bottle. If accumulator has a gas valve as shown in Figure 5 follow steps A through L and skip steps F and J. If accumulator has a gas valve as shown in Figure 6, follow steps A through L and skip steps E and I.

Accumulator having gas valve as per Figure 5.

(A) Remove gas valve guard and gas valve cap.

(B) Back gas chuck "T" handle all the way out (counter clockwise) before attaching charging assembly to accumulator gas valve.

(C) Close bleed valve.

(D) Making sure not to loop or twist the hose, attach swivel nut to gas valve and tighten (10-15 in. lb.) (11.5-17 cm kg).

(E) Turn gas chuck "T" handle until the gauge starts showing the pressure in the accumulator. Do not turn the "T" handle all the way down, as it will dam age the valve core.

(F) **For gas valves as shown in Figure 6,** hold gas valve at point "C" with one (1) wrench while un screwing hex nut at point "D" with a second wrench. This will open the poppet inside the gas valve. Note: Three (3) turns will fully open the valve.

(G) Crack open nitrogen bottle valve and **slowly** fill accumulator. Shut off when gauge indicates desired pre-charge.

(H) Let the pre-charge set for 10 to 15 minutes. This will allow the gas temperature to stabilize. If the desired pre-charge is exceeded, close nitrogen bottle valve, then slowly open bleed valve (Figure 1). Do not reduce pre-charge by depressing valve core with a foreign object. High pressure may rupture rubber valve seat.

(I) When finished pre-charging accumulator, turn "T" handle all the way out on gas chuck (Figure 1), then open bleed valve.

(J) **For gas valves as shown in Figure 6,** with a wrench, tighten hex nut at point "D" to close internal poppet (5-8 ft. lbs.) (5.7-9.2 cm kg).

(K) Hold gas valve to keep from turning, loosen swivel nut, remove assembly. Check for precharge leak using a common leak reactant.

(L) Replace gas valve cap (10-15 in. lbs.) (11.5-17 cm kg) and valve guard. (Gas valve cap serves as a secondary seal.)

† "XX" Denotes to gauge pressure.

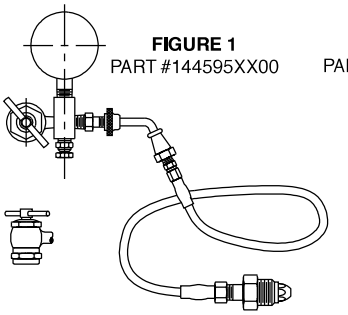

FIGURE 1
PART #144595XX00

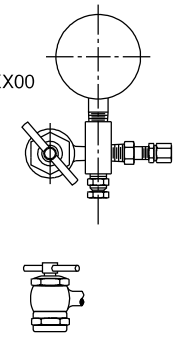

FIGURE 2
PART #085122XX00

3000 PSI UNITS

Part Number	Charging and Gauging Assembly for Cored Accumulators
144595 XX00 (Std) (Right-Hand)	Charging and Gauging Assembly consists of 10' charging hose with standard right-hand thread nitrogen fittings adapter incorporating gas valve, bleeder valve and gas chuck (less gauge). For left-hand thread nitrogen bottle fitting, specify part number 144596XX00.

Part Number	Gauging Assembly for Cored Accumulators
085122XX00	Gauging device consisting of adapter incorporating gas valve, bleeder valve and gas chuck (less gauge).

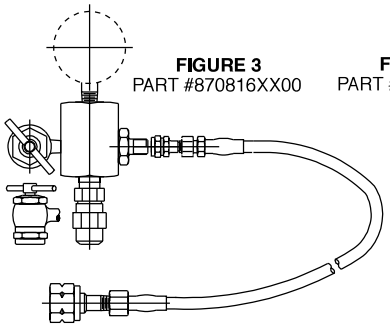

FIGURE 3
PART #870816XX00

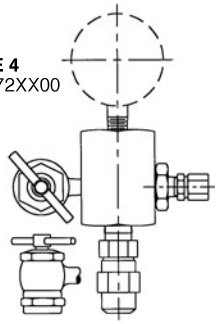

FIGURE 4
PART #871372XX00

5000 PSI UNITS

Part Number	Charging and Gauging Assembly for 5000 PSI
870816XX00	Charging and Gauging Assembly consists of 10' charging hose with standard right-hand thread nitrogen fittings (1.035-14 NGO female)adapter incorporating gas valve, bleeder valve and gas chuck (less gauge).

Part Number	Gauging Assembly for 5000 PSI
871372XX00	Gauging device consisting of adapter incorporating gas valve, bleeder valve and gas chuck (less gauge).

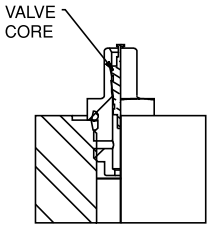

FIGURE 5
Part #L07471000* Gas Valve with medium pressure core for 3000 psi service, and Part #L07688000* Gas Valve with high pressure core for 5000 psi service.

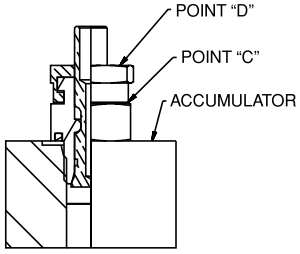

FIGURE 6
Part #L07689000* Gas Valve with poppet for ASME units 7, 9, 12 bore and some 5000 psi units.

Maintenance

Repair Kits (see Parts List) are available for all accumulator models. When ordering repair kits, state complete model number from nameplate. Also specify fluid and temperature at which used.

Occasional replacement of V-o-ring seal on the piston is generally the only maintenance required. Replacement of other seals on end caps and gas valve is recommended (see Kit Numbers).

Periodic checking of pre-charge pressure will detect whether V-o-ring wear is sufficient to begin reducing sealing performance. If pre-charge is low, also check for gas valve and/or end seal leakage. Allowing for temperature difference, if any, from time of its pressure checking, pre-charge pressure will rise if oil gathers in the gas side and will fall if gas leaks into the oil side or out past gas end seals. It is suggested that a check be made a week after installation, and thereafter once a month.

Pre-charge Checking Procedure

Using appropriate valve in the hydraulic system, discharge all oil from accumulator and allow piston to bottom against hydraulic end cap.

For accumulators rated for 3000 PSI or less, with cored gas valve, use gauging assembly as shown in Figure 2 (Part #085122XX00). For accumulators rated over 3000 PSI up to 5000 PSI, use assembly as shown in Figure 4 (Part #871247XX00).

Accumulators having gas valve as per Figure 5.

(1) Remove gas valve guard and gas valve cap.

(2) Back gas chuck “T” handle all the way out (counter clockwise) before attaching charging assembly to accumulator gas valve.

(3) Close bleed valve.

(4) Attach swivel nut to gas valve and tighten (10-15 in. lb.) (11.5-17 cm kg).

(5) Turn gas chuck “T” handle until the gauge starts showing the pressure in the accumulator. Do not turn the “T” handle all the way down, as it will damage the valve core.

(6) To remove gauging assembly turn “T” handle all the way out on gas chuck (Figure 1), then open bleed valve to relieve residual gas charge in the gauging assembly.

(7) Hold gas valve from turning, loosen swivel nut, remove assembly.

(8) Replace gas valve cap (10-15 in. lbs.) (11.5-17 cm kg) and valve guard.

Accumulators having gas valve as per Figure 6.

(9) Remove gas valve guard and gas valve cap.

(10) Close bleed valve.

(11) Attach swivel nut to gas valve and tighten (10-15 in. lb.) (11.5-17 cm kg).

(12) Hold gas valve at point “C” with one (1) wrench while unscrewing hex nut at point “D” with a second wrench. This will open the poppet inside the gas valve. Turn 23 times and read pre-charge. Note: Three (3) turns will fully open the valve.

(13) With a wrench, tighten hex nut at point “D” to close internal poppet (5-8 ft. lbs.) (5.7-9.2 cm kg) then open bleed valve to relieve residual gas charge in the gauging assembly.

(14) Hold gas valve at point “C” with wrench and remove swivel nut assembly.

(15) Replace gas valve cap and tighten (10-15 in. lb.) (11.5-17 cm kg), and install gas valve guard.

Remove from Hydraulic System

Shut equipment down and make certain that hydraulic pressure at the accumulator is at zero. At this point the piston will be bottomed at the hydraulic end.

For accumulators having gas valve as shown in Figure 5, attach gauging assembly as shown in Figure 2 following Steps 1 through 5. Then, open bleed valve until all gas pre-charge is relieved from accumulator. **Then remove gauging assembly and gas valve.**

For accumulators having gas valve as shown in Figure 6, remove gas valve guard and gas valve cap. Then hold valve at point “C” with one (1) wrench while unscrewing hex nut at point “D” with a second wrench. Wait until all gas pre-charge is relieved from the accumulator and **then remove gas valve.**

Remove accumulator from hydraulic system. Threaded holes in hydraulic cap may be used as a means of attachment for lifting, or use a sling around the body.

Disassembly of Accumulator

Once the gas valve is removed - lay the accumulator horizontal and hold down with a strap wrench or in a vise. Some accumulators may have both end caps threaded into the body and some units may only have the gas cap threaded into the body. IN BOTH CASES ALWAYS REMOVE THE GAS CAP FIRST (end cap which contained gas valve). To remove cap or caps, install three (3) pins into the holes in the cap, then, using a long bar working against the pins, unthread the cap from the body. Remove o-rings and back-up rings from end cap.

Remove piston by pushing from hydraulic end with a bar. NEVER TRY TO REMOVE PISTON BY APPLYING COMPRESSED AIR AT OPPOSITE END. To remove V-o-ring from piston, lift seal with O-ring pick or similar tool, moving the tool around the piston several times while using the other hand to work ring off the piston.

Cleaning

Thoroughly clean metal parts in solvent and dry with compressed air. Clean bore of body with a clean, lint-free cloth soaked in clean solvent. Bore must be clean of any visible particles or particles detectable to touch.

Inspection

Inspect piston for cracks, burrs around o-ring grooves, or damage. Examine body bore, using a light, for scratches or scoring. Inspect end caps for damaged threads or burrs on o-ring grooves.

Repair and Replacement

Minor nicks, scratches or light scoring of the body bore can be removed by using crocus cloth. Dress bore until all apparent imperfections have been removed. Replace PTFE wear rings, V-o-rings, o-rings and their respective back-up washers if the original assembly contained them.

Reassembly

Coat all internal parts with clean hydraulic fluid before reassembly.

It is highly recommended to use a piston starting sleeve for reassembly of piston accumulators. Call the factory for price and delivery. Starting sleeve dimensions are shown below. Insert the piston in the starting sleeve with the dished side of the piston toward the gas end. Insert the starting sleeve in the accumulator tube until it rests square on the tube.

Use hammer and a brass rod to tap piston into place until all of piston is 2 inches below beginning of honed bore.

Install new back-up ring first, then a new o-ring on threaded end cap or caps and install into body bore. Care should be exercised not to drag o-ring over threads. End cap will stop against chamfer leading into honed bore (all caps must be tightened to proper torque as per following chart). Cap should be above the end of accumulator body within 1/32" to 3/32".

BORE SIZE	ASSEMBLY TORQUE Ft. Lb.
2	50+ 5.0
3	90+ 7.0
4	160+ 10.0
6	220+ 15.0
7	390+ 25.0
8	390+ 25.0
9	390+ 25.0
12	390+ 25.0

Install gas valve after replacing the o-ring.

Remount accumulator and connect to hydraulic system. Pre-charge accumulator to desired precharge pressure (where space is a problem it may be necessary to pre-charge accumulator before connecting it to the hydraulic system).

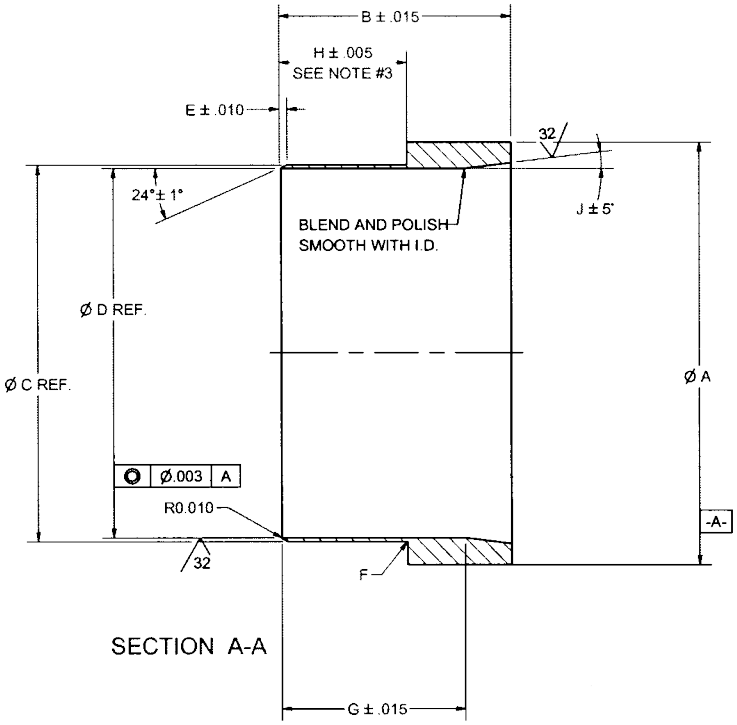

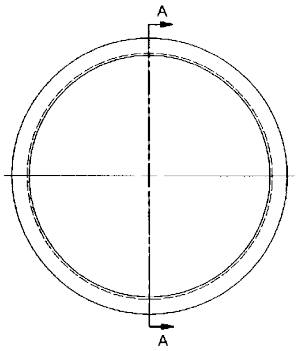

PARTS LIST											
PART NUMBER	A	B	C	D	E	F	G	H	J	SERVICE	BORE SIZE
PSD0000002	2.375	2.375	2.110	2.025	.100	.030	1.375	1.032	7	3K,4K,5K	2
PSD0000003	3.560	2.750	3.110	3.000	.131	.030	1.750	1.312	7	3K,4K,5K	3
PSD0000004	4.750	3.250	4.110	4.030	.089	.030	2.250	1.375	7	3K	4
PSD0000005	6.000	3.500	5.112	5.002	.124	.030	2.500	1.620	7	3K	5
PSD0000006	6.875	4.375	5.864	5.782	.104	.030	3.375	1.562	7	3K	6
PSD0000007	8.250	5.000	7.150	7.001	.173	.030	4.000	2.312	7	3K	7
PSD0000009	11.000	5.500	9.150	9.001	.174	.030	4.000	2.562	7	3K	9
PSD0000012	14.375	6.375	12.105	11.876	.268	.030	4.875	3.634	7	3K	12

“U” Bolts for Piston-Type Accumulators

Accumulator Models (2000 3000)	Part Number and Dimensions							
Piston Bore	**“U” Bolt Part Number**	**A**	**B**	**C**	**D**	**E**	**THD**	**Weight LBS**
A2	0854370000	0.250	2.438	2.688	2.688	1.750	1/4-20	0.20
A3	0862090000	0.500	3.688	4.063	3.625	2.000	3/8-16	0.90
A4	0864960000	0.500	5.000	5.500	4.500	3.000	1/2-13	1.30
A6	0864970000	0.625	7.125	7.750	6.125	3.750	5/8-11	2.50
A7	0854400000	0.625	8.250	8.875	7.000	3.750	5/8-11	3.00
A9	0854410000	0.750	11.250	12.000	9.500	4.500	3/4-10	6.00
A12 (2K)	0854420000	0.875	14.125	15.000	10.250	4.250	7/8-9	8.20
A12 (3K)	0865610000	0.875	14.500	15.375	10.625	4.250	7/8-9	8.30

Notes:

1) Accumulators should be mounted within 20° from vertical for optimal performance.

2) “U” Bolts should never be mounted more than 1 inch from end of accumulator.

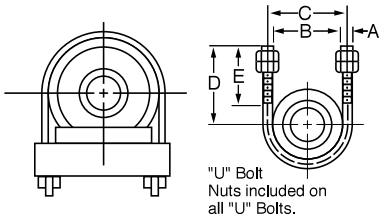

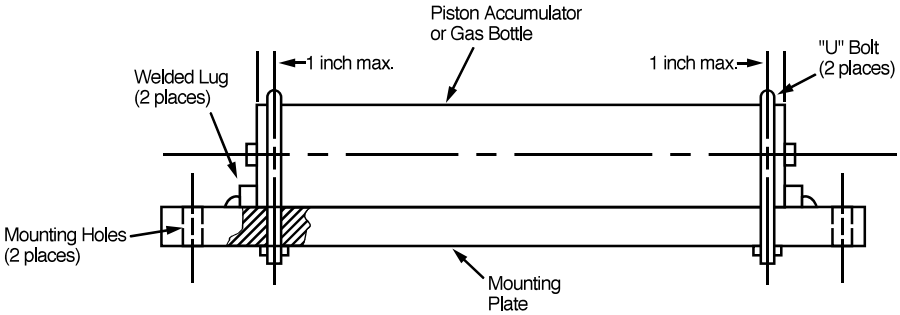

Accumulator Sizing and Selection Software

Parker offers leading edge application assistance, in the form of the InPHorm Accumulator Sizing and Selection Software or visit www.parker.com/accumulator for more information. For further engineering assistance, contact Parker's Accumulator Technical Support Group at (815) 636-4100.

Accumulator Seals

Piston accumulators are available for use with many operating medias. Fluid should be a non-dangerous liquid as well as precharged with an inert gas such as nitrogen. Available seal compounds are shown in the table below:

Seal Code	Polymer	**Recommended Operating Temperature Range	Maximum Temperature with Reduced Life	General Application and Compatibility*
K	Buna Nitrile	-20°F to 165°F -29°C to 74°C	200°F 93°C	Parker's Standard Compound – Compatible with most mineral oil-based fluids
E	Fluorocarbon Elastomer	-10°F to 250°F -23°C to 121°C	400°F 204°C	Compatible with most mineral oil-based fluids at higher temperatures and some exotic fluids
D	Ethylene Propylene	-40°F to 250°F -40°C to 121°C	300°F 149°C	Compatible with most phosphate ester fluids and some synthetic fluids
H	Hydrogenated Nitrile	-25°F to 320°F -32°C to 160°C	350°F 177°C	Compatible with most oil-based and biodegradable fluids, maintains sealing effectiveness at a wide range of temperatures
Q	Low Temp. Nitrile	-45°F to 160°F -43°C to 71°C	200°F 93°C	Compatible with most mineral oil-based fluids and maintains sealing effectiveness at low temperatures

**Consult local distributor or factory for fluid compatibility information. Temperature ranges may vary depending upon fluid used in hydraulic system.*

***The temperature listed indicates the operating temperature range of the seals, not the accumulator.*

Water Service Option (W)

Piston accumulators are available for use with water as the fluid media. Modifications include electroless nickel plating all surfaces and metal parts. Consult factory for details.

Corrosive Fluids and Enviromentments

Standard piston accumulators are not designed for corrosive fluids and enviroments. Consult factory for special options for these types of fluids and enviromentments.

Accumulator Storage

In order to prepare a piston accumulator for proper storage for future use, the piston must be moved off the hydraulic cap by as much as 2 inches. Proceed by pouring 10 to 150 cubic inches (depending on the size of accumulator) of the system fluid through the hydraulic port in the accumulator end and plug the port using a stainless steel fitting, then pre-charge the unit with nitrogen to 100±10 psig to allow equal pressure on both sides of the seal.

The pre-charge should be bled off and the system fluid in the accumulator must be drained prior to installation of the piston accumulator on the system.

It is also recommended that the units be stored in a vertical position to prevent the seals from developing a set (flat spot) on the side that the piston weight is exerted.

The piston accumulator should be stored in a cool, dry place away from sun, ultraviolet and fluorescent lights as well as electrical equipment. Direct sunlight or fluorescent light can cause the seals to weather check and dry rot, which appear on the seal and o-ring surface as cracks. The ideal temperature for storage is 70°F.

Parts List — Hydraulic Accumulators

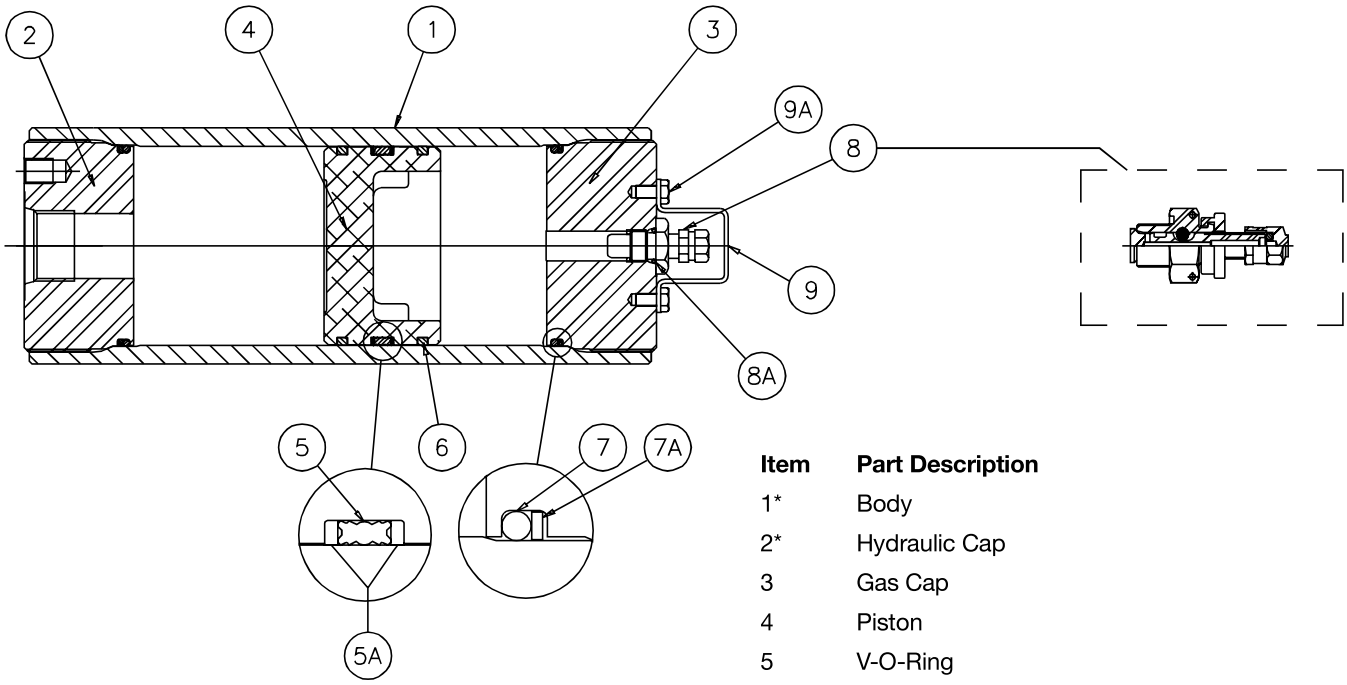

Item	Part Description
1*	Body
2*	Hydraulic Cap
3	Gas Cap
4	Piston
5	V-O-Ring
5A	V-O-Ring Back-Up Washers
6	PTFE Ring (Piston)
7	O-Ring
7A	O-Ring Back-Up Washer
8▲	Gas Valve
8A	Gas Valve O-Ring
9	Gas Valve Guard
9A	Screw

*Some units may have these two components welded together.

▲A.S.M.E. Units, 7", 9" and 12" bore sizes, and some units rated above 3000 PSI will have valve per Figure 6 (Part No. L07689000*). Other units will have gas valve per Figure 5 (Part No. L07471000*) which will contain gas valve core Part No. 5822220000. Use tool (Part No. 5824410000) to remove and replace new core.

Seal Kit Numbers (Includes items 5, 5A, 6, 7, 7A, 8A)

Material	Bore Size						
	2"	3"	4"	6"	7"	9"	12"
Buna-N (Std.)	RK0200K000	RK0300K000	RK0400K000	RK0600K000	RK0700K000	RK0900K000	RK1200K000
Fluorocarbon	RK0200E000	RK0300E000	RK0400E000	RK0600E000	RK0700E000	RK0900E000	RK1200E000
EPR	RK0200D000	RK0300D000	RK0400D000	RK0600D000	RK0700D000	RK0900D000	C.F.*
Hydrogenated Nitrile	RK0200H000	RK0300H000	RK0400H000	RK0600H000	RK0700H000	C.F.*	C.F.*
Low Temp Nitrile	RK0200Q000	RK0300Q000	RK0400Q000	RK0600Q000	RK0700Q000	RK0900Q000	C.F.

**C.F. = Consult Factory*

Series "BA" Bladder Accumulators

Maintenance Instructions

- 10 cu. in. through 15 Gallons
- 250 bar & 350 bar Standard
- 3,000 & 5,000 PSI Standard
- Bottom & Conventional Top Repairable

Installation

All accumulators shipped from the factory will be precharged to a nominal pressure in order to seat the poppet valve on the hydraulic port. In this case the precharge will not be listed on the label. However, in some cases they will be shipped with a nitrogen charge, the value of which will be marked on the label/nameplate.

Keep the hydraulic port covered to keep out foreign material until ready to make the hydraulic connections.

The accumulator should be mounted within 25° of vertical with the hydraulic port on the bottom. It should also be rigidly mounted using appropriate mounting hardware, which is shown in the Accumulator Accessories section of this catalog. The hydraulic circuit, which contains a connection to the accumulator, should be designed so that it automatically discharges all hydraulic fluid from the accumulator when the equipment is turned off.

Parker Hannifin
Global Accumulator Division
United States

Installation

Most accumulators shipped from the factory carry a nominal pre-charge. However, in some cases they will be shipped with some amount of nitrogen charge, the value of which will be stamped on the nameplate.

Keep the hydraulic port covered to keep out foreign material until ready to make the hydraulic connections.

The accumulator should be mounted within 25° of vertical with the hydraulic port on the bottom. It should also be rigidly mounted using appropriate mounting hardware, which is shown in the Accumulator Accessories section of this catalog. The hydraulic circuit, which contains a connection to the accumulator, should be designed so that it automatically discharges all hydraulic fluid from the accumulator when the equipment is turned off.

Example 1

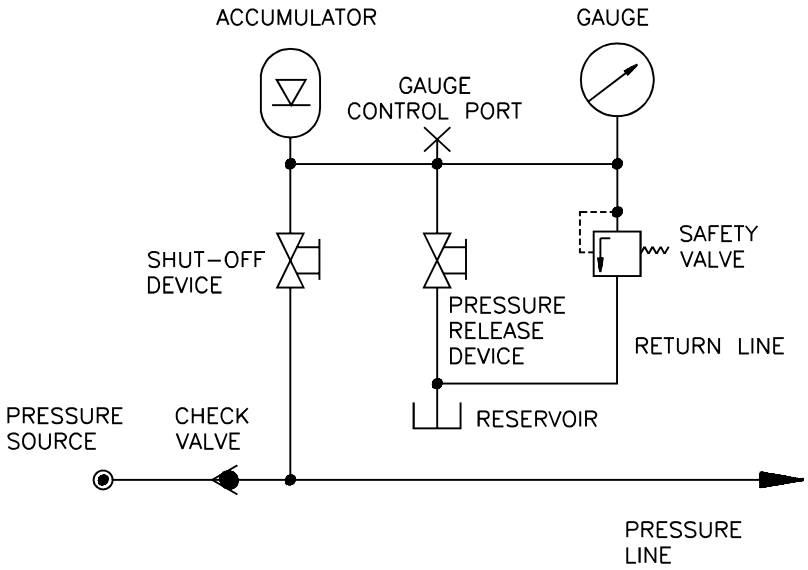

Basic safety equipment for a single accumulator with permanently connected safety valve and gauge, gauge control port, manually operated shut-off device, pressure release device and return line to the reservoir. Safety components may be connected by lines and/or installed in a safety block. The accumulator must always be protected with sufficient discharge capacity. If a check valve prevents flow back to the pressure source (pump), a shut-off device is not required for safety reasons but may be appropriate for service and maintenance.

Example 2

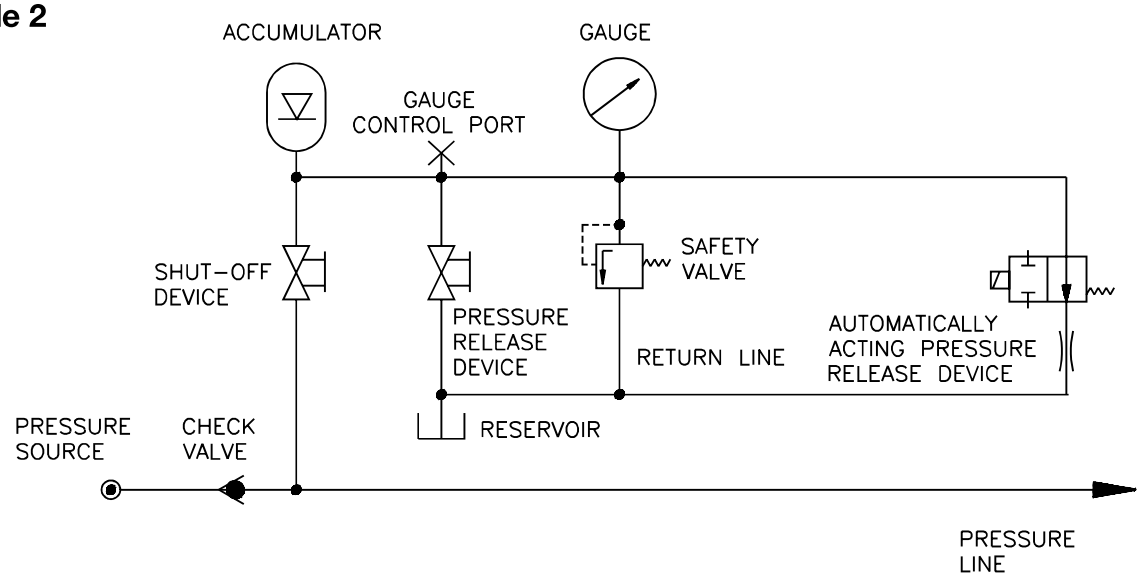

Configuration with additional pressure release device which opens automatically in the case of circuit break down.

Example 3

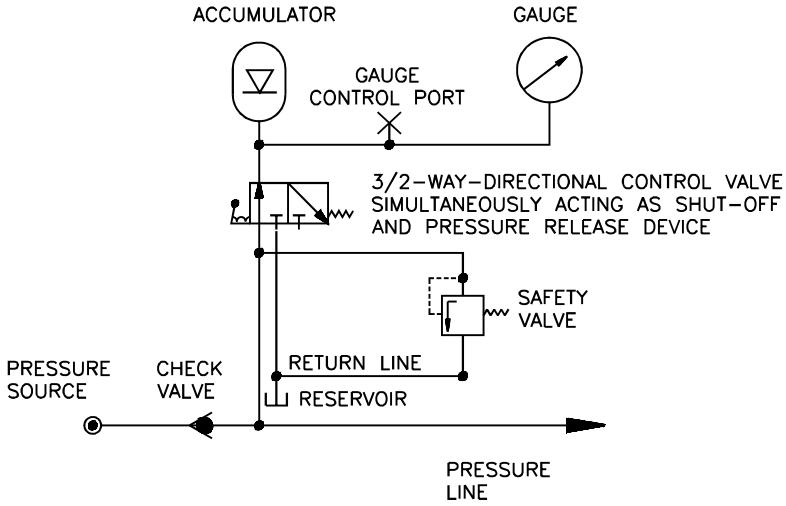

Configuration with a 3/2-way-directional-control which simultaneously serves to isolate the accumulator from the presure line and release pressure to the return line. The safety valve is permanently communicating with the pressure line, therefore also protecting the circuit. The accumulator is either protected by the safety valve or connected to the return line.

Example 4

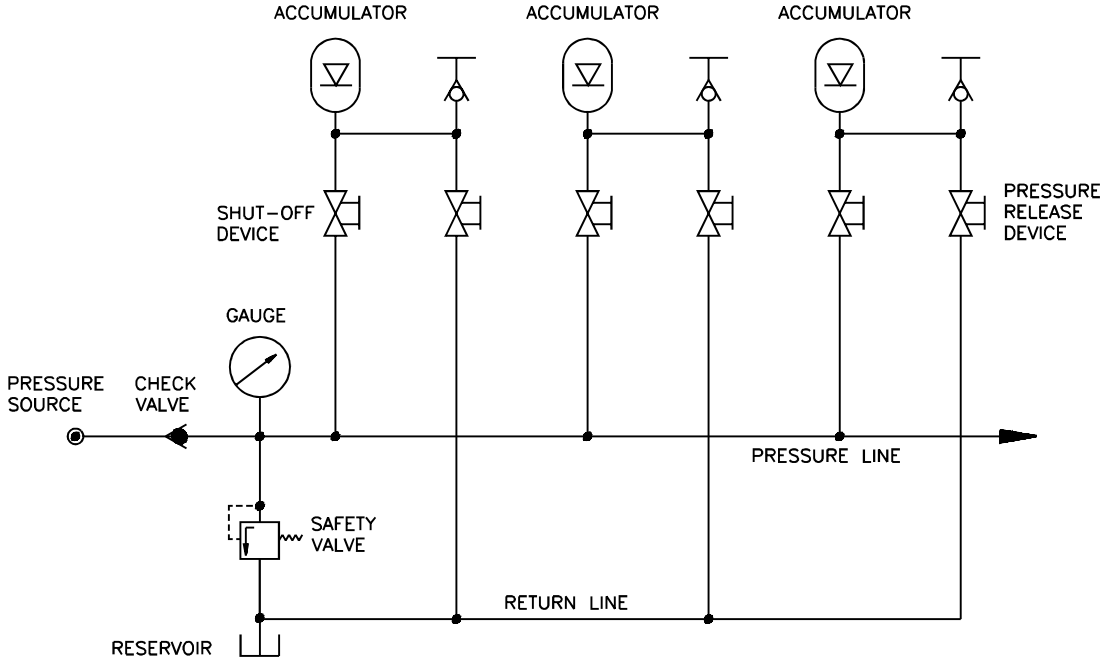

The above configuration shows a group of several accumulators connected with a single pressure line which is permanently connected with a gauge and a safety valve. Each individual accumulator may be isolated from the pressure line by a shut-off device and released by a pressure device to a return line for maintenance purposes. An external control gauge connected to a quick coupling allows observation of the pressure at the fluid port of each individual accumulator.

Example 5

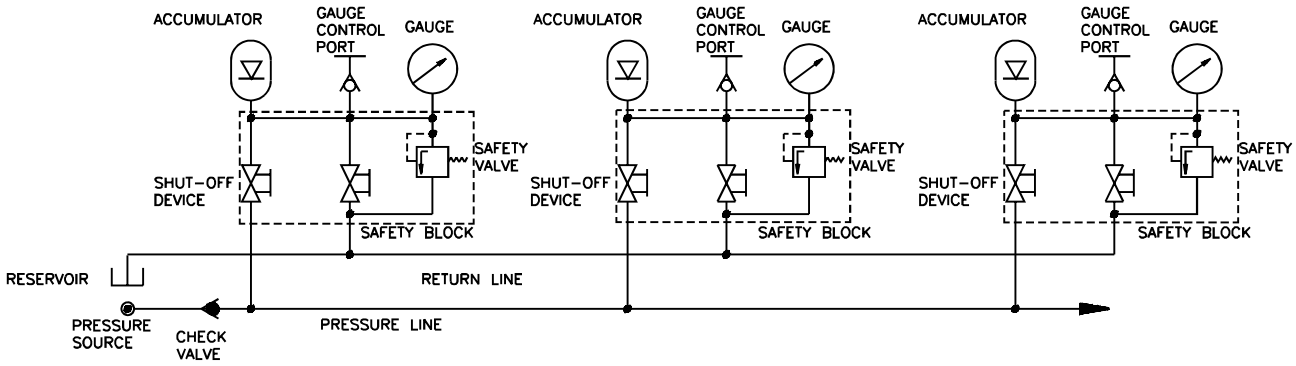

Configuration similar to example 1 but with serveral accumulators each equipped with a safety block. Each safety block includes a safety valve, shut-off device, pressure release device and ports for the pressure line, the return line, gauge, control gauge and the accumulator itself. This configuration meets all safety requirements even for several pressure sources.

Example 6

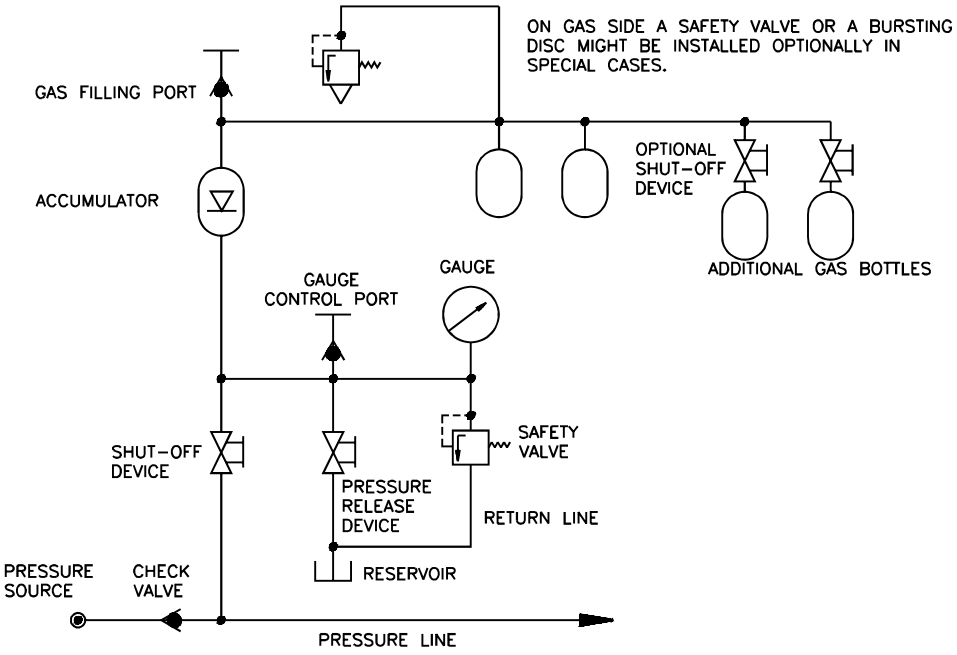

Configuration for a transfer type accumulator with additional gas bottles. Safety equipment for filling procedures is not shown.

Pre-Charging

Use only an inert gas such as nitrogen for precharging piston accumulators. **Do not use oxygen or shop air. included.**

If water pumped nitrogen is not available, oil-pumped nitrogen may be used. (C.G.A. Standards: Nitrogen gas bottles for water pumped nitrogen has a right-hand valve thread which requires charging and gauging assembly †144595XX00 for units up to 3000 PSI. Oil-pumped nitrogen requires a left-handed valve thread (use †144596XX00).

It is recommended to use charging and gauging assembly as shown in Figure 1 (Part †144595XX00, right-hand thread; Part †144596XX00, left-hand thread), and in Figure 4 Part †087100XX00 for 1-15 gallon & Part †087102XX00 for 10-150 cu. in. accumulator rated for 3,000 PSI or less. For accumulators rated for 5,000 PSI, as well as the 25-40 gallon, 3,000 PSI accumulators, use assembly shown in Figure 6 (Part †870816XX00). If other equipment is used, make sure it is compatible with the gas valve assembly and nitrogen source. All components must be rated for a pressure at least as high as the nitrogen source. **It is strongly recommended that the nitrogen bottle used have the appropriate pressure high pressure regulator (not included).**

Make sure nitrogen supply is shut off. Attach hose to nitrogen bottle. If accumulator has a gas valve as shown in Figure 8A or 8B, follow steps A through L and skip steps F and J.
If accumulator has a gas valve as shown in Figure 9, follow steps A through L and skip steps E and I.

Accumulators having gas valve per Figure 8A or 8B

(A) Remove gas valve guard and gas valve cap.

(B) Back gas chuck "T" handle all the way out (counterclockwise) before attaching charging assembly to accumulator gas valve.

(C) Close bleed valve.

(D) Making sure not to loop or twist the hose, attach swivel nut to gas valve and tighten (10-15 in. lb.) (11.5-17 cm kg).

(E) Turn gas chuck "T" handle until the gauge starts showing the pressure in the accumulator. Do not turn the "T" handle all the way down, as it will damage the valve core.

(F) **For gas valves as shown in Figure 9,** hold gas valve at point "C" with one (1) wrench while unscrewing hex nut at point "D" with a second wrench. This will open the poppet inside the gas valve. Note: Three (3) turns will fully open the valve.

(G) Crack open nitrogen bottle or regulator valve and ***slowly*** fill accumulator. **Caution:** If the precharge is not done slowly, the bladder may suffer permanent damage. Shut off when gauge indicates 100 PSI above desired precharge. (Note: It is recommended that precharge pressure be at least 25% of maximum system pressure.) Damage to bladder may occur if this ratio is not maintained or exceeded. For shock suppression applications, precharge is usually set at about 65% of system pressure. When the accumulator is used to supplement pump flow, auxiliary power supply or leakage compensation, precharge is usually set at approximately 90% of minimum system pressure.

(H) Let the precharge set for 10 to 15 minutes. This will allow the gas temperature to stabilize. If the desired precharge is exceeded, close nitrogen bottle valve, then slowly open bleed valve. Do not reduce precharge by depressing valve core with a foreign object. High pressure may rupture rubber valve seat.

(I) When finished precharging accumulator, turn "T" handle all the way out on gas chuck, then open bleed valve. not

(J) For gas valves as shown in Figure 9, with a wrench, tighten hex nut at point "D" to close internal poppet (5-8 ft. lbs.) (5.7- 9.2 cm kg).

(K) Hold gas valve to keep from turning, loosen swivel nut, remove assembly. Check for precharge leak using a common leak reactant.

(L) Replace gas valve cap (10-15 in. lbs.) (11.5-17 cm kg) and valve guard. (Gas valve cap serves as a secondary seal.)

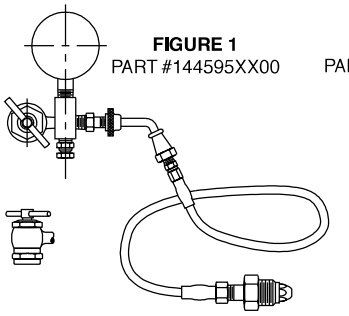

FIGURE 1
PART #144595XX00

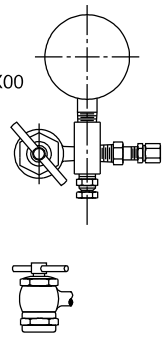

FIGURE 2
PART #085122XX00

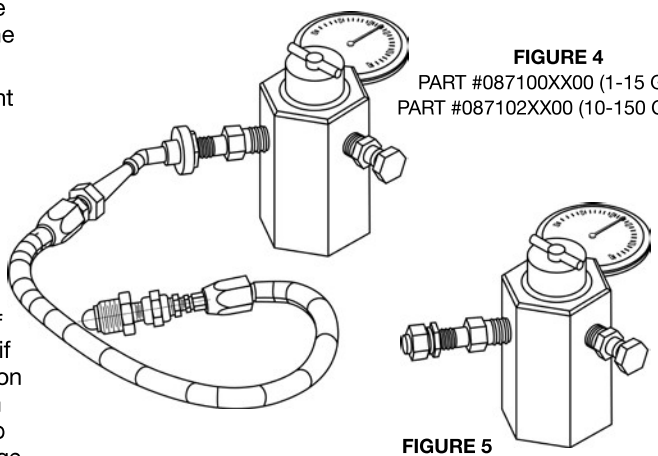

FIGURE 4
PART #087100XX00 (1-15 GAL.)
PART #087102XX00 (10-150 CU. IN.)

FIGURE 5
PART #087101XX00 (1-15 GAL.)
PART #087103XX00 (10-150 CU. IN.)

CAN BE USED ON BOTTOM AND TOP REPAIRABLE 3,000 PSI ACCUMULATORS

† "XX" Denotes to gauge pressure.

Part Number	Charging and Gauging Assembly for 3000 PSI Bottom Repairable
144595 XX00 (Std) (Right Hand)	Charging and Gauging Assembly consists of 10' charging hose with standard right-hand thread nitrogen fittings adapter incorporating gas valve bleeder valve and gas chuck (less gauge). For left-hand thread nitrogen bottle fitting specify part number 144596 XX00.
Part Number	**Charging and Gauging Assembly for 3000 PSI Bottom & Top Repairable**
087102 XX00 (10-150 cu. in.) 087100 XX00 (1-15 gal.)	Charging and Gauging Assembly consists of 10' charging hose with standard right-hand thread nitrogen fittings adapter incorporating gas valve bleeder valve and gas chuck (less gauge).
Part Number	**Gauging Assembly for 3000 PSI Bottom Repairable**
085122 XX00	Gauging device consisting of adapter incorporating gas valve bleeder valve and gas chuck including gauge.
Part Number	**Gauging Assembly for 3000 PSI Top Repairable**
087103 XX00 (10-150 cu. in.) 087101 XX00 (1 - 15 gal.)	Gauging device consisting of adapter incorporating gas valve bleeder valve and gas chuck (less gauge).

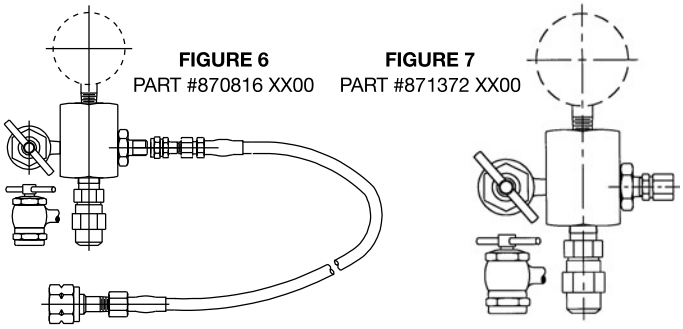

FIGURE 6 PART #870816 XX00 **FIGURE 7** PART #871372 XX00

25 - 40 GALLON 3000 PSI AND ALL 5000 PSI UNITS

Part Number	Charging and Gauging Assembly for 25-40 Gal. 3000 & 5000 PSI
870810 XX00	Charging and Gauging Assembly consists of 10' charging hose with standard right-hand thread nitrogen fittings (1.035-14 NGO female) adapter incorporating gas valve bleeder valve and gas chuck (less gauge).
Part Number	**Gauging Assembly for 5000 PSI**
871372 XX00	Gauging device consisting of adapter incorporating gas valve bleeder valve and gas chuck (less gauge).

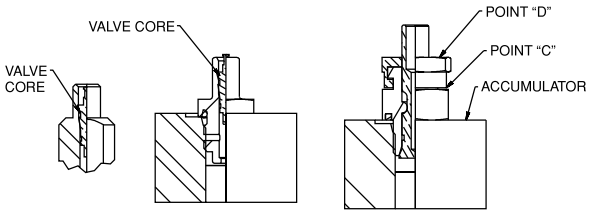

FIGURE 8A **FIGURE 8B** **3000 PSI VALVES** **FIGURE 9** **5000 PSI VALVES**

Maintenance

Little maintenance is required for a bladder accumulator. If there is external leakage, tighten all connections. If leakage continues, remove accumulator from system and replace faulty components.

After original installation, check pre-charge once during first week to see that no leak has developed.Thereafter, check pre-charge monthly. Check pre-charge if the system is acting sluggish. If pre-charge is low, check gas valve for leakage and recharge.

If there is no gas in bladder and fluid appears at gas valve, unit must be removed and bladder replaced.

Pre-charge Checking Procedure

Using appropriate valve in the hydraulic system, discharge all oil from accumulator.

For accumulators rated for 3000 PSI, either use gaging assembly in Figure 2 (Part #085122XX00) or gaging assembly in Figure 5 (Part #087101XX00) and follow Steps 1 through 7.

For accumulators rated for 5000 PSI, use gaging assembly in Figure 7 (Part #871372XX00) and follow steps 8 through 14.

3000 PSI RATED UNITS

(1) Remove gas valve guard and gas valve cap.

(2) Close bleed valve and turn "T" handle all the way out.

(3a) Attach gauging assembly to gas valve or to gas valve extension and tighten swivel nut (10-15 in. lb.) (11.5-17 cm kg), when using gauging assembly in Figure 1.

(3b) Install gas valve o-ring on the gas valve, and attach gauging assembly to valve stem. Tighten assembly (25-30 in. lb.) (29-35 cm kg) when using gauging assembly in Figure 4.

(4) Turn "T" handle all the way down, which will depress core in gas valve and check pressure.

(5) To remove gauging assembly, turn "T" handle all the way out and then open bleeder valve.

(6) Hold gas valve from turning, loosen swivel nut and remove assembly.

(7) If necessary, remove valve extension, then install cap on gas valve (10-15 in. lb.) (11.5-17 cm kg) and valve guard.

25-40 GALLON 3000 PSI AND 5000 PSI RATED UNITS EQUIPPED WITH MS GAS VALVE AS SHOWN IN FIGURE 9.

(8) Remove gas valve guard and gas valve cap.

(9) Close bleed valve.

(10) Attach gauging assembly to gas valve and tighten swivel nut (10-15 in. lb.) (11.5-17 cm kg).

(11) Referring to Figure 9, hold gas valve at point "C" with one (1) wrench while unscrewing hex nut at point "D" with a second wrench.This will open the poppet inside the gas valve. Note, four (4) turns will fully open poppet. Check pre-charge pressure.

(12) With wrench, tighten hex nut at point "D" to close internal poppet (10-15 in. lb.) (11.5-17 cm kg).

(13) Hold gas valve at point "C" with a wrench and remove swivel nut assembly.

(14) Replace cap on gas valve (10-15 in. lb.) (11.5-17 cm kg) and install gas valve guard.

Removal of Accumulator From Hydraulic System

Shut equipment down and make certain that hydraulic pressure at the accumulator is at zero.

Remove gas valve guard and gas valve cap.

3000 PSI RATED UNITS

Accumulators rated for 3000 PSI will have a gas valve as shown in Figure 8A or 8B. For these units, attach gaging assembly (Part #085122XX00) or (Part #087103XX00)for 10 - 150 cubic inch, and (Part #087101XX00) for 1-15 gallon.

Open bleed valve and release all the gas pressure. Detach gauging assembly and, using valve core removing tool (Part #582441XX00), **remove valve core.**

Remove accumulator from hydraulic system.

25-40 GALLON 3000 PSI AND 5000 PSI RATED UNITS EQUIPPED WITH MS GAS VALVE AS SHOWN IN FIGURE 9.

Accumulators rated for 5000 PSI will have a gas valve as shown in Figure 9. For these units, after removing valve cap, hold valve at point "C" with one (1) wrench while unscrewing hex nut at point "D" with a second wrench until gas begins to escape through the top of the valve. Wait until all the gas pressure has been released.

(Caution: Keep face away from gas valve as the high pressure nitrogen is discharging.)

Remove accumulator from hydraulic system.

Disassembly of Bottom Repairable Accumulators

Figure 1. Once the accumulator has been removed from the equipment, the accumulator body should be secured in a vise, preferably a chain vise. If a standard jaw vise is used, brass inserts should be used to protect the accumulator hydraulic port assembly from damage. Clamp on wrench flats only when using a jaw vise to prevent accumulator from turning.

FIGURE 1

Figure 2. Remove bleeder plug (if the accumulator is equipped with one) on hydraulic port assembly. Using a spanner wrench, remove lock nut from the hydraulic port assembly; use an adjustable wrench on the flats located on the port assembly to prevent port assembly from rotating.

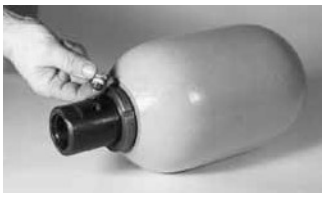

FIGURE 2

Figure 3. Remove spacer, then push the hydraulic port assembly into the shell prior to Step 4.

FIGURE 3

Figure 4. Insert hand into the accumulator shell and remove the o-ring backup, o-ring, metal backup. Seperate the anti-extrusion ring from the hydraulic port. Fold anti-extrusion ring to enable removal of anti-extrusion ring from shell.

FIGURE 4

Figure 5. Remove hydraulic port plug from accumulator shell.

FIGURE 5

Figure 6. Remove jam nut from bladder valve stem. Secure valve stem from twisting with an appropriate wrench applied to the valve stem flats.

FIGURE 6

Figure 7. Fold bladder and pull out of accumulator shell. A slight twisting motion while pulling on the bladder reduces effort required to remove bladder from shell. If bladder is slippery, hold with a cloth.

FIGURE 7

Clean & Inspect

Cleaning: All metal parts should be cleaned with a cleaning agent. Seals and soft parts should be wiped clean.

Bladder: Inflate bladder to normal size. Wash bladder with a soap solution. If soap solution bubbles, discard bladder. After testing, deflate bladder immediately.

Hydraulic Port: Inspect assembly for damage; check the poppet plunger to see that it spins freely and functions properly.

In cases where the accumulator is used with water, check assembly for rust and/or defective plating. If rust is detected, clean with commercial rust remover. If parts are pitted, replace with new components. If protective plating is damaged, replace with new components.

Seals: Check anti-extrusion ring and soft seals for damage and wear; replace all worn or damaged seals with original equipment seals from the Hydraulic Accumulator Division.

Shell: After shell has been cleaned with a cleansing agent, check the inside and outside of shell. Special attention should be given to the area where the gas valve and hydraulic assembly pass through the shell. Any nicks or damages in this area could destroy the accumulator bladder or damge new seals. If this area is pitted consult factory.

Bladder Assembly in Bottom Repairable Accumulators

1. After shell has been cleaned and inspected, replace accumulator shell in vise or on table.
2. Spray the inside of the accumulator shell with approximately 10% of the accumulator volume with clean system fluid to lubricate and cushion bladder. Make sure the entire internal of the shell is lubricated.
3. With all gas completely exhausted from bladder, collapse bladder and fold longitudinally in a compact roll.
4. **Figure 8.** Insert the bladder pull rod through the valve stem opening and through the shell fluid port; attach the bladder pull rod to the bladder valve stem.
5. With one hand, pull the bladder pull rod while feeding the bladder into the shell with the other hand. Slight twisting of bladder will assist in this insertion.
6. **Figure 9.** Once the bladder valve stem has been pulled through the valve stem opening in the shell, install the valve stem nut by hand. Once the valve stem nut is in place, remove the bladder pull rod.

FIGURE 8

FIGURE 9

Disassembly of Conventional Top-Repairable Accumulators

The conventional top-repairable accumulator uses a gas-end adapter which is retained in the shell with an anti-extrusion ring exactly like those used in port assemblies (see **Figure 10**).

1. Make sure the gas is relieved from the accumulator. (See Removal of Accumulator from System).
2. Remove jam nut from bladder gas valve stem using a 1-5/16" socket wrench.

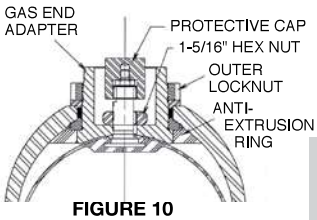

FIGURE 10

3. Using a spanner wrench, remove outer lock nut on the gas end adapter.
4. Push the gas end adapter complete with the bladder into the shell.
5. Insert hand into accumulator, remove the o-ring back-up, o-ring and metal back-up. Separate the anti-extrusion ring from the gas end adapter.
6. Fold the anti-extrusion ring and remove from shell. See **Figure 4.**
7. Remove gas end adapter from shell.
8. Remove bladder from shell.
   NOTE: Conventional top repairable accumulators may be repaired by removing the bladder from either the hydraulic end or the gas end of the accumulator.

Clean & Inspect

Cleaning: All metal parts should be cleaned with a cleaning agent. Seals and soft parts should be wiped clean.

Bladder: Inflate bladder to normal size. Wash bladder with a soap solution. If soap solution bubbles, discard bladder. After testing, deflate bladder immediately.

Hydraulic Port: Inspect assembly for damage; check the poppet plunger to see that it spins freely and functions properly. In cases where the accumulator is used with water, check assembly for rust and/or defective plating. If rust is detected, clean with commercial rust remover. If parts are pitted, replace with new components. If protective plating is damaged, replace with new components.

Seals: Check anti-extrusion ring and soft seals for damage and wear; replace all worn or damaged seals with original equipment seals from the Accumulator Division.

Shell: After shell has been cleaned with a cleansing agent, check the inside and outside of shell. Special attention should be given to the area where the gas valve and hydraulic assembly pass through the shell. Any nicks or damages in this area could destroy the accumulator bladder or damage new seals. If these areas are pitted, consult factory.

Bladder Assembly in Conventional Top-Repairable Accumulators

1. Spray the inside of the accumulator shell with a liberal amount of clean system hydraulic fluid to lubricate and cushion the bladder. Make sure the entire internal surface of the shell is lubricated.
2. With all air completely exhausted from bladder, collapse bladder and fold longitudinally in a compact roll.
3. Install the gas end adapter on the bladder and secure with jam nut.
4. Insert bladder into accumulator shell.
5. Insert gas end adapter.
6. Fold anti-extrusion ring and place inside accumulator.
7. Reaching inside the accumulator, insert the gas end adapter through the anti-extrusion ring and pull into place. The steel surface on anti-extrusion ring should face outward.
8. Holding the gas end adapter in place, fill accumulator with approximately 50 PSI nitrogen. This will hold the gas end adapter in place.
9. Install the metal backup, o-ring and o-ring backup.
10. Install the outer spacer.
11. Install the outer locknut.

Hydraulic Port Assembly Installation

1. Holding the hydraulic port assembly by the threaded end, insert the poppet end into the shell fluid port. Lay complete assembly inside shell.
2. **Figure 11.** Fold anti-extrusion ring to enable insertion into the shell. Once the anti-extrusion ring has cleared the fluid port opening, place the anti-extrusion ring on the poppet assembly with the steel collar facing toward the shell fluid port.

FIGURE 11

3. Pull the threaded end of the port assembly through the shell fluid port until it seats solidly into position on the shell fluid port opening.

FIGURE 12

4. **Figure 12.** With port assembly firmly in place, install valve core into the bladder stem. Slowly pressurize the bladder, using dry nitrogen with sufficient pressure (approximately 40-50 PSI) to hold poppet assembly in place so both hands are free to continue with assembly.

FIGURE 13

5. **Figure 13.** Install metal backup washer over hydraulic port assembly and push into the shell fluid port to bottom it out on anti-extrusion ring.

FIGURE 14

6. Install o-ring over hydraulic port assembly and push it into the shell fluid port until it has bottomed out against washer. ***CAUTION: Do not twist o-ring.***
7. Install o-ring backup over hydraulic port assembly and push until it bottoms against o-ring (1-40 gallon sizes and 5K only).
8. Insert spacer with the smaller diameter of the shoulder facing the accumulator shell.
9. **Figure 14.** Install the lock-nut on the hydraulic port assembly and tighten securely. This will squeeze the o-ring into position. Use appropriate wrench on flats of port assembly to insure the unit does not turn.
10. Thread bleeder plug into the hydraulic port assembly.
11. Position accumulator so that fluid (same fluid as used in the system) can be poured into the accumulator (add approximately 10% of the accumulator capacity). This fluid will act as a cushion when the accumulator is pre-charged with gas.
12. Pre-charge accumulator to desired pressure. See pre-charge instructions. Install accumulator on machine.

Accumulator Parts Description

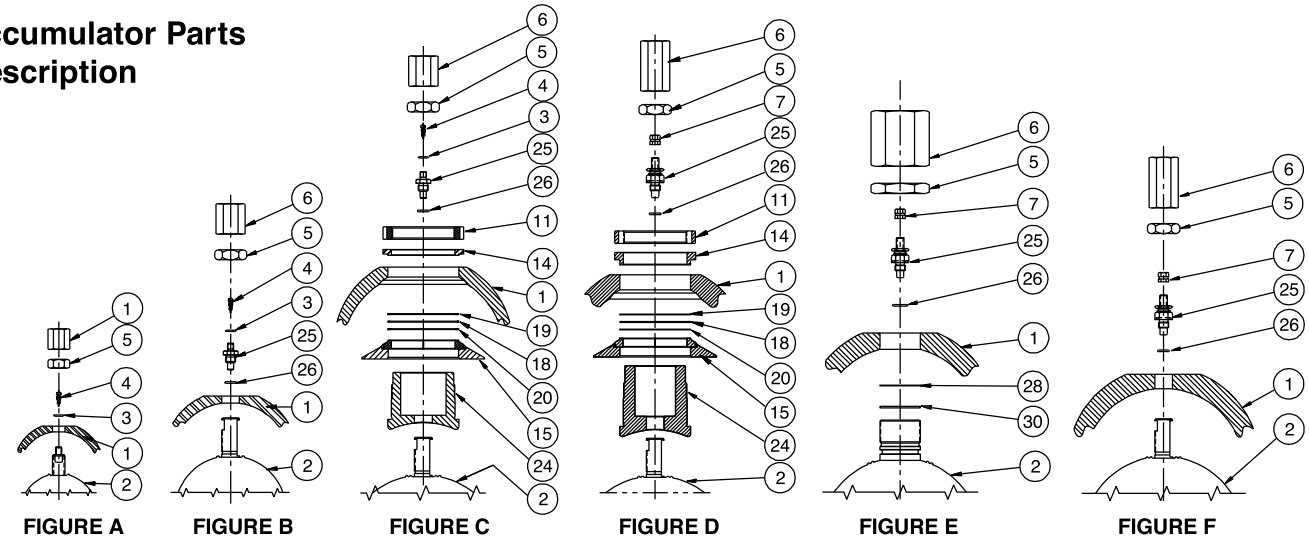

FIGURE A 3000 PSI 10 CI -150 CI

FIGURE B 3000 PSI 1-15 GALLON

FIGURE C 3000 PSI CONVENTIONAL TOP REPAIRABLE

FIGURE D 5000 PSI CONVENTIONAL TOP REPAIRABLE

FIGURE E 5000 PSI 2" VALVE STEM

FIGURE F 5000 PSI

Item No.	Description
1	Shell
2	Bladder
3	O-ring
4	Valve Core
5	Lock Nut (Jam)
6	Protective Cap
7	Valve Cap
11	Lock Nut Outer
14	Spacer
15	Anti-Extrusion Ring Ass'y.
18	O-ring
19	O-ring Back-up
20	O-ring Back-up Metal
24	Top Adapter
25	Gas Valve
26	O-ring (Gas Valve)
28	Back-up Washer (Stem)
30	O-ring (Stem)

Suggested Approximate Torque Values

Protective Cap	14 ft. lbs.
Lock Nut (Jam)	56 ft. lbs.
Valve Core	3-4 in. lbs.
Bleeder Plug	10 ft. lbs.
Lock Nut Outer (1 qt.)	73 ft. lbs.
Lock Nut Outer (1 gal.)	200 ft. lbs.
Lock Nut Outer (2½-15 g.)	275 ft. lbs.
Gas Valve Cap	10-15 in. lbs.

Bladder Assembly Part Numbers

Accumulator Size	Seal Type - 01 Nitrile (NBR)	- 04 Hydrin	- 06 Butyl	- 08 EPR	- 28 Fluorocarbon
3000 PSI - Standard - Ref. Figures A,B & C. Contains Items 2,3,4,18,19,20,25 & 26*					
10 Cu. In.	702900	702902	702903	702904	702906
1 Pt.	702914	702916	702917	702918	702920
1 Qt.**	702928	702930	702931	702932	702934
150 Cu. In.	702942	702944	702945	702946	702948
1 Gal.***	702956	702958	702959	702960	702962
2 1/2 Gal.	702970	702972	702973	702974	702976
5 Gal.	702984	702986	702987	702988	702990
10 Gal.	702998	703000	703001	703002	703004
11 Gal.	703012	703014	703015	703016	703018
15 Gal.	703026	703028	703029	703030	703032
25 Gal.	703340	704008	704009	703341	703342
40 Gal.	703346	704014	704015	703347	703348
5000 PSI - Ref. Figure D and contains Items 2,7,25 & 26					
2 1/2 Gal.	0870445025	0870485025	0870455025	0870475025	0870465025
5 Gal.	0870445050	0870485050	0870455050	0870475050	0870465050
10 Gal.	0870445100	0870485100	0870455100	0870475100	0870465100
15 Gal.	0870445150	0870485150	0870455150	0870475150	0870465150
5000 PSI - 2" Valve Stem Ref. Figure E Contains Items 2,7,25,26,28 & 30					
1 Gal. 7/8" ∅ Stem	8706135010	8706175010	8706145010	8706145010	8706155010
1 Gal. 1" ∅ Stem	704060	704062	704063	704064	704066
2 1/2 Gal.	706000	706002	706003	706004	706006
5 Gal.	706010	706012	706013	706014	706016
10 Gal.	706020	706022	706023	706024	706026
15 Gal.	707030	706032	706033	706034	706036
5000 PSI - Ref. Figure F Contains Items 2,7,25 & 26					
2 1/2 Gal.	0850695025	0856665025	0850705025	0851055025	0851045025
5 Gal.	0850695050	0856665050	0850705050	0851055050	0851045050
10 Gal.	0850695100	0856665100	0850705100	0851055100	0851045100
15 Gal.	0850695150	0856665150	0850705150	0851055150	0851045150

*See page140 for items 18-20.
**Contains items 2,3, & 4 as shown in Figure A. ***Contains items 2,3,4,18,19,25 & 26.

Gas Valve Assembly Part Numbers

Size	Pressure	Seal Type Buna-Nitrile -01	Butyl -06	Fluorocarbon -28	EPR -08	Hydrin -04
10 - 150 C.I.	3000 PSI	NA	NA	NA	NA	NA
1 - 15 Gal.†	3000 PSI	L074210001	L074210003	L074210005	L074210007	L074210009
25 - 40 Gal.▲	3000 PSI	L074400001	L074400003	L074400005	L074400007	L074400009
1 - 15 Gal.▲	5000 PSI	L074400001	L074400003	L074400005	L074400007	L074400009

† Contains items 3, 4, 25 & 26.
▲ Contains items 7, 25 & 26.

Accumulator Parts Description

Item No.	Description
1	Shell
8*	Oil Port Assembly
9**	Poppet & Plug Assembly
10	Oil Port (Machined)
11	Lock Nut Outer
12	Valve Poppet
13	Piston Poppet
14	Spacer
15	Anti-Extrusion Ring Assembly
16	Elastic Stop Nut
17	Spring Poppet
18	O-ring
19	O-ring Back-up
20	O-ring Back-up Metal
22***	Bleeder Plug
23	Dust Cap Oil Port
27	O-Ring (SAE Bleed Plug)

* Oil Port Assembly contains items 10 through 23.

** Port & Poppet Assembly contains items 10, 12, 13, 16, 17, 22 & 23.

*** Bleeder Plug for SAE straight thread port assemblies will also contain an o-ring (Item 27).

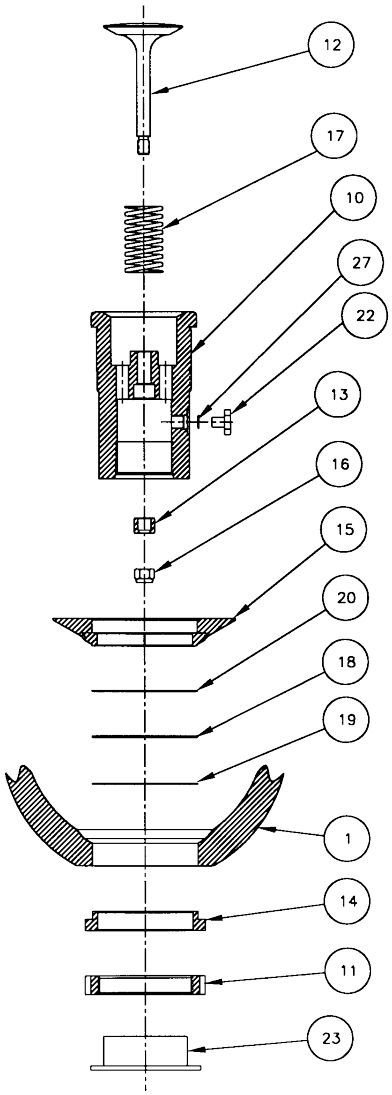

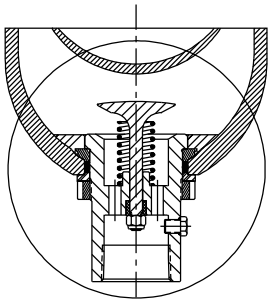

Accumulator Accessories

Description	Part No.
Pull Rod (1 Qt-2½ Gal)	085109 0250
Pull Rod (5 Gal)	085109 0500
Pull Rod (10-11 Gal)	085109 1000
Pull Rod (15 Gal)	085109 1500
Core Repair Tool	582441 0000
Core Installation Tool	300987
Spanner Wrench	085110 0000

Accumulator Repair Tools

1. Bladder Pull Rods—(Bladder Type Accumulator) Pull Rods are available in single or multiple lengths for different size accumulators. The pull rods attach to the gas valve of the bladder for ease of assembly into shell during reassembly.
2. Core Tool—The core tool is used to remove and reinstall the valve core. It is also used to ream valve seat and repair threads.
3. Spanner Wrench—Fits all standard size bladder accumulators. Used to remove hydraulic poppet assembly from accumulator shell.

Oil Port Assembly Part Numbers

3000 PSI Accumulators		Seal Type					Port & Poppet Assemblies
Accumulator Size	Port	-01 Buna-Nitrile	-04 Hydrin	-06 Butyl	-08 EPR	-28 Fluorocarbon	
10 Cu. In.	¾" NPT - Male	L076741*01	L076749*01	L076743*01	L076747*01	L076745*01	L076740*01
10 Cu. In.	SAE #8	L076741*02	L076749*02	L076743*02	L076747*02	L076745*02	L076740*02
1 Pt. - Qt.	¾" NPT	L075031*01	L075039*01	L075033*01	L075037*01	L075035*01	L075030*01
1 Pt. - Qt.	SAE #12	L075031*02	L075039*02	L075033*02	L075037*02	L075035*02	L075030*02
150 Cu. In.	1" NPT	L074151*01	L074159*01	L074153*01	L074157*01	L074155*01	L074350*01
150 Cu. In.	SAE #16	L074151*02	L074159*02	L074153*02	L074157*02	L074155*02	L074350*02
1 Gal.	1¼" NPT	L074161*01	L074169*01	L074163*01	L074167*01	L074165*01	L074360*01
1 Gal.	SAE #20	L074161*02	L074169*02	L074163*02	L074167*02	L074165*02	L074360*02
1 Gal.	1¼" SAE Split Flange	L074161*03	L074169*03	L074163*03	L074167*03	L074165*03	L074360*03
2½ - 15 Gal.	2" NPT	L074171*01	L074179*01	L074173*01	L074177*01	L074175*01	L074370*01
2½ - 15 Gal.	SAE #24	L074171*02	L074179*02	L074173*02	L074177*02	L074175*02	L074370*02
2½ - 15 Gal.	2" SAE Split Flange	L074171*03	L074179*03	L074173*03	L074177*03	L074175*03	L074370*03
2½ - 15 Gal.	1¼" NPT	L074171*04	L074179*04	L074173*04	L074177*04	L074175*04	L074370*04

* = "0" (Std.) Oil Service * = "S" Water/Chem. Service

Oil Port Assembly Part Numbers

330 Bar Accumulators		Seal Type					Port & Poppet Assembly
Accumulator Size	Port	-01 Buna-Nitrile	-04 Hydrin	-06 Butyl	-08 EPR	-28 Fluorocarbon	
0.16 Liter 0.16 Liter	3/4" NPT Male SAE # 8	Consult Factory					L076740*01 L076740*02
0.5 -1 Liter 0.5 -1 Liter	3/4" NPT SAE # 12						L075030*01 L075030*02
2.5 Liter 2.5 Liter 2.5 Liter	1" BSPP SAE # 16 Metric 33 x 2						E074350*02 E07435B*01 E07435M*01
4 Liter 4 Liter 4 Liter 4 Liter	1-1/4" BSPP SAE # 16 1-1/4" SAE Code 62 Metric 42 x 2						E074360*02 E07436B*01 E074360*03 E07436M*01
10 - 50 Liter 10 - 50 Liter 10 - 50 Liter 10 - 50 Liter	2" BSPP SAE # 24 1-1/2" SAE Code 62 Metric 48 x 2						E074370*02 E07437B*02 E074370*03 E07437M*01

** = "0" (Std.) Oil Service * = "S" Water/Chem. Service*

Accumulator Sizing and Selection Software

Parker offers leading edge application assistance, in the form of the InPHorm Accumulator Sizing and Selection Software or visit www.parker.com/accumulator for more information. For further product application assistance, contact Parker's Accumulator Technical Support Group at (815) 636-4100.

Accumulator Seals

Bladder accumulators are available for use with many operating medias. Fluid should be a non-dangerous liquid as well as precharged with an inert gas such as nitrogen.

Water & Chemical Service Option (W)

Bladder accumulators are available with a water and chemical resistance options. The (W) designation includes an internally Skotchkoted shell and stainless steel port assembly. The Skotchkote offers added protection against more corrosive fluids. Consult factory for details.

Bladder Storage

The shelf life of bladders under normal storage conditions is 1 year. However, this period can be extended to 2 years, if the storage conditions are improved.

Normal storage condition consists of the bladder being heat sealed in a black plastic bag and placed in a cool dry place away from sun, ultraviolet and fluorescent light that can cause the bladder to weather check and dry rot, which appear on the bladder surface as cracks.

Extended life can be achieved by having the bladder charged with nitrogen to its full size, and placing it in a heat sealed 5 mil thick black plastic bag. The air in the plastic bag shall be purged using nitrogen prior to sealing. The bag must then be placed in an appropriate size cardboard box, sealed and kept in a cool and dry place away from sunlight and ozone producing equipment.

"U" Bolts for Piston & Bladder-Type Accumulators

Accumulator Models (3000 PSI) Bladder Size	"U" Bolt Part Number	Dimensions						Wt. (lbs.)
		A	B	C	D	E	Thrd.	
1 Pint	0862090000	1/2	3-11/16	4-1/16	3-5/8	2	3/8-16	0.9
1 Quart	0854380000	1/2	4-5/8	5-1/8	4-1/2	3	1/2-13	1.2
1 Gallon	0854390000	5/8	6-3/4	7	6-1/8	3-3/4	5/8-11	2.4
2½ -15 Gal.	0853360000	5/8	9.0	9-5/8	7-1/8	3-3/4	5/8-11	3.0

Bladder-Type Accumulator

Bladder-type accumulators should be mounted vertically with the hydraulic port down.

CAUTION: Bladder-type accumulators should never be mounted more than 25° angle from the vertical.

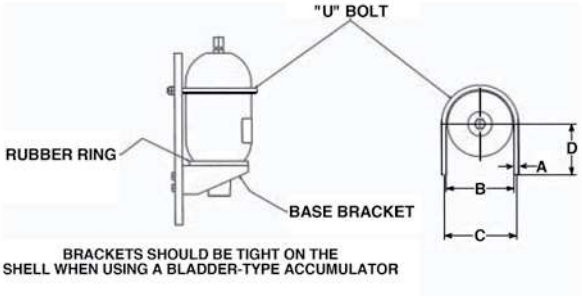

Base Bracket Assembly for Bladder Accumulators

Accumulator Models Bladder Size	Base Bracket Assembly Part Number	Dimensions								Wt. Lbs.
		A	B	C	D	E	F	G	H	
1 Gal. (3K)	1449100000	10.3	7.87	3.62	4.75	8.87	3.85	1.58	0.65 x .87	5
2½ -15 Gal. (3K)	1448720000	10.3	7.87	4.84	6.75	8.87	3.85	1.58	0.65 x .87	5

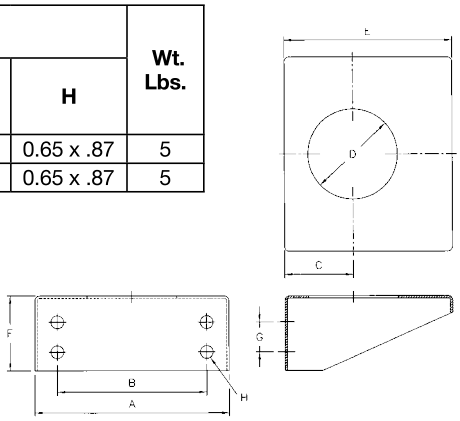

Clamp Brackets for Small Bladder Accumulators

Bladder Size Cubic Inches	Part No.	Dimensions				
		A	B	C	D	H
10	8700110238	4.25	3.35	4.29	2.25 / 2.41	1.58
30	8700110358	5.00	3.94	5.62	3.50 / 3.62	2.28

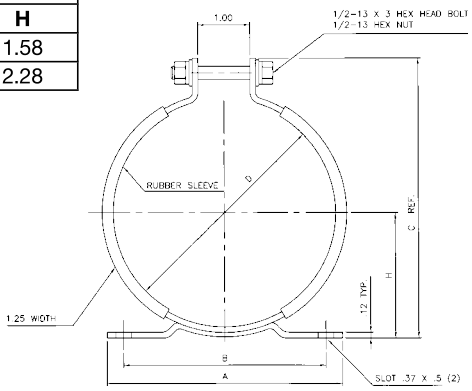

Maint.

Clamp Brackets for Bladder-Type Accumulators

Bladder Size	Clamp Part No.	Dimensions							Wt. Lbs.
		A	B	C Max.	D Max.	E	F	G	
1 Qt., 150 C.I. (Figure A)	1466230000	4.5	3.9	5.5	6.3	2.6	.35 x .51	1.2	1.8
1 Gal. (Figure A)	1449080000	6.8	6.3	7.6	8.5	3.6	.35 x .51	1.2	2.7
2½ - 15 Gal. (3K) (Figure B)	1449070000	9.0	8.5	10.0	11.7	4.8	.50 x .75	1.2	4.2
2½ - 15 Gal. (5K) (Figure B)	1349200000	9.5	8.5	10.5	12.0	5.4	.50 x .75	1.2	4.5

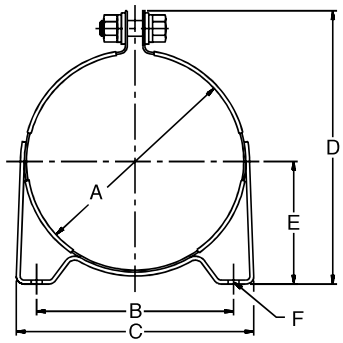

Figure A

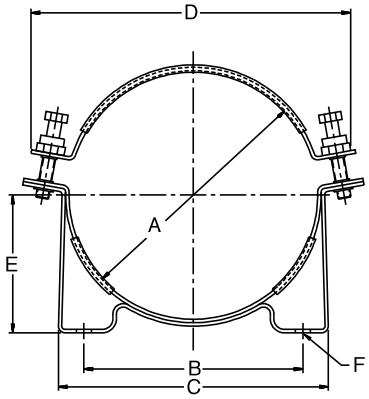

Figure B

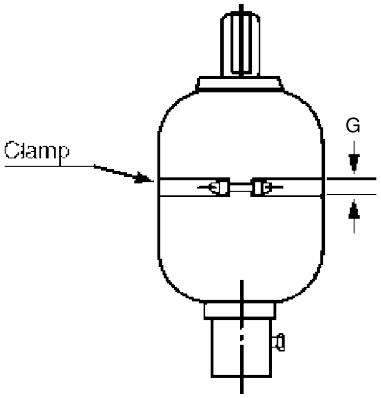

Series "AD" Diaphragm Accumulators

Maintenance Instructions

- .075 to 2.80 Liters
- Operating Pressures to 250 Bar
- Hydrin Diaphragms

Installation

Keep the hydraulic port covered to keep out foreign material until ready to make the hydraulic connection. The accumulator should be rigidly mounted using appropriate mounting hardware, which is shown in the Accumulator Accessories section of this catalog. The hydraulic circuit, which contains a connection to the accumulator, should be designed so that it automatically discharges all hydraulic fluid from the accumulator when the equipment is turned off.

Pre-Charging Diaphragm Accumulators

Use an inert gas such as nitrogen for pre-charging accumulators.

If water pumped nitrogen is not available, oil-pumped nitrogen may be used. (C.G.A. standards: Nitrogen gas bottles for water pumped nitrogen has a right-hand valve thread which requires charging and gauging assembly 1486750000 for units up to 3600 PSI. Oil-pumped nitrogen requires a left-handed valve thread (use 8700430000).

If equipment other than the above listed is used, make sure it is compatible with the gas valve assembly. Nitrogen source and all components must be rated for a pressure at least as high as the nitrogen source. It is **strongly recommended** that the nitrogen bottle used have a high pressure regulator.

Make sure nitrogen supply is shut off. Attach hose to nitrogen bottle. If accumulator has a gas valve as shown in Figure 5 follow steps A through K If accumulator has a gas valve as shown in Figure 6, skip steps A through J and follow steps AA through JJ. Before starting, lubricate the shell and bladder by placing a small amount of system fluid in the oil port and rotate the accumulator a few times.

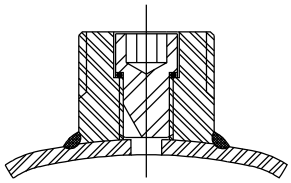

Figure 5

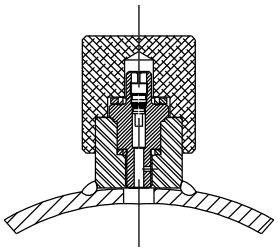

Figure 6

Accumulator having gas valve as per Figure 5.

(A) Remove protective cover. Refer to Figure 1.

(B) Turn charging device “T” handle (2) all the way in (clockwise) before attaching charging assembly.

(C) Close bleed valve (3).

(D) Making sure not to loop or twist the hose, attach nut (4) to gas valve and tighten.

(E) Attach swivel nut (5) to gas valve (6) and tighten.

(F) Turn “T” handle (2) in counterclockwise motion until rotation stops.

(G) Crack open nitrogen bottle valve and **slowly** fill accumulator until the button is seated on the fluid port opening, then the nitrogen supply may be fully opened. Shut off the nitrogen supply when the gauge indicates 110% of desired pre-charge.

(H) Let the pre-charge set for 1 to 2 minutes. This will allow the gas temperature to stabilize. Slowly open bleed valve (3) until the proper pressure is reached, then close the bleed valve (3).

(I) When finished pre-charging accumulator, turn the “T” handle (2) clockwise all the way, then open bleed valve (3) to bleed the residual pressure from the charging device.

(J) Holding the “T” handle (2) to keep from turning, loosen nut (4), and remove the assembly from the accumulator.

(K) Torque the Allen head screw to 14.5 ft-lb +3 (20 Nm +5).

(L) Replace protective cap.

Note: For the most accurate results, use a gauge where the middle 1/3 of the gauge range encompasses the final precharge pressure.

Note: To ensure the most accuracy, use a temperature/ precharge correction chart or program.

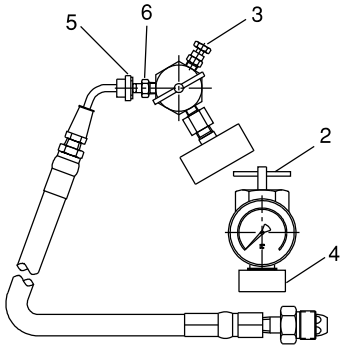

Figure 1

Precharging Diaphragm Accumulator having gas valve as per Figure 6.

(AA) Remove gas valve guard (A) and secondary seal (B) from the accumulator. Refer to Figure 2.

(BB) Torque the gas valve to 9 ft-lbs + 1 (11.5 Nm + 1.3).

(CC) On the charging device back the gas chuck (2) “T” handle all the way out (counterclockwise) before attaching the chuck to the Diaphragm accumulator.

(DD) Make sure the bleed valve (3) is closed and tight.

(EE) Making sure not to loop or twist the hose, attach the Swivel Connector (5) to the charging device gas valve (4) and tighten. (10-15 in lbs (11.5-17 cm kg))

(FF) Turn the “T” handle (2) clockwise all the way. This action will depress the valve core.

(GG) Crack open nitrogen bottle valve and slowly fill the accumulator until the button is seated on the fluid port opening, then the nitrogen supply may be fully opened. Shut off the nitrogen supply when gauge movement stops and indicates 110% of desired pre-charge level.

(HH) Let the pre-charge set for 1 to 2 minutes. This will allow the gas temperature to stabilize. Slowly open bleed valve (3) until the proper pressure is reached.

(II) When finished precharging, turn “T” handle (2) counterclockwise fully, then open the bleed valve (3) to release residual gas.

(JJ) Hold the gas valve from turning and remove the charging device.

(KK) Install secondary seal (B) and valve guard (A).

Note: For the most accurate results, use a gauge where the middle 1/3 of the gauge range encompasses the final precharge pressure.

Note: To ensure the most accuracy, use a temperature/ precharge chart or program.

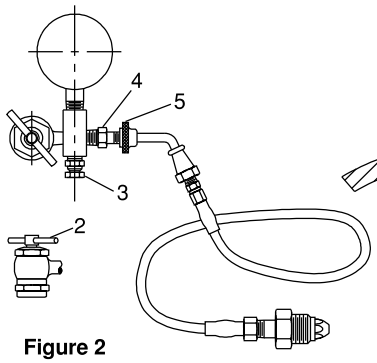

Figure 2

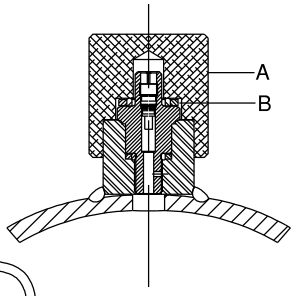

Figure 6

Pre-charge Checking Procedure

For diaphragm units having a gas valve configured like Figure 5

Caution: Use this procedure only if the accumulator volume is equal to or more than 30 cubic inches in gas volume. For smaller volumes see the procedure for accumulators smaller than 30 cubic inch capacity.

Using appropriate valve in the hydraulic system, discharge all oil from accumulator and allow button to bottom against hydraulic port. Use precharge checking device P/N 1480240000 with proper gauge.

(A) Remove protective cover from accumulator.

(B) Refer to Figure 3. Turn the charging device “T” handle (2) all the way in (clockwise) attach charging and gauging head assembly by screwing mounting nut (4) to the gas end of the Diaphragm accumulator.

(C) Close bleed valve (3).

(D) Turn “T” handle (2) in counterclockwise motion until rotation stops.

(E) When finished checking the precharge, turn “T” handle (2) clockwise all the way, then open bleed valve (3) to bleed all residual pressure from the charging device.

(F) Hold “T” handle (2) to keep from turning, loosen nut (4), remove the assembly from the accumulator.

(G) Torque the Allen head screw to 14.5 ft-lb + 3 (20 Nm + 9).

(H) Replace protective cap.

Note: For the most accurate results, use a gauge where the middle 1/3 of the gauge range encompasses the final precharge pressure.

Note: To ensure the most accuracy, use a temperature/ precharge chart or program.

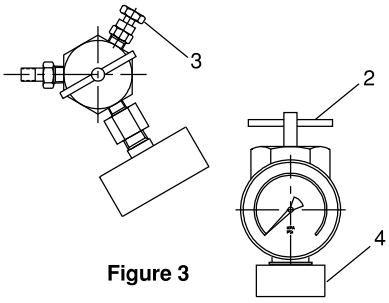

Figure 3

For diaphragm units having a gas valve configured like Figure 6

Caution: Use this procedure only if the accumulator volume is equal to or more than 30 cubic inches in gas volume. For smaller volumes see the procedure for accumulators smaller than 30 cu. in.

Using appropriate valve in the hydraulic system, discharge all oil from accumulator and allow button to bottom against hydraulic port. Use precharge checking device P/N 0851220000 with gauge.

(A) Remove protective cover (A) and the secondary seal (B) from the Diaphragm accumulator. Check torque on the gas valve to be 9 ft-lbs (10.3 cm kg).

(B) Refer to Figure 4. Back gas chuck “T” handle (2) all the way out (counter clockwise), attach charging and gauging head assembly by screwing the air chuck (2) to the valve stem of the Diaphragm accumulator and tighten (10-15 in lbs) (11.5-17 cm kg).

(C) Close bleed valve (3).

(D) Turn “T” handle (2) in clockwise motion.

(E) When finished checking the precharge, turn “T” handle (2) counterclockwise all the way, then open bleed valve (3).

(F) Using a wrench to prevent the gas valve assembly from rotating, remove the charging assembly from the accumulator.

(G) Replace secondary seal (B) and protective cap (A).

Note: For the most accurate results, use a gauge where the middle 1/3 of the gauge range encompasses the final precharge pressure.

Note: To ensure the most accuracy, use a temperature/ precharge chart or program.

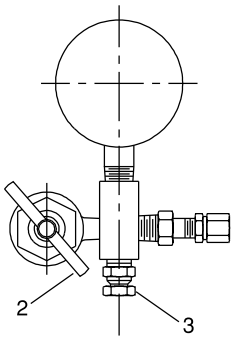

Figure 4

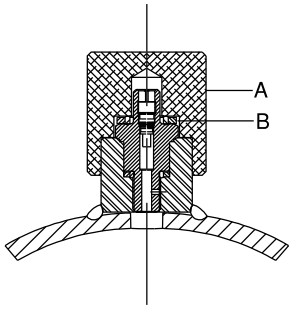

Figure 6

To check the precharge on units having a gas volume of less than 30 cu in.

It is recommended that that the precharge be checked from the hydraulic port. Using this method will prevent the loss of gas volume necessary to get a precharge reading when using standard gas port mounted devices. This loss is attributable to the required gas volume filling the charging device thereby removing some volume from the accumulator. This removal causes a precharge drop due to the volume in the accumulator being so small.

Using the setup shown below in Figure 7, take the following steps to check the precharge.

If you wish to take a less accurate reading you may use the previously described methods, but be sure to have a nitrogen supply available to replenish the gas that will be lost during the precharge check.

(A) Connect the accumulator fluid port to the pump discharge line.

(B) Ensure that all fittings are tight and leakproof.

(C) Bring hydraulic pressure up until the precharge is exceeded. You will know the precharge is exceeded when the resistance decreases and the gauge rise quickens.

(D) Stop pumping and allow the pressure to stabilize.

(E) Slowly crack the needle valve open until you see a very slow drop in pressure on the gauge.

(F) At the gauge reading where the slow decent stops and a rapid descent starts is the precharge pressure in the accumulator.

(G) It is recommended to take multiple readings to ensure accuracy of the reading.

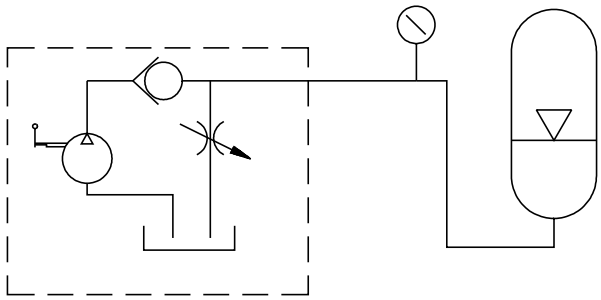

Figure 7

Removal from Hydraulic System

Shut the equipment down and make certain that hydraulic not pressure at the accumulator is at zero.

For accumulators having gas valve as shown in Figure 5, attach gauging assembly as shown in Figure 3 following Steps A through D. Then, open bleed valve (3) until all gas pre-charge is relieved from accumulator. Then remove gauging assembly. The accumulator is now safe to remove from the system.

For accumulators having gas valve as shown in Figure 6, attach gauging assembly as shown in Figure 4 following Steps A through D. Then, open bleed valve (3) until all gas pre-charge is relieved from accumulator. Then remove gauging assembly. The accumulator is now safe to remove from the system.

Pulse-Tone™ Inline Surge Supressors

Maintenance Instructions

Parker Hannifin
Global Accumulator Division
United States

Installation Tips

1. Either end of the Inline Pulse-Tone can serve as inlet or outlet.
2. For pump pulsation suppression and pump noise reduction, mount the Inline Pulse-Tone directly at the outlet of the pump. The noise reduction will occur when the pump pressure exceeds the precharge pressure of the suppressor. The Inline Pulse-Tone is usually precharged to 50% of the system pressure.
3. For vibration dampening, mount the Inline Pulse-Tone as close as possible to the pump outlet since the pump is usually the source of the vibrations.
4. For shock dampening, mount the Inline Pulse-Tone as close as possible to the source of the shock.
5. The precharge pressure should be checked once every three months.
6. Do not leave the charging and gauging assembly permanently mounted to the top of the Inline Pulse-Tone in an attempt to monitor the precharge pressure.
7. Always close the hex nut #2 on the charging valve in order to seal the precharge in the Inline Pulse-Tone.
8. The T handle on the charging and gauging assembly serves no purpose when either charging or checking precharge. It is only used when working with accumulators.

Important Notice

The charging valve used on the Inline Pulse-Tone is a high-flow valve. It is opened and closed by the hex nut (#2). Turn this nut counterclockwise to open the passage to the nitrogen chamber and clockwise to close the passage to the nitrogen. If the nut is not turned, nitrogen cannot enter or leave the suppressor. During suppressor operation, this nut must always be in the closed position.

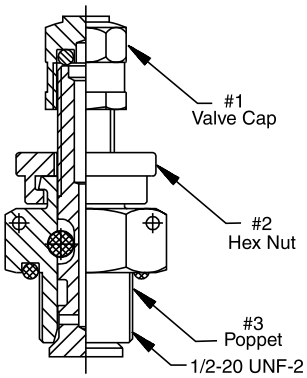

Checking the Precharge

1. Remove the valve cap (#1) from the Inline Pulse-Tone valve.
2. Install the charging and gauging assembly onto the Inline Pulse-Tone valve. Make sure all connections are tight.
3. Turn the swivel hex (#2) counterclockwise approximately 4-1/2 turns to open the poppet (#3). You can now read the nitrogen charge on the pressure gauge.
4. After reading the nitrogen charge, turn the swivel hex nut (#2) clockwise 4-1/2 turns.
5. Torque to approximately 50 to 70 inch/lbs.
6. Remove the charging and gauging assembly from the Inline Pulse-Tone.
7. Install the valve cap (#1).

Charging the Inline Pulse-Tone

Use only inert gas such as nitrogen for pre-charging the Inline Pulse-Tone. If possible, use water pumped nitrogen (gas bottle will have a right-hand thread). Oil pumped nitrogen may be used; however, gas bottle will have a left-hand thread. All components must be rated for a pressure at least as high as the nitrogen source. **It is strongly recommended that the nitrogen bottle used have a high pressure regulator.**

Make sure nitrogen supply is shut off. Attach hose to nitrogen bottle.

1. Remove the valve cap (#1) from the Inline Pulse-Tone valve. Turn the swivel hex nut (#2) counterclockwise approximately 4-1/2 turns open the poppet (#3).
2. Connect the charging and gauging assembly to the Inline Pulse-Tone valve. Since the Inline Pulse-Tone valve does not have a core, there is no need to utilize the 'T' handle on the gas chuck.
3. Open the valve on the nitrogen bottle slowly and allow the pressure to build to the desired level.
4. When you reach the required pressure level, close the valve on the nitrogen bottle.
5. Turn the swivel hex nut (#2) on the Inline Pulse-Tone valve clockwise approximately 4-1/2 turns to close the valve poppet.
6. When the poppet has seated, apply approximately 50 to 70 inch/lbs of torque.
7. Open the bleeder valve on charging and gauging assembly to vent the gas in the charging hose.
8. Remove the charging and gauging assembly from the Inline Pulse-Tone valve.
9. Install the valve cap (#1).

Disassembly

To vent precharge

1. Remove valve cap (#1).
2. Turn swivel hex nut (#2) counterclockwise approximately 4½ turns to open poppet (#3).
3. Precharge will vent to atmosphere.

Charging Valve

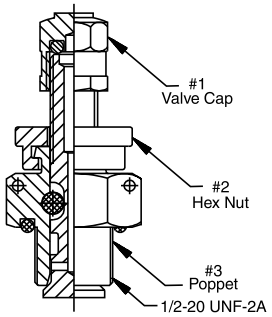

To Disassemble the Inline Pulse-Tone

1. Make certain to vent the gas charge before attempting to disassemble the Inline Pulse-Tone. Refer to above venting procedure. Leave the charging valve in open position.
2. Place the Inline Pulse-Tone in a vise or fixture. With a spanner wrench or dowel pins, remove one of the end ports.
3. Turn the Inline Pulse-Tone 180° in the vise or fixture and remove the other end port.
4. Push the diffuser tube out one end of the body.
5. With a screwdriver or other flat device, remove the flanges of the bladder from their grooves and push the bladder out one end of the steel body.
6. There is usually no need to remove the charging valve.

Assembly

1. Visually inspect and clean all parts prior to assembly.
2. Place end port o-rings (#50) in the grooves of the end ports (#60). Lubricate the o-rings and the face of the end port that comes in contact with the bladder with Superlube grease provided or a PTFE base grease.
3. Place the tube o-rings (#40) over the ends of the diffuser tube (#70). Lubricate the o-rings to hold them in position.
4. Place the tube face o-ring (#30) on the proper end of the diffuser tube (#70) as shown in the sketch below. Lubricate the o-ring to hold it in position.
5. Insert the bladder (#80) into the steel body (#10). the flanges at the ends of the bladder must be properly seated in the grooves in the steel body. ***Do not lubricate the bladder at this time.***
6. After installing the bladder and it is properly seated in the steel body, lubricate the inside diameter of the ends of the bladder with Superlube grease provided.
7. Place one end port (#60) in a vise or fixture to hold it during assembly. Make certain that the face of the end port is properly lubricated. Place the steel body (#10) over the end port and thread it onto the end port until you have metal to metal contact.
8. Lubricate the outside diameter of the diffuser tube (#70) with hydraulic oil and insert it into the inside diameter of the bladder which is installed in the steel body.
9. Thread the second end port into the open end of the steel body until you have metal to metal contact.
10. With a Spanner wrench or dowel pins, tighten each end port approximately another 5°.
11. Thread the charging valve part (#20) into the port on the steel body (#10). The charging valve has an o-ring at the base of the valve to seal between the valve port and the steel body. Lightly oil the o-ring to hold it in position while installing the valve.

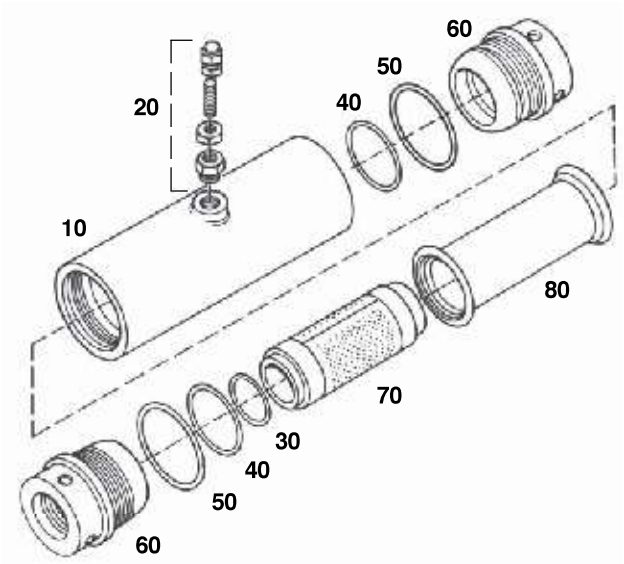

10	Body
20	Charging Valve
30	Tube Face O-Ring
40	Tube O.D. O-Ring
50	End Port O-Ring
60	End Port
70	Diffuser
80	Bladder

Gas Chuck Disassembly

The use of safety glasses during the disassembly of the gas chuck is recommended.

1) Insert the head of a flat screwdriver at one edge of the retaining ring opening and slowly begin to remove the retaining ring.

   Caution:
   The retaining ring will spring out of the groove once half of it has been moved out of the groove. Hold the ring with one finger to avoid loosing it.

2) Remove the external hexagon shaped sleeve and the two internal round sleeves to reach the copper washer.

3) Replace the damaged washer with a new one, part number 5824390000.

   Note:
   The washer should drop out of the groove by it self. Otherwise, use a small screwdriver to remove it if necessary.

4) Reassemble the sleeves.

5) Reassemble the retaining ring back into the groove using a small screwdriver.

6) Due to the low cost of replacing an entire gas chuck, we encourage you to replace this entire assembly instead of replacing the washer, 5824390000.

   Caution:
   Make sure that the retaining ring is completely seated into the groove prior to reusing the gas chuck. If the retaining ring is damaged, replace the entire gas chuck.

Temperature Variation

Temperature variation can seriously affect the precharge pressure of an accumulator. As the temperature increases, the precharge pressure increases; conversely, decreasing temperature will decrease the precharge pressure. In order to assure the accuracy of your accumulator precharge pressure, you need to factor in the temperature variation. The temperature variation factor is determined by the temperature encountered during precharge versus the operating temperature expected in the system.

Temperature During Precharge

	30.	40.	50.	60.	70.	80.	90.	100.	110.	120.	130.	140.	150.	160.	170.	180.	190.	200.	210.	220.
30.	1.00	1.02	1.04	1.06	1.08	1.10	1.12	1.14	1.16	1.18	1.20	1.22	1.24	1.27	1.29	1.31	1.33	1.35	1.37	1.39
40.	.98	1.00	1.02	1.04	1.06	1.08	1.10	1.12	1.14	1.16	1.18	1.20	1.22	1.24	1.26	1.28	1.30	1.32	1.34	1.36
50.	.94	.98	1.00	1.02	1.04	1.06	1.08	1.10	1.12	1.14	1.16	1.18	1.20	1.22	1.24	1.25	1.27	1.29	1.31	1.33
60.	.92	.94	.98	1.00	1.02	1.04	1.06	1.08	1.10	1.12	1.13	1.15	1.17	1.19	1.21	1.23	1.25	1.27	1.29	1.31
70.	.92	.94	.96	.98	1.00	1.02	1.04	1.06	1.08	1.09	1.11	1.13	1.15	1.17	1.19	1.21	1.23	1.25	1.26	1.28
80.	.91	.93	.94	.96	.98	1.00	1.02	1.04	1.06	1.07	1.09	1.11	1.13	1.15	1.17	1.19	1.20	1.22	1.24	1.25
90.	.89	.91	.93	.95	.96	.98	1.00	1.02	1.04	1.05	1.07	1.09	1.11	1.13	1.15	1.16	1.18	1.20	1.22	1.24
100.	.88	.89	.91	.93	.95	.96	.98	1.00	1.02	1.04	1.05	1.07	1.09	1.11	1.13	1.14	1.16	1.18	1.20	1.21
110.	.86	.88	.89	.91	.93	.95	.96	.98	1.00	1.02	1.04	1.05	1.07	1.09	1.11	1.12	1.14	1.16	1.18	1.19
120.	.84	.86	.88	.90	.91	.93	.95	.97	.98	1.00	1.02	1.03	1.05	1.07	1.09	1.10	1.12	1.14	1.16	1.17
130.	.83	.85	.86	.88	.90	.92	.93	.95	.97	.98	1.00	1.02	1.03	1.05	1.07	1.08	1.10	1.12	1.14	1.15
140.	.82	.83	.85	.87	.88	.90	.92	.93	.95	.97	.98	1.00	1.02	1.03	1.05	1.07	1.08	1.10	1.12	1.13
150.	.80	.82	.84	.85	.87	.89	.90	.92	.93	.95	.97	.98	1.00	1.02	1.03	1.05	1.07	1.08	1.10	1.11
160.	.79	.81	.82	.84	.85	.87	.89	.90	.92	.94	.95	.97	.98	1.00	1.02	1.03	1.05	1.06	1.08	1.10
170.	.78	.79	.81	.83	.84	.86	.87	.89	.90	.92	.94	.95	.97	.98	1.00	1.02	1.03	1.05	1.06	1.08
180.	.77	.78	.80	.81	.83	.84	.86	.88	.89	.91	.92	.94	.95	.97	.98	1.00	1.02	1.03	1.05	1.06
190.	.75	.77	.78	.80	.82	.83	.85	.86	.88	.89	.91	.92	.94	.95	.97	.98	1.00	1.02	1.03	1.05
200.	.74	.76	.77	.79	.80	.82	.83	.85	.86	.88	.89	.91	.92	.94	.95	.97	.98	1.00	1.02	1.03
210.	.73	.75	.76	.78	.79	.81	.82	.84	.85	.87	.88	.90	.91	.93	.94	.96	.97	.99	1.00	1.01
220.	.72	.74	.75	.76	.78	.79	.81	.82	.84	.85	.87	.88	.90	.91	.93	.94	.96	.97	.99	1.00

Let's assume the temperature during precharge is 70°F, the expected operating temperature is 130°F, and your desired precharge is 1000 PSI. Find the charging temperature of 70°F in the top horizontal row. Next, find the operating temperature of 130°F in the left hand, vertical column. Extend lines from each value until they intersect to find the temperature variation factor; in this case, 0.90. Multiply the desired precharge of 1000 PSI by the temperature variation factor of 0.90 to obtain the actual precharge pressure required – 900 PSI.

Notes

Parker Hannifin
Global Accumulator Division
United States

Notes

Parker Hannifin
Global Accumulator Division
United States

Offer of Sale

The items described in this document and other documents or descriptions provided by Parker Hannifin Corporation, its subsidiaries and its authorized distributors are hereby offered for sale at prices to be established by Parker Hannifin Corporation, its subsidiaries and its authorized distributors. This offer and its acceptance by any customer ("Buyer") shall be governed by all of the following Terms and Conditions. Buyer's order for any such items, when communicated to Parker Hannifin Corporation, its subsidiary or an authorized distributor ("Seller") verbally or in writing, shall constitute acceptance of this offer.

1. Terms and Conditions of Sale: All descriptions, quotations, proposals, offers, acknowledgments, acceptances and sales of Seller's products are subject to and shall be governed exclusively by the terms and conditions stated herein. Buyer's acceptance of any offer to sell is limited to these terms and conditions. Any terms or conditions in addition to, or inconsistent with those stated herein, proposed by Buyer in any acceptance of an offer by Seller, are hereby objected to. No such additional, different or inconsistent terms and conditions shall become part of the contract between Buyer and Seller unless expressly accepted in writing by Seller. Seller's acceptance of any offer to purchase by Buyer is expressly conditional upon Buyer's assent to all the terms and conditions stated herein, including any terms in addition to, or inconsistent with those contained in Buyer's offer, Acceptance of Seller's products shall in all events constitute such assent.

2. Payment: Payment shall be made by Buyer net 30 days from the date of delivery of the items purchased hereunder. Amounts not timely paid shall bear interest at the maximum rate permitted by law for each month or portion thereof that the Buyer is late in making payment. Any claims by Buyer for omissions or shortages in a shipment shall be waived unless Seller receives notice thereof within 30 days after Buyer's receipt of the shipment.

3. Delivery: Unless otherwise provided on the face hereof, delivery shall be made F.O.B. Seller's plant. Regardless of the method of delivery, however, risk of loss shall pass to Buyer upon Seller's delivery to a carrier. Any delivery dates shown are approximate only and Seller shall have no liability for any delays in delivery.

4. Warranty: Seller warrants that the items sold hereunder shall be free from defects in material or workmanship for a period of 18 months from date of shipment from Parker Hannifin Corporation. **THIS WARRANTY COMPRISES THE SOLE AND ENTIRE WARRANTY PERTAINING TO ITEMS PROVIDED HEREUNDER. SELLER MAKES NO OTHER WARRANTY, GUARANTEE, OR REPRESENTATION OF ANY KIND WHATSOEVER. ALL OTHER WARRANTIES, INCLUDING BUT NOT LIMITED TO, MERCHANTABILITY AND FITNESS FOR PURPOSE, WHETHER EXPRESS, IMPLIED, OR ARISING BY OPERATION OF LAW, TRADE USAGE, OR COURSE OF DEALING ARE HEREBY DISCLAIMED. NOTWITHSTANDING THE FOREGOING, THERE ARE NO WARRANTIES WHATSOEVER ON ITEMS BUILT OR ACQUIRED WHOLLY OR PARTIALLY, TO BUYER'S DESIGNS OR SPECIFICATIONS.**

5. Limitation Of Remedy: SELLER'S LIABILITY ARISING FROM OR IN ANY WAY CONNECTED WITH THE ITEMS SOLD OR THIS CONTRACT SHALL BE LIMITED EXCLUSIVELY TO REPAIR OR REPLACEMENT OF THE ITEMS SOLD OR REFUND OF THE PURCHASE PRICE PAID BY BUYER, AT SELLER'S SOLE OPTION. IN NO EVENT SHALL SELLER BE LIABLE FOR ANY INCIDENTAL, CONSEQUENTIAL OR SPECIAL DAMAGES OF ANY KIND OR NATURE WHATSOEVER, INCLUDING BUT NOT LIMITED TO LOST PROFITS ARISING FROM OR IN ANY WAY CONNECTED WITH THIS AGREEMENT OR ITEMS SOLD HEREUNDER, WHETHER ALLEGED TO ARISE FROM BREACH OF CONTRACT, EXPRESS OR IMPLIED WARRANTY, OR IN TORT, INCLUDING WITHOUT LIMITATION, NEGLIGENCE, FAILURE TO WARN OR STRICT LIABILITY.

6. Changes, Reschedules and Cancellations: Buyer may request to modify the designs or specifications for the items sold hereunder as well as the quantities and delivery dates thereof, or may request to cancel all or part of this order, however, no such requested modification or cancellation shall become part of the contract between Buyer and Seller unless accepted by Seller in a written amendment to this Agreement. Acceptance of any such requested modification or cancellation shall be at Seller's discretion, and shall be upon such terms and conditions as Seller may require.

7. Special Tooling: A tooling charge may be imposed for any special tooling, including without limitation, dies, fixtures, molds and patterns, acquired to manufacture items sold pursuant to this contract. Such special tooling shall be and remain Seller's property notwithstanding payment of any charges by Buyer. In no event will Buyer acquire any interest in apparatus belonging to Seller which is utilized in the manufacture of the items sold hereunder, even if such apparatus has been specially converted or adapted for such manufacture and notwithstanding any charges paid by Buyer. Unless otherwise agreed, Seller shall have the right to alter, discard or otherwise dispose of any special tooling or other property in its sole discretion at any time.

8. Buyer's Property: Any designs, tools, patterns, materials, drawings, confidential information or equipment furnished by Buyer or any other items which become Buyer's property, may be considered obsolete and may be destroyed by Seller after two (2) consecutive years have elapsed without Buyer placing an order for the items which are manufactured using such property, Seller shall not be responsible for any loss or damage to such property while it is in Seller's possession or control.

9. Taxes: Unless otherwise indicated on the face hereof, all prices and charges are exclusive of excise, sales, use, property, occupational or like taxes which may be imposed by any taxing authority upon the manufacture, sale or delivery of the items sold hereunder. If any such taxes must be paid by Seller or if Seller is liable for the collection of such tax, the amount thereof shall be in addition to the amounts for the items sold. Buyer agrees to pay all such taxes or to reimburse Seller therefore upon receipt of its invoice. If Buyer claims exemption from any sales, use or other tax imposed by any taxing authority, Buyer shall save Seller harmless from and against any such tax, together with any interest or penalties thereon which may be assessed if the items are held to be taxable.

10. Indemnity For Infringement of Intellectual Property Rights: Seller shall have no liability for infringement of any patents, trademarks, copyrights, trade dress, trade secrets or similar rights except as provided in this Part 10. Seller will defend and indemnify Buyer against allegations of infringement of U.S. Patents, U.S. Trademarks, copyrights, trade dress and trade secrets (hereinafter 'Intellectual Property Rights'). Seller will defend at its expense and will pay the cost of any settlement or damages awarded in an action brought against Buyer based on an allegation that an item sold pursuant to this contract infringes the Intellectual Property Rights of a third party. Seller's obligation to defend and indemnify Buyer is contingent on Buyer notifying Seller within ten (10) days after Buyer becomes aware of such allegations of infringement, and Seller having sole control over the defense of any allegations or actions including all negotiations for settlement or compromise. If an item sold hereunder is subject to a claim that it infringes the Intellectual Property Rights of a third party, Seller may, at its sole expense and option, procure for Buyer the right to continue using said item, replace or modify said item so as to make it noninfringing, or offer to accept return of said item and return the purchase price less a reasonable allowance for depreciation. Notwithstanding the foregoing, Seller shall have no liability for claims of infringement based on information provided by Buyer, or directed to items delivered hereunder for which the designs are specified in whole or part by Buyer, or infringements resulting from the modification, combination or use in a system of any item sold hereunder. The foregoing provisions of this Part 10 shall constitute Seller's sole and exclusive liability and Buyer's sole and exclusive remedy for infringement of Intellectual Property Rights. If a claim is based on information provided by Buyer or if the design for an item delivered hereunder is specified in whole or in part by Buyer, Buyer shall defend and indemnify Seller for all costs, expenses or judgments resulting from any claim that such item infringes any patent, trademark, copyright, trade dress, trade secret or any similar right.

11. Force Majeure: Seller does not assume the risk of and shall not be liable for delay or failure to perform any of Seller's obligations by reason of circumstances beyond the reasonable control of Seller (hereinafter 'Events of Force Majeure'). Events of Force Majeure shall include without limitation, accidents, acts of God, strikes or labor disputes, acts, laws, rules or regulations of any government or government agency, fires, floods, delays or failures in delivery of carriers or suppliers, shortages of materials and any other cause beyond Seller's control.

12. Entire Agreement/Governing Law: The terms and conditions set forth herein, together with any amendments, modifications and any different terms or conditions expressly accepted by Seller in writing, shall constitute the entire Agreement concerning the items sold, and there are no oral or other representations or agreements which pertain thereto. This Agreement shall be governed in all respects by the law of the State of Ohio. No actions arising out of the sale of the items sold hereunder or this Agreement may be brought by either party more than two (2) years after the cause of action accrues.

9/2010-P

Parker's Motion & Control Product Groups

At Parker, we're guided by a relentless drive to help our customers become more productive and achieve higher levels of profitability by engineering the best systems for their requirements. It means looking at customer applications from many angles to find new ways to create value. Whatever the motion and control technology need, Parker has the experience, breadth of product and global reach to consistently deliver. No company knows more about motion and control technology than Parker. For further info call 1 800 C-Parker (1 800 272 7537)

Aerospace

Key Markets
Aftermarket services
Commercial transports
Engines
General & business aviation
Helicopters
Launch vehicles
Military aircraft
Missiles
Power generation
Regional transports
Unmanned aerial vehicles

Key Products
Control systems & actuation products
Engine systems & components
Fluid conveyance systems & components
Fluid metering, delivery & atomization devices
Fuel systems & components
Fuel tank inerting systems
Hydraulic systems & components
Thermal management
Wheels & brakes

Automation

Key Markets
Renewable energy
Conveyor & material handling
Factory automation
Food & beverage
Life sciences & medical
Machine tools
Packaging machinery
Paper machinery
Plastics machinery
Primary metals
Safety & security
Semiconductor & electronics
Transportation & automotive

Key Products
AC/DC drives & systems
Air preparation
Electric actuators, gantry robots & slides
Human machine interfaces
Inverters
Manifolds
Miniature fluidics
Pneumatic actuators & grippers
Pneumatic valves & controls
Rotary actuators
Stepper motors, servo motors, drives & controls
Structural extrusions
Vacuum generators, cups & sensors

Climate & Industrial Controls

Key Markets
Agriculture
Air conditioning
Construction Machinery
Food & beverage
Industrial machinery
Life sciences
Oil & gas
Power Generation
Process
Refrigeration
Transportation

Key Products
Accumulators
Advanced actuators
CO_2 controls
Electronic controllers
Filter driers
Hand shut-off valves
Heat exchangers
Hose & fittings
Pressure regulating valves
Refrigerant distributors
Safety relief valves
Smart pumps
Solenoid valves
Thermal management systems
Thermostatic expansion valves

Filtration

Key Markets
Aerospace
Food & beverage
Industrial plant & equipment
Life sciences
Marine
Mobile equipment
Oil & gas
Power generation
Process
Transportation
Water Purification

Key Products
Analytical gas generators
Compressed air filters & dryers
Engine air, coolant, fuel & oil filtration systems
Fluid condition monitoring systems
Hydraulic & lubrication filters
Hydrogen, nitrogen & zero air generators
Instrumentation filters
Membrane & fiber filters
Microfiltration
Sterile air filtration
Water desalination & purification filters & systems

Fluid Connectors

Key Markets
Aerial lift
Agriculture
Bulk chemical handling
Construction machinery
Food & beverage
Fuel & gas delivery
Industrial machinery
Life sciences
Marine
Mining
Mobile
Oil & gas
Renewable energy
Transportation

Key Products
Check valves
Connectors for low pressure fluid conveyance
Deep sea umbilicals
Diagnostic equipment
Hose couplings
Industrial hose
Mooring systems & power cables
PTFE hose & tubing
Quick couplings
Rubber & thermoplastic hose
Tube fittings & adapters
Tubing & plastic fittings

Hydraulics

Key Markets
Aerial lift
Agriculture
Alternative energy
Construction machinery
Forestry
Industrial machinery
Machine tools
Marine
Material handling
Mining
Oil & gas
Power generation
Refuse vehicles
Renewable energy
Truck hydraulics
Turf equipment

Key Products
Accumulators
Cartridge valves
Electrohydraulic actuators
Human machine interfaces
Hybrid drives
Hydraulic cylinders
Hydraulic motors & pumps
Hydraulic systems
Hydraulic valves & controls
Hydrostatic steering
Integrated hydraulic circuits
Power take-offs
Power units
Rotary actuators
Sensors

Instrumentation

Key Markets
Alternative fuels
Biopharmaceuticals
Chemical & refining
Food & beverage
Marine & shipbuilding
Medical & dental
Microelectronics
Nuclear Power
Offshore oil exploration
Oil & gas
Pharmaceuticals
Power generation
Pulp & paper
Steel
Water/wastewater

Key Products
Analytical Instruments
Analytical sample conditioning products & systems
Chemical injection fittings & valves
Fluoropolymer chemical delivery fittings, valves & pumps
High purity gas delivery fittings, valves, regulators & digital flow controllers
Industrial mass flow meters/ controllers
Permanent no-weld tube fittings
Precision industrial regulators & flow controllers
Process control double block & bleeds
Process control fittings, valves, regulators & manifold valves

Seal

Key Markets
Aerospace
Chemical processing
Consumer
Fluid power
General industrial
Information technology
Life sciences
Microelectronics
Military
Oil & gas
Power generation
Renewable energy
Telecommunications
Transportation

Key Products
Dynamic seals
Elastomeric o-rings
Electro-medical instrument design & assembly
EMI shielding
Extruded & precision-cut, fabricated elastomeric seals
High temperature metal seals
Homogeneous & inserted elastomeric shapes
Medical device fabrication & assembly
Metal & plastic retained composite seals
Shielded optical windows
Silicone tubing & extrusions
Thermal management
Vibration dampening

Parker

ENGINEERING YOUR SUCCESS.

Parker Hannifin Corporation
Global Accumulator Division
10711 N Second Street
Rockford, IL 61115
phone 815 636 4100
fax 815 636 4111
www.parker.com/accumulator

Parker Hannifin Corporation
Global Accumulator Division
Barbatos Way, Hellaby
Industrial Estate, Roterham
South Yorkshire, S66 8RX UK
phone 44 1709 792500
fax 44 1709 701593
www.parker.com/accumulator

© 2012 Parker Hannifin Corporation

HY10-1630/US 3/2012

Authorized Distributor

800-525-9085
www.mfcpinc.com

MFCP Motion & Flow Control Products, Inc.