# Pneumatic Grippers

**Parallel and Angular Grippers**

*Catalog 1900-2/US*

# Contents


| | | | |
|---|---|---|---|
| **GPR Series** | | Rotary vane driven design | Miniature – GPR |
| **GPCR Series** | | Cross roller bearing design | Miniature – GPCR |
| **P5G-HPM(C) Series** | | Roller bearing design, clean room option | Miniature – P5G-HPM |
| **P5G-HP Series** | | Two-jaw wedge design | Automation – P5G-HP |
| **GPT Series** | | Cam driven | Automation – GPT |
| **P5G-AP Series** | | Automation | Automation – P5G-AP |
| **GPEL Series** | | Double piston, non-synchronous | Low Profile – GPEL |
| **GPDL Series** | | Double piston, synchronous | Low Profile – GPDL |
| **P5G-HPL(C) Series** | | Roller bearing design, clean room option | Low Profile – P5G-HPL |
| **P5G-RH Series** | | High precision automation | Precision – P5G-RH |
| **P5G-HP-P Series** | | Two-jaw, roller bearings | Precision – P5G-HP-P |
| **GPK Series** | | Miniature wide body | Long Stroke – GPK |
| **P5G-HPW Series** | | Wide body design | Long Stroke – P5G-HPW |
| **P5G-HPB Series** | | High force | Heavy Duty – P5G-HPB |
| **P5G-HPC Series** | | Three-jaw wedge design | 3-Jaw – P5G-HPC |




**Parker Hannifin Corporation**
Actuator Division
Wadsworth, Ohio USA

**Parker Hannifin Corporation**
Actuator Division
Wadsworth, Ohio USA

## Features

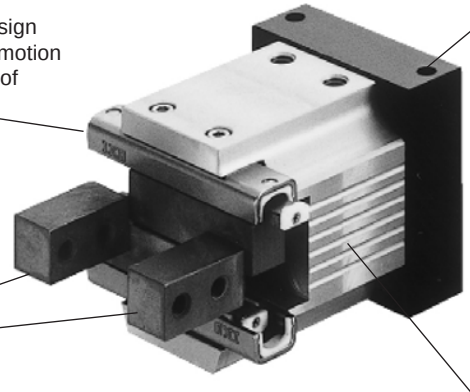

**Roller Bearing**
Roller bearing design provides precise motion with repeatability of ±0.001mm.

**Mounting Flexibility**
Standard mounting on three faces from four unique directions.

**Jaws**
Constructed from carbon steel to provide a high strength mounting surface.

**Actuator**
Driven by a vane style rotary actuator to provide high grip forces in a compact package.

## Operation

Operating Characteristic ..... Vane Driven
Gripping Force @ 72.5 PSI (5 bar) .. 33-142 N (11-46 lbs)
Stroke Range ..... 10-20 mm
Operating Pressure Range ..... 44-87 PSI (3-6 bar)

### Not Recommended for Applications Containing:

- Dirt or grit
- Maching chips
- Environments with loose particulate
- Mechanism lubricant that could cause contamination

## Mounting

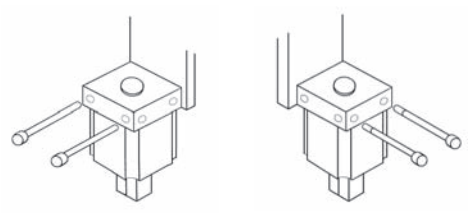

Gripper can be mounted on three faces and located with center pilot diameter for accuracy.

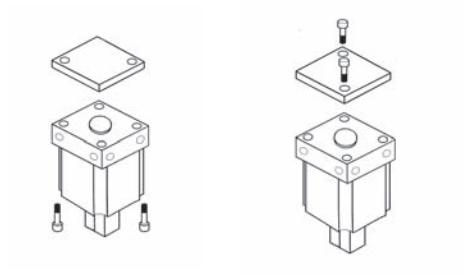

**WARNING!** Protect drive and bearing mechanism from falling debris when mounted with fingers up.

## Contents

GPR1A ..... 4
GPR3A ..... 5
GPR10A ..... 6
Optional Proximity Sensors ..... 7
Ordering Information ..... 7
Seal Kits ..... 7



**Parker Hannifin Corporation**
Actuator Division
Wadsworth, Ohio USA

## GPR1A

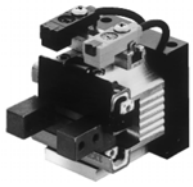

| | | |
|---|---|---|
| Total Grip Force (72.5 PSI @ 1 in) | 7.6 lbs | 33.8 N |
| Stroke | 0.39 in | 10 mm |
| Weight | 0.20 lbs | 0.09 kg |
| Bore Size | 0.71 in. | 18 mm |
| Cylinder Volume | 0.061 $in^3$ | 1.0 $cm^3$ |
| Repeatability | ± 0.0004 in | ± 0.01 mm |
| Temperature Range | 23° to 140° F | -5° to 60° C |
| Pressure Range | 44-87 psi | 3-6 bar |
| Filtration Requirement | 40 micron (dry air) | |

***Note: See model code and ordering information page for complete part number selection.***

## Loading Information

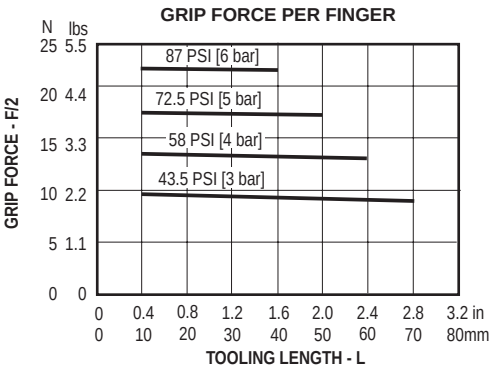


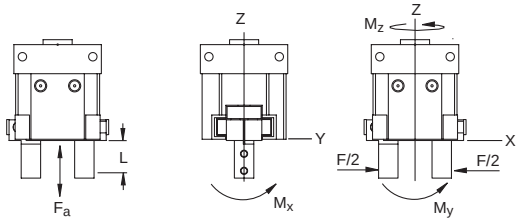


### Maximum Loading Capacity

| Load | Static | | Dynamic | |
|---|---|---|---|---|
| Axial Forces (Fa) | 35 lbs | 343 N | 50 lbs | 222 N |
| Moment (Mx) | 17 in-lbs | 1.9 Nm | 24 in-lbs | 2.7 Nm |
| Moment (My) | 17 in-lbs | 1.9 Nm | 24 in-lbs | 2.7 Nm |
| Moment (Mz) | 6.5 in-lbs | .73 Nm | 9.5 in-lbs | 1.0 Nm |

## Dimensional Information

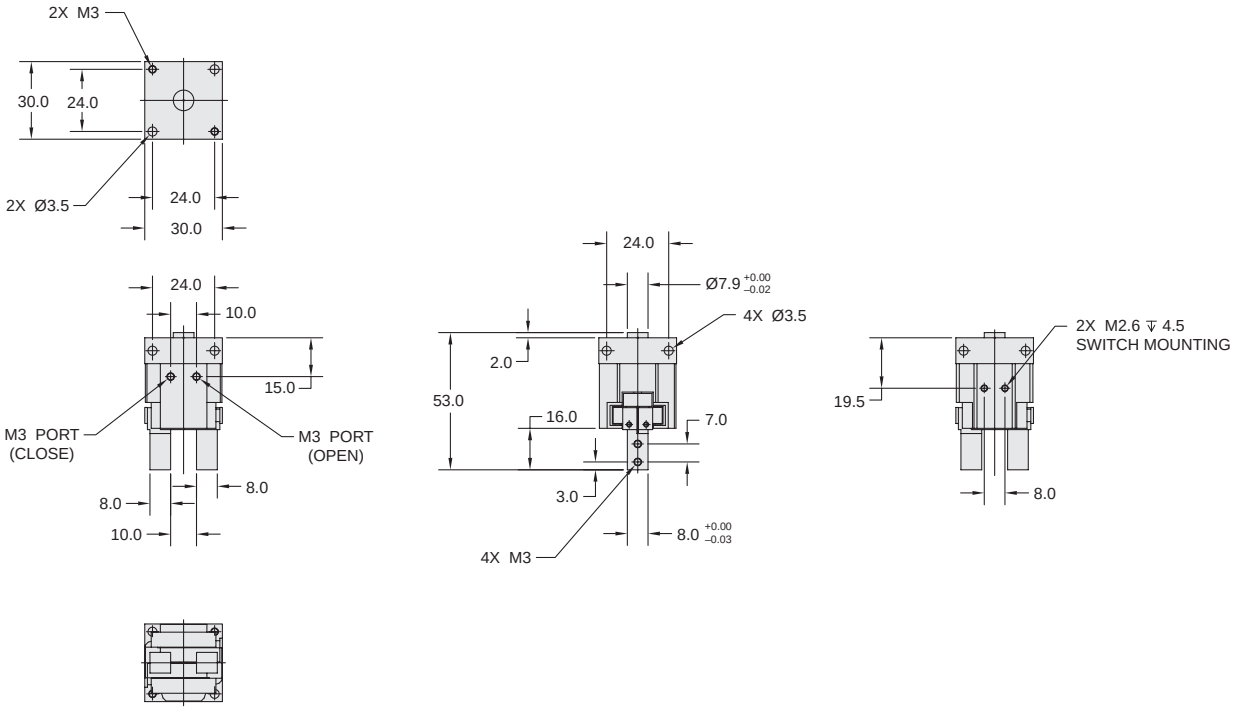


**Dimensions in mm.**



**Parker Hannifin Corporation**
Actuator Division
Wadsworth, Ohio USA

## GPR3A

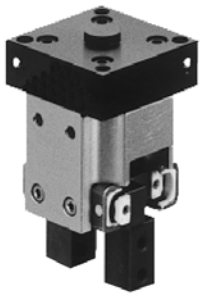

| | | |
|---|---|---|
| Total Grip Force (72.5 PSI @ 1 in) | 14.0 lbs | 62 N |
| Stroke | 0.55 in | 14 mm |
| Weight | 0.31 lbs | 0.14 kg |
| Bore Size | 0.95 in | 24 mm |
| Cylinder Volume | 0.16 $in^3$ | 2.6 $cm^3$ |
| Repeatability | ± 0.0004 in | ± 0.01 mm |
| Temperature Range | 23° to 140° F | -5° to 60° C |
| Pressure Range | 44-87 psi | 3-6 bar |
| Filtration Requirement | 40 micron (dry air) | |

***Note: See model code and ordering information page for complete part number selection.***

## Loading Information

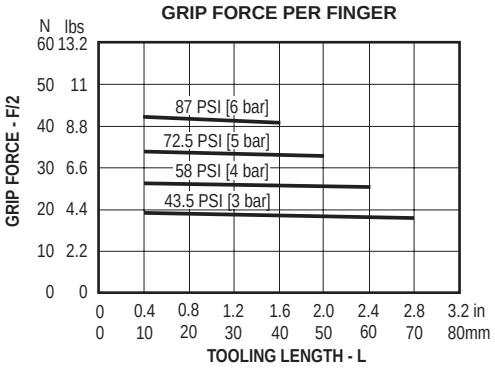


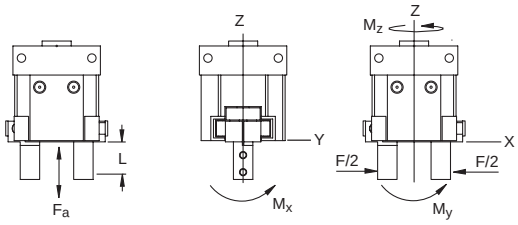


### Maximum Loading Capacity

| Load | Static | | Dynamic | |
|---|---|---|---|---|
| Axial Forces (Fa) | 42 lbs | 187 N | 65 lbs | 288 N |
| Moment (Mx) | 28.7 in-lbs | 3.2 Nm | 44.5 in-lbs | 5 Nm |
| Moment (My) | 28.7 in-lbs | 3.2 Nm | 44.5 in-lbs | 5 Nm |
| Moment (Mz) | 8.0 in-lbs | 0.9 Nm | 12.6 in-lbs | 1.4 Nm |

## Dimensional Information

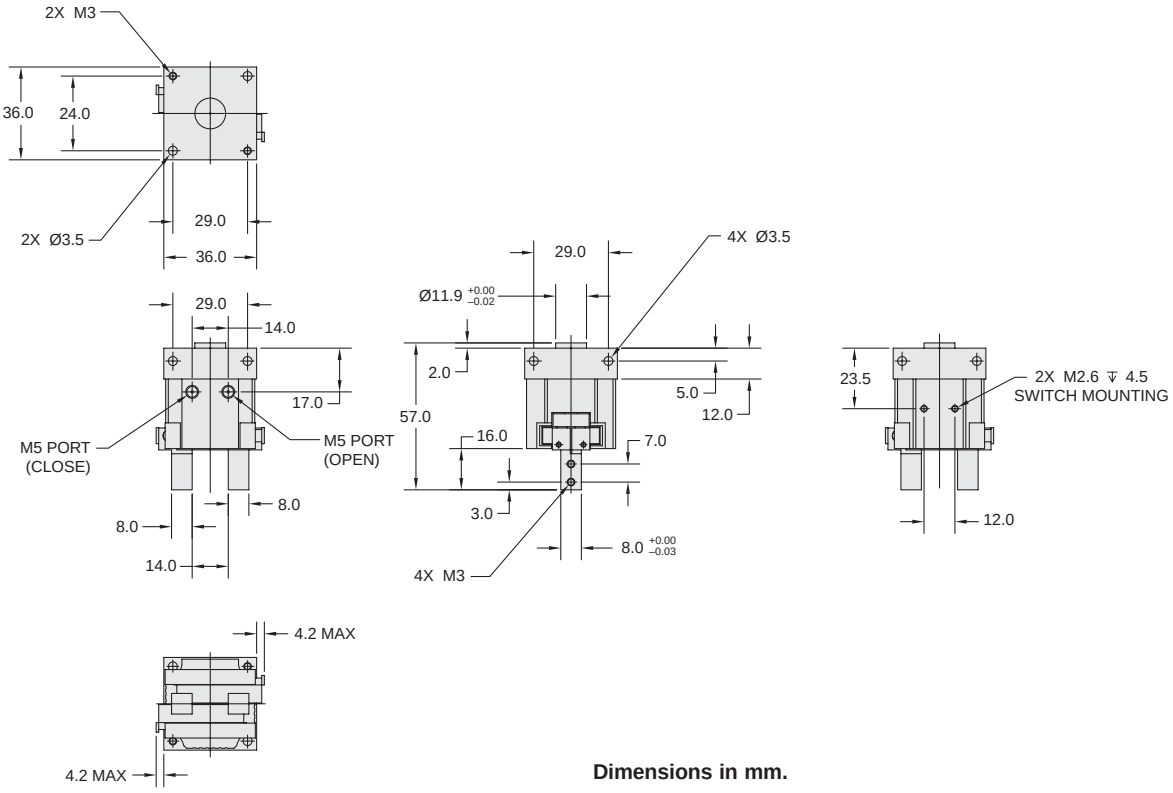


**Dimensions in mm.**



**Parker Hannifin Corporation**
Actuator Division
Wadsworth, Ohio USA

## GPR10A

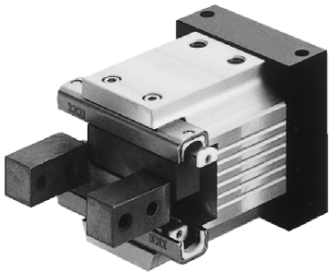

| | | |
|---|---|---|
| Total Grip Force (72.5 PSI @ 1 in) | 32 lbs | 142 N |
| Stroke | 0.79 in | 20 mm |
| Weight | 0.54 lbs | 0.245 kg |
| Bore Size | 1.18 in | 30 mm |
| Cylinder Volume | 0.61 $in^3$ | 10 $cm^3$ |
| Repeatability | +/- 0.0004 in | +/- 0.01 mm |
| Temperature Range | 23° to 140° F | -5° to 60° C |
| Pressure Range | 29-87 psi | 2-6 bar |
| Filtration Requirement | 40 micron (dry air) | |

***Note: See model code and ordering information page for complete part number selection.***

## Loading Information

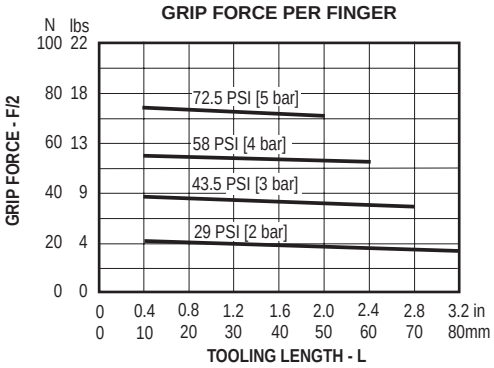


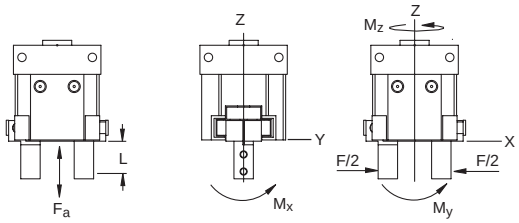


### Maximum Loading Capacity

| Load | Static | | Dynamic | |
|---|---|---|---|---|
| Axial Forces (Fa) | 50 lbs | 222 N | 80 lbs | 355 N |
| Moment (Mx) | 44 in-lbs | 5 Nm | 69 in-lbs | 7.7 Nm |
| Moment (My) | 44 in-lbs | 5 Nm | 69 in-lbs | 7.7 Nm |
| Moment (Mz) | 9.75 in-lbs | 1 Nm | 15.5 in-lbs | 1.7 Nm |

## Dimensional Information

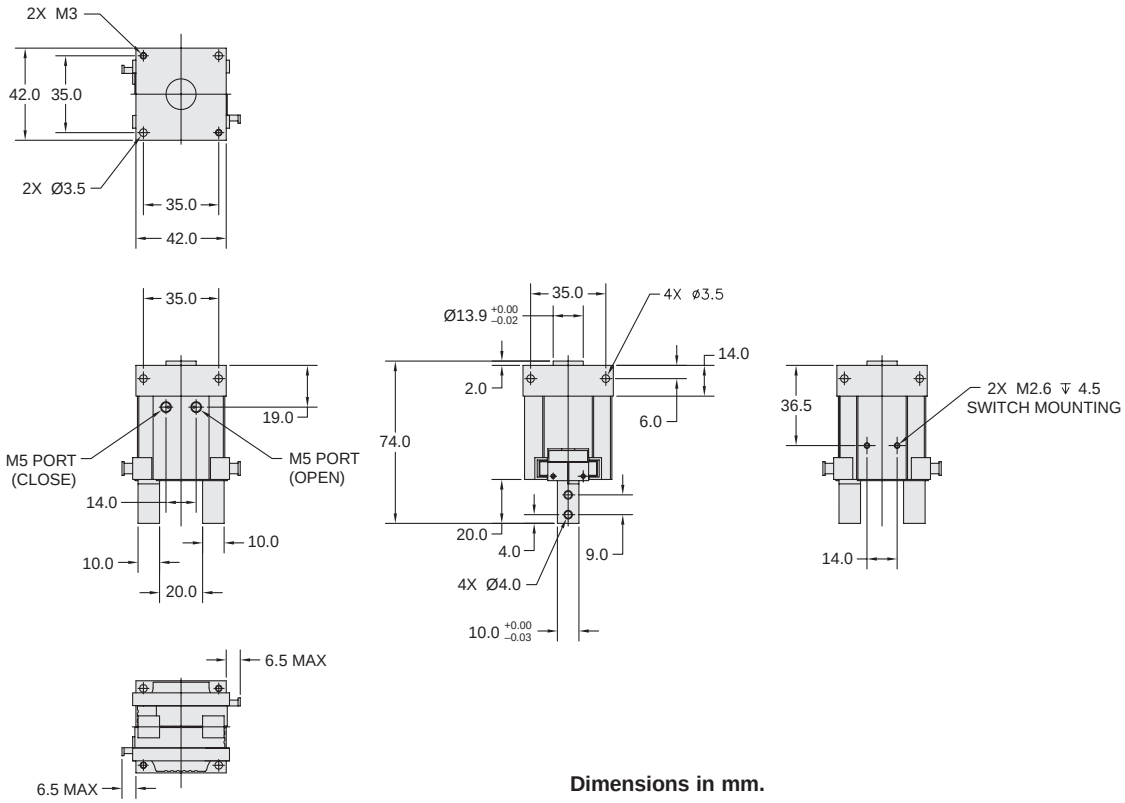


**Dimensions in mm.**



**Parker Hannifin Corporation**
Actuator Division
Wadsworth, Ohio USA

## Optional Proximity Sensors

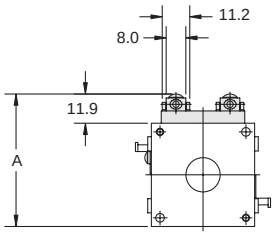


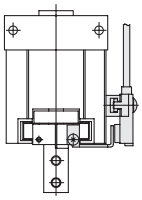

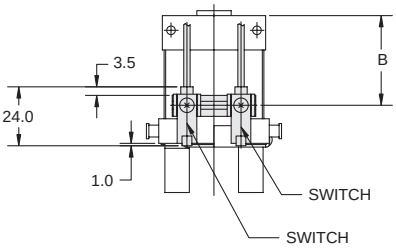


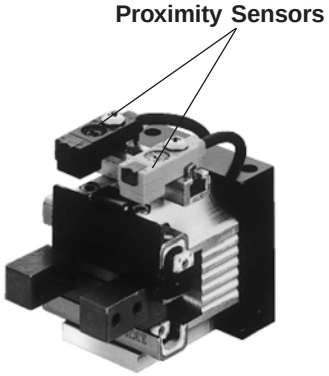


### Dimensions

| Model | A (mm) | B (mm) |
|---|---|---|
| GPR1A | 42.8 | 19.5 |
| GPR3A | 48.3 | 23.5 |
| GPR10A | 54.3 | 36.5 |

## Model Code and Ordering Information

| GPR | 1 | A |
|---|---|---|

**Series**

GPR – Rotary Driven Gripper

**Size**

1 – 18mm Bore
3 – 24mm Bore
10 – 30mm Bore

**Function**

A – Standard

## Seal Kits

| Size | Nitrile Seal Kit |
|---|---|
| GPR1 | PSK-GPR1 |
| GPR3 | PSK-GPR3 |
| GPR10 | PSK-GPR10 |



**Parker Hannifin Corporation**
Actuator Division
Wadsworth, Ohio USA

## Notes



**Parker Hannifin Corporation**
Actuator Division
Wadsworth, Ohio USA

## Features

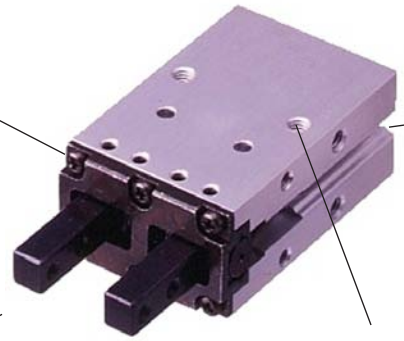

**Cross Roller Bearing**
Bearing design provides smooth, precise motion with a high degree of repeatability.

**Sensor Grooves**
Sensor grooves allow for easy installation and adjustment of Hall effect sensor. Magnetic piston standard.

**Mounting Flexibility**
Tapped mounting holes provide mounting on 3 surfaces including through hole mounting on gripper face.

**Jaws**
Carbon tool steel fingers provide high strength mounting surface.

## Operation

Operating Characteristic ..... Double Acting
Gripping Force @100 PSI (7 bar) .. 28 - 228 N (6 - 51 lbs)
Stroke Range ..... 4-14 mm
Operating Pressure Range ..... 26 - 100 PSI (1.8 - 7 bar)

### Not Recommended for Applications Containing:

- Dirt or grit
- Maching chips
- Environments with loose particulate
- Mechanism lubricant that could cause contamination

## Mounting

Gripper can be mounted on three faces and located with center pilot diameter for accuracy.

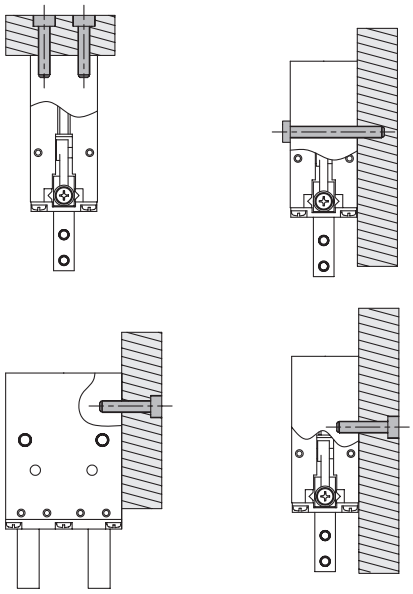

**WARNING!** Protect drive and bearing mechanism from falling debris when mounted with fingers up.

## Contents

GPCR-10C ..... 10
GPCR-16C ..... 11
GPCR-20C ..... 12
GPCR-25C ..... 13
Spring Option ..... 14
Dust Cover Option ..... 14
Ordering Information ..... 14
Seal Kits ..... 14



**Parker Hannifin Corporation**
Actuator Division
Wadsworth, Ohio USA

# GPCR-10C

| | | |
|---|---|---|
| Total Grip Force (100 PSI @ 1 in) | 6.4 lbs | 28.5 N |
| Stroke | 0.16 in | 4 mm |
| Weight | 0.11 lbs | 0.048 kg |
| Bore Size | 0.394 in | 10 mm |
| Cylinder Volume | 0.004 $in^3$ | 0.63 $cm^3$ |
| Repeatability | ± 0.0004 in | ± 0.01 mm |
| Temperature Range | 32° to 140° F | 0° to 60° C |
| Pressure Range | 26-101 psi | 1.8-7 bar |
| Filtration Requirement | 40 micron (dry air) | |

***Note: See model code and ordering information page for complete part number selection.***

## Loading Information

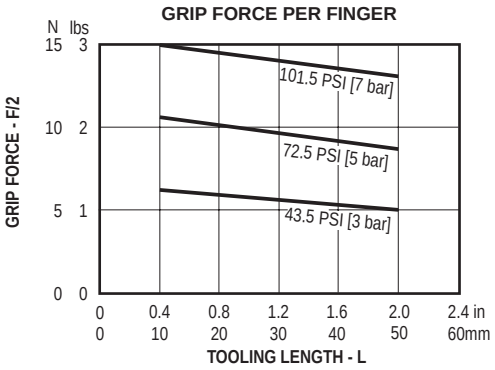


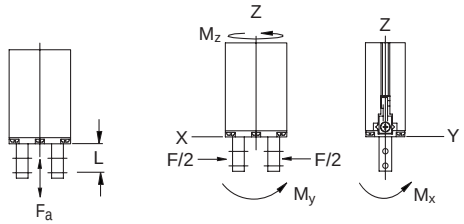


### Maximum Loading Capacity

| Load | Static | |
|---|---|---|
| Axial Forces (Fa) | 13 lb | 58 N |
| Moment (Mx) | 2.3 in-lb | 0.26 Nm |
| Moment (My) | 2.3 in-lb | 0.26 Nm |
| Moment (Mz) | 4.7 in-lb | 0.53 Nm |

## Dimensional Information

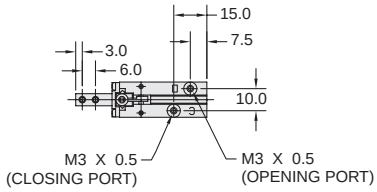


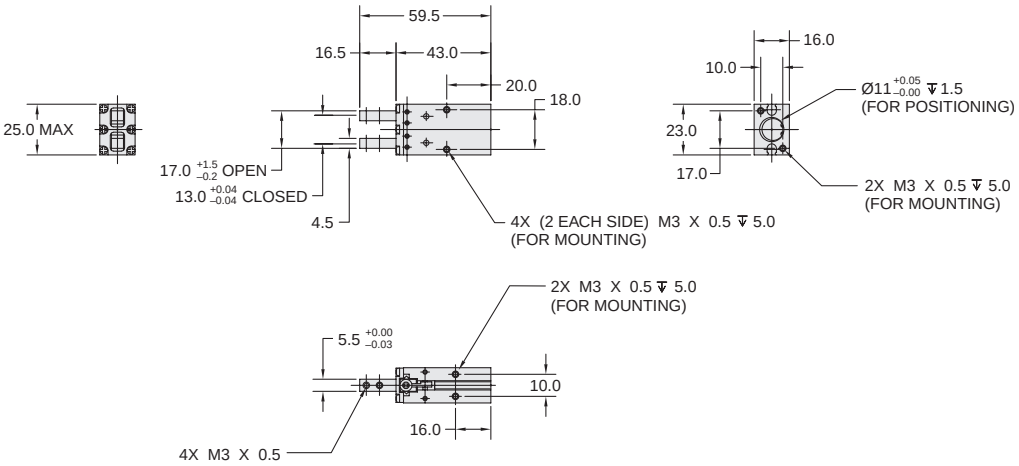


**Dimensions in mm.**



**Parker Hannifin Corporation**
Actuator Division
Wadsworth, Ohio USA

# GPCR-16C

| | | |
|---|---|---|
| Total Grip Force (100 PSI @ 1 in) | 16.6 lbs | 74 N |
| Stroke | 0.31 in | 8 mm |
| Weight | 0.27 lbs | 0.12 kg |
| Bore Size | 0.63 in | 16 mm |
| Cylinder Volume | 0.196 $in^3$ | 3.21 $cm^3$ |
| Repeatability | ± .0004 in | ± .01 mm |
| Temperature Range | 32° to 140° F | 0° to 60° C |
| Pressure Range | 17-101 psi | 1.2-7 bar |
| Filtration Requirement | 40 micron (dry air) | |

***Note: See model code and ordering information page for complete part number selection.***

## Loading Information

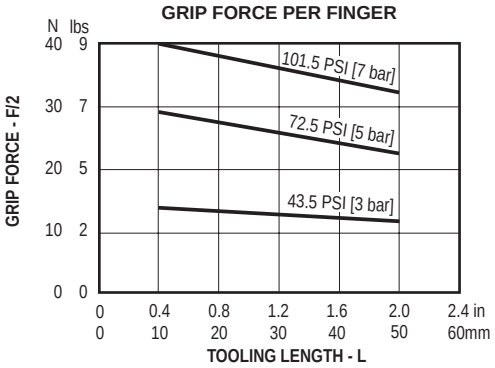


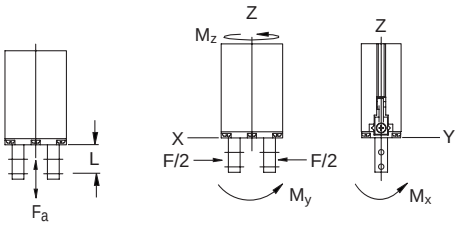


### Maximum Loading Capacity

| Load | Static | |
|---|---|---|
| Axial Forces (Fa) | 21.4 lbs | 95 N |
| Moment (Mx) | 6 in-lbs | 0.68 Nm |
| Moment (My) | 6 in-lbs | 0.68 Nm |
| Moment (Mz) | 12 in-lbs | 1.36 Nm |

## Dimensional Information

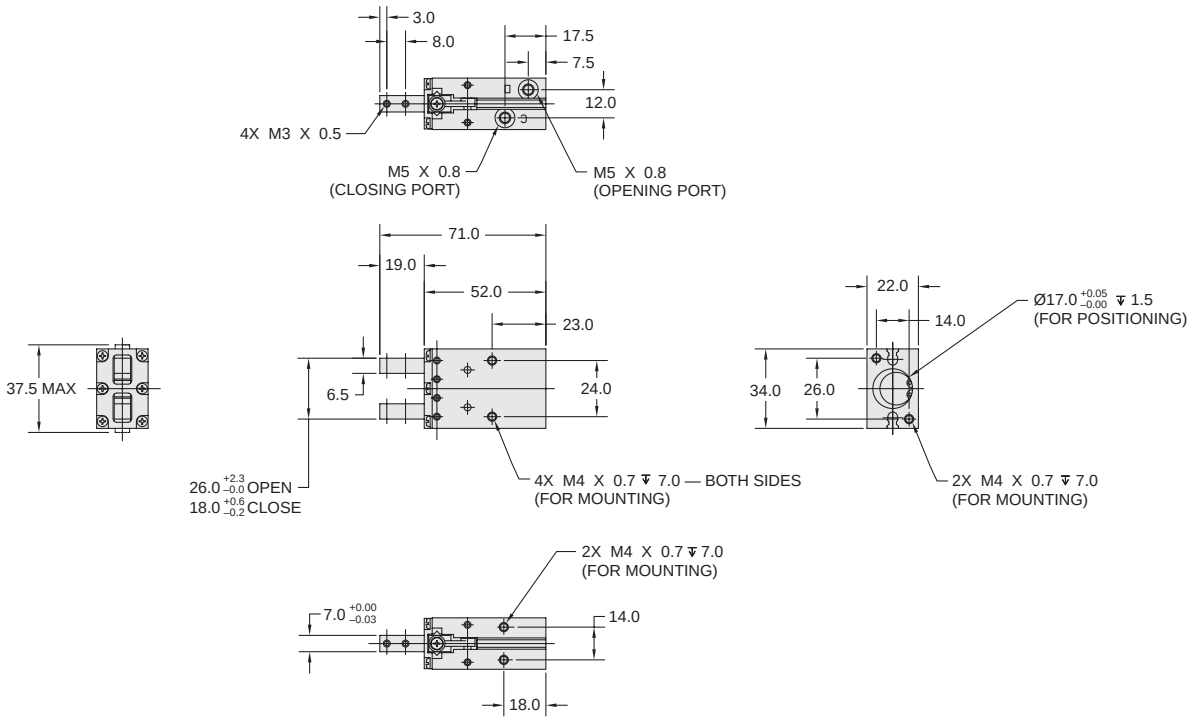


**Dimensions in mm.**



**Parker Hannifin Corporation**
Actuator Division
Wadsworth, Ohio USA

# GPCR-20C

| | | |
|---|---|---|
| Total Grip Force (100 PSI @ 1 in) | 31.4 lbs | 140 N |
| Stroke | 0.47 in | 12 mm |
| Weight | 0.48 lbs | 0.218 kg |
| Bore Size | 0.63 in | 20 mm |
| Cylinder Volume | 0.46 $in^3$ | 7.54 $cm^3$ |
| Repeatability | ± .0004 in | ± .01 mm |
| Temperature Range | 32° to 140° F | 0° to 60° C |
| Pressure Range | 15-101 psi | 1-7 bar |
| Filtration Requirement | 40 micron (dry air) | |

***Note: See model code and ordering information page for complete part number selection.***

## Loading Information

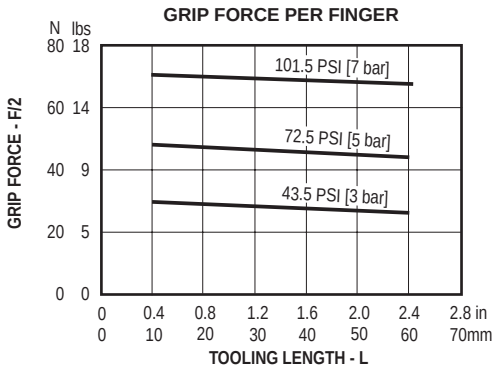


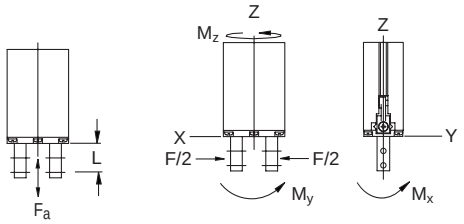


### Maximum Loading Capacity

| Load | Static | |
|---|---|---|
| Axial Forces (Fa) | 33 lbs | 147 N |
| Moment (Mx) | 11.5 in-lbs | 1.3 Nm |
| Moment (My) | 11.5 in-lbs | 1.3 Nm |
| Moment (Mz) | 23.9 in-lbs | 2.7 Nm |

## Dimensional Information

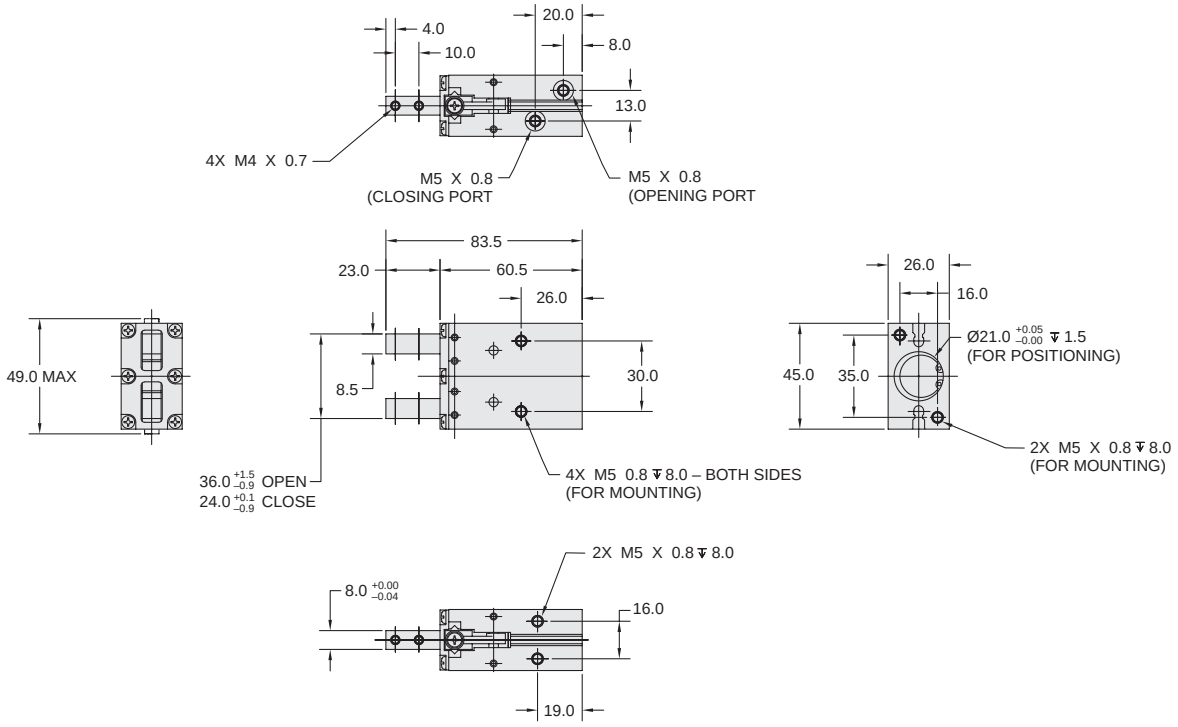


**Dimensions in mm.**



**Parker Hannifin Corporation**
Actuator Division
Wadsworth, Ohio USA

# GPCR-25C

| | | |
|---|---|---|
| Total Grip Force (100 PSI @ 1 in) | 50.8 lbs | 226 N |
| Stroke | .55 in | 14 mm |
| Weight | .81 lbs | .366 kg |
| Bore Size | .98 in | 25 mm |
| Cylinder Volume | 0.84 $in^3$ | 13.74 $cm^3$ |
| Repeatability | +/- .0004 in | +/- .01 mm |
| Temperature Range | 32º to 140º F | 0º to 60º C |
| Pressure Range | 15-101 psi | 1-7 bar |
| Filtration Requirement | 40 micron (dry air) | |

***Note: See model code and ordering information page for complete part number selection.***

## Loading Information

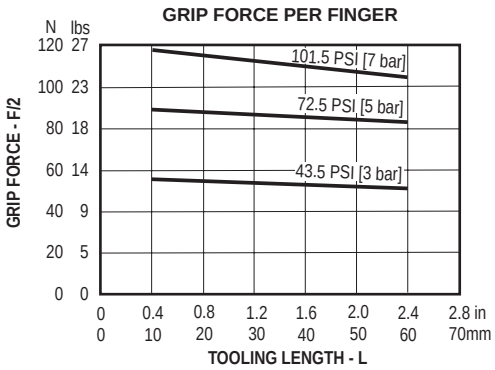


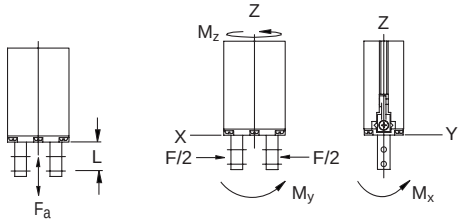


### Maximum Loading Capacity

| Load | Static | |
|---|---|---|
| Axial Forces (Fa) | 50.6 lbs | 225 N |
| Moment (Mx) | 16.8 in-lbs | 1.9 Nm |
| Moment (My) | 16.8 in-lbs | 1.9 Nm |
| Moment (Mz) | 34.5 in-lbs | 3.9 Nm |

## Dimensional Information

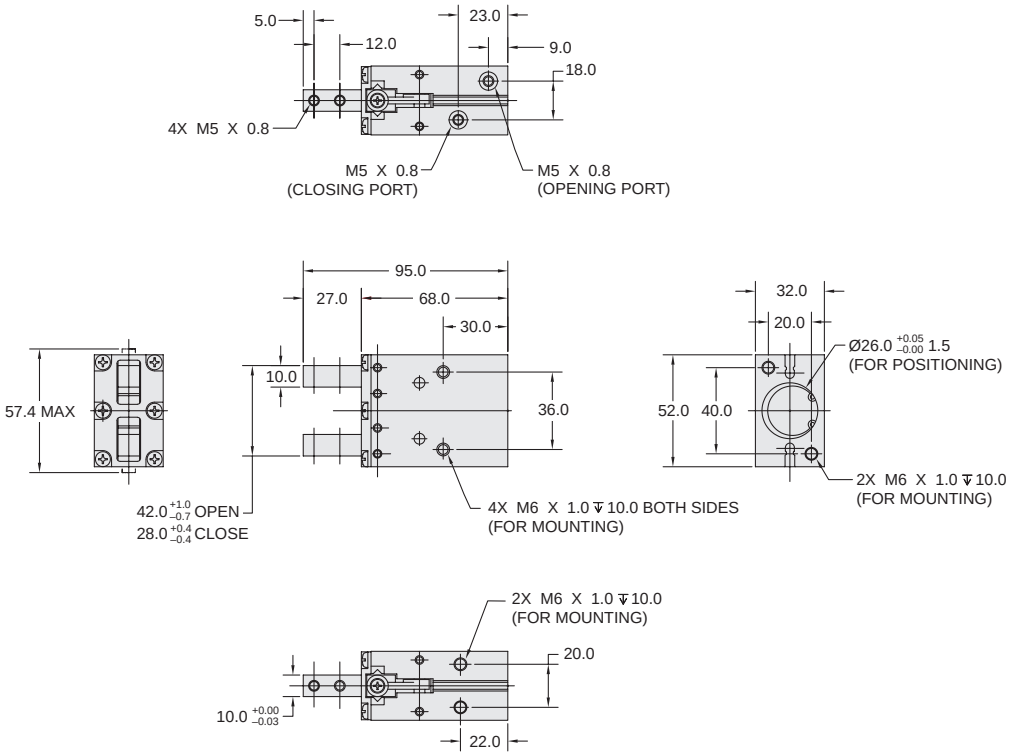


**Dimensions in mm.**



**Parker Hannifin Corporation**
Actuator Division
Wadsworth, Ohio USA

## Spring Open (A)

The spring open option allows for an automatic reset and jaw return under zero pressure. Selecting the spring assist option creates a single-acting gripper which may reduce the number of directional control valves needed. The spring open option also allows the fingers to return to the open position when pressure is lost during a power failure.

**Note:** The spring open option does not change gripper dimensions.

| Size | Standard Open ($lb_f$) | Standard Closed ($lb_f$) | Spring Open ($lb_f$) | Spring Closed ($lb_f$) |
|---|---|---|---|---|
| GPRC-10A | 4.1 | 6.4 | 2.2 | 0.9 |
| GPRC-16A | 11.2 | 15.0 | 9.2 | 1.7 |
| GPRC-20A | 20.1 | 26.8 | 15.6 | 3.0 |
| GPRC-25A | 29.5 | 38.3 | 23.8 | 6.0 |

**Note:** Based on 5 bar (72.5 psi) and l = 30mm

## Dust Cover (JN, JF, JS)

A dust cover can be added to prevent contaminants from entering the working mechanism of the gripper. This allows for the GPRC cross roller bearing design to be used in dusty or dirty environments.

The cover is available in nitrile, fluorocarbon or silicon rubber to suit any application need.

### Dimensions (mm)

| Size | A | B | C | D | E |
|---|---|---|---|---|---|
| 10 | 27 | 20 | 22 | 26.6 | 18 |
| 16 | 39 | 26 | 27.5 | 37.6 | 24 |
| 20 | 51 | 30 | 34 | 48.6 | 28 |
| 25 | 59 | 36 | 38.3 | 55.6 | 34 |

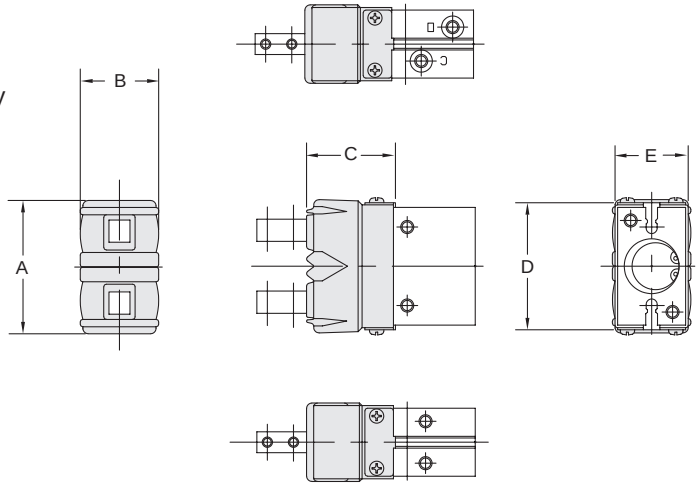


## Model Code and Ordering Information

**GPCR – 12 C – JN**

### Series

GPCR – Miniature Gripper

### Size

10 – 10mm Bore
16 – 16mm Bore
20 – 20mm Bore
25 – 25mm Bore

### Function

C – Standard, Double Acting
A – Single Acting, Spring Assist (Normally Open)

### Dust Cover

Omit – No Cover (Standard)
JN – Nitrile Rubber Cover
JF – Fluorocarbon Rubber Cover
JS – Silicone Rubber Cover

## Seal Kits

| Size | Nitrile Seal Kit |
|---|---|
| GPCR-10 | PSK-GPCR-10 |
| GPCR-16 | PSK-GPCR-16 |
| GPCR-20 | PSK-GPCR-20 |
| GPCR-25 | PSK-GPCR-25 |



**Parker Hannifin Corporation**
Actuator Division
Wadsworth, Ohio USA

## Features

**Dowel Pin Holes**
Slip fit dowels located in gripper body and jaws.

**Body**
One piece anodized aluminum body

**Bearing Adjustment**
Preload adjustment screw allows for adjustment of the bearing preload, maintaining maximum gripper performance.

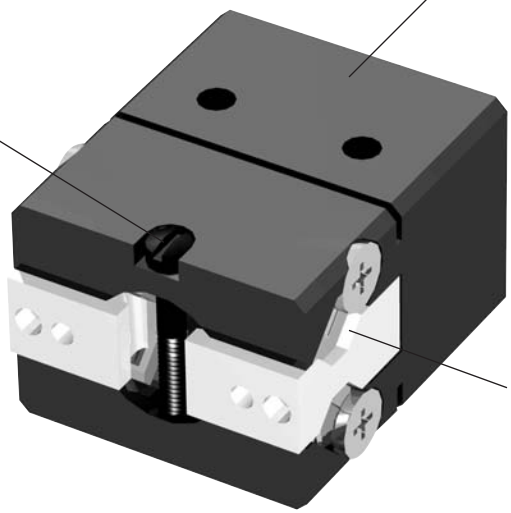

**Seals**
Self-lubricating dynamic seals (Nitrile only)

**Internal Components**
Internal components are made from hardened steels for maximum life

**Preloaded Bearings**
Preloaded roller bearings provide maximum support and precise motion.

## Operation

Operating Characteristic ..... Double acting, pin wedge design
Gripping Force @100 PSI ..... 22 - 43 lbs
Stroke Range ..... 1/8" to 1/4"
Operating Pressure Range ..... 40 - 100 PSI (2.8 - 7 bar)

**Not recommended for applications containing:**

- Dirt or grit
- Machining chips
- Environments with loose particulate
- Mechanism lubricant that could cause contamination

## Mounting

Body mounts with screws and locates with slip fit dowel pins for accuracy.

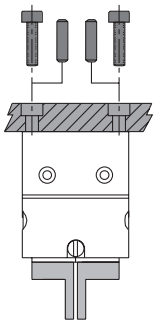

**WARNING!** Protect drive and bearing mechanism from falling debris when mounted with fingers up.

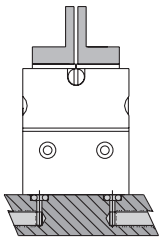

Fingers attach to jaws with screws and locate by dowel pins.

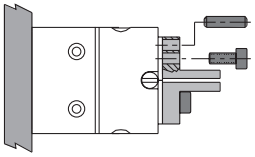

## Contents

P5G-HPM-1 ..... 16
P5G-HPM-2 ..... 17
P5G-HPM-3 ..... 18
Clean Room Option ..... 19
Fluorocarbon Seals Option ..... 19
Manifold Mount Seal Kit ..... 19
Ordering Information ..... 20
Seal Kits ..... 20



**Parker Hannifin Corporation**
Actuator Division
Wadsworth, Ohio USA

## P5G-HPM-1M-V

| | | |
|---|---|---|
| Total Grip Force (100 psi @ 1 in) | 8 lbs | 36 N |
| Stroke | 0.13 in | 3.2 mm |
| Weight | 0.052 lbs | 0.024 kg |
| Bore Size | 0.394 in | 10.0 mm |
| Cylinder Volume | 0.008 $in^3$ | 0.13 $cm^3$ |
| Repeatability | ± 0.001 in | ± 0.03 mm |
| Temperature Range* | -30° to 180° F | -35° to 80° C |
| Pressure Range | 40-100 psi | 3-7 bar |
| Filtration Requirement | 40 micron (dry air) | |

* Fluorocarbon seals available for high temperature applications

***Note: See model code and ordering information page for complete part number selection.***

## Loading Information

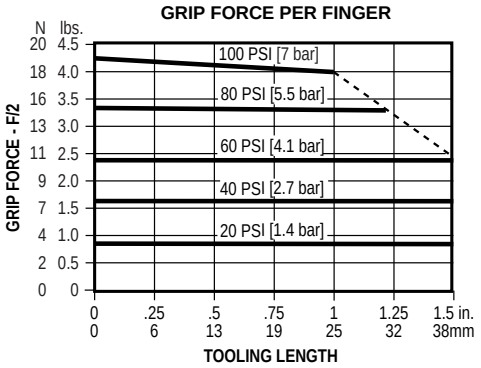


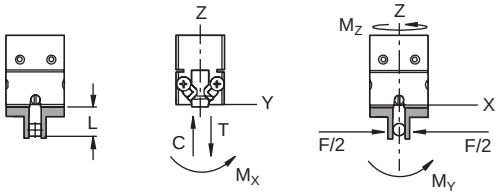


### Maximum Loading Capacity

| Load | Static | | Dynamic | |
|---|---|---|---|---|
| Axial Forces (C,T) | 20 lbs | 89 N | 7 lbs | 31 N |
| Moment (Mx) | 12 in-lbs | 1 Nm | 4 in-lbs | 0.5 Nm |
| Moment (My) | 15 in-lbs | 2 Nm | 5 in-lbs | 0.6 Nm |
| Moment (Mz) | 12 in-lbs | 1 Nm | 4 in-lbs | 0.5 Nm |

## Dimensional Information

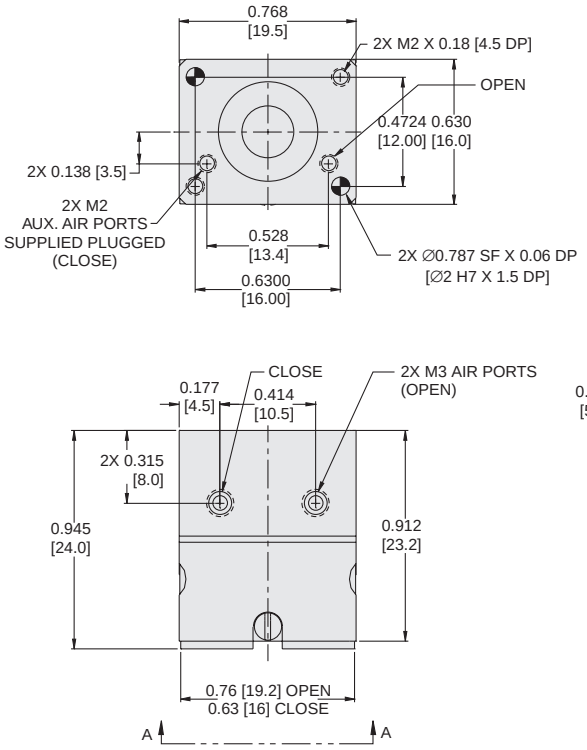


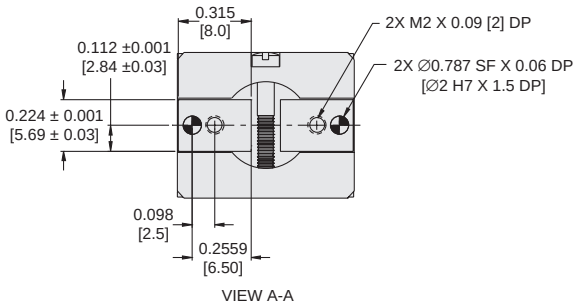


**Dimensions in inch [mm].**



**Parker Hannifin Corporation**
Actuator Division
Wadsworth, Ohio USA

## P5G-HPM-2M-V

| | | |
|---|---|---|
| Total Grip Force (100 psi @ 1 in) | 8 lbs | 36 N |
| Stroke | 0.19 in | 4.8 mm |
| Weight | 0.058 lbs | 0.026 kg |
| Bore Size | 0.394 in | 10.0 mm |
| Cylinder Volume | 0.012 $in^3$ | 0.20 $cm^3$ |
| Repeatability | ± 0.001 in | ± 0.03 mm |
| Temperature Range* | -30° to 180° F | -35° to 80° C |
| Pressure Range | 40-100 psi | 3-7 bar |
| Filtration Requirement | 40 micron (dry air) | |

* Fluorocarbon seals available for high temperature applications

***Note: See model code and ordering information page for complete part number selection.***

## Loading Information

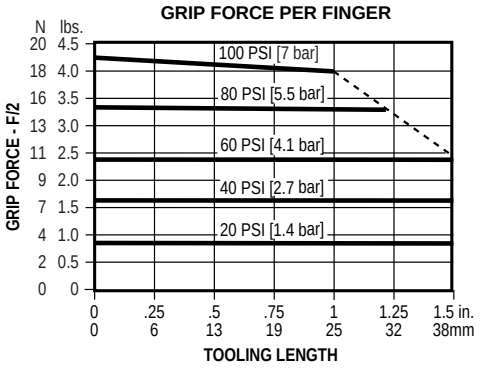


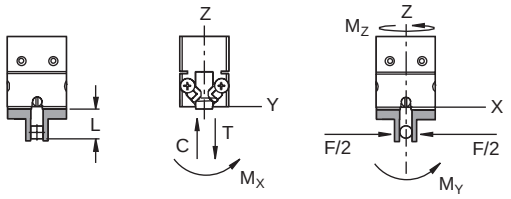


### Maximum Loading Capacity

| Load | Static | | Dynamic | |
|---|---|---|---|---|
| Axial Forces (C,T) | 20 lbs | 89 N | 7 lbs | 31 N |
| Moment (Mx) | 12 in-lbs | 1 Nm | 4 in-lbs | 0.5 Nm |
| Moment (My) | 15 in-lbs | 2 Nm | 5 in-lbs | 0.6 Nm |
| Moment (Mz) | 12 in-lbs | 1 Nm | 4 in-lbs | 0.5 Nm |

## Dimensional Information

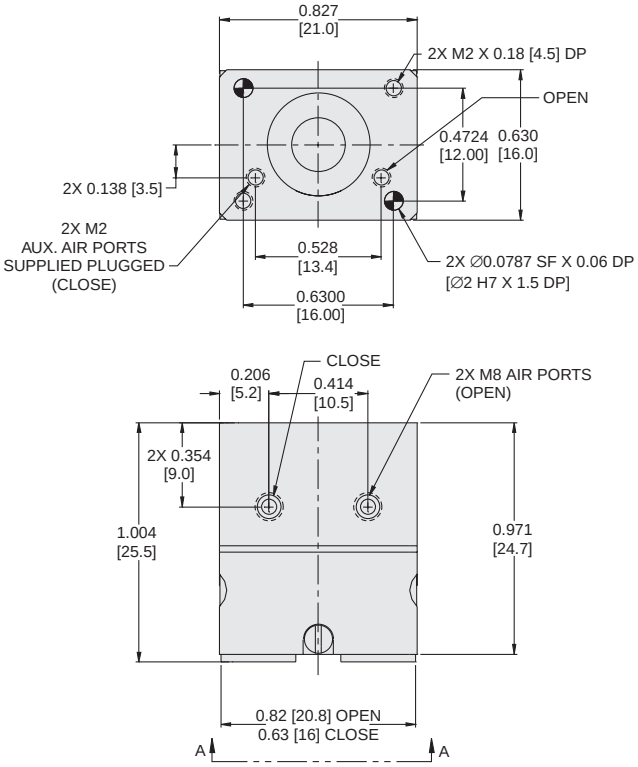


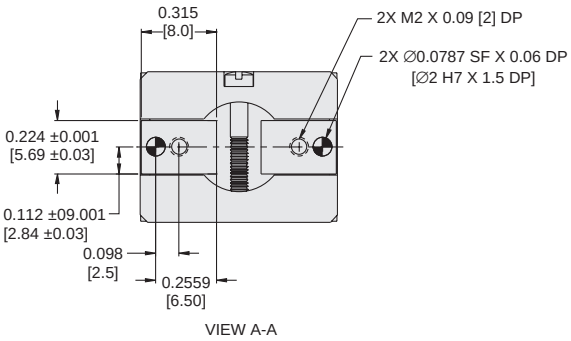


**Dimensions in inch [mm].**



**Parker Hannifin Corporation**
Actuator Division
Wadsworth, Ohio USA

## P5G-HPM-3M-V

| | | |
|---|---|---|
| Total Grip Force (100 psi @ 1 in) | 8 lbs | 36 N |
| Stroke | 0.25 in | 6.3 mm |
| Weight | 0.074 lbs | 0.034 kg |
| Bore Size | 0.394 in | 10.0 mm |
| Cylinder Volume | 0.015 $in^3$ | 0.25 $cm^3$ |
| Repeatability | ± 0.001 in | ± 0.03 mm |
| Temperature Range* | -30° to 180° F | -35° to 80° C |
| Pressure Range | 40-100 psi | 3-7 bar |
| Filtration Requirement | 40 micron (dry air) | |

* Fluorocarbon seals available for high temperature applications

***Note: See model code and ordering information page for complete part number selection.***

## Loading Information

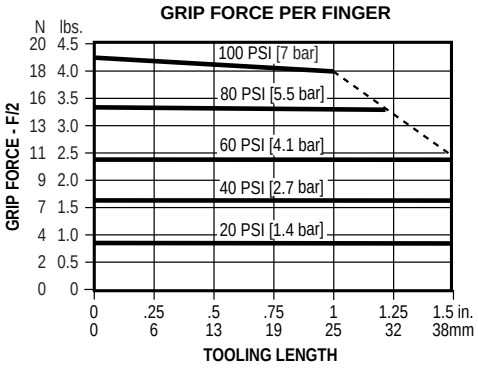


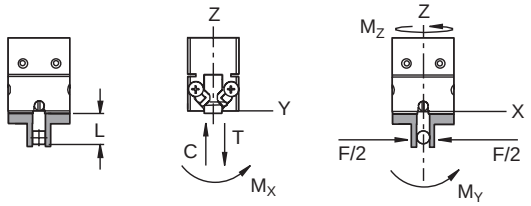


### Maximum Loading Capacity

| Load | Static | | Dynamic | |
|---|---|---|---|---|
| Axial Forces (C,T) | 20 lbs | 89 N | 7 lbs | 31 N |
| Moment (Mx) | 12 in-lbs | 1 Nm | 4 in-lbs | 0.5 Nm |
| Moment (My) | 15 in-lbs | 2 Nm | 5 in-lbs | 0.6 Nm |
| Moment (Mz) | 12 in-lbs | 1 Nm | 4 in-lbs | 0.5 Nm |

## Dimensional Information

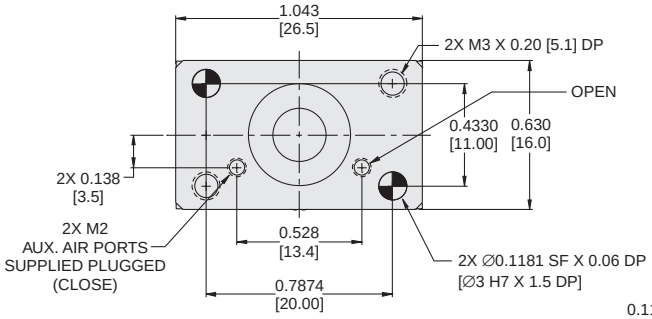


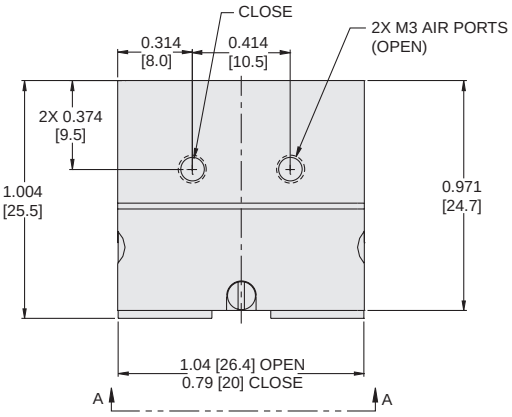


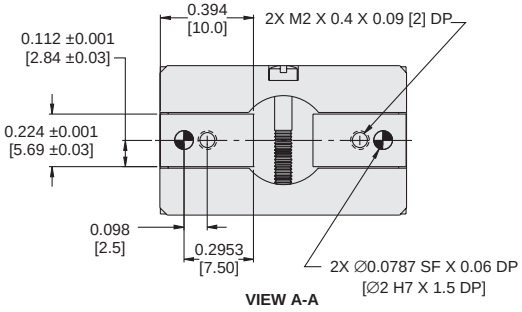


**Dimensions in inch [mm].**



**Parker Hannifin Corporation**
Actuator Division
Wadsworth, Ohio USA

## Clean Room Option (C)

Stainless steel plates are added to the gripper housing to protect the internal linkage from contaminants. These plates also prevent the generation of contaminants in clean-room applications.

A purge port is also added for extreme applications where air born contaminants may be introduced to the gripper. Applying vacuum pressure prevents the escape of contaminants generated by internal components.

Clean-room grade lubricants are used.

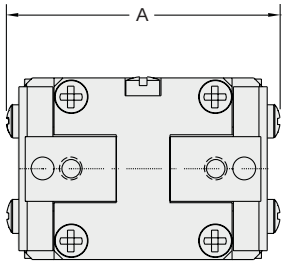


| Size | A in (mm) |
|---|---|
| HPM-1 | 0.89 (23.0) |
| HPM-2 | 0.94 (24.0) |
| HPM-3 | 1.16 (30.0) |

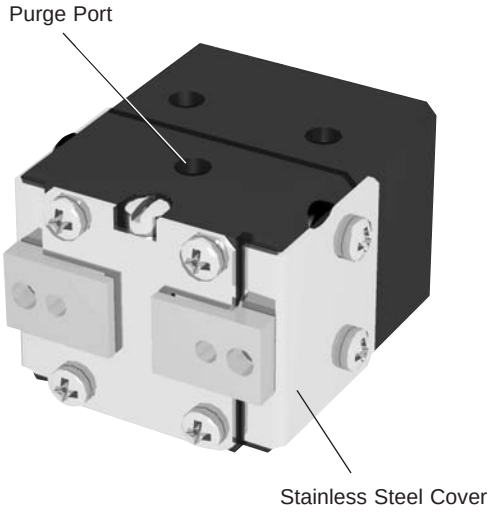


**Clean Room Lubricants**
Units are lubricated with a clean-room grade grease.

## Fluorocarbon Seals (V)

Standard nitrile seals should be used for general purpose applications with temperatures of –30° to 180° F (-35° to 80° C). Fluorocarbon seals are recommended for high temperature applications up to 250° F (120° C).

| Seal Type | Temperature Range |
|---|---|
| Standard Buna-N | -30° to 180°F (-35° to 80°C) |
| Fluorocarbon | -20° to 250°F (-30° to 120°C) |

## Manifold Mount Seal Kit

The P5G-HPM Series can be ported using the manifold mount option when mounted on the top-mounting surface. Using the manifold mount eliminates the need for external air lines or fittings and allows for mounting several grippers in close proximity.

The unit comes as standard with the manifold mounting ports plugged. The seal kit should be ordered separately and is available in fluorocarbon only.

| Size | Manifold Mount Seal Kit |
|---|---|
| P5G-HPM1 | PSK-P5G-HPM1-M |
| P5G-HPM2 | PSK-P5G-HPM2-M |
| P5G-HPM3 | PSK-P5G-HPM3-M |

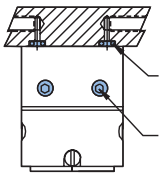




**Parker Hannifin Corporation**
Actuator Division
Wadsworth, Ohio USA

## Model Code and Ordering Information

**P5G – HPM C – 1 M – V**

**Type**
P5G – Pneumatic Gripper

**Series**
HPM – Miniature

**Options**
Omit – Standard
C – Clean Room Option

**Size**
1 – 10mm Bore, 3.2mm Stroke
2 – 10mm Bore, 4.8mm Stroke
3 – 10mm Bore, 6.3mm Stroke

**Design**
M – Metric (Standard)

**Seals**
Omit – Nitrile Seals (Standard)
V – Fluorocarbon Seals

## Seal Kits

| Size | Nitrile Seal Kit | Fluorocarbon Seal Kit | Manifold Mount Seal Kit |
|---|---|---|---|
| P5G-HPM1 | PSK-P5G-HPM1 | PSK-P5G-HPM1-V | PSK-P5G-HPM1-M |
| P5G-HPM2 | PSK-P5G-HPM2 | PSK-P5G-HPM2-V | PSK-P5G-HPM2-M |
| P5G-HPM3 | PSK-P5G-HPM3 | PSK-P5G-HPM3-V | PSK-P5G-HPM3-M |

## Features

**Body**
One-piece hard coat anodized aluminum body with Teflon® impregnation

**Sensors/ Mounting Kit**
Read position of jaw (sold separately)

**Seals**
Self lubricating dynamic seals (Nitrile only)

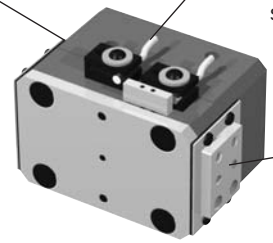

**Dowel Pin Holes**
Slip fit dowels located in gripper body and jaws.

**Wedge Design**
Efficient guided wedge design provides high force to weight ratio. Jaw components are precision ground to minimize play.

**Contaminant Tolerance**
Sealed design resists internal contamination (not available on sizes 11 and 12).



## Operation

Operating Characteristic ..... Double acting, wedge design
Gripping Force @ 100 PSI ..... 25 - 694 lbs
Stroke Range ..... 0.16 to 2.0 inches
Operating Pressure Range ..... 40-100 PSI (2.8 - 7 bar)

**Sizes 5 and 10 only are not recommended for applications containing:**

- Dirt or grit
- Machining chips
- Environments with loose particulate
- Mechanism lubricant that could cause contamination

## Mounting

Gripper can be mounted in any orientation due to sealed housing design.

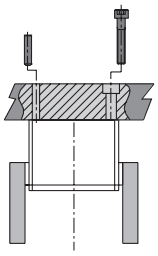

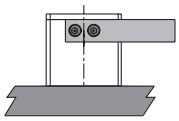

Body mounts using tapped holes and slip fit dowel pin holes.

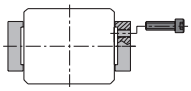

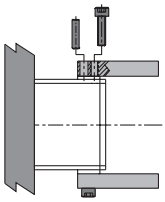

Custom finger tooling mounts using tapped holes and

## Contents

P5G-HP-5 Miniature ..... 22
P5G-HP-10 Miniature ..... 23
P5G-HP-11 ..... 24
P5G-HP-11-D ..... 25
P5G-HP-12 ..... 26
P5G-HP-12-D ..... 27
P5G-HP-15 ..... 28
P5G-HP-15-D ..... 29
P5G-HP-17 ..... 30
P5G-HP-17-D ..... 31
P5G-HP-18 ..... 32
P5G-HP-18-D ..... 33
P5G-HP-19 ..... 34
P5G-HP-19-D ..... 35
Metric Design Option ..... 36
Spring Options ..... 36
Fluorocarbon Seals ..... 36
Proximity Sensors ..... 37
Seal Kits ..... 37
Ordering Information ..... 38



**Parker Hannifin Corporation**
Actuator Division
Wadsworth, Ohio USA

## P5G-HP-5M-FS-V

| | | |
|---|---|---|
| Total Grip Force (100 psi @ 1 in) | 25 lbs | 111 N |
| Stroke | 0.16 in | 4.1 mm |
| Weight | 0.18 lbs | 0.08 kg |
| Bore Size | 0.75 in | 19.1 mm |
| Cylinder Volume | 0.042 $in^3$ | 0.7 $cm^3$ |
| Repeatability | ± 0.0005 in | ± 0.01 mm |
| Temperature Range* | -30° to 180° F | -35° to 80° C |
| Pressure Range | 40-100 psi | 3-7 bar |
| Filtration Requirement | 40 micron (dry air) | |

* Fluorocarbon seals available for high temperature applications

***Note: See model code and ordering information page for complete part number selection.***

## Loading Information

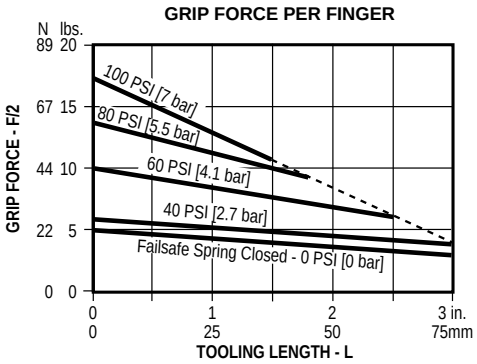


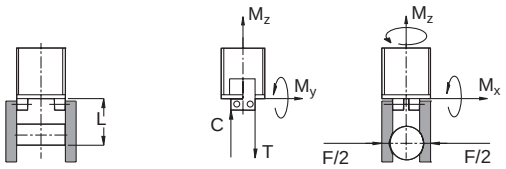


### Maximum Loading Capacity

| | Static | | Dynamic | |
|---|---|---|---|---|
| Axial Forces (C,T) | 50 lbs | 222 N | 7 lbs | 31 N |
| Moment (Mx) | 30 in-lbs | 3.4 Nm | 5 in-lbs | 0.6 Nm |
| Moment (My) | 30 in-lbs | 3.4 Nm | 5 in-lbs | 0.6 Nm |
| Moment (Mz) | 30 in-lbs | 3.4 Nm | 5 in-lbs | 0.6 Nm |

## Dimensional Information

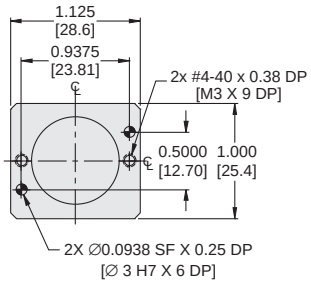


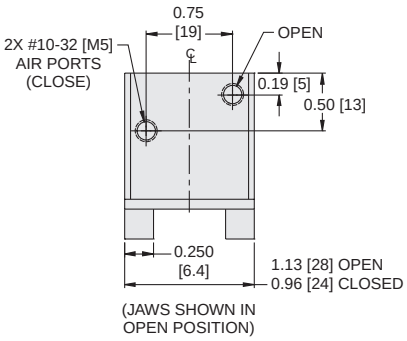


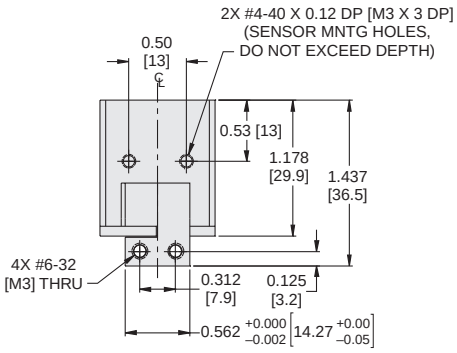


**Dimensions in inch [mm].**



**Parker Hannifin Corporation**
Actuator Division
Wadsworth, Ohio USA

## P5G-HP-10M-V

| | | |
|---|---|---|
| Total Grip Force (100 psi @ 1 in) | 35 lbs | 155 N |
| Stroke | 0.25 in | 6.4 mm |
| Weight | 0.28 lbs | 0.13 kg |
| Bore Size | 1 in | 25.4 mm |
| Cylinder Volume | 0.098 $in^3$ | 1.6 $cm^3$ |
| Repeatability | ± 0.0005 in | ± 0.01 mm |
| Temperature Range* | -30° to 180° F | -35° to 80° C |
| Pressure Range | 40-100 psi | 3-7 bar |
| Filtration Requirement | 40 micron (dry air) | |

* Fluorocarbon seals available for high temperature applications

***Note: See model code and ordering information page for complete part number selection.***

## Loading Information

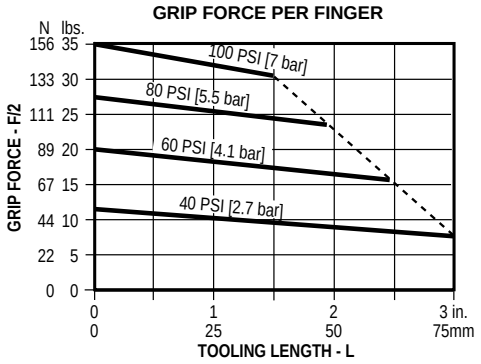


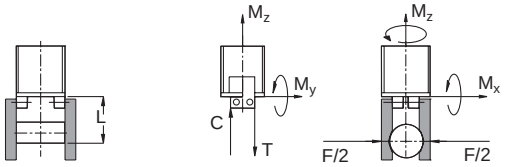


### Maximum Loading Capacity

| | Static | | Dynamic | |
|---|---|---|---|---|
| Axial Forces (C,T) | 100 lbs | 445 N | 15 lbs | 67 N |
| Moment (Mx) | 90 in-lbs | 10.2 Nm | 15 in-lbs | 1.5 Nm |
| Moment (My) | 90 in-lbs | 10.2 Nm | 15 in-lbs | 1.5 Nm |
| Moment (Mz) | 90 in-lbs | 10.2 Nm | 15 in-lbs | 1.5 Nm |

## Dimensional Information

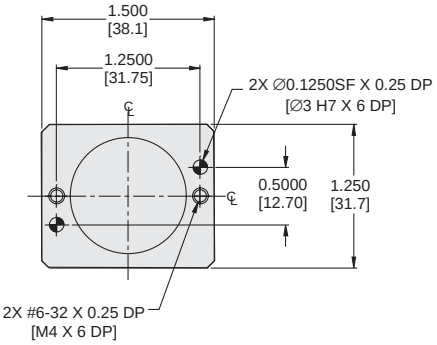


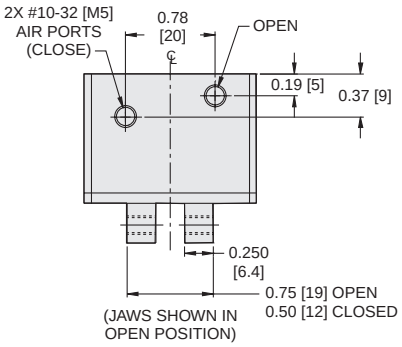


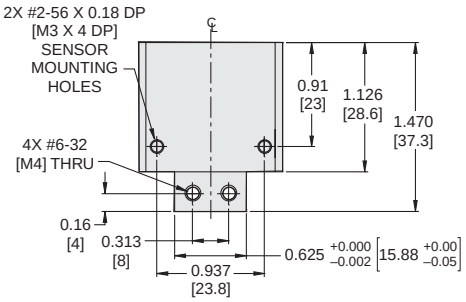


**Dimensions in inch [mm].**



**Parker Hannifin Corporation**
Actuator Division
Wadsworth, Ohio USA

## P5G-HP-11M-V

| | | |
|---|---|---|
| Total Grip Force (100 psi @ 1 in) | 35 lbs | 155 N |
| Stroke | 0.25 in | 6.4 mm |
| Weight | 0.26 lbs | 0.12 kg |
| Bore Size | 1 in | 25.4 mm |
| Cylinder Volume | 0.098 $in^3$ | 1.6 $cm^3$ |
| Repeatability | ± 0.001 in | ± 0.03 mm |
| Temperature Range* | -30º to 180º F | -35º to 80º C |
| Pressure Range | 40-100 psi | 3-7 bar |
| Filtration Requirement | 40 micron (dry air) | |

* Fluorocarbon seals available for high temperature applications

***Note: See model code and ordering information page for complete part number selection.***

## Loading Information

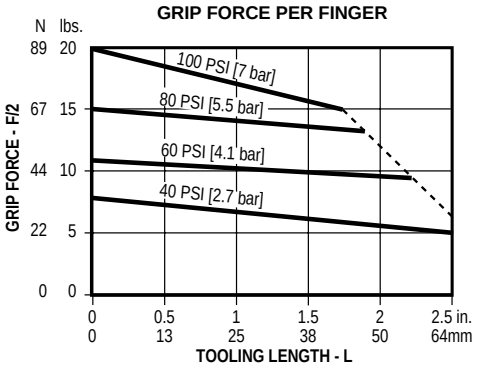


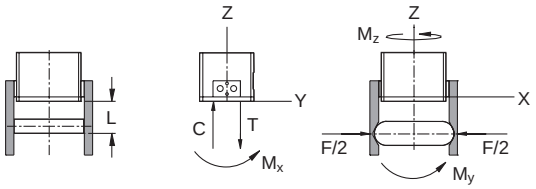


### Maximum Loading Capacity

| | Static | | Dynamic | |
|---|---|---|---|---|
| Axial Forces (C,T) | 100 lbs | 445 N | 25 lbs | 111 N |
| Moment (Mx) | 100 in-lbs | 11 Nm | 17 in-lbs | 2 Nm |
| Moment (My) | 100 in-lbs | 11 Nm | 17 in-lbs | 2 Nm |
| Moment (Mz) | 100 in-lbs | 11 Nm | 17 in-lbs | 2 Nm |

## Dimensional Information

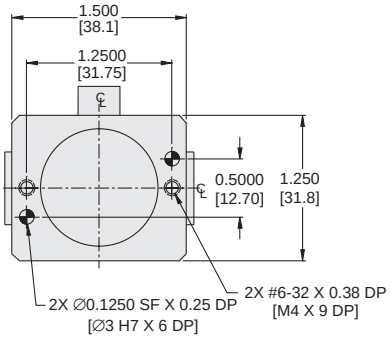


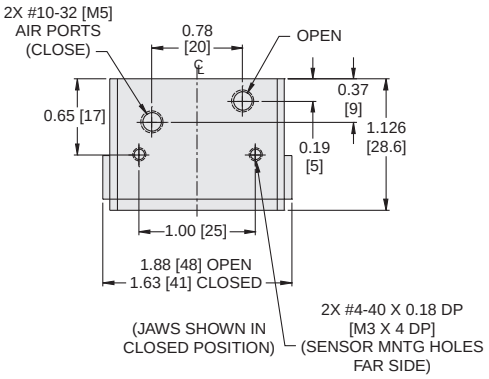


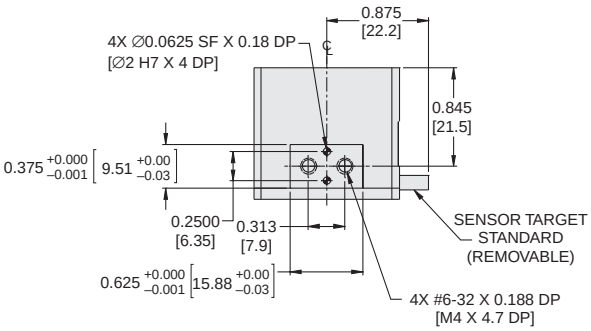


**Dimensions in inch [mm].**



**Parker Hannifin Corporation**
Actuator Division
Wadsworth, Ohio USA

## P5G-HP-11M-D-V

| | | |
|---|---|---|
| Total Grip Force (100 psi @ 1 in) | 64 lbs | 285 N |
| Stroke | 0.16 in | 4 mm |
| Weight | 0.26 lbs | 0.12 kg |
| Bore Size | 1 in | 25.4 mm |
| Cylinder Volume | 0.098 $in^3$ | 1.6 $cm^3$ |
| Repeatability | ± 0.001 in | ± 0.03 mm |
| Temperature Range* | -30° to 180° F | -35° to 80° C |
| Pressure Range | 40-100 psi | 3-7 bar |
| Filtration Requirement | 40 micron (dry air) | |

* Fluorocarbon seals available for high temperature applications

***Note: See model code and ordering information page for complete part number selection.***



## Loading Information

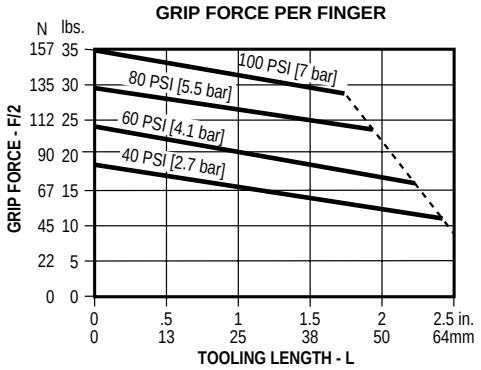


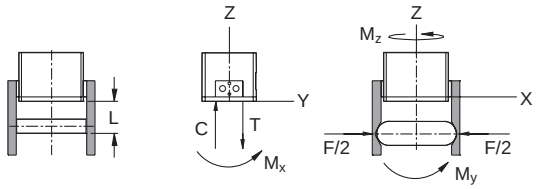


### Maximum Loading Capacity

| | Static | | Dynamic | |
|---|---|---|---|---|
| Axial Forces (C,T) | 100 lbs | 445 N | 25 lbs | 111 N |
| Moment (Mx) | 100 in-lbs | 11 Nm | 17 in-lbs | 2 Nm |
| Moment (My) | 100 in-lbs | 11 Nm | 17 in-lbs | 2 Nm |
| Moment (Mz) | 100 in-lbs | 11 Nm | 17 in-lbs | 2 Nm |

## Dimensional Information

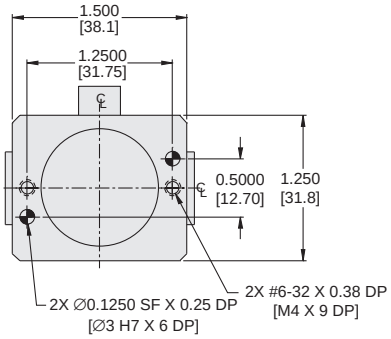


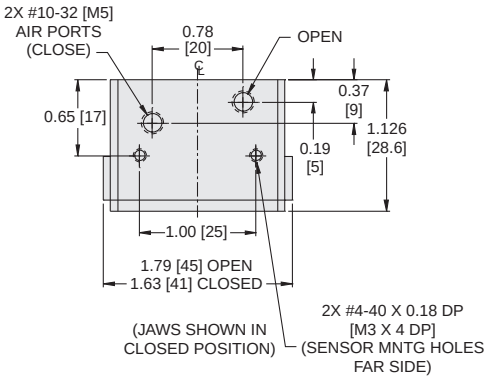


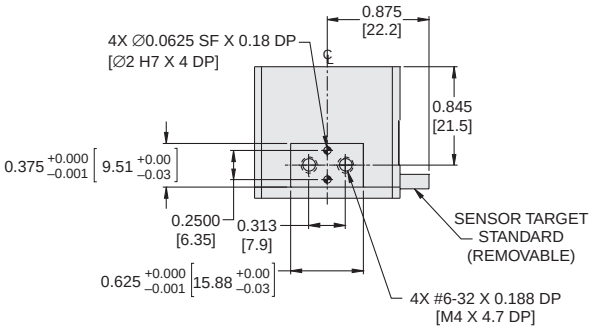


**Dimensions in inch [mm].**



**Parker Hannifin Corporation**
Actuator Division
Wadsworth, Ohio USA

## P5G-HP-12M-V

| | | |
|---|---|---|
| Total Grip Force (100 psi @ 1 in) | 37 lbs | 165 N |
| Stroke | 0.38 in | 9.5 mm |
| Weight | 0.56 lbs | 0.25 kg |
| Bore Size | 1 in | 25.4 mm |
| Cylinder Volume | 0.150 $in^3$ | 2.5 $cm^3$ |
| Repeatability | ± 0.001 in | ± 0.03 mm |
| Temperature Range* | -30° to 180° F | -35° to 80° C |
| Pressure Range | 40-100 psi | 3-7 bar |
| Filtration Requirement | 40 micron (dry air) | |

* Fluorocarbon seals available for high temperature applications

***Note: See model code and ordering information page for complete part number selection.***

## Loading Information

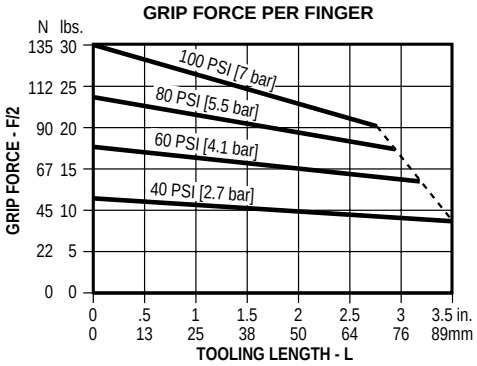


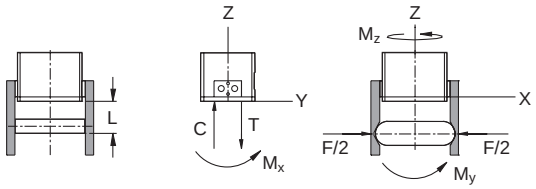


### Maximum Loading Capacity

| | Static | | Dynamic | |
|---|---|---|---|---|
| Axial Forces (C,T) | 200 lbs | 890 N | 25 lbs | 111 N |
| Moment (Mx) | 150 in-lbs | 17 Nm | 25 in-lbs | 3 Nm |
| Moment (My) | 150 in-lbs | 17 Nm | 25 in-lbs | 3 Nm |
| Moment (Mz) | 150 in-lbs | 17 Nm | 25 in-lbs | 3 Nm |

## Dimensional Information

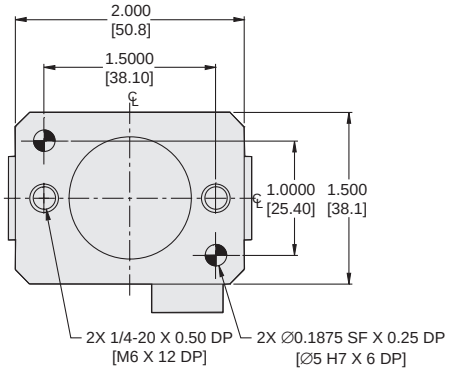


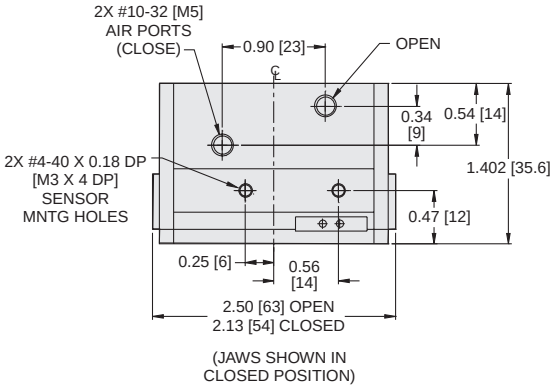


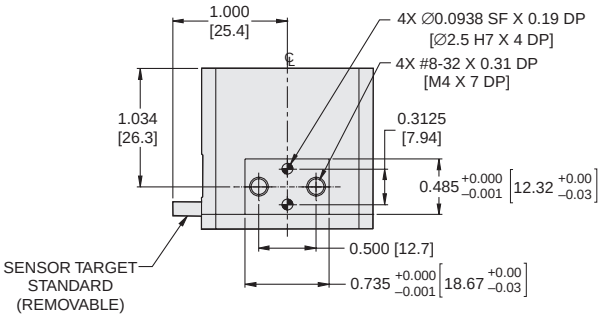


**Dimensions in inch [mm].**



**Parker Hannifin Corporation**
Actuator Division
Wadsworth, Ohio USA

## P5G-HP-12M-D-V

| | | |
|---|---|---|
| Total Grip Force (100 psi @ 1 in) | 54 lbs | 240 N |
| Stroke | 0.24 in | 6 mm |
| Weight | 0.56 lbs | 0.25 kg |
| Bore Size | 1 in | 25.4 mm |
| Cylinder Volume | 0.150 $in^3$ | 2.5 $cm^3$ |
| Repeatability | ± 0.001 in | ± 0.03 mm |
| Temperature Range* | -30° to 180° F | -35° to 80° C |
| Pressure Range | 40-100 psi | 3-7 bar |
| Filtration Requirement | 40 micron (dry air) | |

* Fluorocarbon seals available for high temperature applications

***Note: See model code and ordering information page for complete part number selection.***

## Loading Information

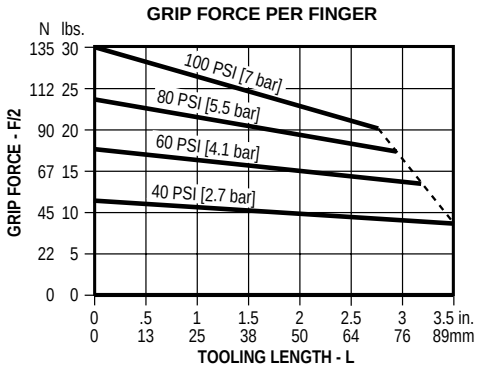


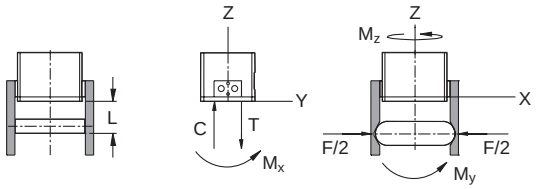


### Maximum Loading Capacity

| | Static | | Dynamic | |
|---|---|---|---|---|
| Axial Forces (C,T) | 200 lbs | 890 N | 25 lbs | 111 N |
| Moment (Mx) | 150 in-lbs | 17 Nm | 25 in-lbs | 3 Nm |
| Moment (My) | 150 in-lbs | 17 Nm | 25 in-lbs | 3 Nm |
| Moment (Mz) | 150 in-lbs | 17 Nm | 25 in-lbs | 3 Nm |

## Dimensional Information

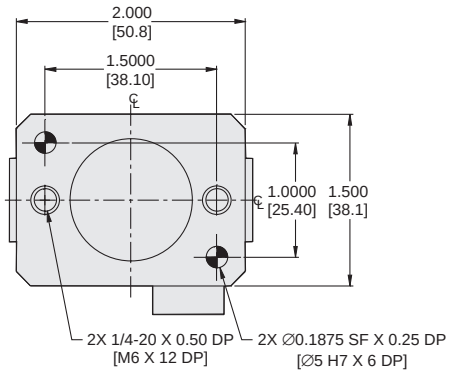


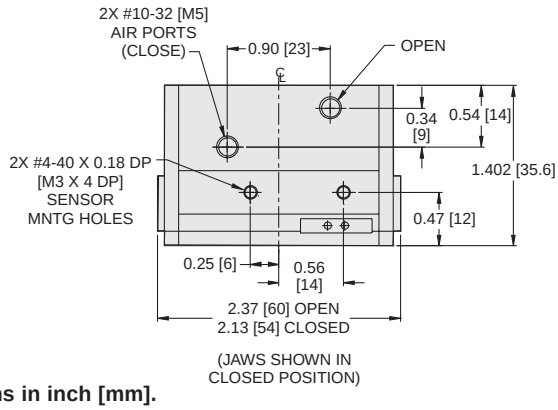


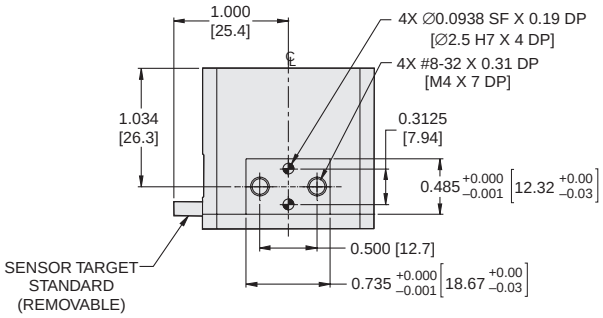


**Dimensions in inch [mm].**



**Parker Hannifin Corporation**
Actuator Division
Wadsworth, Ohio USA

## P5G-HP-15M-V

| | | |
|---|---|---|
| Total Grip Force (100 psi @ 1 in) | 67 lbs | 310 N |
| Stroke | 0.50 in | 12.7 mm |
| Weight | 1.1 lbs | 0.50 kg |
| Bore Size | 1.25 in | 31.8 mm |
| Cylinder Volume | 0.300 $in^3$ | 4.9 $cm^3$ |
| Repeatability | ± 0.001 in | ± 0.03 mm |
| Temperature Range* | -30° to 180° F | -35° to 80° C |
| Pressure Range | 40-100 psi | 3-7 bar |
| Filtration Requirement | 40 micron (dry air) | |

* Fluorocarbon seals available for high temperature applications

***Note: See model code and ordering information page for complete part number selection.***

## Loading Information

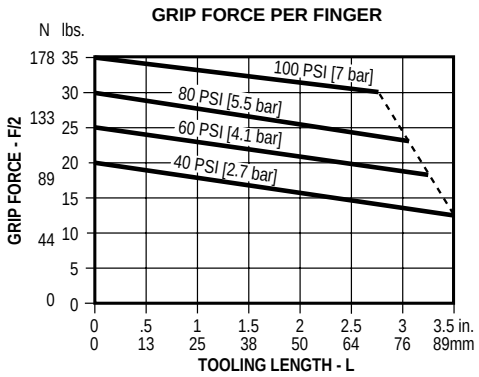


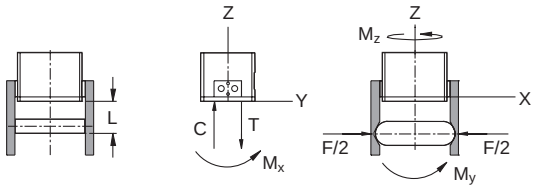


### Maximum Loading Capacity

| | Static | | Dynamic | |
|---|---|---|---|---|
| Axial Forces (C,T) | 400 lbs | 1779 N | 50 lbs | 222 N |
| Moment (Mx) | 300 in-lbs | 34 Nm | 50 in-lbs | 6 Nm |
| Moment (My) | 300 in-lbs | 34 Nm | 50 in-lbs | 6 Nm |
| Moment (Mz) | 300 in-lbs | 34 Nm | 50 in-lbs | 6 Nm |

## Dimensional Information

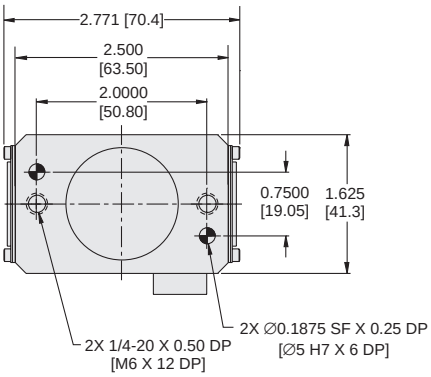


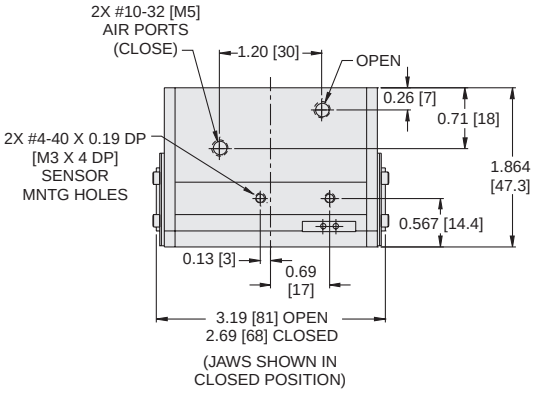


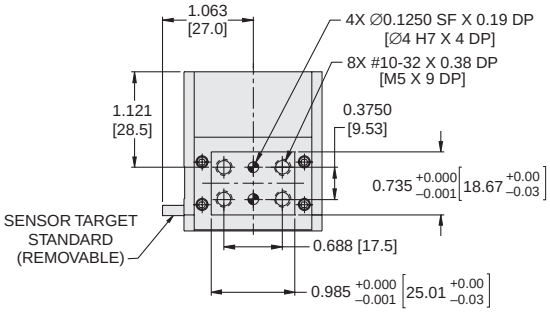


**Dimensions in inch [mm].**



**Parker Hannifin Corporation**
Actuator Division
Wadsworth, Ohio USA

## P5G-HP-15M-D-V

| | | |
|---|---|---|
| Total Grip Force (100 psi @ 1 in) | 94 lbs | 418 N |
| Stroke | 0.31 in | 8 mm |
| Weight | 1.1 lbs | 0.50 kg |
| Bore Size | 1.25 in | 31.8 mm |
| Cylinder Volume | 0.300 $in^3$ | 4.9 $cm^3$ |
| Repeatability | ± 0.001 in | ± 0.03 mm |
| Temperature Range* | -30° to 180° F | -35° to 80° C |
| Pressure Range | 40-100 psi | 3-7 bar |
| Filtration Requirement | 40 micron (dry air) | |

* Fluorocarbon seals available for high temperature applications

***Note: See model code and ordering information page for complete part number selection.***

## Loading Information

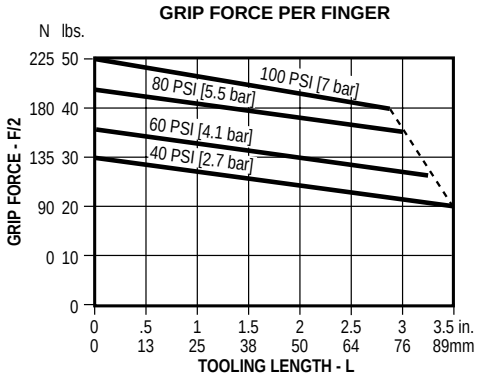


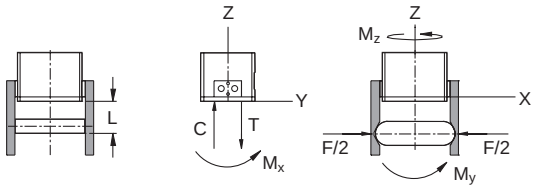


### Maximum Loading Capacity

| | Static | | Dynamic | |
|---|---|---|---|---|
| Axial Forces (C,T) | 400 lbs | 1779 N | 50 lbs | 222 N |
| Moment (Mx) | 300 in-lbs | 34 Nm | 50 in-lbs | 6 Nm |
| Moment (My) | 300 in-lbs | 34 Nm | 50 in-lbs | 6 Nm |
| Moment (Mz) | 300 in-lbs | 34 Nm | 50 in-lbs | 6 Nm |

## Dimensional Information

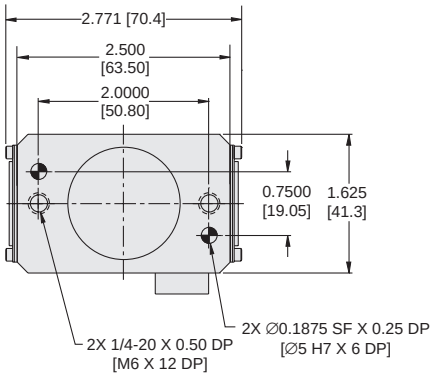


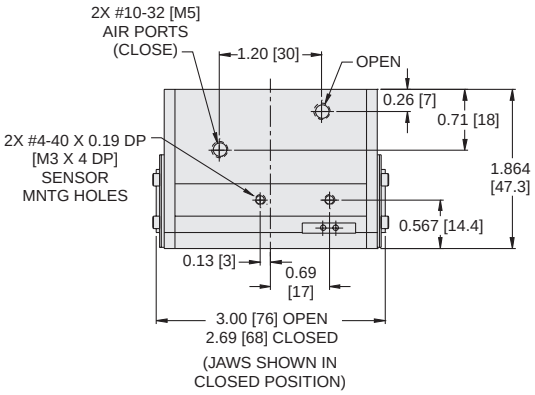


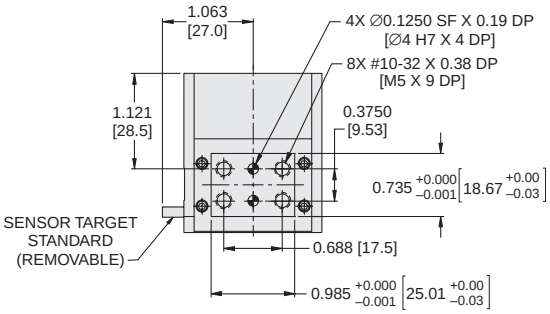


**Dimensions in inch [mm].**





**Parker Hannifin Corporation**
Actuator Division
Wadsworth, Ohio USA

## P5G-HP-17M-V

| | | |
|---|---|---|
| Total Grip Force (100 psi @ 1 in) | 208 lbs | 925 N |
| Stroke | 0.75 in | 19 mm |
| Weight | 2.3 lbs | 1.1 kg |
| Bore Size | 1.813 in | 46.1 mm |
| Cylinder Volume | 1.4 $in^3$ | 22.9 $cm^3$ |
| Repeatability | ± 0.001 in | ± 0.03 mm |
| Temperature Range* | -30° to 180° F | -35° to 80° C |
| Pressure Range | 40-100 psi | 3-7 bar |
| Filtration Requirement | 40 micron (dry air) | |

* Fluorocarbon seals available for high temperature applications

***Note: See model code and ordering information page for complete part number selection.***

## Loading Information

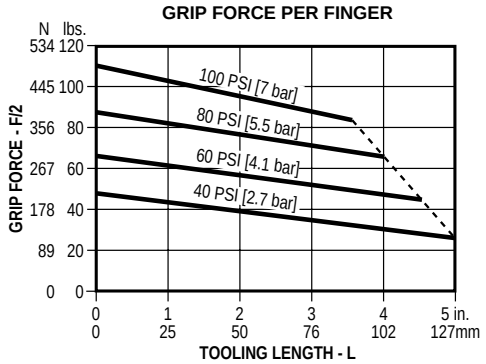


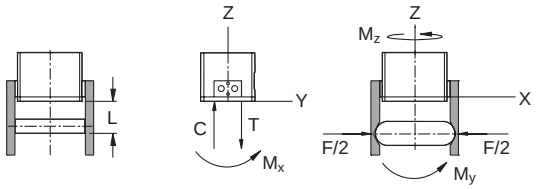


### Maximum Loading Capacity

| | Static | | Dynamic | |
|---|---|---|---|---|
| Axial Forces (C,T) | 750 lbs | 3336 N | 100 lbs | 445 N |
| Moment (Mx) | 750 in-lbs | 85 Nm | 125 in-lbs | 14 Nm |
| Moment (My) | 750 in-lbs | 85 Nm | 125 in-lbs | 14 Nm |
| Moment (Mz) | 750 in-lbs | 85 Nm | 125 in-lbs | 14 Nm |

## Dimensional Information

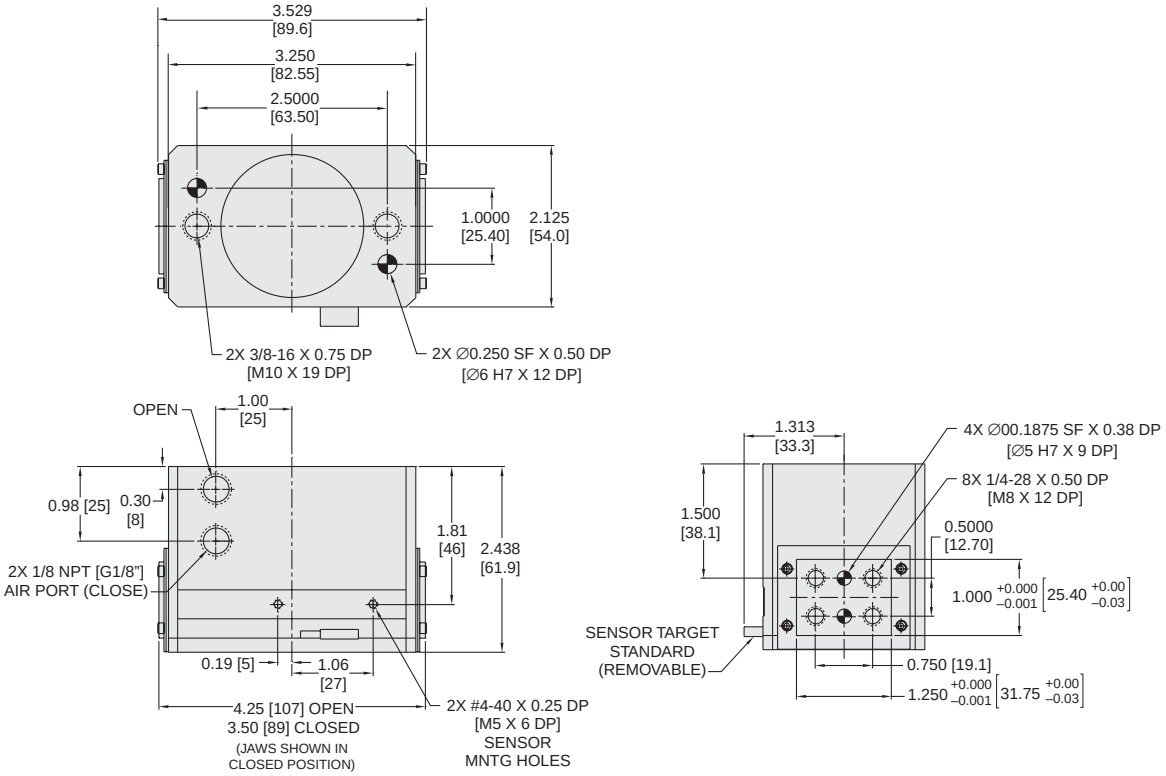


**Dimensions in inch [mm].**



**Parker Hannifin Corporation**
Actuator Division
Wadsworth, Ohio USA

## P5G-HP-17M-D-V

| | | |
|---|---|---|
| Total Grip Force (100 psi @ 1 in) | 120 lbs | 533 N |
| Stroke | 1.10 in | 28 mm |
| Weight | 2.3 lbs | 1.1 kg |
| Bore Size | 1.813 in | 46.1 mm |
| Cylinder Volume | 1.4 $in^3$ | 22.9 $cm^3$ |
| Repeatability | ± 0.001 in | ± 0.03 mm |
| Temperature Range* | -30° to 180° F | -35° to 80° C |
| Pressure Range | 40-100 psi | 3-7 bar |
| Filtration Requirement | 40 micron (dry air) | |

* Fluorocarbon seals available for high temperature applications

***Note: See model code and ordering information page for complete part number selection.***



## Loading Information

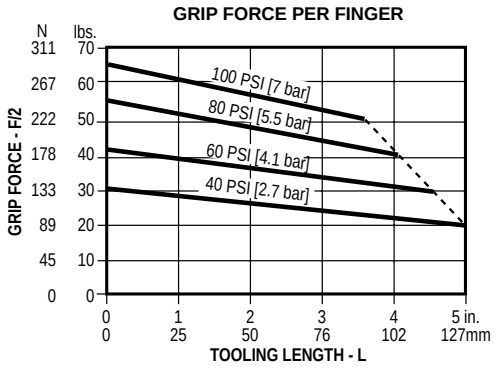


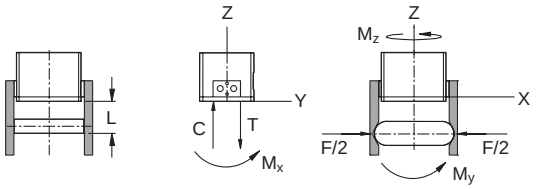


### Maximum Loading Capacity

| | Static | | Dynamic | |
|---|---|---|---|---|
| Axial Forces (C,T) | 750 lbs | 3336 N | 100 lbs | 445 N |
| Moment (Mx) | 750 in-lbs | 85 Nm | 125 in-lbs | 14 Nm |
| Moment (My) | 750 in-lbs | 85 Nm | 125 in-lbs | 14 Nm |
| Moment (Mz) | 750 in-lbs | 85 Nm | 125 in-lbs | 14 Nm |

## Dimensional Information

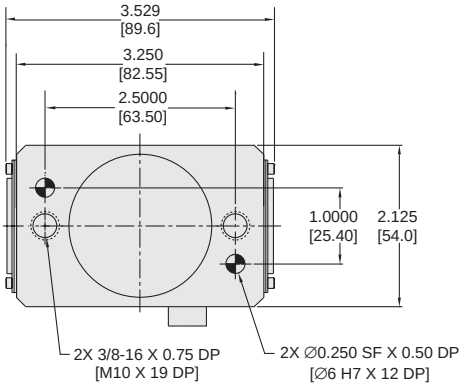


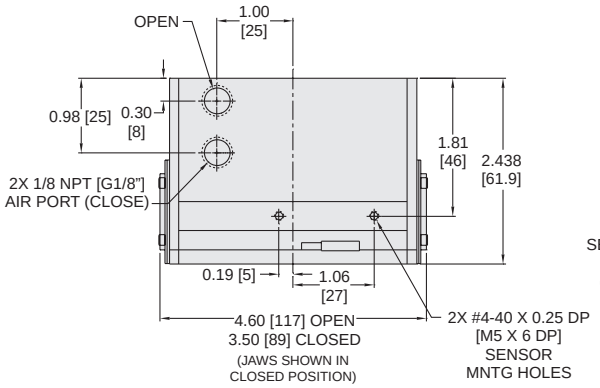


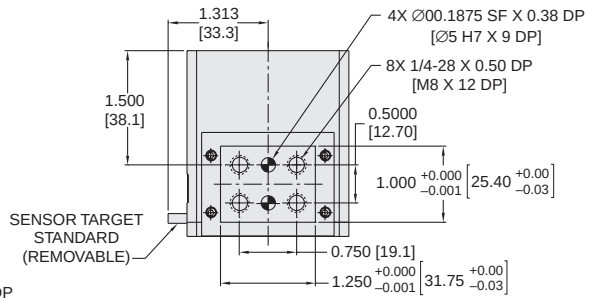


**Dimensions in inch [mm].**



**Parker Hannifin Corporation**
Actuator Division
Wadsworth, Ohio USA

## P5G-HP-18M-V

| | | |
|---|---|---|
| Total Grip Force (100 psi @ 1 in) | 390 lbs | 1735 N |
| Stroke | 1.25 in | 31.8 mm |
| Weight | 7.7 lbs | 3.5 kg |
| Bore Size | 2.5 in | 63.5 mm |
| Cylinder Volume | 4.4 $in^3$ | 72.1 $cm^3$ |
| Repeatability | ± 0.001 in | ± 0.03 mm |
| Temperature Range* | -30° to 180° F | -35° to 80° C |
| Pressure Range | 40-100 psi | 3-7 bar |
| Filtration Requirement | 40 micron (dry air) | |

* Fluorocarbon seals available for high temperature applications

***Note: See model code and ordering information page for complete part number selection.***

## Loading Information

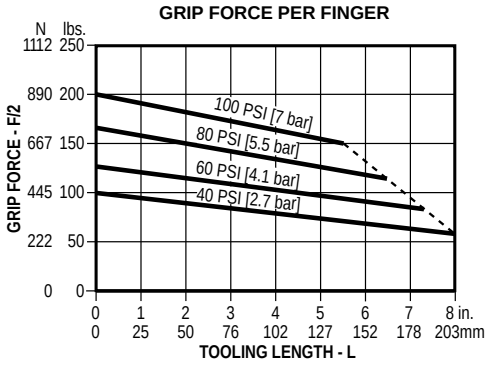


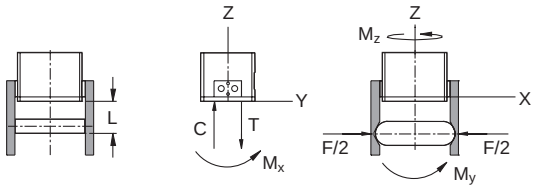


### Maximum Loading Capacity

| | Static | | Dynamic | |
|---|---|---|---|---|
| Axial Forces (C,T) | 1500 lbs | 6672 N | 250 lbs | 1112 N |
| Moment (Mx) | 1500 in-lbs | 170 Nm | 250 in-lbs | 28 Nm |
| Moment (My) | 1500 in-lbs | 170 Nm | 250 in-lbs | 28 Nm |
| Moment (Mz) | 1500 in-lbs | 170 Nm | 250 in-lbs | 28 Nm |

## Dimensional Information

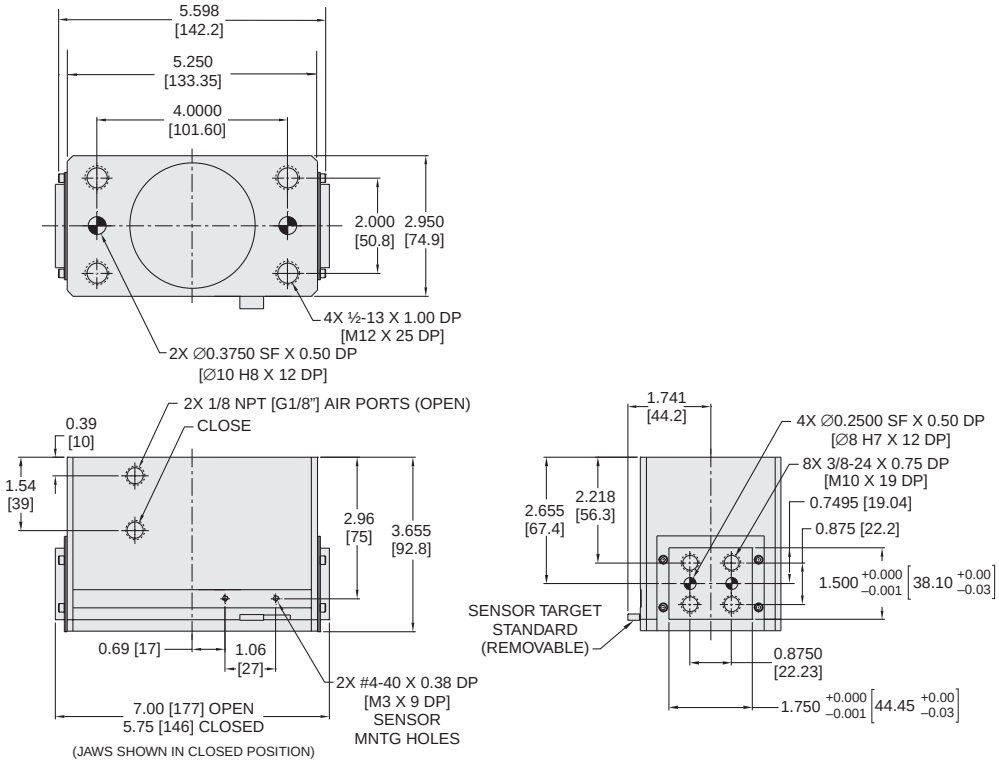


**Dimensions in inch [mm].**



**Parker Hannifin Corporation**
Actuator Division
Wadsworth, Ohio USA

## P5G-HP-18M-D-V

| | | |
|---|---|---|
| Total Grip Force (100 psi @ 1 in) | 238 lbs | 1058 N |
| Stroke | 1.70 in | 43 mm |
| Weight | 7.7 lbs | 3.5 kg |
| Bore Size | 2.5 in | 63.5 mm |
| Cylinder Volume | 4.4 $in^3$ | 72.1 $cm^3$ |
| Repeatability | ± 0.001 in | ± 0.03 mm |
| Temperature Range* | -30° to 180° F | -35° to 80° C |
| Pressure Range | 40-100 psi | 3-7 bar |
| Filtration Requirement | 40 micron (dry air) | |

* Fluorocarbon seals available for high temperature applications

***Note: See model code and ordering information page for complete part number selection.***



## Loading Information

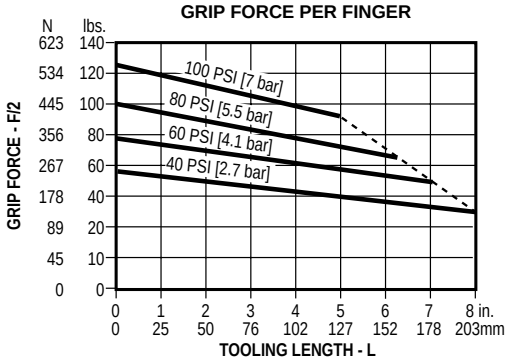


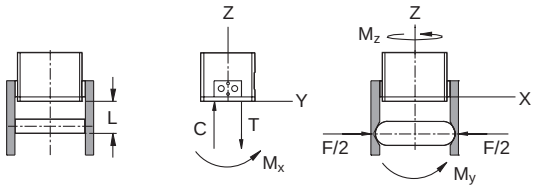


### Maximum Loading Capacity

| | Static | | Dynamic | |
|---|---|---|---|---|
| Axial Forces (C,T) | 1500 lbs | 6672 N | 250 lbs | 1112 N |
| Moment (Mx) | 1500 in-lbs | 170 Nm | 250 in-lbs | 28 Nm |
| Moment (My) | 1500 in-lbs | 170 Nm | 250 in-lbs | 28 Nm |
| Moment (Mz) | 1500 in-lbs | 170 Nm | 250 in-lbs | 28 Nm |

## Dimensional Information

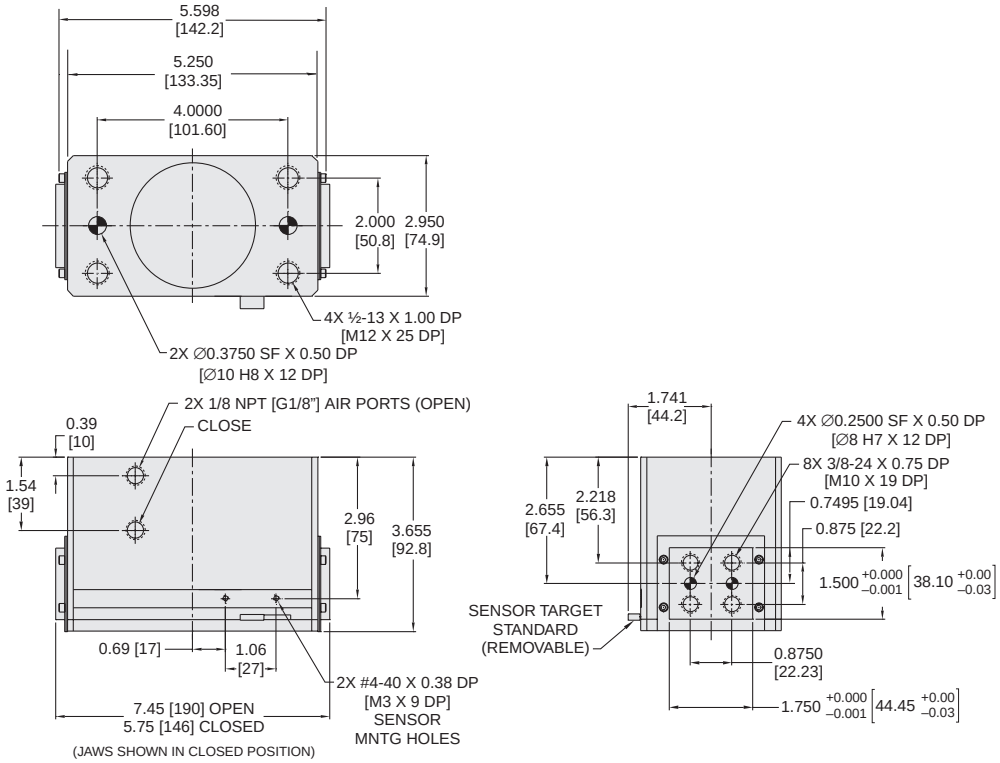


**Dimensions in inch [mm].**



**Parker Hannifin Corporation**
Actuator Division
Wadsworth, Ohio USA

## P5G-HP-19M-V

| | | |
|---|---|---|
| Total Grip Force (100 psi @ 1 in) | 590 lbs | 2624 N |
| Stroke | 2 in | 50.8 mm |
| Weight | 21 lbs | 9.5 kg |
| Bore Size | 3.5 in | 88.9 mm |
| Cylinder Volume | 9.6 $in^3$ | 157.3 $cm^3$ |
| Repeatability | ± 0.001 in | ± 0.03 mm |
| Temperature Range* | -30° to 180° F | -35° to 80° C |
| Pressure Range | 40-100 psi | 3-7 bar |
| Filtration Requirement | 40 micron (dry air) | |

* Fluorocarbon seals available for high temperature applications

***Note: See model code and ordering information page for complete part number selection.***

## Loading Information

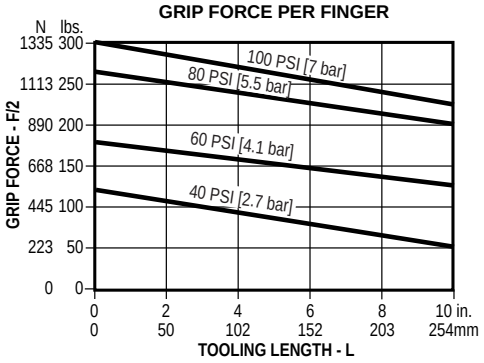


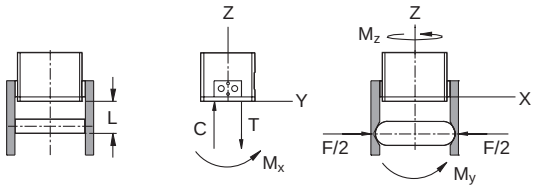


### Maximum Loading Capacity

| | Static | | Dynamic | |
|---|---|---|---|---|
| Axial Forces (C,T) | 3000 lbs | 13345 N | 300 lbs | 1334 N |
| Moment (Mx) | 5000 in-lbs | 565 Nm | 500 in-lbs | 56 Nm |
| Moment (My) | 5000 in-lbs | 565 Nm | 500 in-lbs | 56 Nm |
| Moment (Mz) | 5000 in-lbs | 565 Nm | 500 in-lbs | 56 Nm |

## Dimensional Information

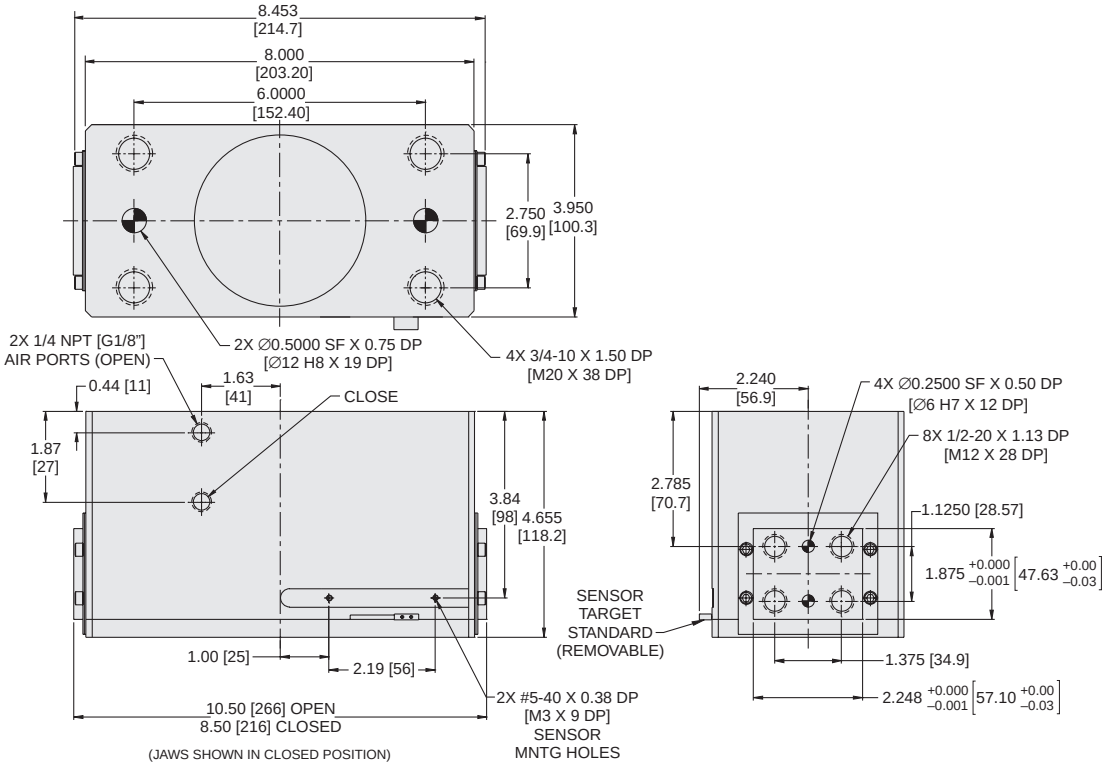


**Dimensions in inch [mm].**



**Parker Hannifin Corporation**
Actuator Division
Wadsworth, Ohio USA

## P5G-HP-19M-D-V

| | | |
|---|---|---|
| Total Grip Force (100 psi @ 1 in) | 694 lbs | 3087 N |
| Stroke | 1.50 in | 38 mm |
| Weight | 21 lbs | 9.5 kg |
| Bore Size | 3.5 in | 88.9 mm |
| Cylinder Volume | 9.6 $in^3$ | 157.3 $cm^3$ |
| Repeatability | ± 0.001 in | ± 0.03 mm |
| Temperature Range* | -30° to 180° F | -35° to 80° C |
| Pressure Range | 40-100 psi | 3-7 bar |
| Filtration Requirement | 40 micron (dry air) | |

* Fluorocarbon seals available for high temperature applications

***Note: See model code and ordering information page for complete part number selection.***



## Loading Information

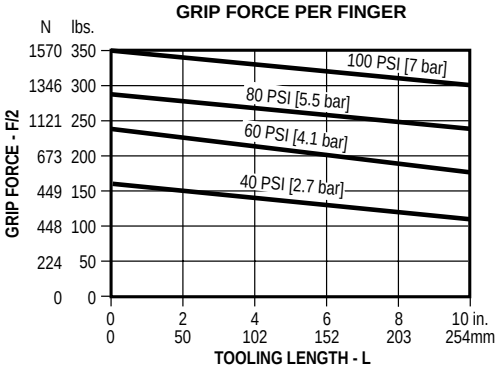


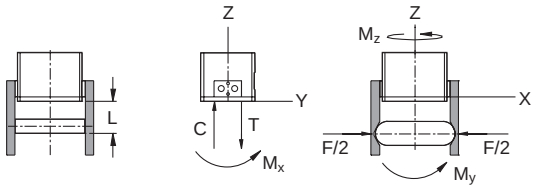


### Maximum Loading Capacity

| | Static | | Dynamic | |
|---|---|---|---|---|
| Axial Forces (C,T) | 3000 lbs | 13345 N | 300 lbs | 1334 N |
| Moment (Mx) | 5000 in-lbs | 565 Nm | 500 in-lbs | 56 Nm |
| Moment (My) | 5000 in-lbs | 565 Nm | 500 in-lbs | 56 Nm |
| Moment (Mz) | 5000 in-lbs | 565 Nm | 500 in-lbs | 56 Nm |

## Dimensional Information

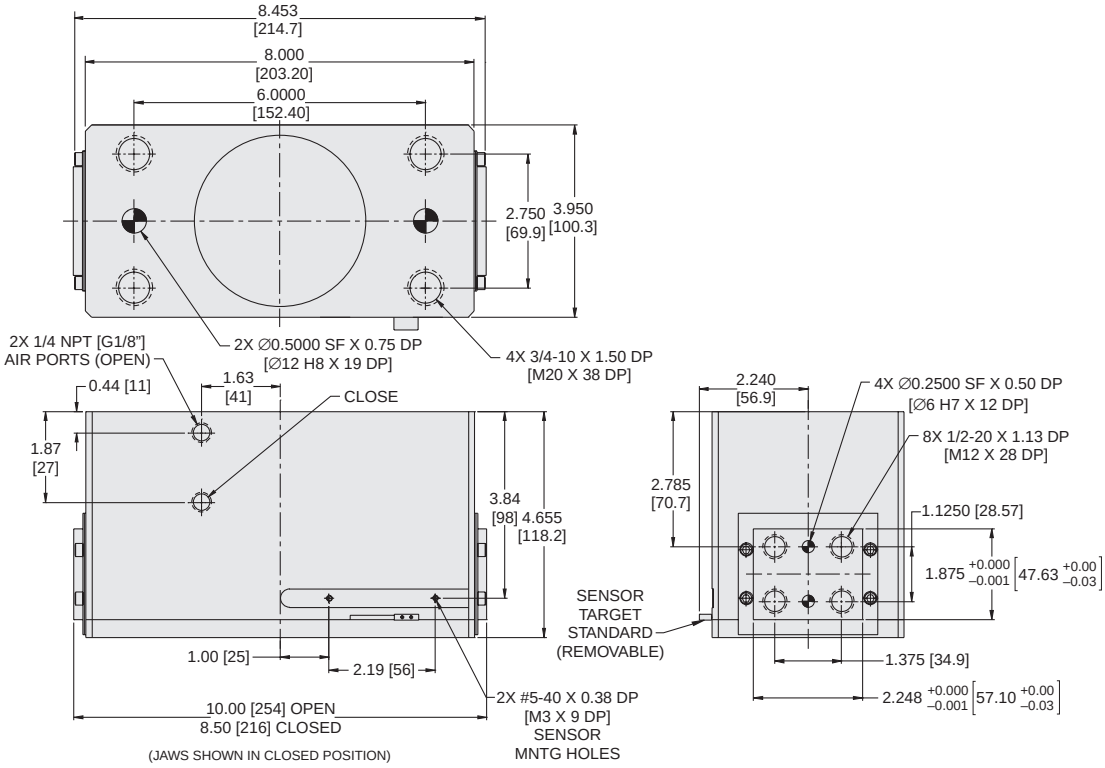


**Dimensions in inch [mm].**



**Parker Hannifin Corporation**
Actuator Division
Wadsworth, Ohio USA

## Metric Option (M)

When using the P5G-HP series in metric applications, metric mounting and ports can be specified with the Metric Option. When specifying this option, the gripper incorporates metric threads and BSPG ports.

Reference the dimensional drawing for each size gripper for more details.

## Spring Options (FS, O, C)

The P5G-HP series gripper can be ordered as a single acting or double acting in either spring open or closed configuration. The gripper will close under pressure loss.

Ordering a gripper with a spring function can reduce the number or type of directional control valves needed in a pneumatic system.

***NOTE:*** *Spring option not available on P5G-HP10.*

| Size | Total Force (F) lbf | Grip Force (F/2) lbf | Spring Force lbf |
|---|---|---|---|
| P5G-HP5 | 12 | 6 | 4 |
| P5G-HP10 | N/A | N/A | N/A |
| P5G-HPS11 | 34 | 17 | 6 |
| P5G-HPS11-D | 60 | 30 | 12 |
| P5G-HPS12 | 44 | 22 | 6 |
| P5G-HPS12-D | 64 | 32 | 12 |
| P5G-HPS15 | 66 | 33 | 12 |
| P5G-HPS15-D | 76 | 38 | 18 |
| P5G-HPS17 | 206 | 103 | 30 |
| P5G-HPS17-D | 130 | 65 | 25 |
| P5G-HPS18 | 420 | 210 | 50 |
| P5G-HPS18-D | 300 | 150 | 35 |

* Total grip force at 75 psi, tooling length of 1 inch, and 25% of total gripper stroke

** Spring force taken at tooling length less than 2 inches

***Note:*** *The actual grip force will change for a single acting gripper.*

## Fluorocarbon Seals (V)

Standard nitrile seals should be used for general purpose applications with temperatures of –30° to 180° F (-35° to 80° C). Fluorocarbon seals are recommended for high temperature applications up to 250° F (120° C).

| Seal Type | Temperature Range |
|---|---|
| Standard Buna-N | -30° to 180°F (-35° to 80°C) |
| Fluorocarbon | -20° to 250°F (-30° to 120°C) |

## Proximity Sensors

Proximity Sensors provide feedback on the position of the gripper fingers by sensing the metal flag which is attached to the gripper jaw. The sensor bracket is adjustable to provide sensing along the stroke of the gripper finger.

Order sensors, cables and brackets separately. See Sensor section for part numbers and specifications.

### HP-5

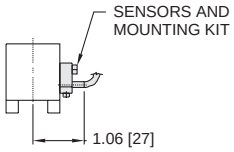


### HP-10

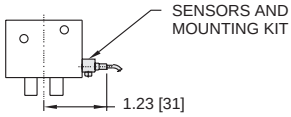


### HP-11/11D

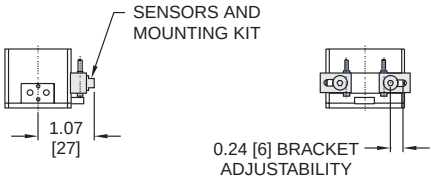


### HP-12/12D, HP-15/15D

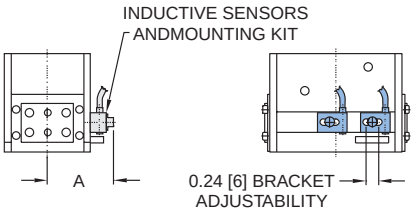


### HP-17/17D, HP-18/18D, HP-19/19D

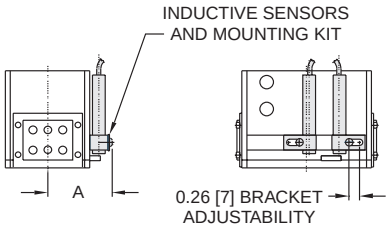


### Dimensions

| Model | A inch (mm) |
|---|---|
| HP-12/12D | 1.19 (30) |
| HP-15/15D | 1.25 (32) |
| HP-17/17D | 1.61 (41) |
| HP-18/18D | 2.03 (51) |
| HP-19/19D | 1.61 (41) |

## Seal Kits

| Size | Nitrile Seal Kit | Fluorocarbon Seal Kit |
|---|---|---|
| P5G-HP-5 | PSK-P5G-HP-5 | PSK-P5G-HP-5V |
| P5G-HP-10 | PSK-P5G-HP-10 | PSK-P5G-HP-10V |
| P5G-HP-11 | PSK-P5G-HP-11 | PSK-P5G-HP-11V |
| P5G-HP-12 | PSK-P5G-HP-12 | PSK-P5G-HP-12V |
| P5G-HP-15 | PSK-P5G-HP-15 | PSK-P5G-HP-15V |
| P5G-HP-17 | PSK-P5G-HP-17 | PSK-P5G-HP-17V |
| P5G-HP-18 | PSK-P5G-HP-18 | PSK-P5G-HP-18V |
| P5G-HP-19 | PSK-P5G-HP-19 | PSK-P5G-HP-19V |





**Parker Hannifin Corporation**
Actuator Division
Wadsworth, Ohio USA

## Model Code and Ordering Information

**P5G – HP S – 5 M – D – FS – V**

**Type**

P5G – Pneumatic Gripper

**Series**

HP – Parallel Wedge

**Spring**

Omit – Standard (No Spring)
S – With Spring Open/Close (Available on sizes 11-18 only)
*A spring option must be selected below.*

**Size**

5 – 0.75 in. Bore
10 – 1.00 in. Bore
11 – 1.00 in. Bore
12 – 1.00 in. Bore
15 – 1.25 in. Bore
17 – 1.813 in. Bore
18 – 2.50 in. Bore
19 – 3.50 in. Bore

**Design**

Omit – Imperial Design (Standard)
M – Metric Threads and BSPG Ports

**Stroke**

| | Size 5 | Size 10 | Size 11 | Size 12 | Size15 | Size 17 | Size 18 | Size 19 |
|---|---|---|---|---|---|---|---|---|
| Omit – | 0.16 in. | 0.25 in. | 0.25 in. | 0.38 in. | 0.50 in. | 0.75 in. | 1.25 in. | 2.00 in. |
| D – | N/A | N/A | 0.16 in. | 0.24 in. | 0.31 in. | 1.10 in. | 1.70 in. | 1.50 in. |

**Spring Options**

Omit – No Spring (Standard)
FS – Fail Safe Close (Size 5 only)
C – Spring Close (Sizes 11, 12, 15, 17 and 18)
O – Spring Open (Sizes 11, 12, 15, 17 and 18)

**Seals**

Omit – Nitrile Seals (Standard)
V – Fluorocarbon Seals

**See previous page for seal kit part numbers.**

## Features

**Jaws**
Fingers are made from steel for added strength and durability. Multiple holes facilitate mounting of end effect tooling.

**Seals**
Self lubricating dynamic seals (Nitrile of Fluorocarbon)

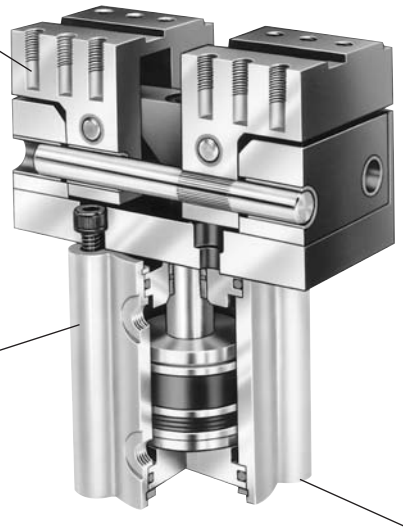

**Magnetic Piston**
Magnetic piston is standard.

**One-piece Anodized Body**
Body is machined from one-piece aluminum extrusion. The extrusion is hard coat anodized and permanently sealed, resulting in a smooth, slick seal surface which guarantees long seal life and low breakaway pressures.

**Mounting Flexibility**
Combination side and base tapped holes are standard and provide for design flexibility. The base mount includes a pilot diameter for alignment. Mounting kits are also available to interface with other Parker automation components.



## Operation

| | |
|---|---|
| Operating Characteristic | Double acting |
| Gripping Force @ 100 PSI | 22 - 43 lbs |
| Stroke | 0.625 in. |
| Operating Pressure Range | 10 - 100 PSI (0.7 - 7 bar) |

## Mounting

Gripper mounts with screws and locates with center pilot diameter for accuracy.

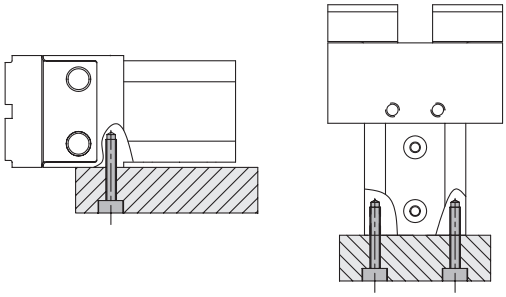

**WARNING!** Protect drive and bearing mechanism from falling debris when mounted with fingers up.

## Contents

GPT101 ..... 40
GPT151 ..... 41
Right Angle Flow Controls ..... 42
Port Location Option ..... 42
Proximity Mounting Bracket Option ..... 42
Magnetic Piston Option ..... 43
Hall Effect and Reed Switches ..... 43
Fluorocarbon Seals ..... 43
Ordering Information ..... 44
Seal Kits ..... 44



**Parker Hannifin Corporation**
Actuator Division
Wadsworth, Ohio USA

# GPT101

| | | |
|---|---|---|
| Total Grip Force (100 psi @ 1 in) | 46 lbs | 204 N |
| Stroke | 0.625 in | 15.875 mm |
| Weight | 1.2 lbs | 0.54 kg |
| Bore Size | 1.0 in | 25.4 mm |
| Cylinder Volume | 0.254 $in^3$ | 4.16 $cm^3$ |
| Repeatability | ± 0.004 in | ± 0.10 mm |
| Temperature Range* | 0° to 180° F | 17° to 80° C |
| Pressure Range | 10-100 psi | 0.7-7 bar |
| Filtration Requirement | 40 micron (dry air) | |

* Fluorocarbon seals available for high temperature applications

***Note: See model code and ordering information page for complete part number selection.***

## Loading Information

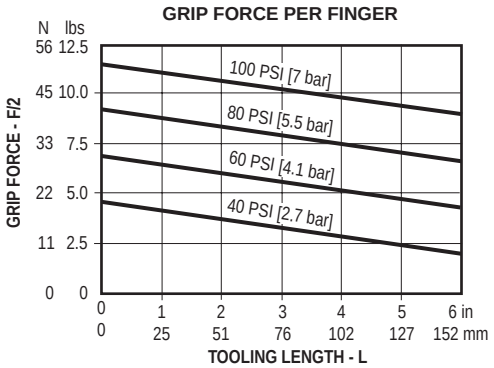


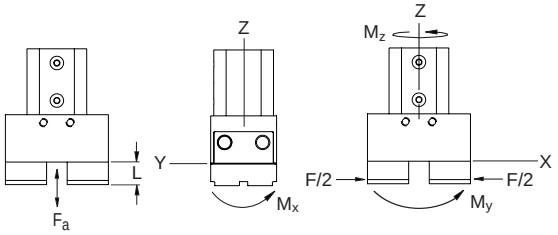


### Maximum Loading Capacity

| Load | Static | |
|---|---|---|
| Axial Forces (Fa) | 18 lbs | 80 N |
| Moment (Mx) | 22 in-lbs | 2.5 Nm |
| Moment (My) | 22 in-lbs | 2.5 Nm |
| Moment (Mz) | 12 in-lbs | 1.4 Nm |

## Dimensional Information

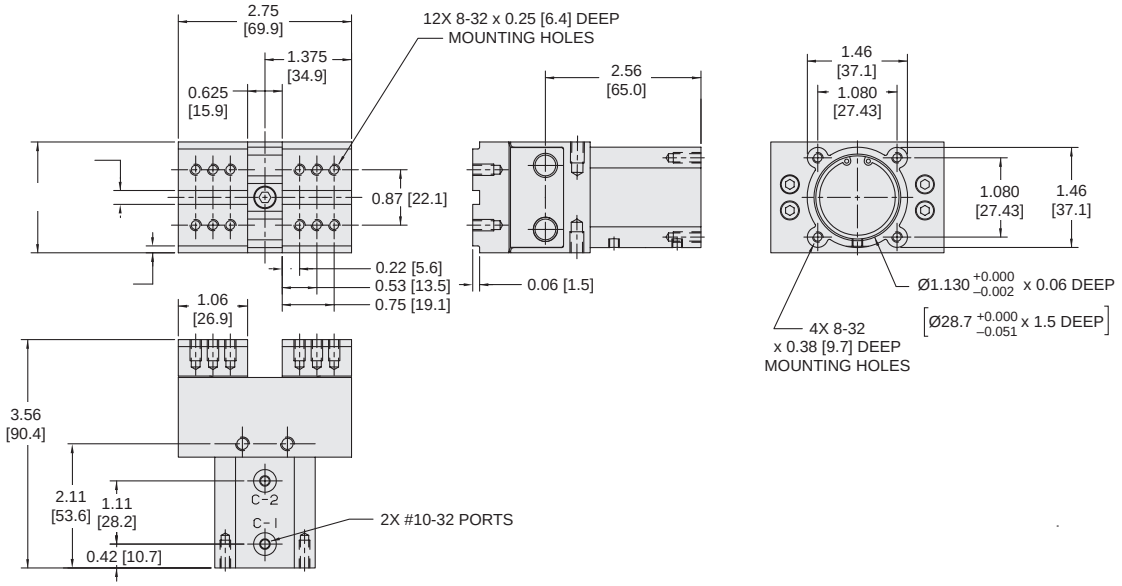


**Dimensions in inch [mm].**



**Parker Hannifin Corporation**
Actuator Division
Wadsworth, Ohio USA

# GPT151

| | | |
|---|---|---|
| Total Grip Force (100 psi @ 1 in) | 86 lbs | 382 N |
| Stroke | 0.625 in | 15.875 mm |
| Weight | 2.1 lbs | 0.95 kg |
| Bore Size | 1.5 in | 38.1 mm |
| Cylinder Volume | 0.541 $in^3$ | 8.87 $cm^3$ |
| Repeatability | ± 0.004 in | ± 0.10 mm |
| Temperature Range* | 0° to 180° F | 17° to 80° C |
| Pressure Range | 10-100 psi | 0.7-7 bar |
| Filtration Requirement | 40 micron (dry air) | |

* Fluorocarbon seals available for high temperature applications

***Note: See model code and ordering information page for complete part number selection.***



## Loading Information

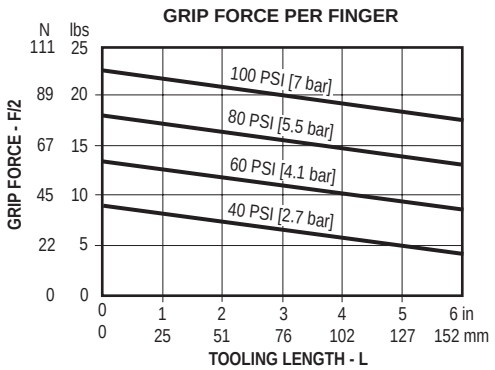


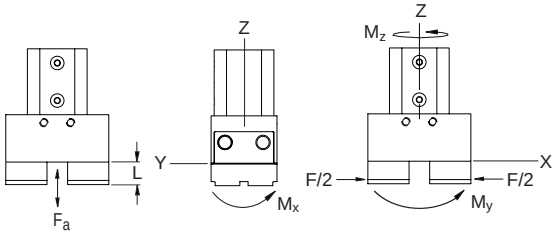


### Maximum Loading Capacity

| Load | Static | |
|---|---|---|
| Axial Forces (Fa) | 28 lbs | 124 N |
| Moment (Mx) | 30 in-lbs | 3.4 Nm |
| Moment (My) | 30 in-lbs | 3.4 Nm |
| Moment (Mz) | 17 in-lbs | 2.0 Nm |

## Dimensional Information

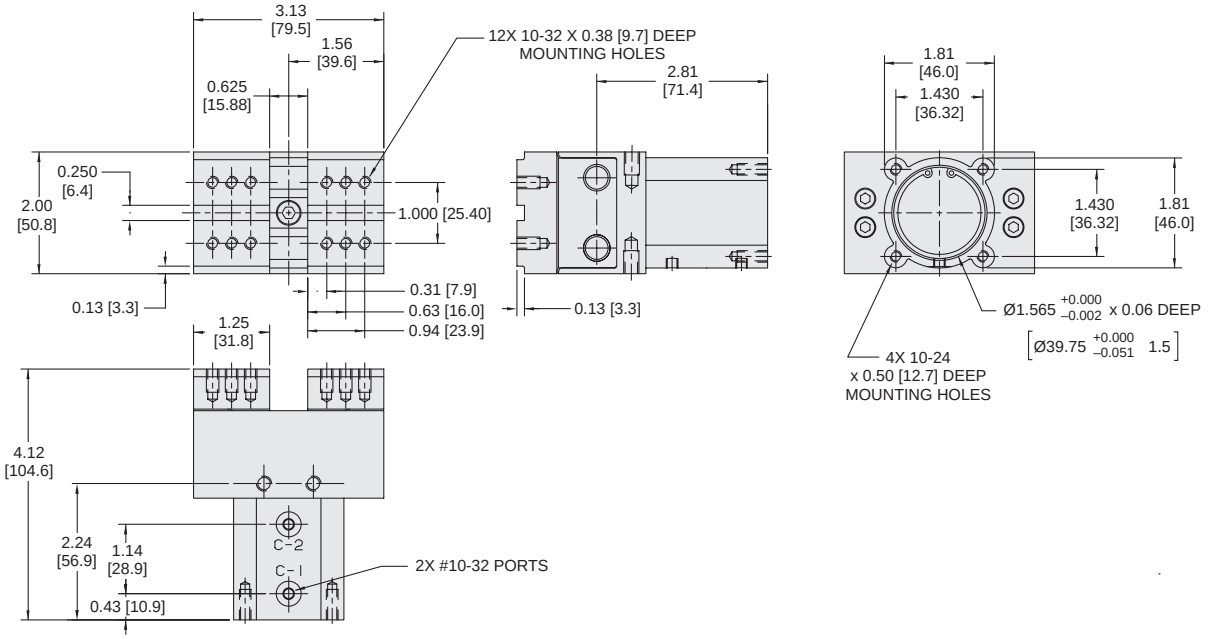


**Dimensions in inch [mm].**



**Parker Hannifin Corporation**
Actuator Division
Wadsworth, Ohio USA

## Right Angle Flow Control (P)

Right angle flow control valves allow precise adjustment of cylinder speed by metering exhaust air flow. Presto-Lok push-in ports provide 360° orientation capability.

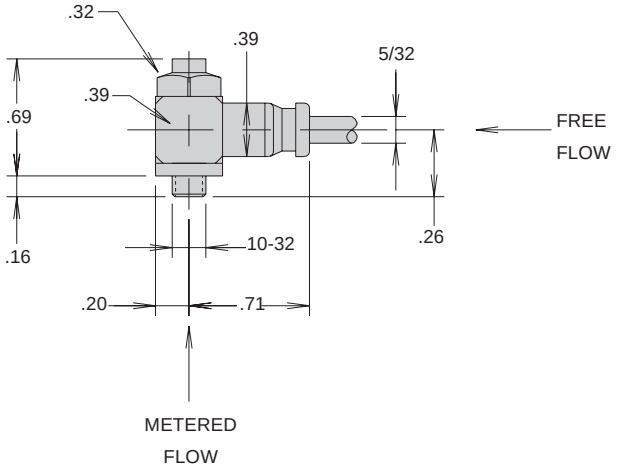


## Port Location (1, 2)

GP Series grippers are symmetrical. Ports position 1 is standard. Position 3 can be obtained by rotating the gripper 180°. Ports position 2 is an option. Position 4 is obtainable by ordering port position 2 and rotating 180°.

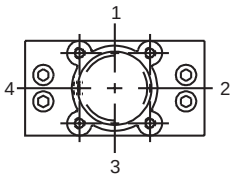


## Proximity Sensor Bracket (J)

Proximity sensors sense the position of the flag that is attached to the gripper finger. The flag is held onto the gripper finger by a set screw. Loosening the set screw allows positioning of the flag to sense any position of the gripper finger. Care should be taken when adjusting the proximity sensor so that the flag does not physically contact the sensor. The distance from the flag to the sensor should be approximately 0.04 inches.

Order proximity sensor separately. See Sensor section for part number and specification data.

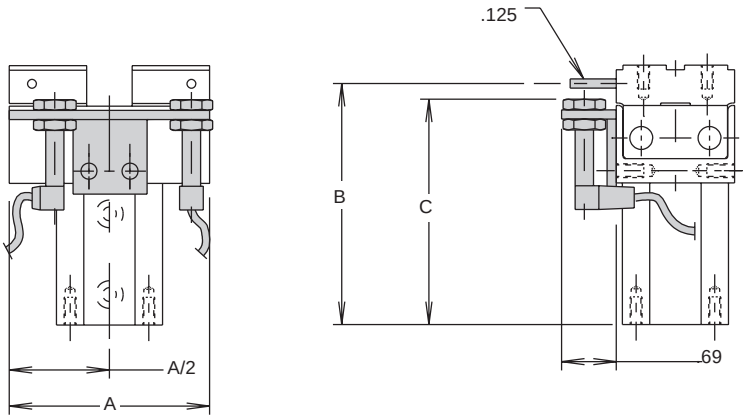


| Model | A | B | C |
|---|---|---|---|
| 10 | 2.75 | 3.31 | 3.10 |
| 15 | 3.13 | 3.75 | 3.23 |

## Magnetic Piston (M)

This option prepares the actuator for use with reed and Hall effect switches. The "M" option should be specified to provide a magnet on the cylinder piston.

Order switches separately. See Sensor section for part number and specification data.

## Hall Effect and Reed Switches

Order switches separately. See the Sensors section for part numbers and specifications.

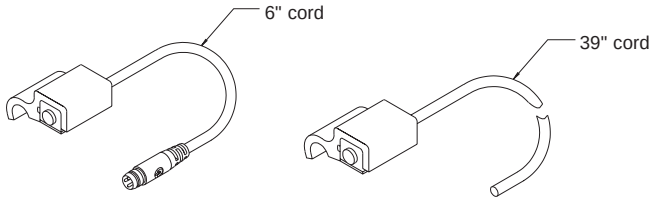


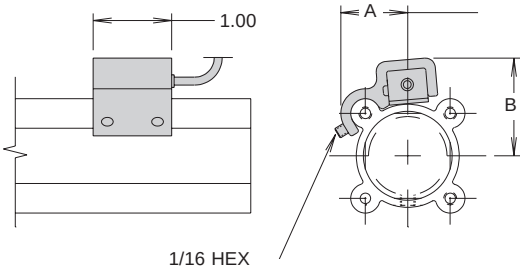


### Dimensions

| Model | A | B |
|---|---|---|
| 10 | .84 | 1.22 |
| 15 | .99 | 1.46 |

## Fluorocarbon Seals (V)

Standard abrasion resistant nitrile seals should be used for general purpose applications with temperatures of 0° to 180°F.

Fluorocarbon seals are recommended for high temperature applications up to 250°F.

| Option | Temperature Range (°F) |
|---|---|
| Bumpers | 0 - 200 |
| Piston Magnets | 0 - 165 |
| Switches | 14 - 140 |
| Proximity Sensor | -13 - 158 |

## Model Code and Ordering Information

| GP | T | 15 | 1 | P | – | A | 2 | 1 | J | V | – | A |
|---|---|---|---|---|---|---|---|---|---|---|---|---|

**Series**
GP - Parallel gripper

**Type**
T - True Parallel

**Size**
10 - 1 in. bore
15 - 1.5 in. bore

**Opening Characteristics**
1 - Double acting (STD)

**Flow Controls**
Omit - None
P - Right angle flow control (both)

**Mounting**
A - Rear and side tapped holes (STD)

**Port Type**
2 - 10-32 (STD)
8 - Presto-Lok right angle flow control

**Port Location**
1 - Position 1 (STD)
2 - Position 2

**Switches**
Omit - N/A
J - Bracket for proximity sensor option*
M - Magnetic piston for reed and Hall Effect switch option*

**Seals**
Omit - Nitrile (STD)
V - Fluorocarbon

**Design Series**
A - Current Design Series

* Proximity sensor, Hall Effect, and reed switches to be ordered separately. See Sensors section.

## Seal Kits

| Size | Nitrile Seal Kit | Fluorocarbon Seal Kit |
|---|---|---|
| GPT10 | PSK-G10 | PSK-G10V |
| GPT15 | PSK-G15 | PSK-G15V |



**Parker Hannifin Corporation**
Actuator Division
Wadsworth, Ohio USA

## Features

**Bumpers**
Bumpers reduce noise and dissipate energy, thus permitting faster cycle times and increased production rates.

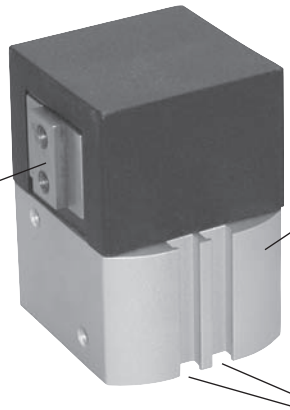

**Jaws**
Hardened alloy steel jaws are available for standard or extended travel. Unique design permits maximum jaw travel without loss of grip force.

**Body**
Machined from an aluminum extrusion, the body is anodized and permanently sealed. This results in a smooth, slick surface which guarantees long seal life and low breakaway pressure.

**Sensors**
All gripper sizes are equipped with two standardized sensor grooves. Grippers may be ordered with proximity, Hall effect or reed switches or as "prox ready".

**Magnetic Piston**
Standard on all P5G-AP Series grippers.

**Multiple Function**
Jaw travel can be ordered for maximum grip open or grip close.



## Operation

| | |
|---|---|
| Operating Characteristic | Double acting |
| Gripping Force @ 100 PSI | 137-925N (31-208 lbs) |
| Stroke Range | 5.3-10.5 mm |
| Operating Pressure Range | 4-100 PSI (0.3-7 bar) |

## Mounting

Gripper mounts with screws and locates with center pilot diameter for accuracy.

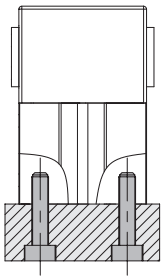

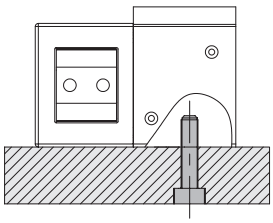

Gripper can be mounted in any orientation.

## Contents

P5G-AP3 ..... 46
P5G-AP4 ..... 47
P5G-AP5 ..... 48
P5G-AP6 ..... 49
Right Angle Flow Controls ..... 50
Extended Jaw Travel ..... 50
Spring Return Options ..... 51
Spring Assist Options ..... 52
Stroke Adjust Options ..... 53
Sensors ..... 54
Fluorocarbon Seals ..... 54
Ordering Information ..... 55
Seal Kits ..... 56



**Parker Hannifin Corporation**
Actuator Division
Wadsworth, Ohio USA

## P5G-AP3BANNNS-A

| | | |
|---|---|---|
| Total Grip Force (100 psi @ 1 in) | 31 lbs | 137 N |
| Stroke | 0.21 in | 5.3 mm |
| Weight | 0.25 lbs | 0.11 kg |
| Bore Size | 0.62 in | 16 mm |
| Cylinder Volume | 0.07 $in^3$ | 1.14 $cm^3$ |
| Repeatability | ± 0.003 in | ± 0.08 mm |
| Temperature Range* | -4° to 180° F | -20° to 82° C |
| Pressure Range | 4-100 psi | 0.3-7 bar |
| Filtration Requirement | 40 micron (dry air) | |

* Fluorocarbon seals available for high temperature applications

***Note: See model code and ordering information page for complete part number selection.***

## Loading Information

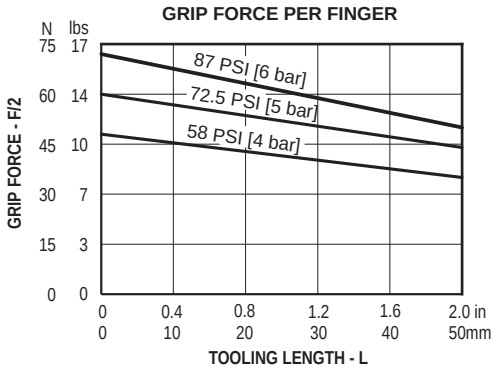


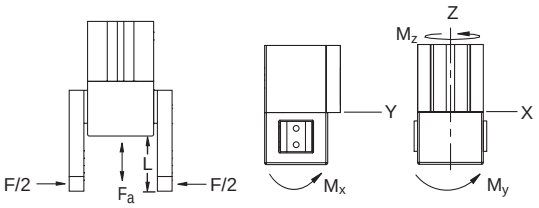


### Maximum Loading Capacity

| Load | Static | |
|---|---|---|
| Axial Forces ($F_a$) | 20.1 lbs | 88 N |
| Moment (Mx) | 38.7 in-lbs | 4.3 Nm |
| Moment (My) | 38.7 in-lbs | 4.3 Nm |
| Moment (Mz) | 37.8 in-lbs | 4.2 Nm |

## Dimensional Information

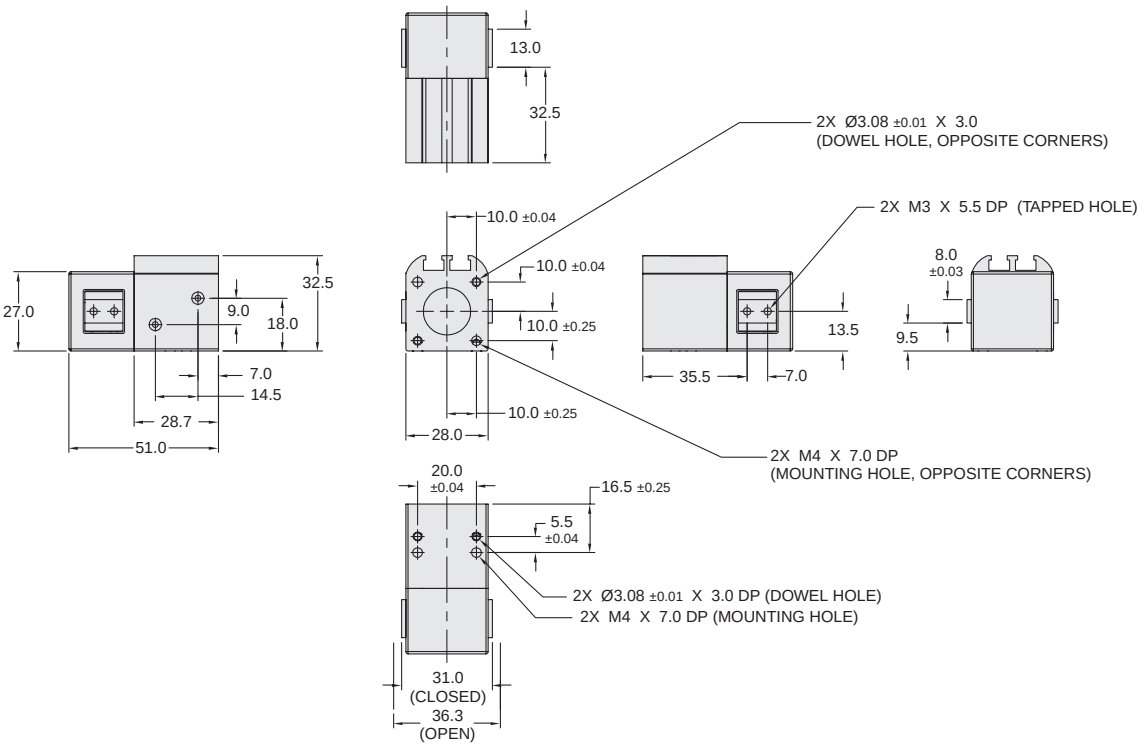


**Dimensions in mm.**



**Parker Hannifin Corporation**
Actuator Division
Wadsworth, Ohio USA

## P5G-AP4BANNNS-A

| | | |
|---|---|---|
| Total Grip Force (100 psi @ 1 in) | 78 lbs | 346 N |
| Stroke | 0.32 in | 8 mm |
| Weight | 0.53 lbs | 0.24 kg |
| Bore Size | 0.98 in | 25 mm |
| Cylinder Volume | 0.30 $in^3$ | 4.9 $cm^3$ |
| Repeatability | ± 0.003 in | ± 0.08 mm |
| Temperature Range* | -4° to 180° F | -20° to 82° C |
| Pressure Range | 4-100 psi | 0.3-7 bar |
| Filtration Requirement | 40 micron (dry air) | |

* Fluorocarbon seals available for high temperature applications

***Note: See model code and ordering information page for complete part number selection.***



## Loading Information

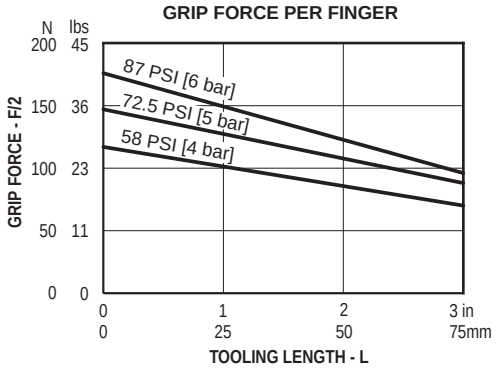


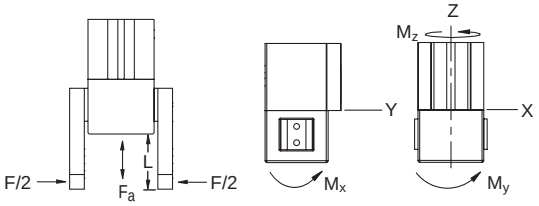


### Maximum Loading Capacity

| Load | Static | |
|---|---|---|
| Axial Forces ($F_a$) | 40 lbs | 175 N |
| Moment (Mx) | 49.5 in-lbs | 5.5 Nm |
| Moment (My) | 49.5 in-lbs | 5.5 Nm |
| Moment (Mz) | 40.5 in-lbs | 4.5 Nm |

## Dimensional Information

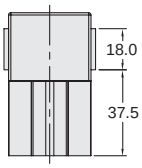


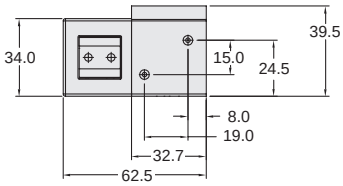


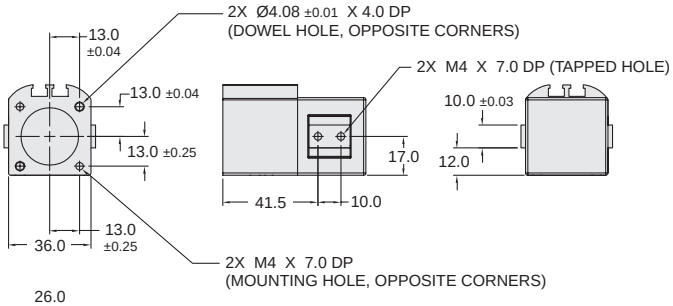


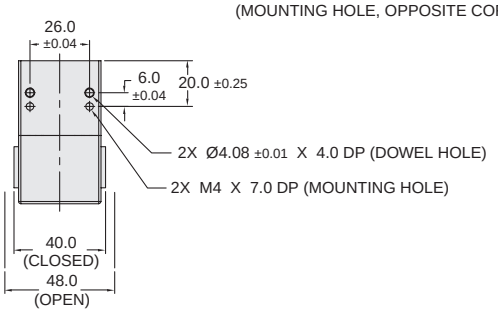


**Dimensions in mm.**



**Parker Hannifin Corporation**
Actuator Division
Wadsworth, Ohio USA

## P5G-AP5BANNNS-A

| | | |
|---|---|---|
| Total Grip Force (100 psi @ 1 in) | 117 lbs | 520 N |
| Stroke | 0.36 in | 9.2 mm |
| Weight | 0.81 lbs | 0.36 kg |
| Bore Size | 1.25 in | 32 mm |
| Cylinder Volume | 0.58 $in^3$ | 9.5 $cm^3$ |
| Repeatability | ± 0.003 in | ± 0.08 mm |
| Temperature Range* | -4° to 180° F | -20° to 82° C |
| Pressure Range | 4-100 psi | 0.3-7 bar |
| Filtration Requirement | 40 micron (dry air) | |

* Fluorocarbon seals available for high temperature applications

***Note: See model code and ordering information page for complete part number selection.***

## Loading Information

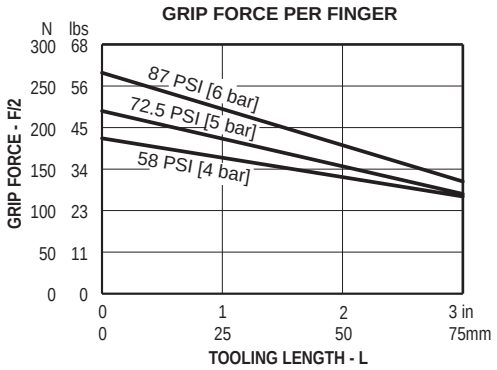


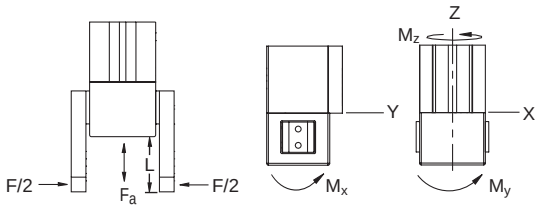


### Maximum Loading Capacity

| Load | Static | |
|---|---|---|
| Axial Forces (Fa) | 69.9 lbs | 306 N |
| Moment (Mx) | 76.4 in-lbs | 8.5 Nm |
| Moment (My) | 80.9 in-lbs | 9 Nm |
| Moment (Mz) | 53.1 in-lbs | 5.9 Nm |

## Dimensional Information

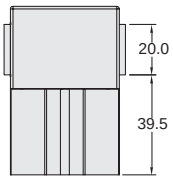


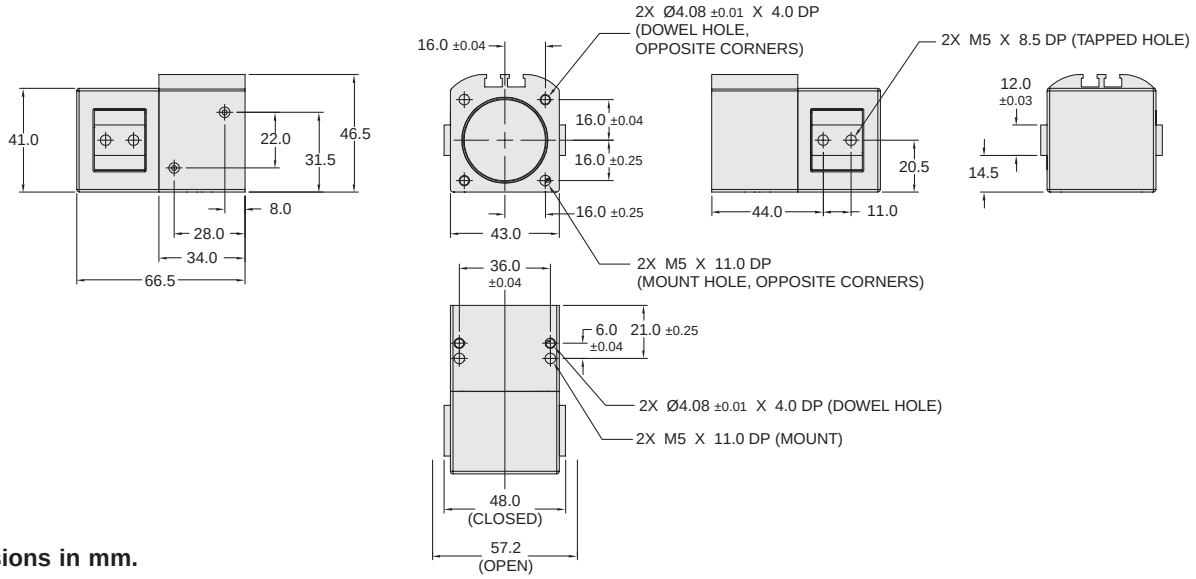


**Dimensions in mm.**



**Parker Hannifin Corporation**
Actuator Division
Wadsworth, Ohio USA

## P5G-AP6BANNNS-A

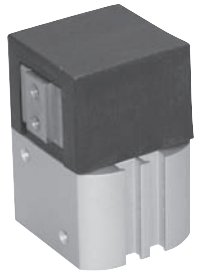

| | | |
|---|---|---|
| Total Grip Force (100 psi @ 1 in) | 208 lbs | 925 N |
| Stroke | 0.41 in | 10.5 mm |
| Weight | 1.19 lbs | 0.53 kg |
| Bore Size | 1.57 in | 40 mm |
| Cylinder Volume | 0.92 $in^3$ | 15 $cm^3$ |
| Repeatability | ± 0.003 in | ± 0.08 mm |
| Temperature Range* | -4° to 180° F | -20° to 82° C |
| Pressure Range | 4-100 psi | 0.3-7 bar |
| Filtration Requirement | 40 micron (dry air) | |

* Fluorocarbon seals available for high temperature applications

***Note: See model code and ordering information page for complete part number selection.***

## Loading Information

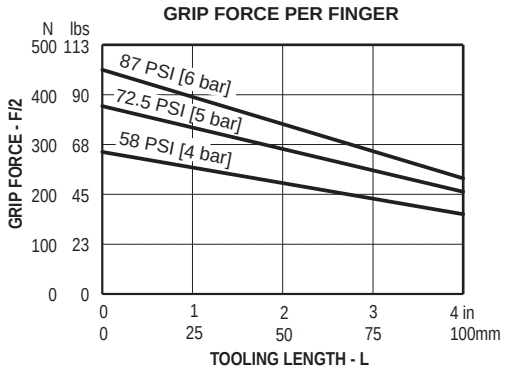


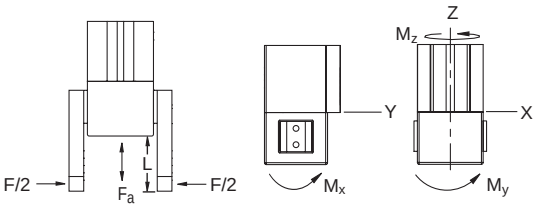


### Maximum Loading Capacity

| Load | Static | |
|---|---|---|
| Axial Forces ($F_a$) | 110.1 lbs | 482 N |
| Moment (Mx) | 116.9 in-lbs | 13 Nm |
| Moment (My) | 123.2 in-lbs | 13.7 Nm |
| Moment (Mz) | 75.5 in-lbs | 8.4 Nm |

## Dimensional Information

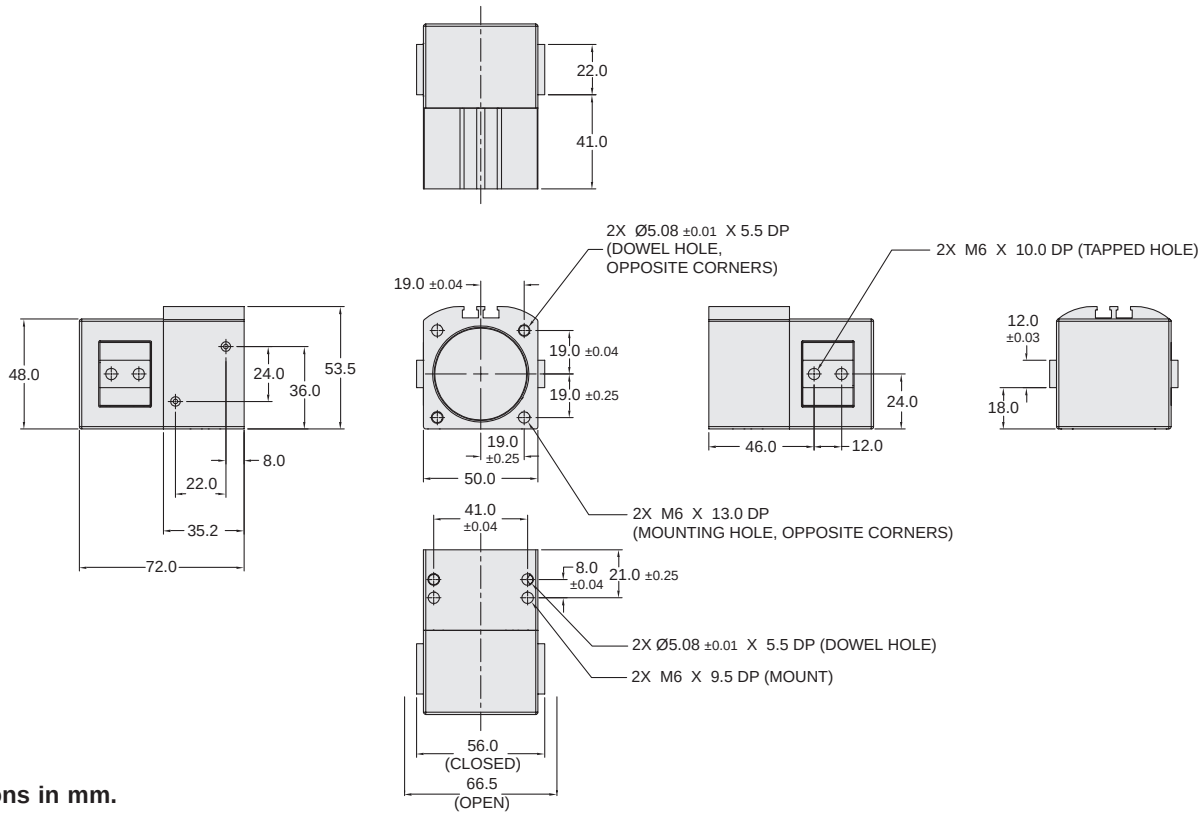


**Dimensions in mm.**





**Parker Hannifin Corporation**
Actuator Division
Wadsworth, Ohio USA

## Right Angle Flow Control (3)

Right angle flow control valves allow precise adjustment of speed by metering exhaust air flow. Presto-Lok push-in ports provide 360° orientation capability.

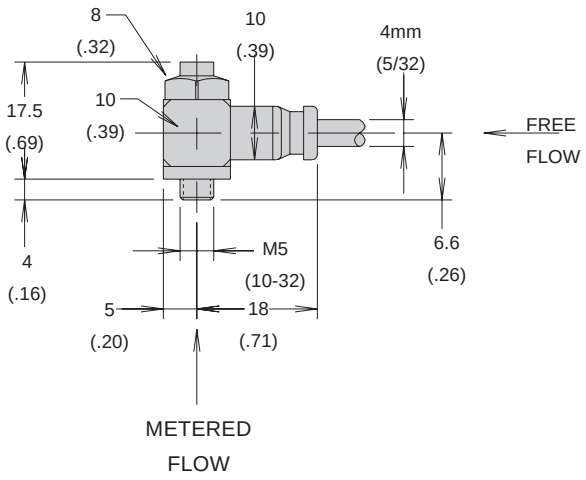


## Extended Jaw Travel

To utilize the extended travel jaws, the tooling must be designed to engage the workpiece in the maximum force portion of the travel (X).

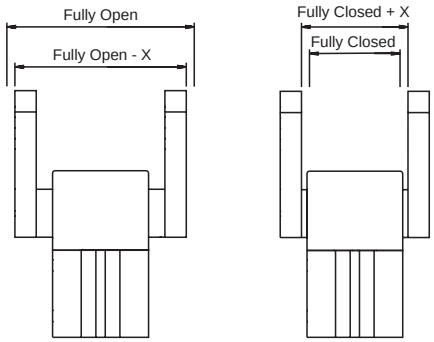


**Maximum Force Open** **Maximum Force Close**

| Spring Option | Model Size | Total Travel, mm (in) | Engagement and Maximum Force Travel (X), mm (in) | Max. Grip Force * during Engagement Travel | Transitional Travel, mm (in) | Grip Force * during Transitional Travel |
|---|---|---|---|---|---|---|
| No Spring | 3 | 9.4 (0.37) | 1.0 (0.04) | 60.0 (13.5) | 8.4 (0.33) | 4.8 (1.1) |
| | 4 | 14.0 (0.55) | 3.0 (0.12) | 147.0 (33.0) | 11.0 (0.43) | 11.7 (2.6) |
| | 5 | 15.6 (0.61) | 3.0 (0.12) | 220.0 (49.4) | 13.6 (0.49) | 17.6 (4.0) |
| | 6 | 17.9 (0.70) | 3.0 (0.12) | 377.0 (84.7) | 14.9 (0.58) | 30.1 (6.8) |
| Spring Return | 3 | 9.4 (0.37) | 1.0 (0.04) | 51.6 (11.6) | 8.4 (0.33) | 4.1 (0.9) |
| | 4 | 14.0 (0.56) | 3.0 (0.12) | 109.0 (24.5) | 11.0 (0.43) | 8.7 (1.9) |
| | 5 | 15.6 (0.61) | 3.0 (0.12) | 203.0 (45.6) | 13.6 (0.49) | 16.2 (3.6) |
| | 6 | 17.9 (0.70) | 3.0 (0.12) | 310.0 (69.7) | 14.9 (0.48) | 24.8 (5.6) |
| Spring Assist | 3 | 9.40 (0.37) | 1.0 (0.04) | 92.6 (20.8) | 8.4 (0.33) | 7.4 (1.7) |
| | 4 | 14.0 (0.55) | 3.0 (0.12) | 205.0 (46.1) | 11.0 (0.43) | 16.4 (3.7) |
| | 5 | 15.6 (0.61) | 3.0 (0.12) | 315.0 (70.8) | 13.6 (0.49) | 25.2 (5.7) |
| | 6 | 17.9 (0.70) | 3.0 (0.12) | 471.4 (105.9) | 14.9 (0.58) | 37.7 (8.5) |

* Grip force (F/2) given in N (lbf) at 5 bar (72.5 psi)

## Spring Return Options (A, B, C)

The spring return option allows for an automatic reset and jaw return. Selecting the spring return option creates a single-acting gripper component that reduces the number or type of directional control valves needed.

***NOTE:*** *The spring return option does not change the dimensions of the gripper.*



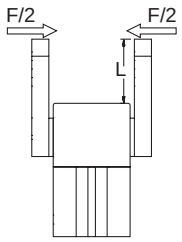


### Maximum Total Grip Forces

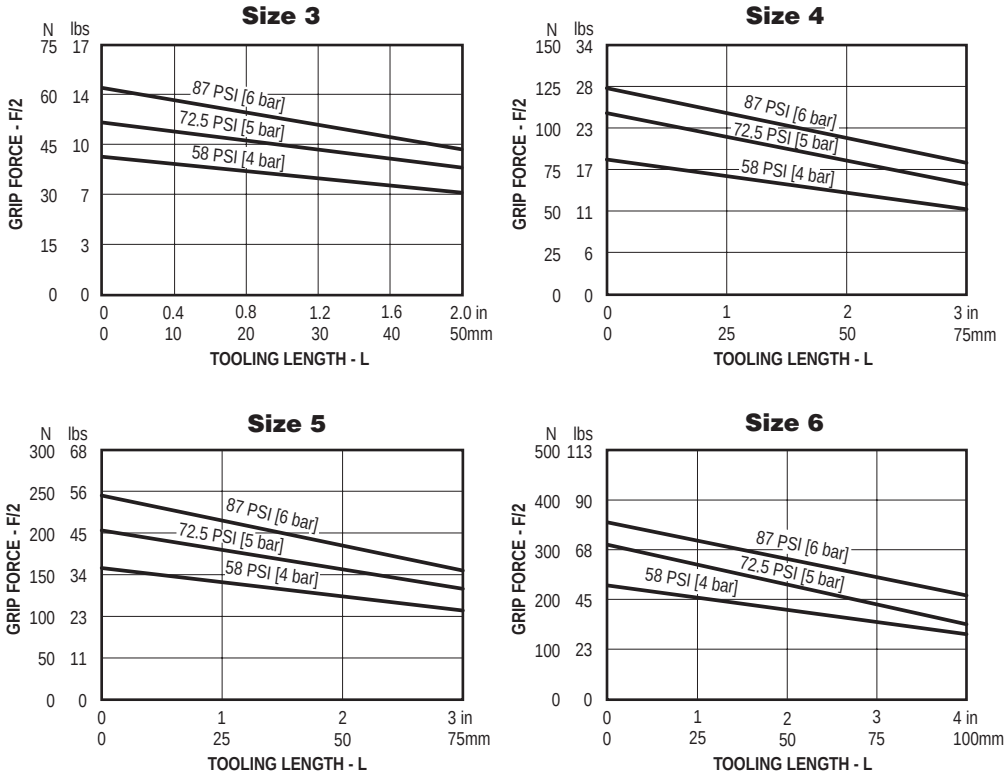


## Specifications

| Size | Grip Force (F/2) with No Air Pressure, N (lbf) | Minimum Air Pressure to Overcome Spring Force Bar (PSI) | Cylinder Volume (Full Bore Side), $mm^3$ ($in^3$) | Unit Weight, N (lbf) Standard Travel | Unit Weight, N (lbf) Extended Travel |
|---|---|---|---|---|---|
| P5G-AP3 | 6.1 (1.4) | 0.7 (10) | 3286 (0.20) | 1.4 (0.32) | 1.5 (0.34) |
| P5G-AP4 | 10.8 (2.5) | 0.5 (7) | 4891 (0.30) | 2.3 (0.53) | 2.7 (0.62) |
| P5G-AP5 | 12.6 (2.8) | 0.3 (5) | 5940 (0.58) | 3.6 (0.82 | 3.8 (0.87) |
| P5G-AP6 | 18.0 (4.0) | 0.3 (4.5) | 15003 (0.92) | 5.2 (1.19) | 5.5 (1.25) |

## Spring Assist Options (D, E)

The spring assist option offers extra gripping force and works as a fail-safe mode during a power failure. Spring assist is available with grip open or grip close.

***NOTE:*** *Not available with the stroke adjust rear option. Spring assist wil increase main body length.*

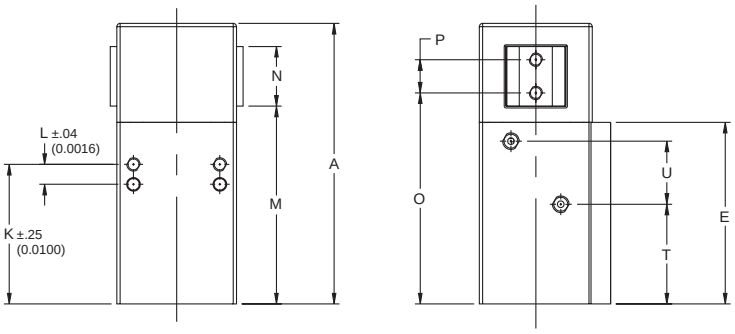


### Dimensions (mm)

| Size | A | E | K | L | M | N | O | P | T | U |
|---|---|---|---|---|---|---|---|---|---|---|
| 3 | 67 | 44.7 | 32.5 | 5.5 | 48.5 | 13.0 | 51.5 | 7 | 23 | 14.5 |
| 4 | 84.5 | 54.7 | 42 | 6 | 59.5 | 18.0 | 63.5 | 10 | 30 | 19 |
| 5 | 86.5 | 54 | 41 | 6 | 59.5 | 20.0 | 64.0 | 11 | 28 | 20 |
| 6 | 97 | 60.2 | 46 | 8 | 66 | 22 | 71 | 12 | 33 | 22 |

## Maximum Grip Forces

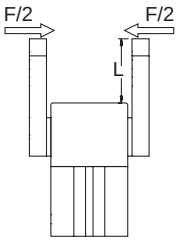


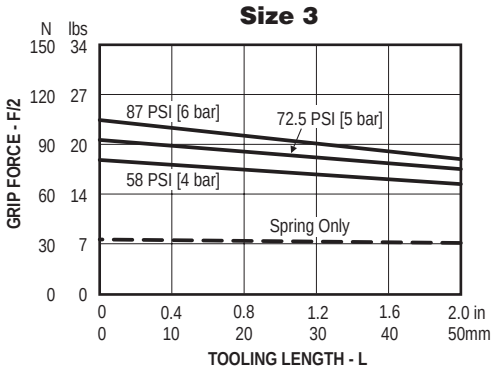


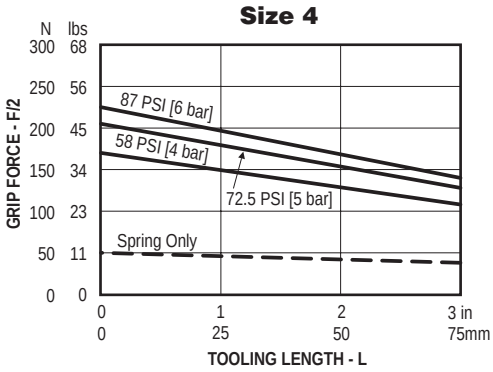


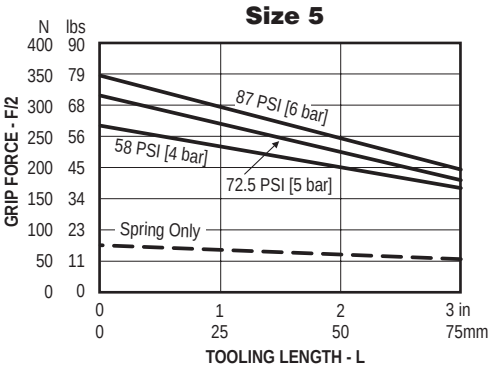


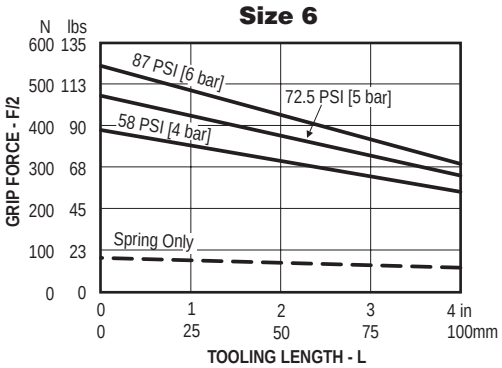


## Specifications

| Size | Minimum Air Pressure to Overcome Spring Force Bar (PSI) | Cylinder Volume Full Bore Side, $mm^3$ ($in^3$) | Cylider Volume Rod Side, $mm^3$ ($in^3$) | Unit Weight, N (lbf) Standard Travel | Unit Weight, N (lbf) Extended Travel |
|---|---|---|---|---|---|
| 3 | 4.6 (67) | 3769 (0.23) | 1020 (0.06) | 1.5 (0.34) | 1.6 (0.37) |
| 4 | 3.7 (56) | 13875 (0.85) | 3523 (0.21) | 3.2 (0.73) | 3.6 (0.82) |
| 5 | 3.7 (56) | 23147 (1.41) | 6060 (0.37) | 4.6 (1.05) | 4.9 (1.12) |
| 6 | 3.0 (43) | 41242 (2.52) | 11758 (0.72) | 6.8 (1.55) | 7.1 (1.62) |



**Parker Hannifin Corporation**
Actuator Division
Wadsworth, Ohio USA

## Stroke Adjust (A, B, D, F, G)

Use the stroke adjust option when you need exact travel distances. Fully adjustable internal stops permit precise stopping locations anywhere within the jaw travel. The stroke adjust option is available in two configurations:

- Stroke adjust front
- Stroke adjust rear

This gives the machine designer the flexibility to create the best possible design within limited space requirements.

### Stroke Adjust Front

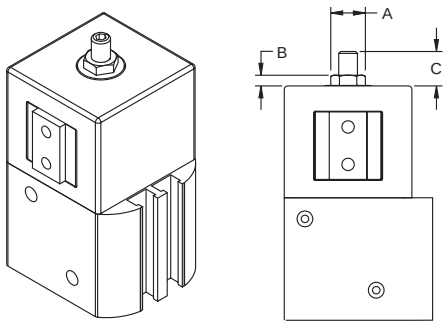


### Stroke Adjust Rear

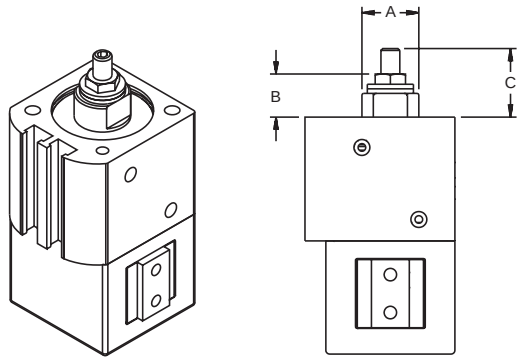


### Dimensions (mm)

| Size | A | B | C |
|---|---|---|---|
| 3 | 8 | 3 | 7 |
| 4 | 9.5 | 3 | 11 |
| 5 | 9.5 | 3 | 11 |
| 6 | 9.5 | 3 | 12 |

### Dimensions (mm)

| Size | A | B | C |
|---|---|---|---|
| 3 | 10.5 | 10 | 14.5 |
| 4 | 15 | 11.5 | 19 |
| 5 | 20 | 14 | 21.5 |
| 6 | 24 | 12.5 | 21.5 |

NOTES:
**Stroke adjust rear not available with spring return on Size 3.**
**Stroke adjust rear is not available with spring assist.**

## Adjustment Tools

| | Socket Stroke Adjuster | | Nut | |
|---|---|---|---|---|
| Size | Size | Wrench | Size | Wrench |
| 3 | M4 | 2 mm | M4 | 7 mm |
| 4 | M5 | 2.5 mm | M5 | 8 mm |
| 5 | M5 | 2.5 mm | M5 | 8 mm |
| 6 | M5 | 2.5 mm | M5 | 8 mm |





**Parker Hannifin Corporation**
Actuator Division
Wadsworth, Ohio USA

## Proximity Sensors
## Prox Ready (PJ)

Proximity sensors provide feedback on the position of the gripper fingers by sensing the metal screw that is attached to the gripper jaw. The sensor is adjustable along the full travel of the steel screw and is held in place by the set screw.

Care should be taken when adjusting the sensor so that the adjustable screw does not physically contact the sensor. Distance from the screw to the sensor should be approximately 1 mm (0.04 inches).

| Size | A | B |
|---|---|---|
| 3 | 15 (0.59) | 4.5 (0.18) |
| 4 | 18 (0.71) | 5.0 (0.20) |
| 5 | 20 (0.79) | 5.5 (0.22) |
| 6 | 22 (0.87) | 6.0 (0.27) |

**All dimensions in mm (inches)**

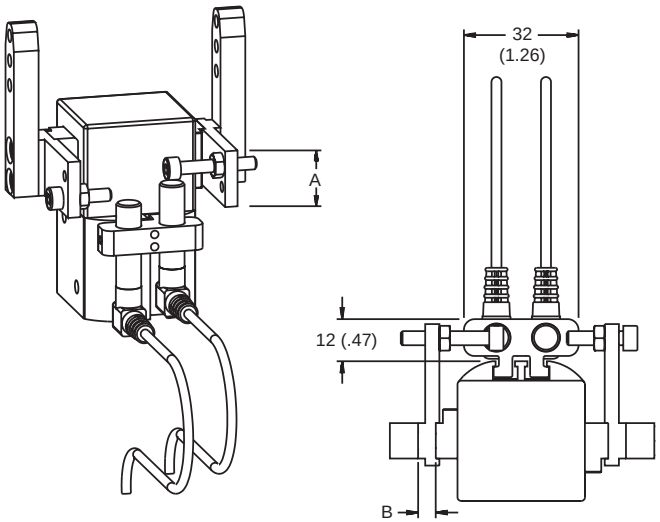


## Reed and Hall Effect Sensors

Reed or Hall effect sensors mount in the sensor mounting grooves located in the gripper body. A magnetic piston is standard for ease of field addition of sensors.

See Sensors section for specifications.

**Standard Sensors**

Standard sensors mount flush to the body. Sensor shown with connector. Lead wires also available.

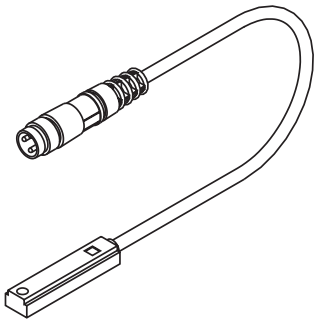

**Short Sensors**

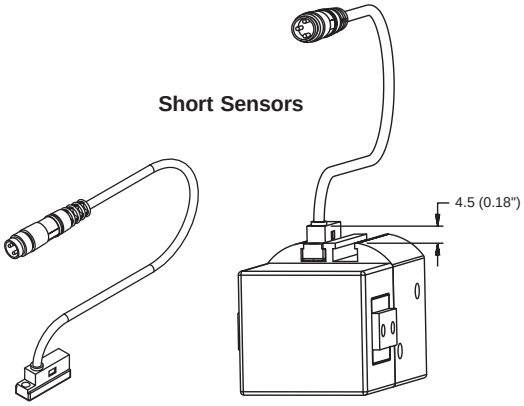


## Fluorocarbon Seals (V)

Standard abrasion resistant nitrile seals should be used for general purpose applications with temperatures of -18° to 82°C (0° to 180°F). Fluorocarbon seals are recommended for high temperature applications up to 121°C (250°F). The items shown in the table should be considered when planning high temperature applications.

| | Temperature Range |
|---|---|
| Magnets | -27° to 130°C (-16° to 266°F) |
| Bumpers | -27° to 90°C (-16° to 195°F) |
| Sensors | -25° to 75°C (-13° to 167°F) |
| Proximity Sensors | -25° to 70°C (-13° to 158°F) |

## Model Code and Ordering Information

| P5G | – | A | P | 4 | B | A | N | HB | S | – | A |
|---|---|---|---|---|---|---|---|---|---|---|---|

**Global Pneumatic Grippers**

P5G

**Series**

A – Automation

**Type**

P – Parallel

**Size**

3 – 16 mm
4 – 25 mm
5 – 32 mm
6 – 40 mm

**Ports**

B – M5 Female
3 – Prestolok Flow Control 4mm (5/32”) tube diameter

**Function**

A – Standard Travel, Maximum Grip Close
B – Standard Travel, Maximum Grip Open
C – Extended Travel, Maximum Grip Close
D – Extended Travel, Maximum Grip Open

**Spring/Stroke Adjust Options**

A – Spring Return, Stroke Adjust Front
B – Spring Return, Stroke Adjust Rear (Not available on Size 3)
C – Spring Return
D – Spring Assist, Stroke Adjust Front
E – Spring Assist
F – No Spring, Stroke Adjust Front
G – No Spring, Stroke Adjust Rear
N – No Option (Standard)

**Sensors**

NN – No Sensors
PJ – Proximity Sensor Ready

**Standard Hall Effect**
HA – (2) NPN w/Plug*
HB – (2) PNP w/Plug*
HC – (1) NPN w/Plug*
HD – (1) PNP w/Plug*
HE – (2) NPN w/o Plug**
HF – (2) PNP w/o Plug**
HG – (1) NPN w/o Plug**
HK – (1) PNP w/o Plug**

**Short Hall Effect**
HV – (2) PNP w/Plug*
HY – (1) PNP w/Plug*
KB – (2) PNP w/o Plug**
KD – (1) PNP w/o Plug**

**Standard Reed**
RA – (2) w/Plug*
RB – (1) w/Plug*
RC – (2) w/o Plug**
RD – (1) w/o Plug**

**Proximity**
PA – (2) NPN Plug-in †
PB – (2) PNP Plug-in †
PC – (1) NPN Plug-in †
PD – (1) PNP Plug-in †
PE – (2) NPN Potted ‡
PF – (2) PNP Potted ‡
PG – (1) NPN Potted ‡
PK – (1) PNP Potted ‡

* 0.27m cable
** 3m cable

† 5m cable
‡ 6m lead

**Seals**

S – Standard
F – Fluorocarbon

**Design Series**

A – Current Design Series

**See next page for Seal Kits.**





**Parker Hannifin Corporation**
Actuator Division
Wadsworth, Ohio USA

## Seal Kits

| Size | Nitrile Seal Kit | Fluorocarbon Seal Kit |
|---|---|---|
| P5G-AP3 | PSK-P5GAP3 | PSK-P5GAP3-F |
| P5G-AP4 | PSK-P5GAP4 | PSK-P5GAP4-F |
| P5G-AP5 | PSK-P5GAP5 | PSK-P5GAP5-F |
| P5G-AP6 | PSK-P5GAP6 | PSK-P5GAP6-F |

## Features

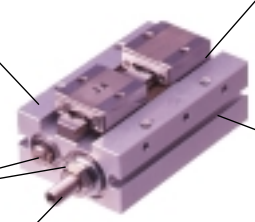

**Body**
One piece anodized aluminum body

**Square Rail Bearing**
Square rail bearing design provides high load capacities while providing precise motion.

**Double Piston Design**
Double piston design allows for low profile housing.

**Sensors**
Sensor grooves allow for easy installation, adjustment of Hall effect sensor. Magnetic piston standard.

**Stroke Adjustment**

**Dowel Pin Holes**
Slip fit dowels located in gripper body.

**Seals**
Self lubricating dynamic seals (Nitrile only)



## Operation

Operating Characteristic ..... Double acting, double piston

Gripping Force @ 100 PSI ..... 46 - 120 N (10 - 27 lbs)

Stroke Range ..... 16-22 mm

Operating Pressure Range ..... 30 - 100 PSI (2 - 7 bar)

### Not Recommended for Applications Containing:

- Dirt or grit
- Maching chips
- Environments with loose particulate
- Mechanism lubricant that could cause contamination

## Mounting

Gripper can be mounted on three faces and locates with dowel pin holes for accuracy.

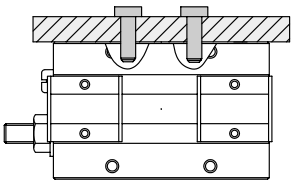

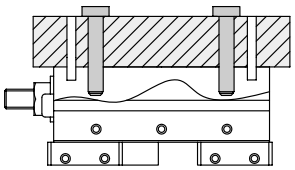

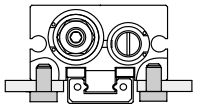

**Warning!** Protect drive and bearing mechanism from falling debris when mounted with fingers up.

## Contents

GPEL-8 ..... 58
GPEL-12 ..... 59
Stroke Adjust Option ..... 60
Proximity Sensors ..... 60
Ordering Information ..... 60



**Parker Hannifin Corporation**
Actuator Division
Wadsworth, Ohio USA

# GPEL-8JA

| | | |
|---|---|---|
| Total Grip Force (100 psi @ 1 in) | 10.34 lbs | 46 N |
| Stroke | 0.63 in | 16 mm |
| Weight | 0.19 lbs | 0.085 kg |
| Bore Size | 0.315 in | 8 mm |
| Cylinder Volume | 5.22 $in^3$ | 85.6 $cm^3$ |
| Repeatability | ± 0.0005 in | ± 0.01 mm |
| Temperature Range | 32° to 140° F | 0° to 60° C |
| Pressure Range | 30-100 psi | 2-7 bar |
| Filtration Requirement | 40 micron (dry air) | |

***Note: See model code and ordering information page for complete part number selection.***

## Loading Information

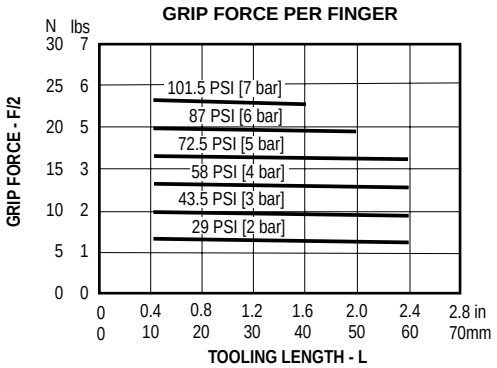


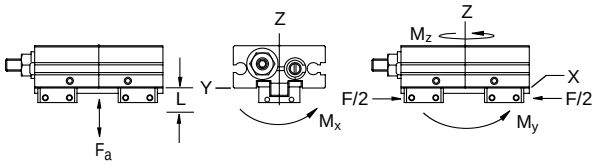


### Maximum Loading Capacity

| Load | Static | |
|---|---|---|
| Axial Forces (Fa) | 9 lbs | 40 N |
| Moment (Ma) | 2.7 in-lbs | 0.3 Nm |
| Moment (Mb) | 2.7 in-lbs | 0.3 Nm |
| Moment (Mc) | 4.4 in-lbs | 0.5 Nm |

## Dimensional Information

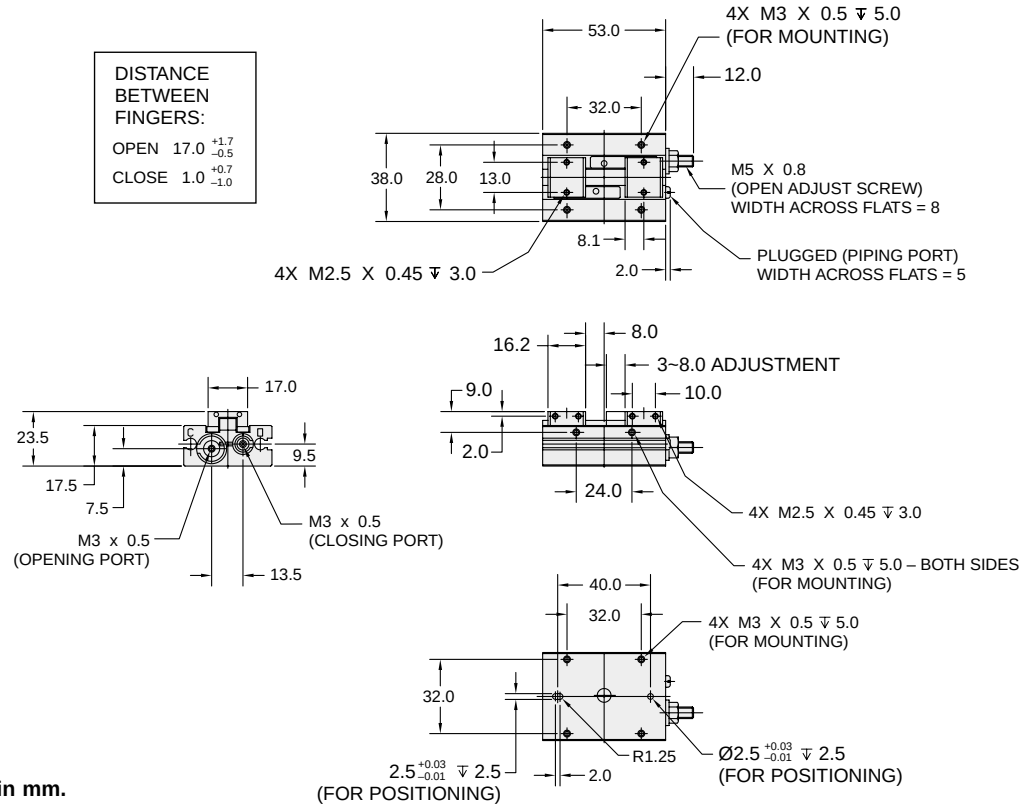


**Dimensions in mm.**



**Parker Hannifin Corporation**
Actuator Division
Wadsworth, Ohio USA

# GPEL-12JA

| | | |
|---|---|---|
| Total Grip Force (100 psi @ 1 in) | 26.9 lbs | 120 N |
| Stroke | 0.87 in | 22 mm |
| Weight | 0.21 lbs | 0.195 kg |
| Bore Size | 0.472 in | 12 mm |
| Cylinder Volume | 13.82 $in^3$ | 226.6 $cm^3$ |
| Repeatability | ± 0.0004 in | ± 0.01 mm |
| Temperature Range | 32° to 140° F | 0° to 60° C |
| Pressure Range | 22-100 psi | 1.5-7 bar |
| Filtration Requirement | 40 micron (dry air) | |

***Note: See model code and ordering information page for complete part number selection.***

## Loading Information

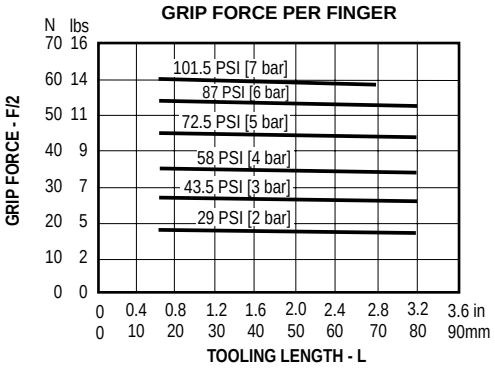


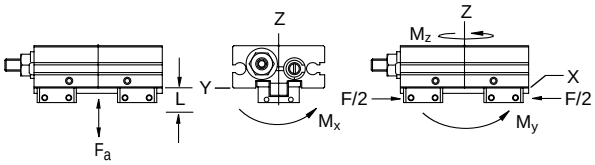


### Maximum Loading Capacity

| Loading Capacity | Static | |
|---|---|---|
| Axial Forces ($F_a$) | 27 lbs | 120 N |
| Moment (Ma) | 8.8 in-lbs | 1.0 Nm |
| Moment (Mb) | 8.8 in-lbs | 1.0 Nm |
| Moment (Mc) | 17.7 in-lbs | 2.0 Nm |

## Dimensional Information

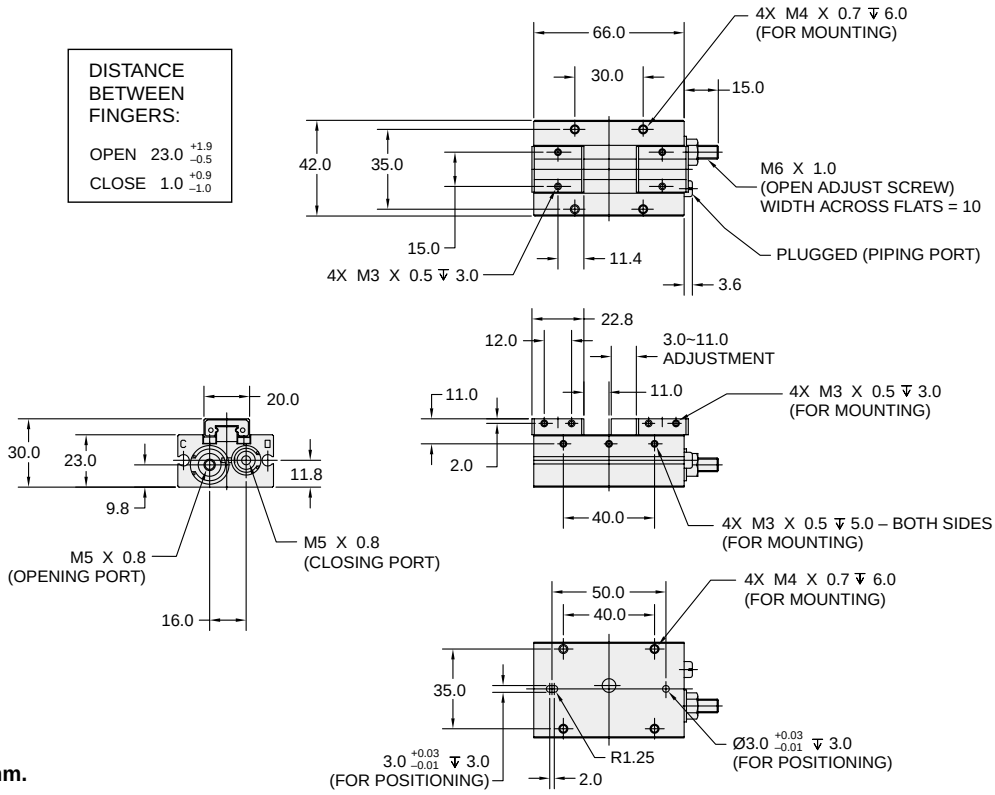


**Dimensions in mm.**





**Parker Hannifin Corporation**
Actuator Division
Wadsworth, Ohio USA

## Stroke Adjust (JA, JB)

Stroke adjusters are a standard option and available in a stroke adjust open or stroke adjust close configuration.

Adjusting the stroke adjuster will reduce/increase the travel of the "adjusting finger" only. See figure for adjusting finger designation.

| Model | Adjustment Range (A) |
|---|---|
| GPEL-8 | 3~8 mm |
| GPEL-12 | 3~11 mm |

Option JA

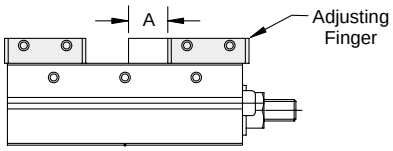


Option JB

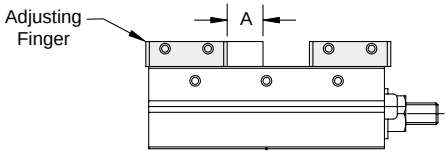


## Magnetic Piston (Standard)

The GPEL Series grippers include a standard magnetic piston to sense piston position. Hall effect switches can be ordered and mounted in the sensor mounting groove located in the gripper body.

See Sensor section for sensor part numbers and specifications.

## Model Code and Ordering Information

GPEL – 12 JA

**Series**

GPEL – Compact

**Size**

8 – 8mm Bore, 16mm Stroke

12 – 12mm Bore, 22mm Stroke

**Stroke Adjustment**

JA – Double Acting with Stroke Adjust Open

JB – Double Acting with Stroke Adjust Close

## Seal Kits

| Size | Nitrile Seal Kit |
|---|---|
| GPEL-8 | PSK-GPEL-8 |
| GPEL-12 | PSK-GPEL-12 |



**Parker Hannifin Corporation**
Actuator Division
Wadsworth, Ohio USA

## Features

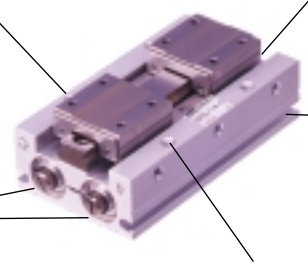

**Square Rail Bearing**
Square rail bearing design provides high load capacities while providing precise motion.

**Body**
One piece anodized aluminum body

**Seals**
Self lubricating dynamic seals (Nitrile only)

**Sensors**
Sensor grooves allow for easy installation, adjustment of Hall effect sensor. Magnetic piston standard.

**Double Piston Design**
Double piston design allows for low profile housing.

**Mounting**
Standard mounting on three faces.

**Travel Options**
Available in either a short stroke or long stroke configuration.

**Dowel Pin Holes**
Press fit dowels located in gripper body.

## Operation

Operating Characteristic ..... Double acting, double piston

Gripping Force @ 100 PSI ..... 46 - 287 N (10 - 65 lbs)

Stroke Range ..... 16-80mm

Operating Pressure Range ..... 30 - 100 PSI (2 - 7 bar)

### Not Recommended for Applications Containing:

- Dirt or grit
- Maching chips
- Environments with loose particulate
- Mechanism lubricant that could cause contamination

## Mounting

Gripper can be mounted on three faces and locates with dowel pin holes for accuracy.

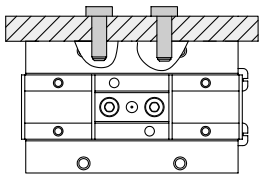

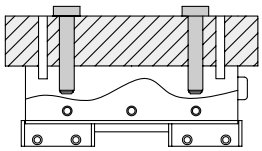

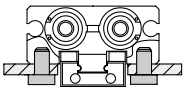

**Warning!** Protect drive and bearing mechanism from falling debris when mounted with fingers up.

## Contents

GPDL-8 ..... 62
GPDL-12 ..... 63
GPDL-14S ..... 64
GPDL-18S ..... 65
Stroke Adjust Option ..... 66
Long Stroke Option ..... 66
Proximity Sensors ..... 66
Ordering Information ..... 67





**Parker Hannifin Corporation**
Actuator Division
Wadsworth, Ohio USA

# GPDL-8

| | | |
|---|---|---|
| Total Grip Force (100 psi @ 1 in) | 10.34 lbs | 46 N |
| Stroke | 0.63 in | 16 mm |
| Weight | 0.163 lbs | 0.074 kg |
| Bore Size | 0.315 in | 8 mm |
| Cylinder Volume | 3.21 $in^3$ | 52.6 $cm^3$ |
| Repeatability | ± 0.0004 in | ± 0.01 mm |
| Temperature Range | 41° to 140° F | 5° to 60° C |
| Pressure Range | 30-100 psi | 2-7 bar |
| Filtration Requirement | 40 micron (dry air) | |

***Note: See model code and ordering information page for complete part number selection.***

## Loading Information

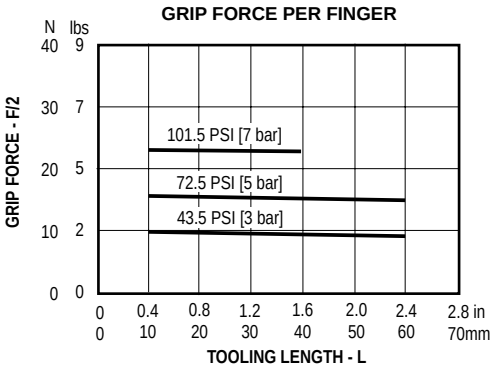


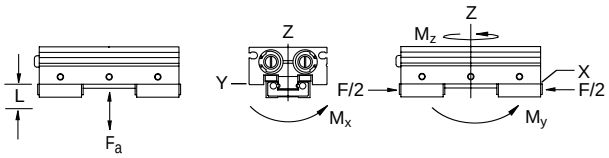


### Maximum Loading Capacity

| Load | Static | |
|---|---|---|
| Axial Forces (Fa) | 9 lbs | 40 N |
| Moment (Mx) | 2.7 in-lbs | 0.3 Nm |
| Moment (My) | 2.7 in-lbs | 0.3 Nm |
| Moment (Mz) | 4.4 in-lbs | 0.5 Nm |

## Dimensional Information

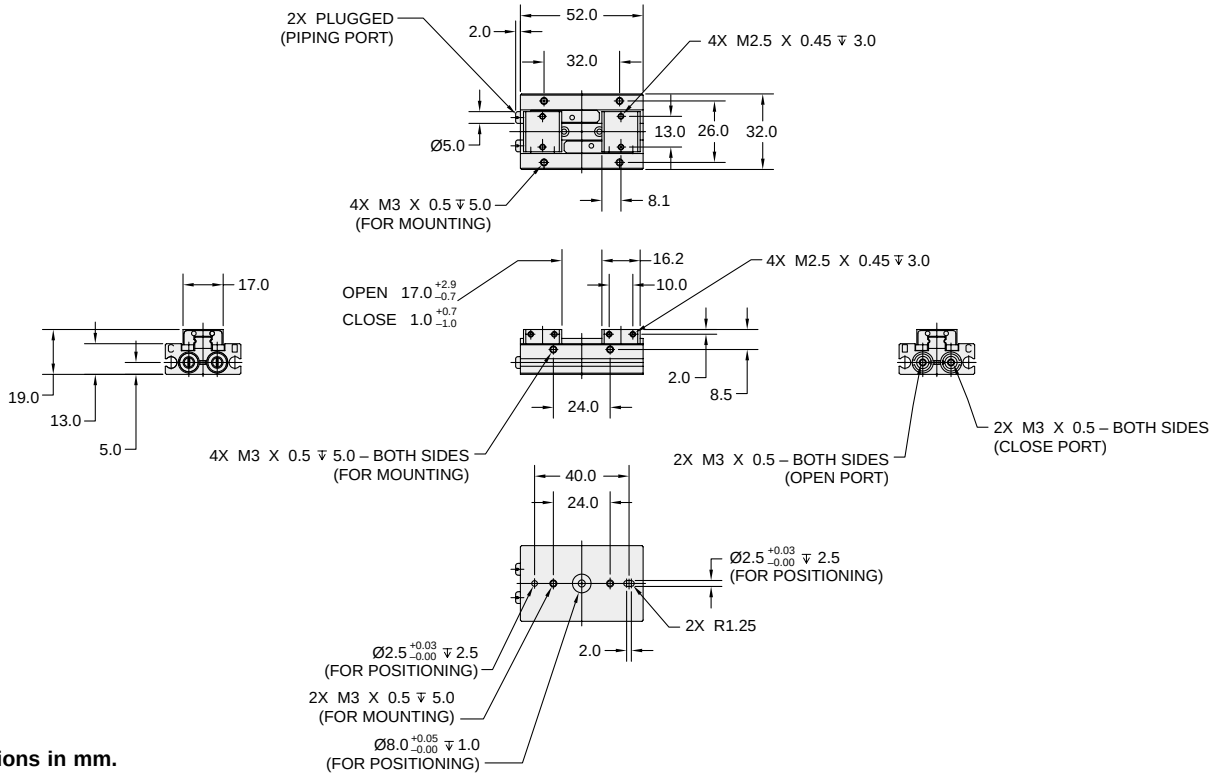


**Dimensions in mm.**



**Parker Hannifin Corporation**
Actuator Division
Wadsworth, Ohio USA

# GPDL-12

| | | |
|---|---|---|
| Total Grip Force (100 psi @ 1 in) | 26.5 lbs | 118 N |
| Stroke | 0.86 in | 22 mm |
| Weight | 0.4 lbs | 0.183 kg |
| Bore Size | 0.472 in | 12 mm |
| Cylinder Volume | 9.95 $in^3$ | 162 $cm^3$ |
| Repeatability | ± 0.0005 in | ± 0.01 mm |
| Temperature Range | 41° to 140° F | 5° to 60° C |
| Pressure Range | 22-100 psi | 1.5-7 bar |
| Filtration Requirement | 40 micron (dry air) | |

***Note: See model code and ordering information page for complete part number selection.***

## Loading Information

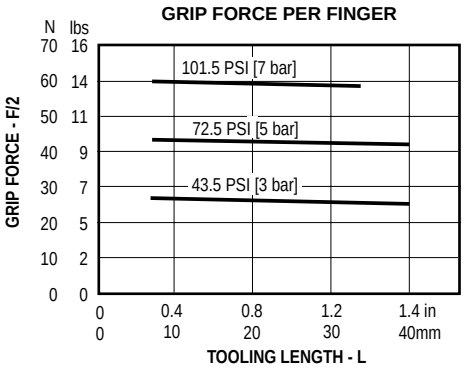


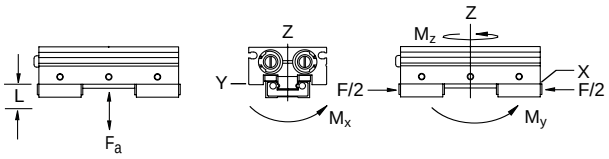


### Maximum Loading Capacity

| Load | Static | |
|---|---|---|
| Axial Forces (Fa) | 27 lbs | 120 N |
| Moment (Mx) | 8.8 in-lbs | 1.0 Nm |
| Moment (My) | 8.8 in-lbs | 1.0 Nm |
| Moment (Mz) | 17.7 in-lbs | 2.0 Nm |

## Dimensional Information

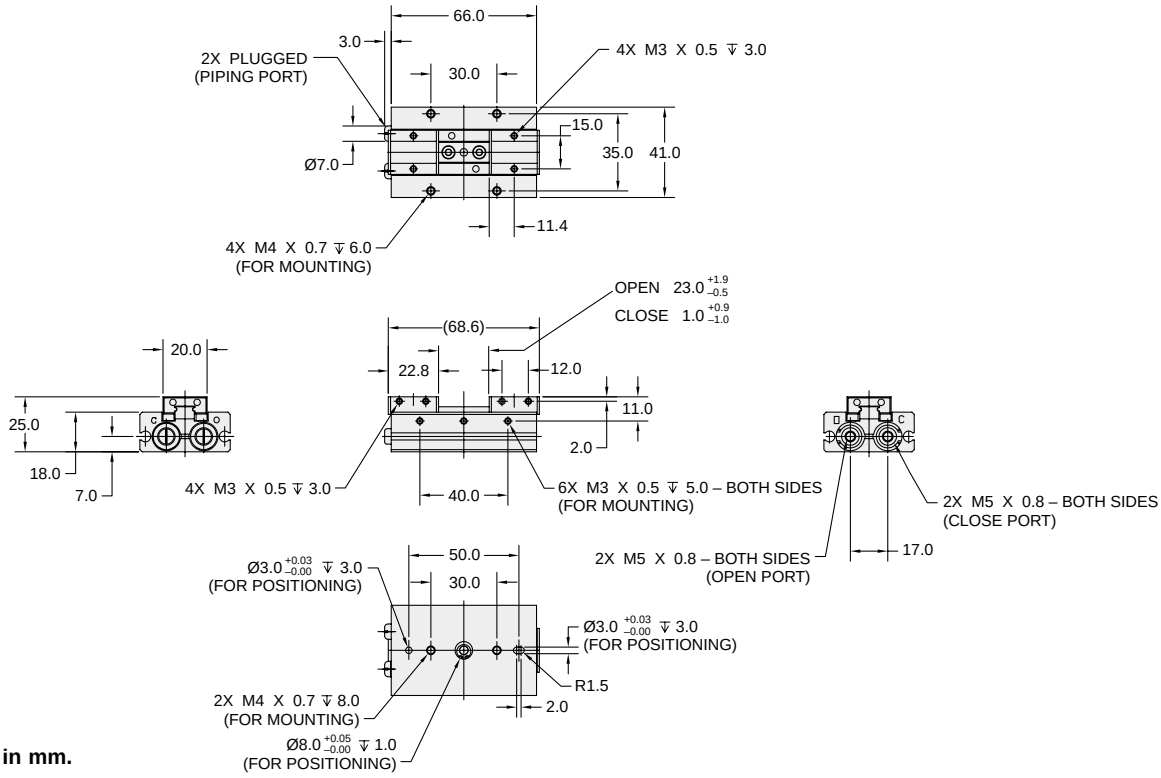


**Dimensions in mm.**





**Parker Hannifin Corporation**
Actuator Division
Wadsworth, Ohio USA

## GPDL-14-S

| | | |
|---|---|---|
| Total Grip Force (100 psi @ 1 in) | 36.8 lbs | 164 N |
| Stroke (S=short; L=long) | S: 1.18 in<br>L: 2.36 in | S: 30 mm<br>L: 60 mm |
| Weight (S=short; L=long) | S: 0.95 lbs<br>L: 1.26 lbs | S: 0.43 kg<br>L: 0.57 kg |
| Bore Size | 0.551 in | 14 mm |
| Cylinder Volume | 36.93 $in^3$ | 605.4 $cm^3$ |
| Repeatability | ± 0.0004 in | ± 0.01mm |
| Temperature Range | 41° to 140° F | 5° to 60° C |
| Pressure Range | 22-100 psi | 1.5-7 bar |
| Filtration Requirement | 40 micron (dry air) | |

***Note: See model code and ordering information page for complete part number selection.***

## Loading Information

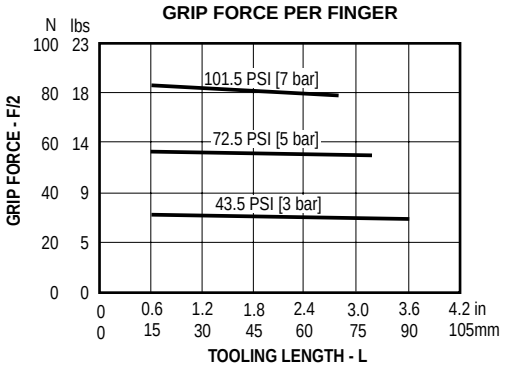


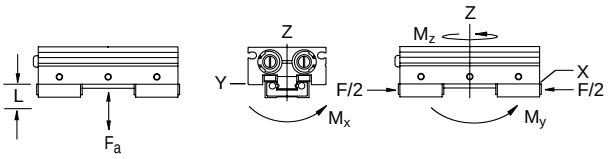


### Maximum Loading Capacity

| Load | Static | |
|---|---|---|
| Axial Forces (Fa) | 42.7 lbs | 190 N |
| Moment (Mx) | 30.1 in-lbs | 3.4 Nm |
| Moment (My) | 35.4 in-lbs | 4.0 Nm |
| Moment (Mz) | 70.8 in-lbs | 8.0 Nm |

## Dimensional Information

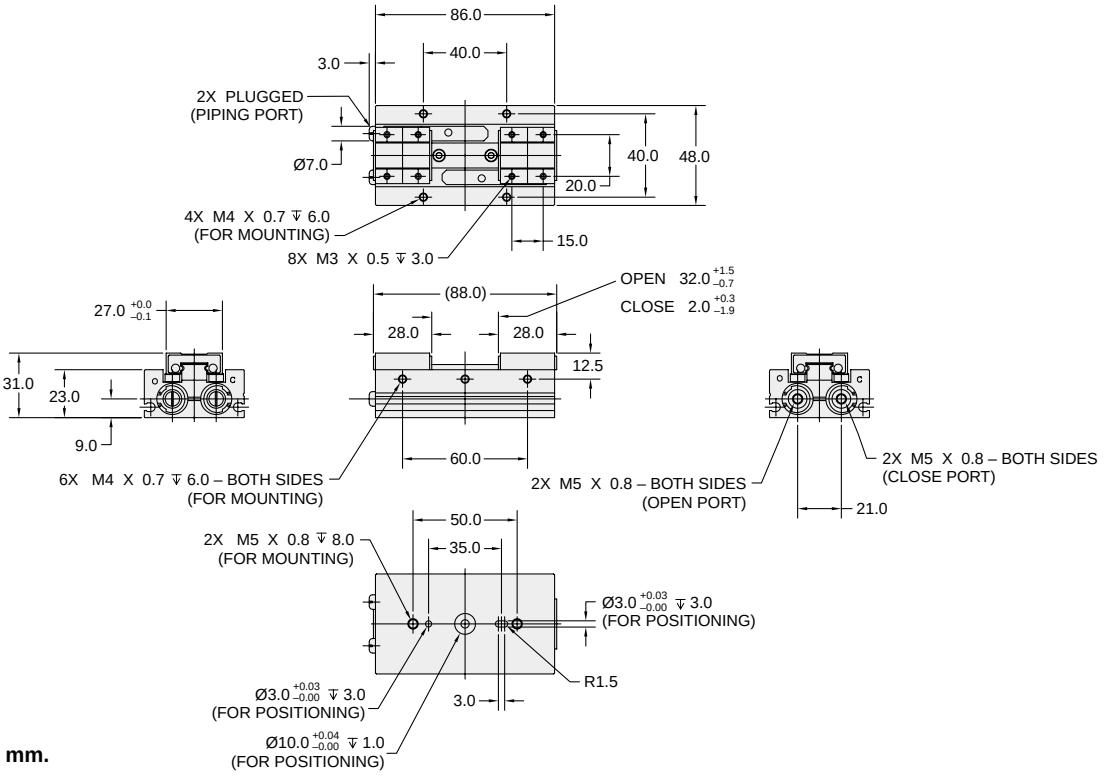


**Dimensions in mm.**



**Parker Hannifin Corporation**
Actuator Division
Wadsworth, Ohio USA

# GPDL-18-S

| | | |
|---|---|---|
| Total Grip Force (100 psi @ 1 in) | 64.5 lbs | 287 N |
| Stroke<br>(S=short; L=long) | S: 1.57 in<br>L: 3.15 in | S: 40 mm<br>L: 80 mm |
| Weight<br>(S=short; L=long) | S: 1.41 lbs<br>L: 2.07 lbs | S: 0.64 kg<br>L: 0.94 kg |
| Bore Size | 0.709 in | 18 mm |
| Cylinder Volume | 80.39 in3 | 402 |
| Repeatability | ± 0.0004 in | ± 0.01 mm |
| Temperature Range | 41° to 140° F | 5° to 60° C |
| Pressure Range | 22-100 psi | 1.5-7 bar |
| Filtration Requirement | 40 micron (dry air) | |

***Note: See model code and ordering information page for complete part number selection.***

## Loading Information

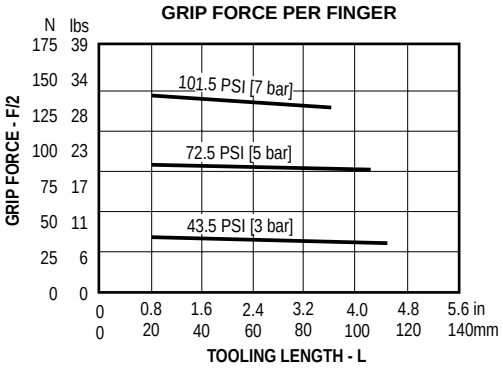


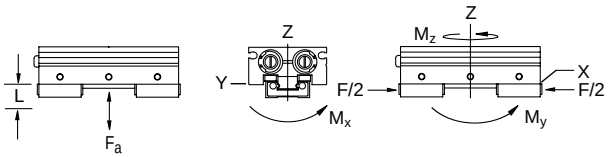


### Maximum Loading Capacity

| Load | Static | |
|---|---|---|
| Axial Forces (Fa) | 47.2 lbs | 210 N |
| Moment (Mx) | 38.9 in-lbs | 4.4 Nm |
| Moment (My) | 47.8 in-lbs | 5.4 Nm |
| Moment (Mz) | 79.6 in-lbs | 9.0 Nm |

## Dimensional Information

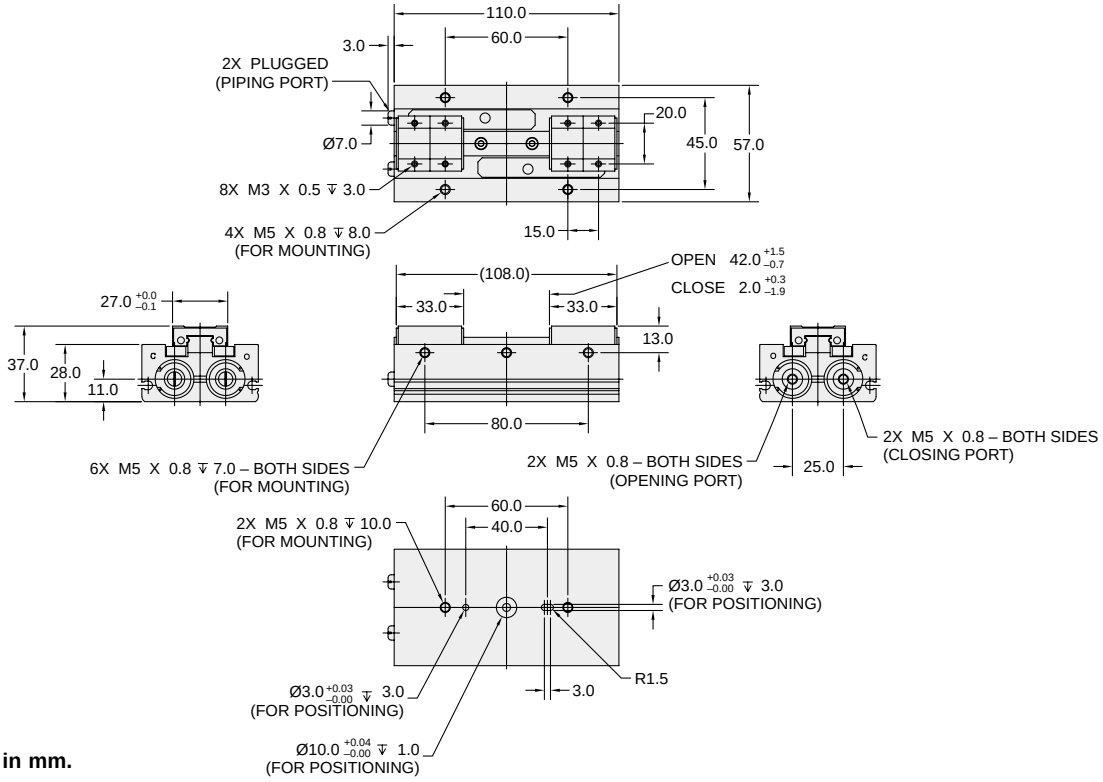


**Dimensions in mm.**





**Parker Hannifin Corporation**
Actuator Division
Wadsworth, Ohio USA

## Stroke Adjusters (JA, JB, JC)

Use the stroke adjuster option when precise end-of-stroke jaw positioning is needed. Fully adjustable internal stops permit precise stopping locations anywhere within the jaw travel. The stroke adjuster option is available in three configurations:

- Stroke adjust open
- Stroke adjust close
- Stroke adjust both directions

This gives the machine designer the flexibility to create the best possible design within limited space requirements.

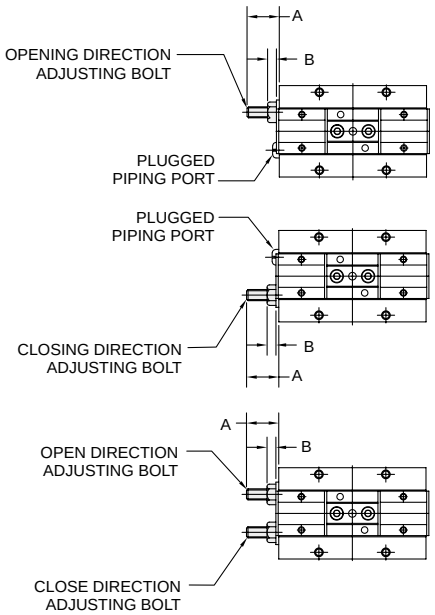


### Dimensions (mm)

| Size | A | B | Adjusting Bolt |
|---|---|---|---|
| 8 | 9 | 2.4 | M3 x 0.5 |
| 12 | 14.5 | 4.0 | M5 x 0.8 |
| 14 | 14.6 | 5.0 | M6 x 1 |
| 18 | 14.1 | 5.0 | M8 x 1.25 |

## Travel Options (S, L)

The short stroke configuration (S) and long stroke configuration (L) are available on size 14 and 18 grippers only. Short stroke dimensions are shown on the individual model pages. Dimensions are shown below for long stroke models.

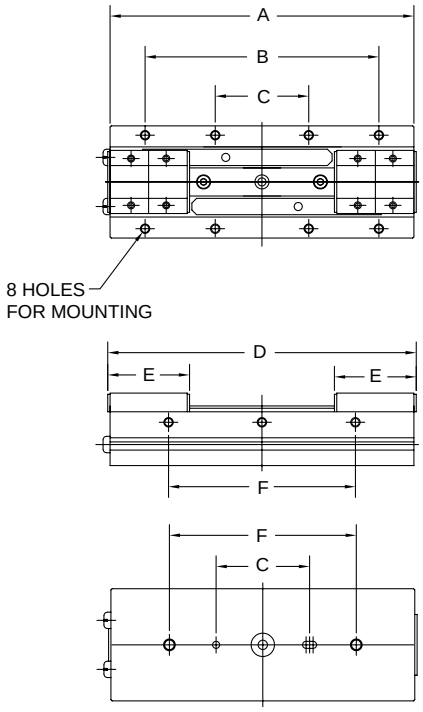


### Maximum Stroke

| Model | Short Stroke (mm) | Long Stroke (mm) |
|---|---|---|
| GPDL-14 | 30 | 60 |
| GPDL-18 | 40 | 80 |

### Long Stroke Dimensions (mm)

| Model | A | B | C | D | E | F |
|---|---|---|---|---|---|---|
| GPDL-14 | 130 | 100 | 40 | 132 | 35 | 80 |
| GPDL-18 | 166 | 100 | 40 | 168 | 43 | 120 |

## Magnetic Piston (Standard)

The GPDL Series grippers include a standard magnetic piston to sense piston position. Hall effect switches can be ordered and mounted in the sensor mounting groove located in the gripper body.

See Sensor section for sensor part numbers and specifications.

## Model Code and Ordering Information

GPDL – 14 JA – S

**Series**
GPDL

**Size**
8 – 8mm Bore
12 – 12mm Bore
14 – 14mm Bore
18 – 18mm Bore

**Stroke Adjustment**
Omit – No Stroke Adjustment (Standard)
JA – Stroke Adjust Open
JB – Stroke Adjust Close
JC – Stroke Adjust Open and Close

**Stroke**
Omit – Sizes 8 and 12 only.
S – Short Stroke (Sizes 14 and 18 only)
L – Long Stroke (Sizes 14 and 18 only)



## Seal Kits

| Size | Nitrile Seal Kit |
|---|---|
| GPDL-8 | PSK-GPDL-8 |
| GPDL-12 | PSK-GPDL-12 |
| GPDL-14 | PSK-GPDL-14 |
| GPDL-18 | PSK-GPDL-18 |

## Notes



**Parker Hannifin Corporation**
Actuator Division
Wadsworth, Ohio USA

## Features

**Body**
One piece hard coat anodized aluminum body with Teflon® impregnation

**Dowel Holes**
Slip fit dowels located in gripper body.

**Option:**
Non-synchronous operation

**Bearing Adjustment**
Preload adjustment screw allows for adjustment of the bearing preload maintaining maximum gripper performance.

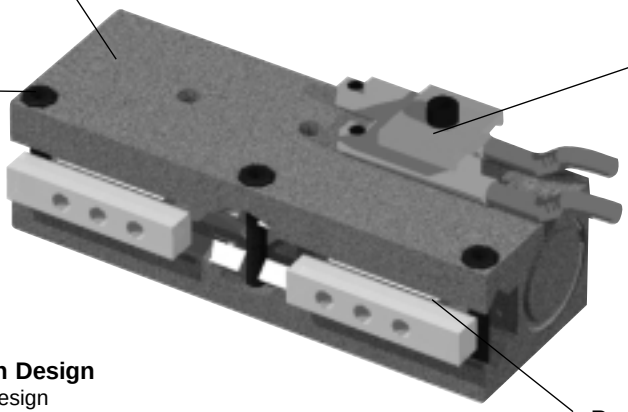

**Optional Hall Effect Sensors**
Read position of piston (Sold separately)

**Double Piston Design**
Double piston design provides maximum grip force to size ratio

**Preloaded Bearings**
Preloaded roller bearings provide maximum support and precise motion.

## Operation

Operating Characteristic ..... Double acting, double piston

Gripping Force @ 100 PSI ..... 25 - 33 lbs

Stroke Range ..... 1/4" to 1"

Operating Pressure Range ..... 5 - 100 PSI (0.3 - 7 bar)

### Clean Room Option

Available for dirty, harsh or clean room applications.

## Mounting

**WARNING!** Protect gripper internal mechanism from debris or contamination.

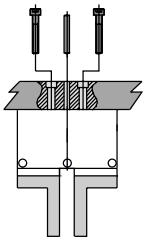

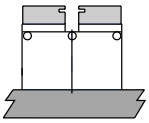

Gripper mounts using tapped holes and slip fit dowel pin holes.

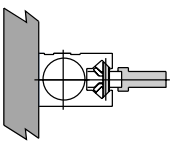

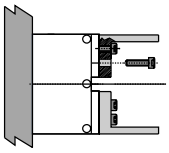

Custom finger tooling mounts using tapped holes and precise tolerancing of fingers.

## Contents

P5G-HPL-1 ..... 70
P5G-HPL-2 ..... 71
P5G-HPL-3 ..... 72
P5G-HPL4 ..... 73
Clean Room Option ..... 74
Metric Design Option ..... 74
Non-Synchronous Option ..... 74
Fluorocarbon Seals ..... 75
Proximity Sensors ..... 75
Ordering Information ..... 76





**Parker Hannifin Corporation**
Actuator Division
Wadsworth, Ohio USA

## P5G-HPL-1M-NS-V

| | | |
|---|---|---|
| Total Grip Force (100 psi @ 1 in) | 25 lbs | 111 N |
| Stroke | 0.25 in | 6.4 mm |
| Weight | 0.16 lbs | 0.07 kg |
| Bore Size | 7/16 in | 11.1 mm |
| Cylinder Volume | 0.038 $in^3$ | 0.6 $cm^3$ |
| Repeatability | ± 0.001 in | ± 0.03 mm |
| Temperature Range* | -30° to 180° F | -35° to 80° C |
| Pressure Range | 5-100 psi | 0.3-7 bar |
| Filtration Requirement | 40 micron (dry air) | |

* Fluorocarbon seals available for high temperature applications

***Note: See model code and ordering information page for complete part number selection.***

## Loading Information

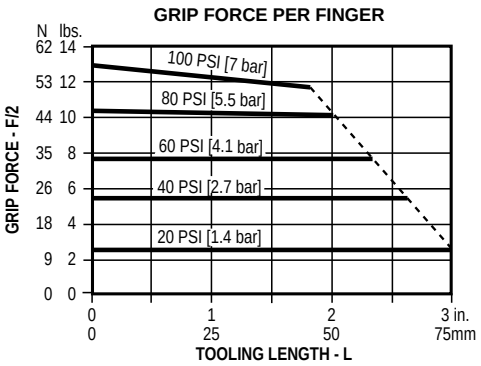


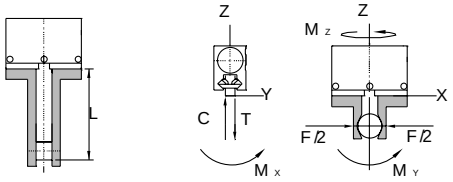


### Maximum Loading Capacity

| | Static | | Dynamic | |
|---|---|---|---|---|
| Axial Forces (C,T) | 50 lbs | 222.4 N | 15 lbs | 66.7 N |
| Moment (Mx) | 30 in-lbs | 3.4 Nm | 10 in-lbs | 1.1 Nm |
| Moment (My) | 40 in-lbs | 4.5 Nm | 12 in-lbs | 1.4 Nm |
| Moment (Mz) | 30 in-lbs | 3.4 Nm | 10 in-lbs | 1.1 Nm |

## Dimensional Information

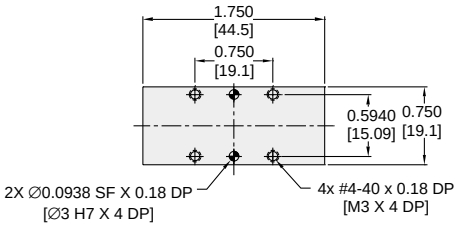


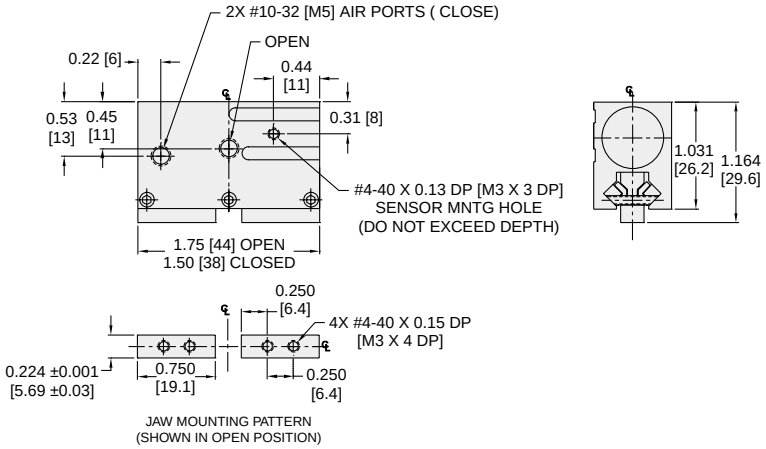


**Dimensions in inch (mm).**



**Parker Hannifin Corporation**
Actuator Division
Wadsworth, Ohio USA

## P5G-HPL-2M-NS-V

| | | |
|---|---|---|
| Total Grip Force (100 psi @ 1 in) | 25 lbs | 111 N |
| Stroke | 0.50 in | 12.7 mm |
| Weight | 0.20 lbs | 0.09 kg |
| Bore Size | 7/16 in | 11.1 mm |
| Cylinder Volume | 0.075 $in^3$ | 1.2 $cm^3$ |
| Repeatability | ± 0.001 in | ± 0.03 mm |
| Temperature Range* | -30° to 180° F | -35° to 80°C |
| Pressure Range | 5-100 psi | 0.3-7 bar |
| Filtration Requirement | 40 micron (dry air) | |

* Fluorocarbon seals available for high temperature applications

***Note: See model code and ordering information page for complete part number selection.***

## Loading Information

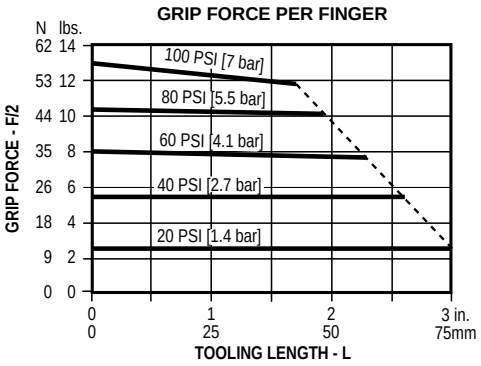


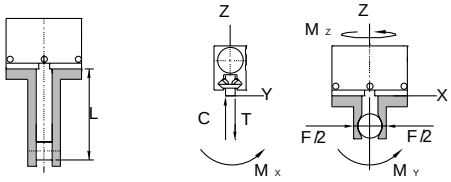


### Maximum Loading Capacity

| | Static | | Dynamic | |
|---|---|---|---|---|
| Axial Forces (C,T) | 65 lbs | 289.1 N | 20 lbs | 89.0 N |
| Moment (Mx) | 45 in-lbs | 5.1 Nm | 15 in-lbs | 1.7 Nm |
| Moment (My) | 60 in-lbs | 6.8 Nm | 20 in-lbs | 2.3 Nm |
| Moment (Mz) | 45 in-lbs | 5.1 Nm | 15 in-lbs | 1.7 Nm |

## Dimensional Information

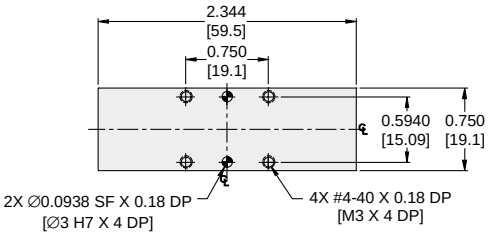


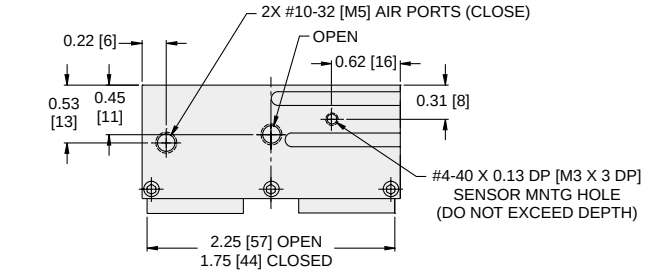


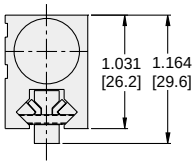


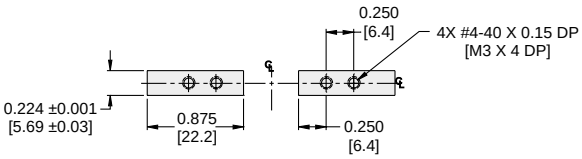


JAW MOUNTING PATTERN
(SHOWN IN OPEN POSITION)

**Dimensions in inch (mm).**





**Parker Hannifin Corporation**
Actuator Division
Wadsworth, Ohio USA

## P5G-HPL-3M-NS-V

| | | |
|---|---|---|
| Total Grip Force (100 psi @ 1 in) | 33 lbs | 146 N |
| Stroke | 0.75 in | 19.1 mm |
| Weight | 0.32 lbs | 0.15 kg |
| Bore Size | 0.5 in | 12.7 mm |
| Cylinder Volume | 0.147 $in^3$ | 2.4 $cm^3$ |
| Repeatability | ± 0.001 in | ± 0.03 mm |
| Temperature Range* | -30° to 180° F | -35° to 80° C |
| Pressure Range | 5-100 psi | 0.3-7 bar |
| Filtration Requirement | 40 micron (dry air) | |

* Fluorocarbon seals available for high temperature applications

***Note: See model code and ordering information page for complete part number selection.***

## Loading Information

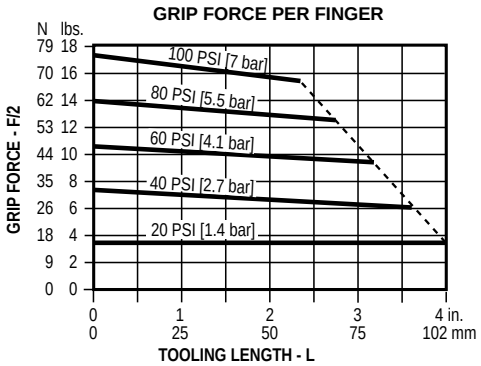


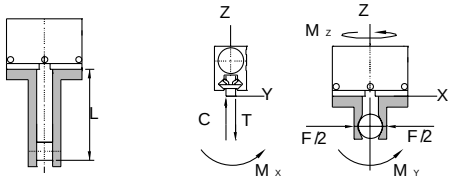


### Maximum Loading Capacity

| | Static | | Dynamic | |
|---|---|---|---|---|
| Axial Forces (C,T) | 90 lbs | 400.3 N | 30 lbs | 133.4 N |
| Moment (Mx) | 60 in-lbs | 6.8 Nm | 20 in-lbs | 2.3 Nm |
| Moment (My) | 80 in-lbs | 9.0 Nm | 25 in-lbs | 2.8 Nm |
| Moment (Mz) | 60 in-lbs | 6.8 Nm | 20 in-lbs | 2.3 Nm |

## Dimensional Information

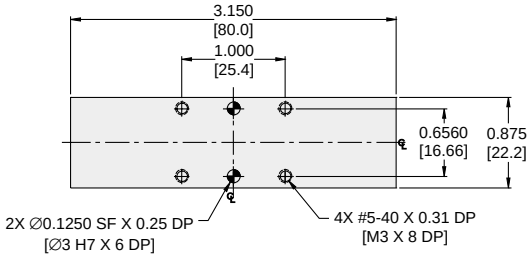


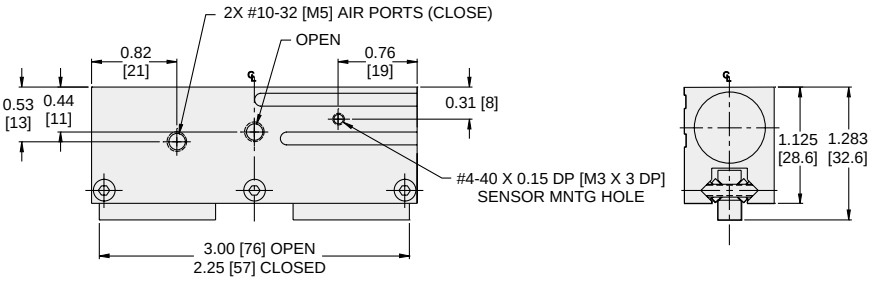


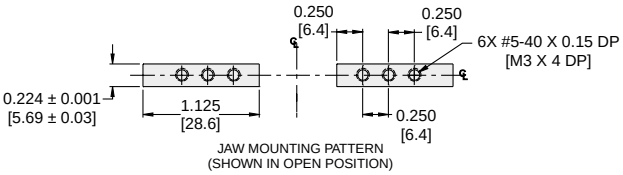


**Dimensions in inch (mm).**



**Parker Hannifin Corporation**
Actuator Division
Wadsworth, Ohio USA

## P5G-HPL-4M-NS-V

| | | |
|---|---|---|
| Total Grip Force (100 psi @ 1 in) | 33 lbs | 146 N |
| Stroke | 1.00 in | 25.4 mm |
| Weight | 0.38 lbs | 0.17 kg |
| Bore Size | 1/2 in | 12.7 mm |
| Cylinder Volume | 0.196 $in^3$ | 3.2 $cm^3$ |
| Repeatability | ± 0.001 in | ± 0.03 mm |
| Temperature Range* | -30° to 180° F | -35° to 80° C |
| Pressure Range | 5-100 psi | 0.3-7 bar |
| Filtration Requirement | 40 micron (dry air) | |

* Fluorocarbon seals available for high temperature applications

***Note: See model code and ordering information page for complete part number selection.***

## Loading Information

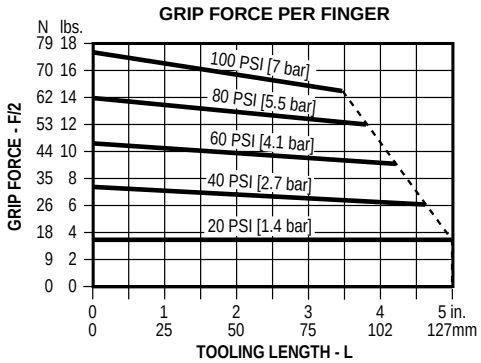


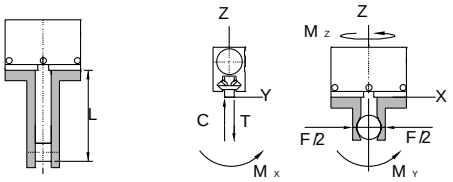


### Maximum Loading Capacity

| | Static | | Dynamic | |
|---|---|---|---|---|
| Axial Forces (C,T) | 120 lbs | 533.8 N | 40 lbs | 177.9 N |
| Moment (Mx) | 75 in-lbs | 8.5 Nm | 25 in-lbs | 2.8 Nm |
| Moment (My) | 100 in-lbs | 11.3 Nm | 35 in-lbs | 4.0 Nm |
| Moment (Mz) | 75 in-lbs | 8.5 Nm | 25 in-lbs | 2.8 Nm |

## Dimensional Information

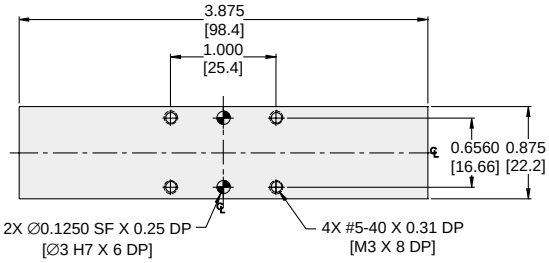


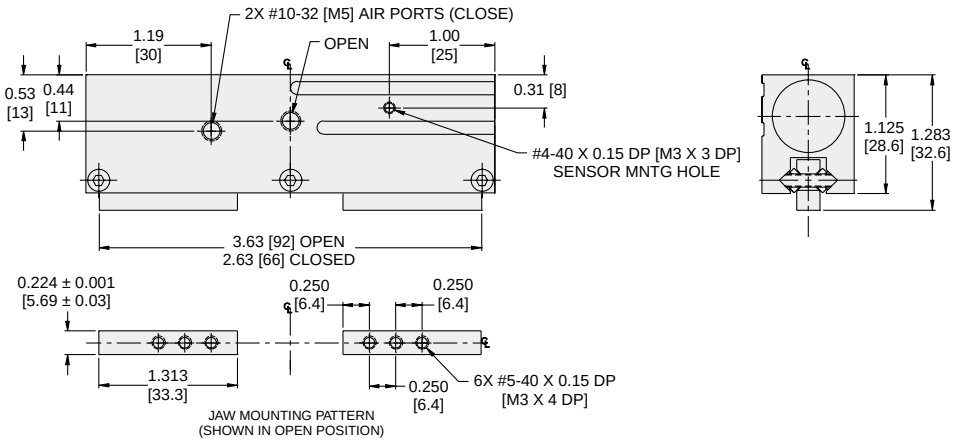


**Dimensions in inch (mm).**





**Parker Hannifin Corporation**
Actuator Division
Wadsworth, Ohio USA

## Clean Room (C)

Stainless steel plates are added to the gripper housing to protect the internal linkage from contaminants. These plates also prevent the generation of contaminants in clean-room applications.

A purge port is also added for extreme applications where air born contaminants may be introduced to the gripper. Applying vacuum pressure prevents the escape of contaminants generated by internal components.

Clean-room grade lubricants are used.

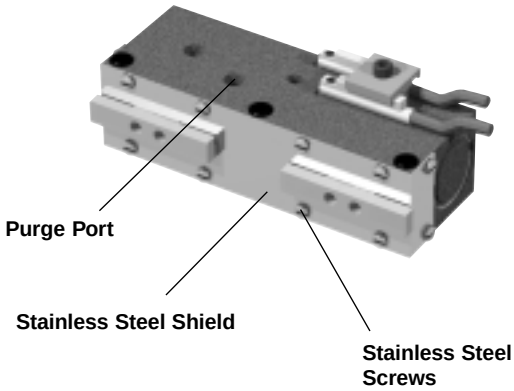


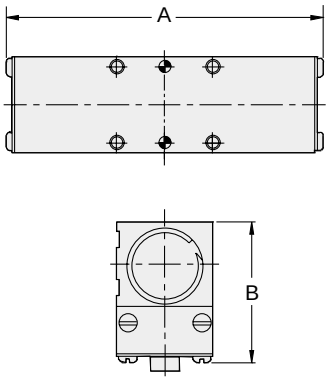


### Dimensions

| Size | A inch (mm) | B inch (mm) |
|---|---|---|
| 1 | 1.900 (48.3) | 1.096 (27.8) |
| 2 | 2.476 (62.9) | 1.096 (27.8) |
| 3 | 3.282 (83.4) | 1.191 (30.3) |
| 4 | 4.007 (101.8) | 1.191 (30.3) |

## Metric Option (M)

When using the P5G-HPL Series in metric applications, metric mounting and ports can be specified with the Metric Option. When specifying this option, the gripper incorporates metric threads and BSPG ports.

Reference the dimensional drawing for each size gripper for more details.

## Non-Synchronous (NS)

As standard the low profile series gripper fingers operate in a synchronized manner. For applications where parts may be off center or randomly placed, the non-synchronous option can be utilized. With this option both fingers operate independently of each other.

## Fluorocarbon Seals (V)

Standard nitrile seals should be used for general purpose applications with temperatures of –30° to 180° F (-35° to 80° C). Fluorocarbon seals are recommended for high temperature applications up to 250° F (120° C).

| Seal Type | Temperature Range |
|---|---|
| Standard Buna-N | -30° to 180°F (-35° to 80°C) |
| Fluorocarbon | -20° to 250°F (-30° to 120°C) |

## Sensors

The P5G-HPL series is prepared for Hall Effect sensors with a magnetic piston as standard. Hall Effect sensors can be ordered separately in either NPN or PNP configurations.

Order sensors, cables and mounting kits separately. See Sensor section for part numbers and sensor specifications.

### Dimensions

| Model | A inch (mm) |
|---|---|
| HPL-1 | 0.27 (7) |
| HPL-2 | 0.10 (3) |

Size 1 and 2

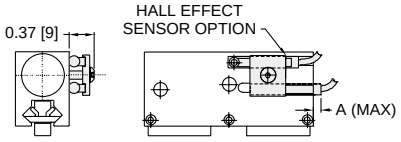


Size 3 and 4

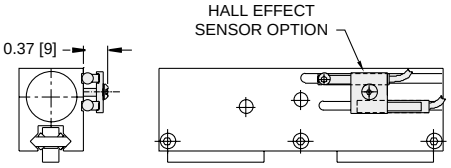






**Parker Hannifin Corporation**
Actuator Division
Wadsworth, Ohio USA

## Model Code and Ordering Information

P5G – HPL C – 2 M – NS – V

**Pneumatic Gripper**
P5G

**Series**
HPL

**Clean Room Option**
Omit – Standard
C – Clean Room Option

**Size**
1 – 7/16 inch Bore, 0.25 inch Stroke
2 – 7/16 inch Bore, 0.50 inch Stroke
3 – 1/2 inch Bore, 0.75 inch Stroke
4 – 1/2 inch Bore, 1.00 inch Stroke

**Design**
Omit – Imperial Design
M – Metric Design

**Non-synchronous Option**
Omit – Synchronous (Standard)
NS – Non-synchronous

**Seals**
Omit - Nitrile Seals (Standard)
V – Fluorocarbon Seals

## Seal Kits

| Size | Nitrile Seal Kit | Fluorocarbon Seal Kit |
|---|---|---|
| P5G-HPL-1 | PSK-HPL-1 | PSK-HPL-1V |
| P5G-HPL-2 | PSK-HPL-2 | PSK-HPL-2V |
| P5G-HPL-3 | PSK-HPL-3 | PSK-HPL-3V |
| P5G-HPL-4 | PSK-HPL-4 | PSK-HPL-4V |

## Features

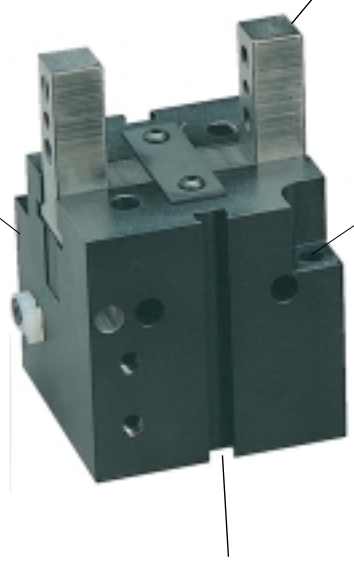

**Jaws**
Available in short and long configurations with tapped through-holes and dowel pin holes.

**Body**
Permanently sealed, anodized aluminum to provide maximum resistance to corrosion and internal contaminants

**Mounting**
Standard mounting on three faces with through-hole top mount and standard dowel pin holes to provide a precise alignment and easy installation.

**Fail Safe Option**
Internal springs act in the closed position to ensure that the part remains clamped in the event of a power failure

**Dowel Pin Holes**
Press fit dowels located in gripper body and jaws

**Seals**
Self lubricating dynamic seals (Nitrile only)

**Sensors**
Sensor grooves allow easy installation, adjustment of magneto resistive sensor. Magnetic piston is standard.

## Operation

Operating Characteristic ..... Double acting, spring closed

Gripping Force @ 100 PSI ..... 97 - 1767 N (16 - 365 lbs)

Stroke Range ..... 4-16 mm

Operating Pressure Range ..... 44 - 116 PSI (3 - 8 bar)

### Dust Cover Option

Available for dirty or harsh environments.

## Mounting

Gripper can be mounted on three faces and locates with dowel pin holes for accuracy.

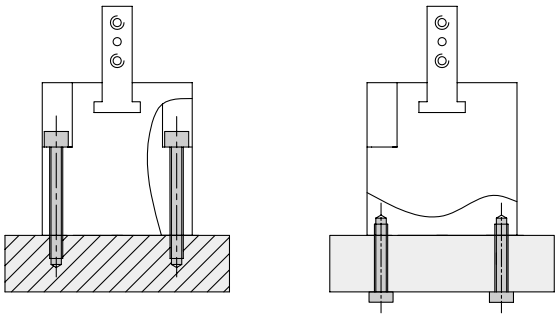

**Warning!** Protect drive and bearing mechanism from falling debris when mounted with fingers up.

## Contents

P5G-RH1 ..... 78
P5G-RH2 ..... 79
P5G-RH3 ..... 80
P5G-RH4 ..... 81
P5G-RH5 ..... 82
Jaw Option ..... 83
Spring Assist Option ..... 83
Dust Cover Option ..... 83
Sensors ..... 83
Ordering Information ..... 84





**Parker Hannifin Corporation**
Actuator Division
Wadsworth, Ohio USA

## P5G-RH1

| | | |
|---|---|---|
| Total Grip Force (100 psi @ 1 in) | 21.8 lbs | 97 N |
| Stroke | 0.1574 in | 4 mm |
| Weight | 0.22 lbs | 0.10 kg |
| Bore Size | 0.6299 in | 16 mm |
| Cylinder Volume | 0.045 $in^3$ | 0.75 $cm^3$ |
| Repeatability | +/- 0.002 in | +/- 0.05 mm |
| Temperature Range* | -4° to 158° F | -20° to 70° C |
| Pressure Range | 43.5-116 psi | 3-8 bar |
| Filtration Requirement | 40 micron (dry air) | |

* Fluorocarbon seals available for high temperature applications

***Note: See model code and ordering information page for complete part number selection.***

## Loading Information

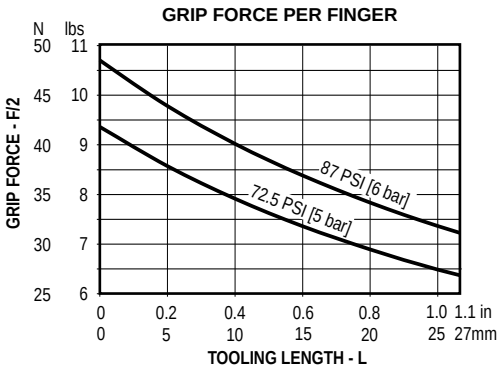


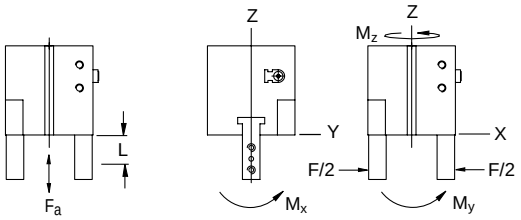


### Maximum Loading Capacity

| Load | Static | |
|---|---|---|
| Axial Forces (Fa) | 18 lbs | 80 N |
| Moment (Mx) | 4.4 in-lbs | 0.5 Nm |
| Moment (My) | 33.6 in-lbs | 3.8 Nm |
| Moment (Mz) | 17.7 in-lbs | 2 Nm |

## Dimensional Information

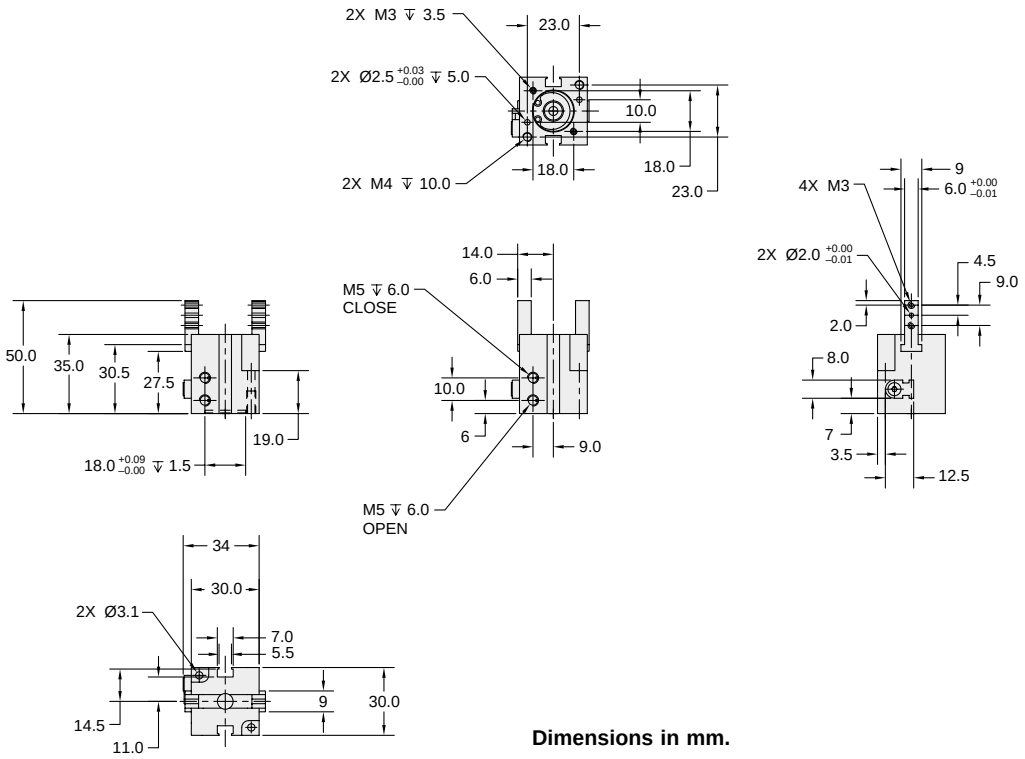


**Dimensions in mm.**



**Parker Hannifin Corporation**
Actuator Division
Wadsworth, Ohio USA

## P5G-RH2

| | | |
|---|---|---|
| Total Grip Force (100 psi @ 1 in) | 56.6 lbs | 252 N |
| Stroke | 0.236 in | 6 mm |
| Weight | 0.51 lbs | 0.23 kg |
| Bore Size | 0.984 in | 25 mm |
| Cylinder Volume | 0.167 $in^3$ | 2.75 $cm^3$ |
| Repeatability | +/- 0.002 in | +/- 0.05 mm |
| Temperature Range* | -4° to 158° F | -20° to 70° C |
| Pressure Range | 43.5-116 psi | 3-8 bar |
| Filtration Requirement | 40 micron (dry air) | |

* Fluorocarbon seals available for high temperature applications

***Note: See model code and ordering information page for complete part number selection.***

## Loading Information

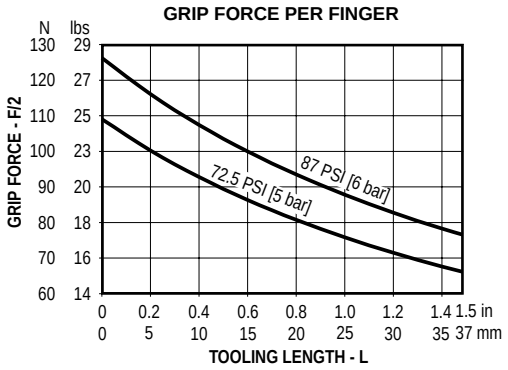


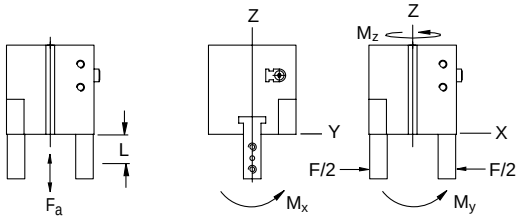


### Maximum Loading Capacity

| Load | Static | |
|---|---|---|
| Axial Forces (Fa) | 49.45 lbs | 220 N |
| Moment (Mx) | 10.62 in-lbs | 1.2 Nm |
| Moment (My) | 223 in-lbs | 25.2 Nm |
| Moment (Mz) | 115 in-lbs | 13 Nm |

## Dimensional Information

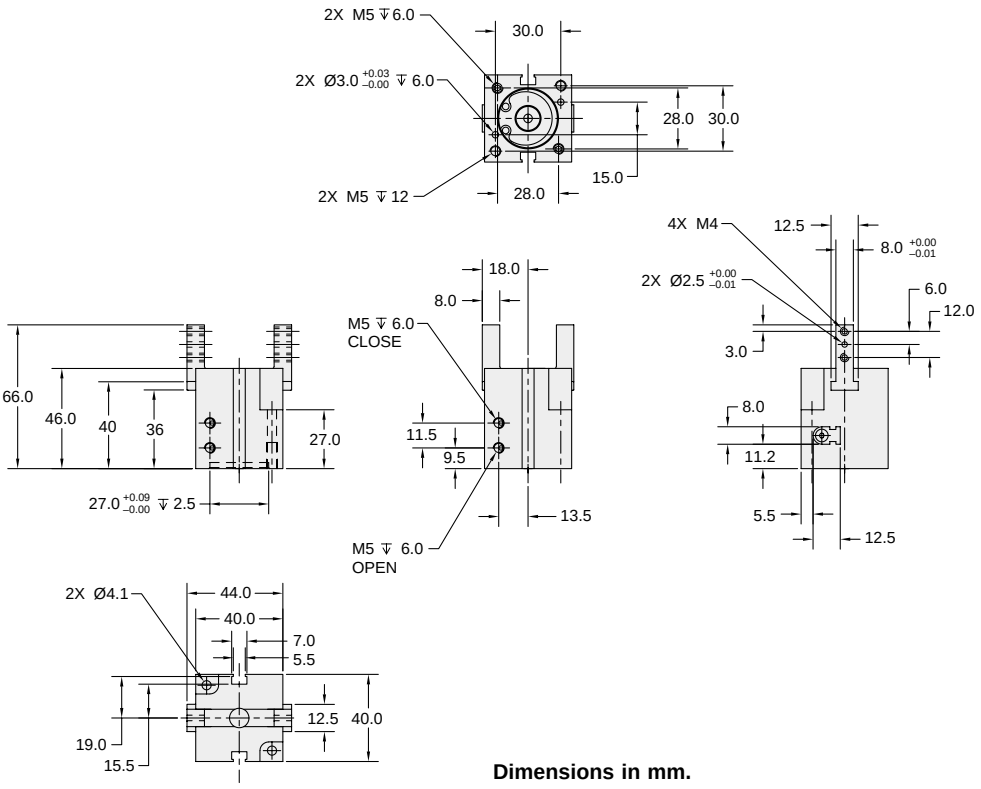


**Dimensions in mm.**





**Parker Hannifin Corporation**
Actuator Division
Wadsworth, Ohio USA

## P5G-RH3

| | | |
|---|---|---|
| Total Grip Force (100 psi @ 1 in) | 160.7 lbs | 715 N |
| Stroke | 0.3937 in | 10 mm |
| Weight | 1.08 lbs | 0.49 kg |
| Bore Size | 1.57 in | 40 mm |
| Cylinder Volume | 0.72 $in^3$ | 11.8 $cm^3$ |
| Repeatability | ± 0.002 in | ± 0.05 mm |
| Temperature Range* | -4° to 158° F | -20° to 70° C |
| Pressure Range | 43.5-116 psi | 3-8 bar |
| Filtration Requirement | 40 micron (dry air) | |

* Fluorocarbon seals available for high temperature applications

***Note: See model code and ordering information page for complete part number selection.***

## Loading Information

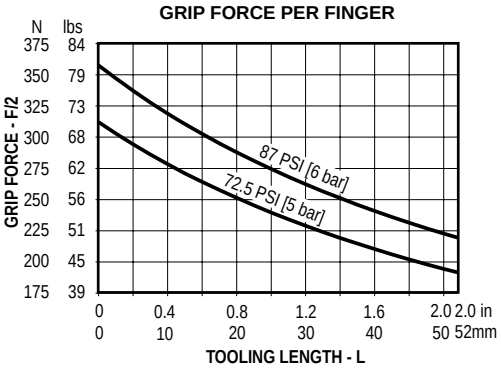


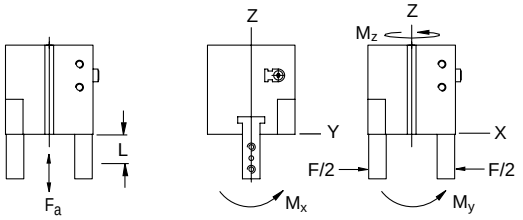


### Maximum Loading Capacity

| Load | Static | |
|---|---|---|
| Axial Forces (Fa) | 130.4 lbs | 580 N |
| Moment (Mx) | 38.9 in-lbs | 4.4 Nm |
| Moment (My) | 502.7 in-lbs | 56.8 Nm |
| Moment (Mz) | 256.6 in-lbs | 29 Nm |

## Dimensional Information

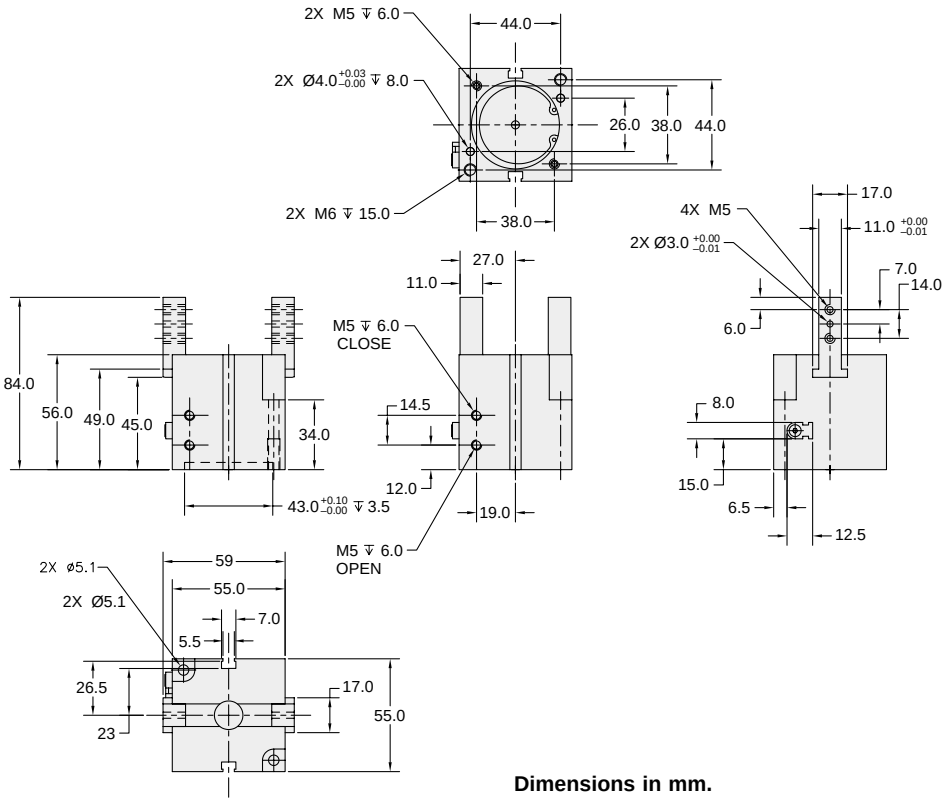


**Dimensions in mm.**



**Parker Hannifin Corporation**
Actuator Division
Wadsworth, Ohio USA

## P5G-RH4

| | | |
|---|---|---|
| Total Grip Force (100 psi @ 1 in) | 253.6 lbs | 1128 N |
| Stroke | 0.511 in | 13 mm |
| Weight | 1.72 lbs | 0.78 kg |
| Bore Size | 1.968 in | 50 mm |
| Cylinder Volume | 1.476 $in^3$ | 24.2 $cm^3$ |
| Repeatability | ± 0.002 in | ± 0.05 mm |
| Temperature Range* | -4° to 158° F | -20° to 70° C |
| Pressure Range | 43.5-116 psi | 3-8 bar |
| Filtration Requirement | 40 micron (dry air) | |

* Fluorocarbon seals available for high temperature applications

***Note: See model code and ordering information page for complete part number selection.***

## Loading Information

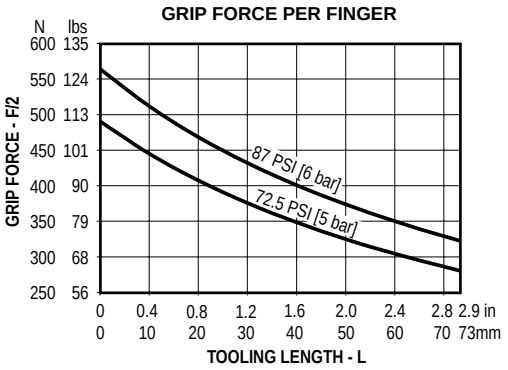


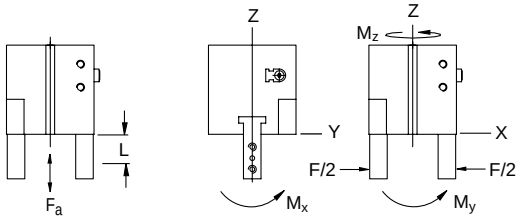


### Maximum Loading Capacity

| Load | Static | |
|---|---|---|
| Axial Forces (Fa) | 202.3 lbs | 900 N |
| Moment (Mx) | 70.8 in-lbs | 8 Nm |
| Moment (My) | 637.2 in-lbs | 72 Nm |
| Moment (Mz) | 318.6 in-lbs | 36 Nm |

## Dimensional Information

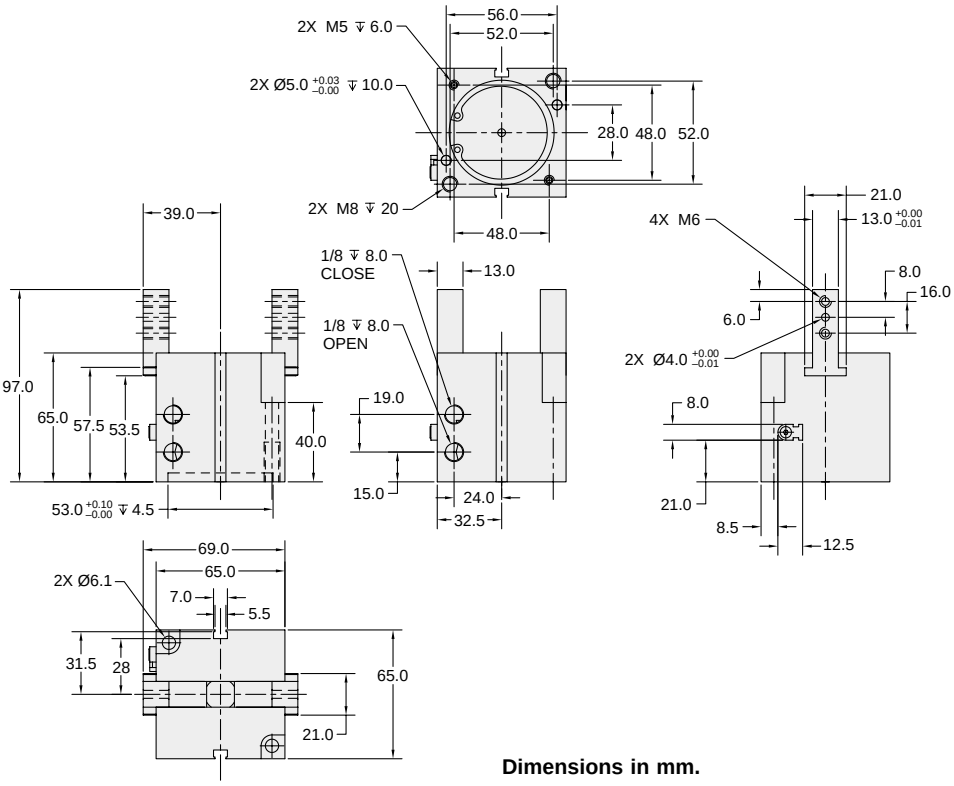


**Dimensions in mm.**





**Parker Hannifin Corporation**
Actuator Division
Wadsworth, Ohio USA

## P5G-RH5

| | | |
|---|---|---|
| Total Grip Force (100 psi @ 1 in) | 397.2 lbs | 1767 N |
| Stroke | 0.708 in | 18 mm |
| Weight | 2.93 lbs | 1.33 kg |
| Bore Size | 2.48 in | 63 mm |
| Cylinder Volume | 3.27 $in^3$ | 53.6 $cm^3$ |
| Repeatability | ± 0.002 in | ± 0.05 mm |
| Temperature Range* | -4° to 158° F | -20° to 70° C |
| Pressure Range | 43.5-116 psi | 3-8 bar |
| Filtration Requirement | 40 micron (dry air) | |

* Fluorcarbon seals available for high temperature applications

***Note: See model code and ordering information page for complete part number selection.***

## Loading Information

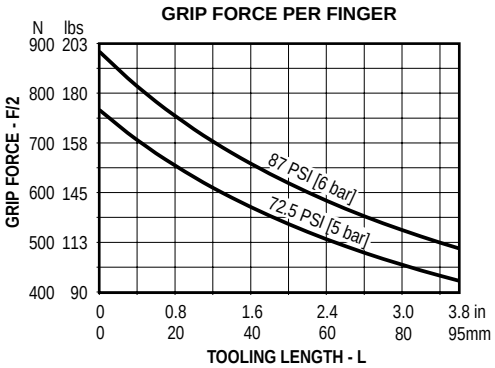


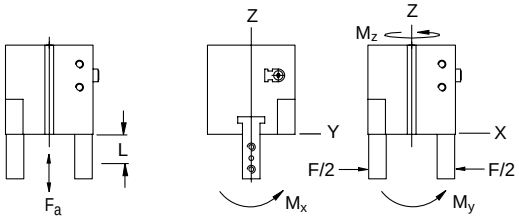


### Maximum Loading Capacity

| Load | Static | |
|---|---|---|
| Axial Forces (Fa) | 314.7 lbs | 1400 N |
| Moment (Mx) | 132.75 in-lbs | 15 Nm |
| Moment (My) | 773.5 in-lbs | 87.4 Nm |
| Moment (Mz) | 389.4 in-lbs | 44 Nm |

## Dimensional Information

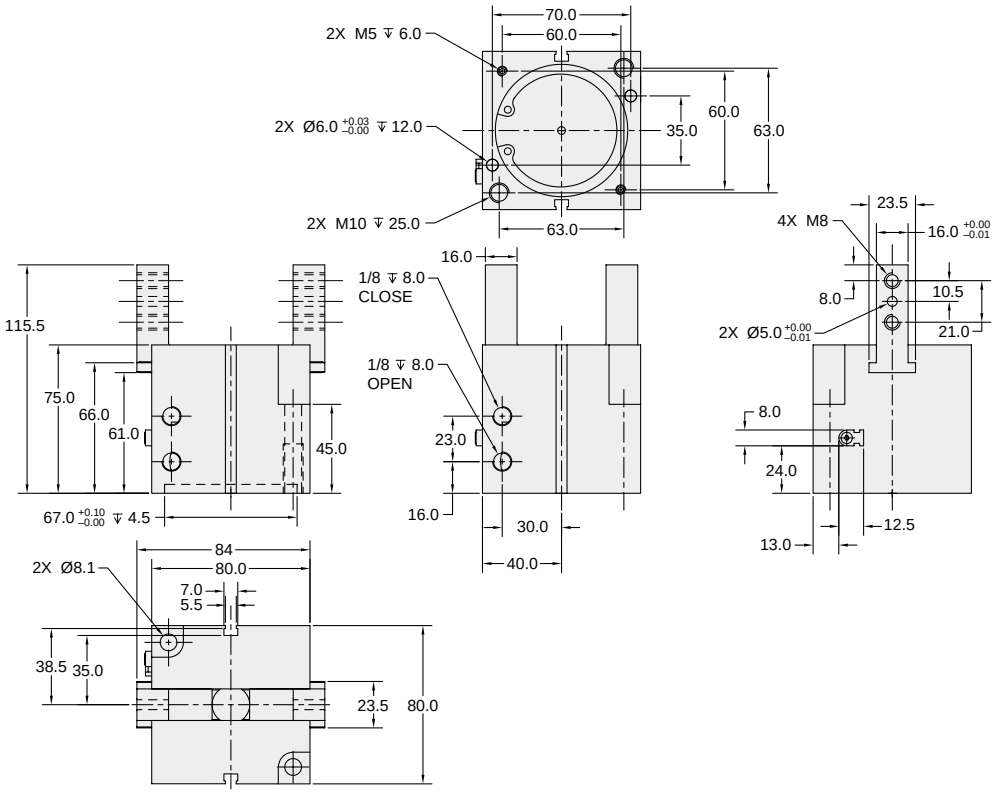


**Dimensions in mm.**



**Parker Hannifin Corporation**
Actuator Division
Wadsworth, Ohio USA

## Jaw Style Option (A, H)

Two jaw styles are available, Long (H) and Short (A). The long finger style is standard and allows for mounting on the edge of the jaw.

The optional short fingers allow for mounting on the face of the jaw. See illustration to the right for dimensional differences.

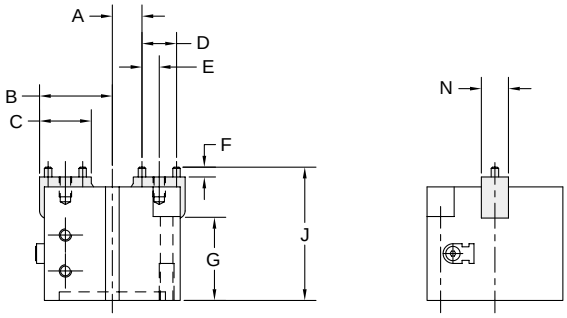


**Optional Short Jaw (A)**

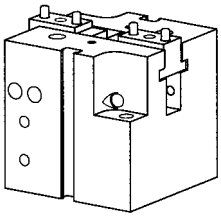

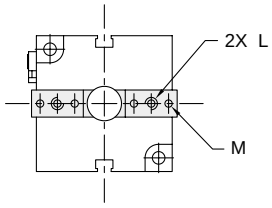


### Short Jaw Dimensions (mm)

| Model | A | B | C | D | E | F | G | J | L | M | N |
|---|---|---|---|---|---|---|---|---|---|---|---|
| P5G-RA1 | 7 | 17.5 | 12 | 9 | 4.5 | 2.5 | 19 | 9.5 | M3 x 5 dp | 2 | 9 |
| P5G-RA2 | 9.5 | 23.5 | 16.5 | 12 | 6 | 3.5 | 27 | 51.5 | M4 x 6.5 dp | 2.5 | 13 |
| P5G-RA3 | 15 | 32 | 20 | 14 | 7 | 4 | 34 | 62 | M5 x 8 dp | 3 | 17 |
| P5G-RA4 | 19.5 | 39 | 23 | 16 | 8 | 5 | 40 | 78 | M6 x 12 dp | 4 | 21 |
| P5G-RA5 | 23 | 47.5 | 28 | 21 | 10.5 | 6 | 45 | 91 | M8 x 15 dp | 5 | 24 |

## Spring Assist Option (F)

The spring assist option allows for an automatic reset and jaw return. Selecting the spring assist option creates a single-acting gripper which may reduce the number of directional control valves needed to operate automated machinery. The spring assist option also allows the fingers to return to the closed position when pressure is lost during a power failure.

| Size | Spring Force lbs | Spring Force N |
|---|---|---|
| 1 | 2.2 | 10 |
| 2 | 5.6 | 25 |
| 3 | 17.9 | 80 |
| 4 | 24.7 | 110 |
| 5 | 40.4 | 180 |

## Dust Cover (A)

A dust cover can be added to prevent machining chip contaminants from entering the working mechanism of the gripper. This dust cover is also ideal for dusty and dirty environments

## Reed and Hall Effect Sensors

Reed or Hall effect sensors mount in the sensor mounting grooves located in the gripper body. A magnetic piston is standard for ease of field addition of sensors.





**Parker Hannifin Corporation**
Actuator Division
Wadsworth, Ohio USA

## Model Code and Ordering Information

| P5G | – | R | H | 1 | B | 0 | C | 00 | 004 |
|---|---|---|---|---|---|---|---|---|---|

**Type**
P5G – Pneumatic Gripper

**Series**
R – Robotic

**Jaw Style**
H – Long Jaws (Standard)
A – Short Jaws

**Size**
1 – 16mm Bore
2 – 25mm Bore
3 – 40mm Bore
4 – 50mm Bore
5 – 63mm Bore

**Port Size**
B – M5 for sizes 1, 2 and 3
C – G1/8 for sizes 4 and 5

**Spring**
0 – No Spring (Standard)
F – Spring Assist

**Dust Cover**
C – No Dust Cover (Standard)
A – Dust Cover

**Function**
00 – Standard

**Stroke**
004 – Size 1
006 – Size 2
010 – Size 3
013 – Size 4
019 – Size 5

## Seal Kits

| Size | Nitrile Seal Kit |
|---|---|
| P5G-RH1 | PSK-RH1 |
| P5G-RH2 | PSK-RH2 |
| P5G-RH3 | PSK-RH3 |
| P5G-RH4 | PSK-RH4 |
| P5G-RH5 | PSK-RH5 |



**Parker Hannifin Corporation**
Actuator Division
Wadsworth, Ohio USA

## Features

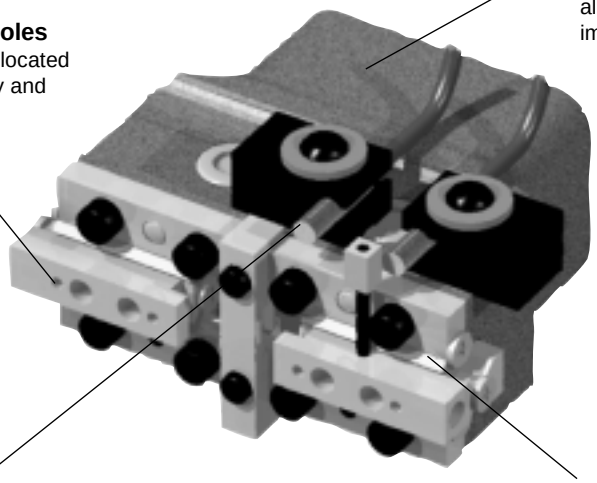

**Body**
One piece hard coat anodized aluminum body with Teflon® impregnation.

**Dowel Pin Holes**
Slip fit dowels located in gripper body and jaws.

**Seals**
Self lubricating dynamic seals (Nitrile only).

**Optional Non-Synchronous Motion**

**Optional Proximity Sensors**
Reads position of jaw (Sold separately)

**Preloaded Bearings**
Preloaded roller bearings provide maximum support and precise motion.

## Operation

Operating Characteristic ..... Double acting, rack and pinion

Gripping Force @ 100 PSI ..... 23 - 498 lbs

Stroke Range ..... 0.5 to 3 inches

Operating Pressure Range ..... 5 - 100 PSI (0.3 - 7 bar)

### Not Recommended for Applications Containing:

- Dirt or grit
- Machining chips
- Environments with loose particulate
- Mechanism lubricant that could cause contamination

## Mounting

Grippers can be mounted and operated in any orientation.

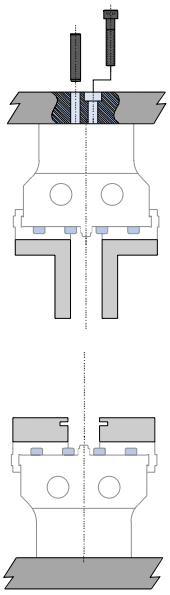

Body mounts with screws and locates with slip fit dowel pins for accuracy.

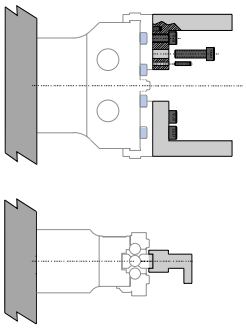

Fingers attach to jaws with screws and locate by keying or slip fit dowel pins.

**WARNING!** Protect drive and bearing mechanism from falling debris when mounted upside down.

## Contents

P5G-HP-50P ..... 86
P5G-HP-100P ..... 87
P5G-HP-25P ..... 88
P5G-HP-35P ..... 89
P5G-HP-40P ..... 90
P5G-HP-43P ..... 91
Metric Design Option ..... 92
Fluorocarbon Seals ..... 92
Sensors ..... 92
Ordering Information ..... 93





**Parker Hannifin Corporation**
Actuator Division
Wadsworth, Ohio USA

## P5G-HP-50PM-V

| | | |
|---|---|---|
| Total Grip Force (100 psi @ 1 in) | 23 lbs | 102 N |
| Stroke | 0.50 in | 12.7 mm |
| Weight | 0.31 lbs | 0.14 kg |
| Bore Size | 0.625 in | 5.9 mm |
| Cylinder Volume | 0.100 $in^3$ | 1.64 $cm^3$ |
| Repeatability | ± 0.0005 in | ± 0.01 mm |
| Temperature Range* | -30° to 180° F | -35° to 80° C |
| Pressure Range | 5-100 psi | 0.3-7 bar |
| Filtration Requirement | 40 micron (dry air) | |

* Fluorocarbon seals available for high temperature applications

***Note: See model code and ordering information page for complete part number selection.***

## Loading Information

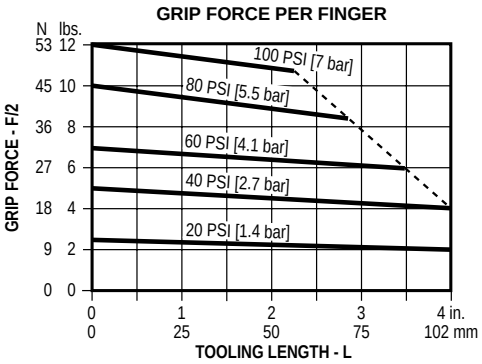


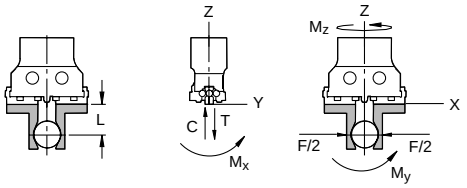


### Maximum Loading Capacity

| Load | Static | | Dynamic | |
|---|---|---|---|---|
| Axial Forces (C,T) | 50 lbs | 222 N | 15 lbs | 67 N |
| Moment (Mx) | 50 in-lbs | 6 Nm | 12 in-lbs | 1 Nm |
| Moment (My) | 60 in-lbs | 7 Nm | 15 in-lbs | 2 Nm |
| Moment (Mz) | 50 in-lbs | 6 Nm | 12 in-lbs | 1 Nm |

## Dimensional Information

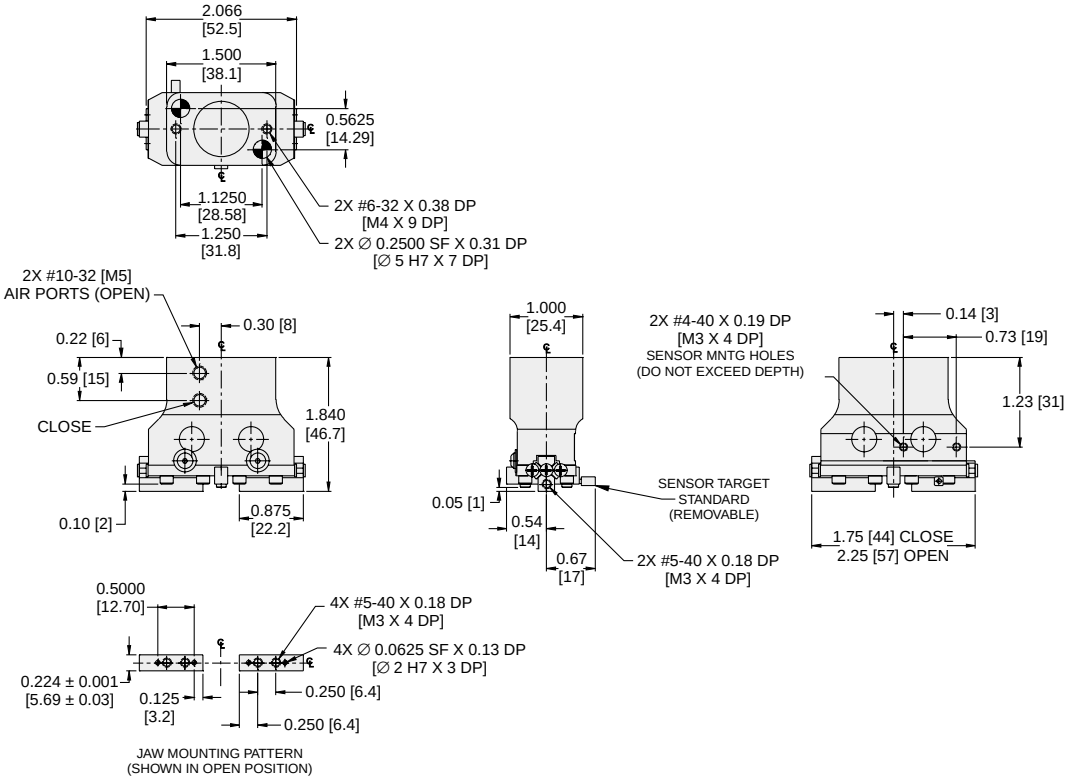


**Dimensions in inch (mm).**



**Parker Hannifin Corporation**
Actuator Division
Wadsworth, Ohio USA

## P5G-HP-100PM-V

| | | |
|---|---|---|
| Total Grip Force (100 psi @ 1 in) | 34 lbs | 151 N |
| Stroke | 1.00 in | 25.4 mm |
| Weight | 0.5 lbs | 0.23 kg |
| Bore Size | 0.750 in | 19.1 mm |
| Cylinder Volume | .220 $in^3$ | 3.6 $cm^3$ |
| Repeatability | ± 0.0005 in | ± 0.01 mm |
| Temperature Range* | -30° to 180° F | -35° to 80° C |
| Pressure Range | 5-100 psi | 0.3-7 bar |
| Filtration Requirement | 40 micron (dry air) | |

* Fluorocarbon seals available for high temperature applications

***Note: See model code and ordering information page for complete part number selection.***

## Loading Information

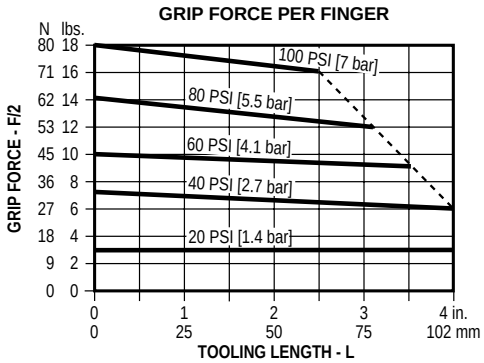


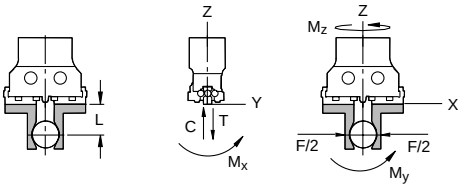


### Maximum Loading Capacity

| Load | Static | | Dynamic | |
|---|---|---|---|---|
| Axial Forces (C,T) | 60 lbs | 267 N | 20 lbs | 89 N |
| Moment (Mx) | 100 in-lbs | 11 Nm | 25 in-lbs | 3 Nm |
| Moment (My) | 120 in-lbs | 14 Nm | 30 in-lbs | 3 Nm |
| Moment (Mz) | 100 in-lbs | 11 Nm | 25 in-lbs | 3 Nm |

## Dimensional Information

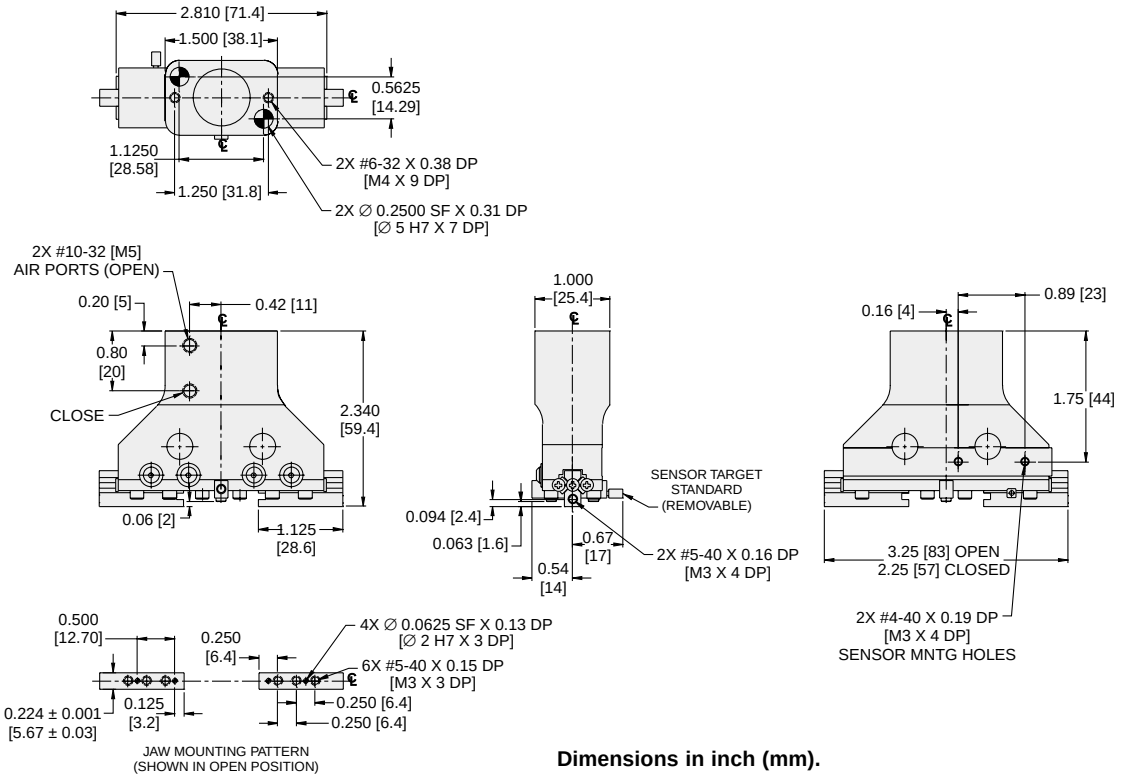


**Dimensions in inch (mm).**





**Parker Hannifin Corporation**
Actuator Division
Wadsworth, Ohio USA

## P5G-HP-25PM-V

| | | |
|---|---|---|
| Total Grip Force (100 psi @ 1 in) | 72 lbs | 320 N |
| Stroke | 1.13 in | 28.7 mm |
| Weight | 1.0 lbs | 0.45 kg |
| Bore Size | 1.00 in | 25.2 mm |
| Cylinder Volume | 0.500 $in^3$ | 8.2 $cm^3$ |
| Repeatability | ± 0.0005 in | ± 0.01 mm |
| Temperature Range* | -30° to 180° F | -35° to 80° C |
| Pressure Range | 5-100 psi | 0.3-7 bar |
| Filtration Requirement | 40 micron (dry air) | |

* Fluorocarbon seals available for high temperature applications

***Note: See model code and ordering information page for complete part number selection.***

## Loading Information

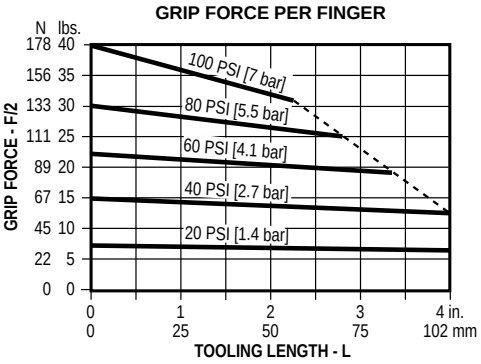


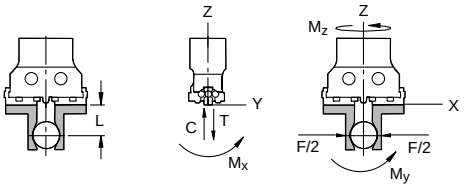


### Maximum Loading Capacity

| Load | Static | | Dynamic | |
|---|---|---|---|---|
| Axial Forces (C,T) | 100 lbs | 445 N | 30 lbs | 133 N |
| Moment (Mx) | 200 in-lbs | 23 Nm | 50 in-lbs | 6 Nm |
| Moment (My) | 250 in-lbs | 28 Nm | 60 in-lbs | 7 Nm |
| Moment (Mz) | 200 in-lbs | 23 Nm | 50 in-lbs | 6 Nm |

## Dimensional Information

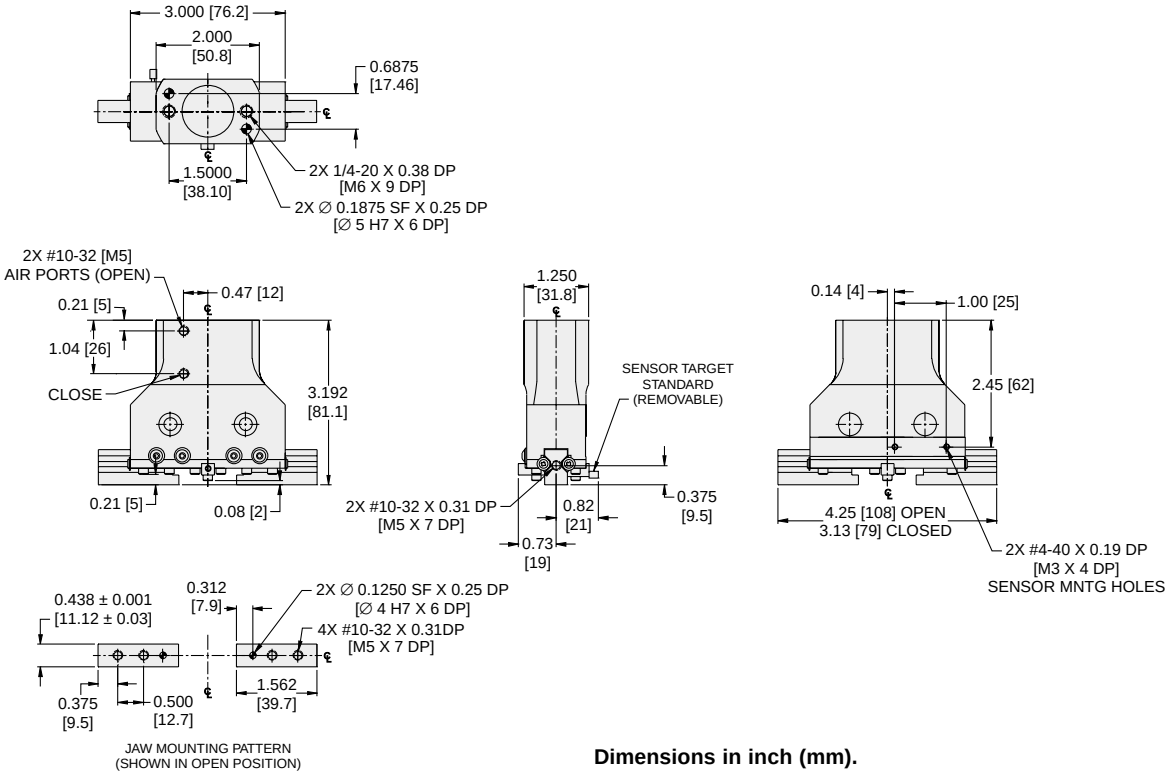


**Dimensions in inch (mm).**



**Parker Hannifin Corporation**
Actuator Division
Wadsworth, Ohio USA

## P5G-HP-35PM-V

| | | |
|---|---|---|
| Total Grip Force (100 psi @ 1 in) | 174 lbs | 774 N |
| Stroke | 1.00 in | 25.4 mm |
| Weight | 3.5 lbs | 1.6 kg |
| Bore Size | 1.62 in | 41.1 mm |
| Cylinder Volume | 1.036 $in^3$ | 17.0 $cm^3$ |
| Repeatability | ± 0.0005 in | ± 0.01 mm |
| Temperature Range* | -30° to 180° F | -35° to 80° C |
| Pressure Range | 5-100 psi | 0.3-7 bar |
| Filtration Requirement | 40 micron (dry air) | |

* Fluorocarbon seals available for high temperature applications

***Note: See model code and ordering information page for complete part number selection.***

## Loading Information

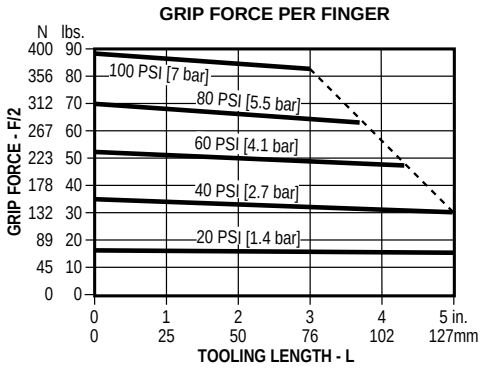


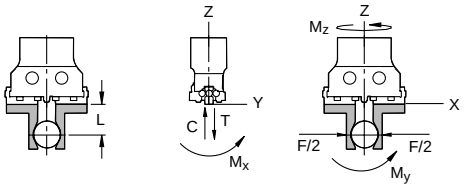


### Maximum Loading Capacity

| Load | Static | | Dynamic | |
|---|---|---|---|---|
| Axial Forces (C,T) | 200 lbs | 890 N | 75 lbs | 334 N |
| Moment (Mx) | 500 in-lbs | 57 Nm | 125 in-lbs | 14 Nm |
| Moment (My) | 600 in-lbs | 68 Nm | 150 in-lbs | 17 Nm |
| Moment (Mz) | 500 in-lbs | 57 Nm | 125 in-lbs | 14 Nm |

## Dimensional Information

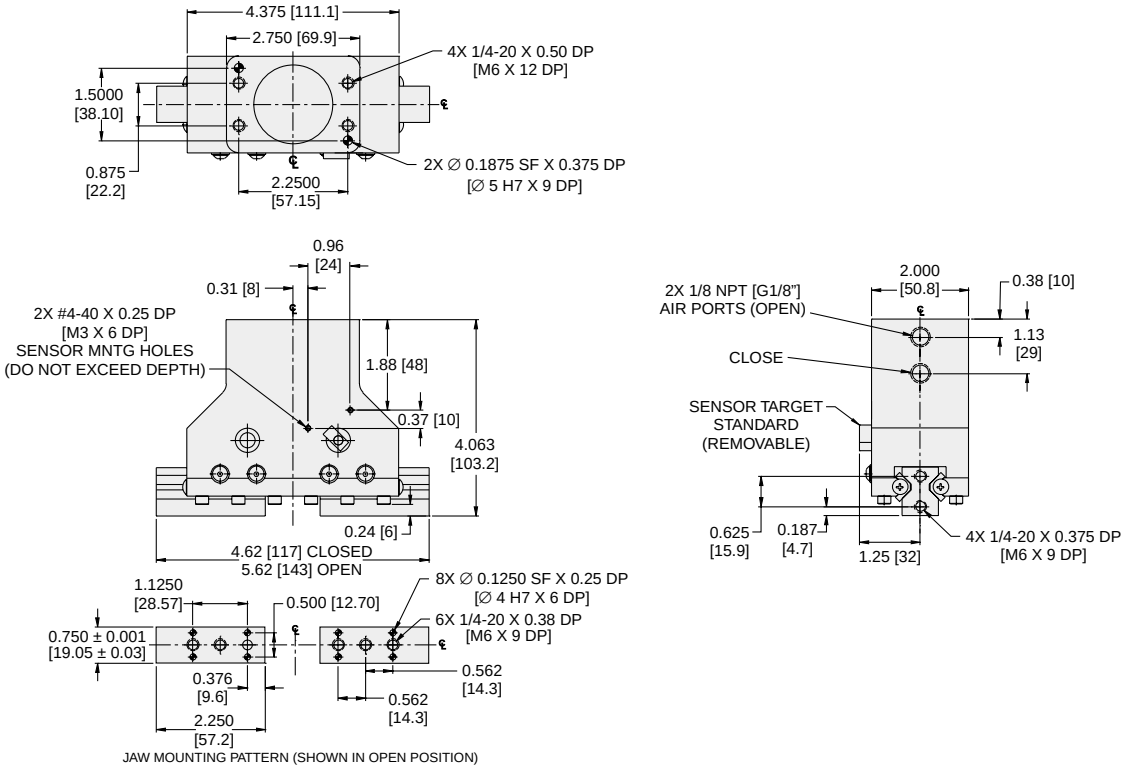


**Dimensions in inch (mm).**





**Parker Hannifin Corporation**
Actuator Division
Wadsworth, Ohio USA

## P5G-HP-40PM-V

| | | |
|---|---|---|
| Total Grip Force (100 psi @ 1 in) | 200 lbs | 890 N |
| Stroke | 2.00 in | 50.8 mm |
| Weight | 6.0 lbs | 2.7 kg |
| Bore Size | 1.75 in | 44.4 mm |
| Cylinder Volume | 1.710 $in^3$ | 28.0 $cm^3$ |
| Repeatability | ± 0.001 in | ± 0.03 mm |
| Temperature Range* | -30° to 180° F | -35° to 80° C |
| Pressure Range | 5-100 psi | 0.3-7 bar |
| Filtration Requirement | 40 micron (dry air) | |

* Fluorocarbon seals available for high temperature applications

***Note: See model code and ordering information page for complete part number selection.***

## Loading Information

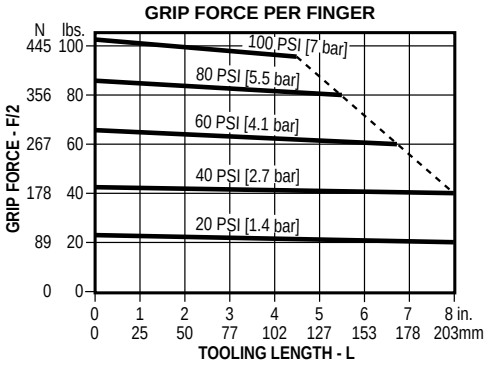


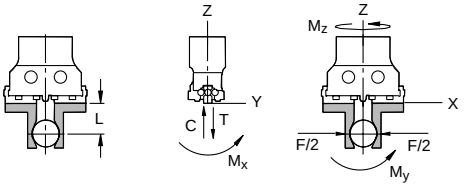


### Maximum Loading Capacity

| Load | Static | | Dynamic | |
|---|---|---|---|---|
| Axial Forces (C ,T) | 400 lbs | 1179 N | 150 lbs | 667 N |
| Moment (Mx) | 1000 in-lbs | 113 Nm | 250 in-lbs | 28 Nm |
| Moment (My) | 1200 in-lbs | 136 Nm | 300 in-lbs | 34 Nm |
| Moment (Mz) | 1000 in-lbs | 113 Nm | 250 in-lbs | 28 Nm |

## Dimensional Information

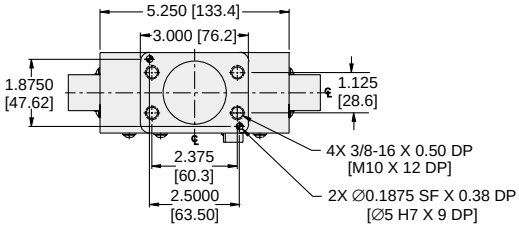


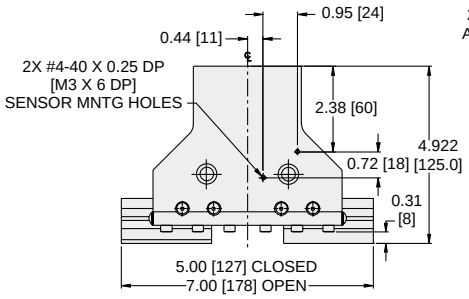


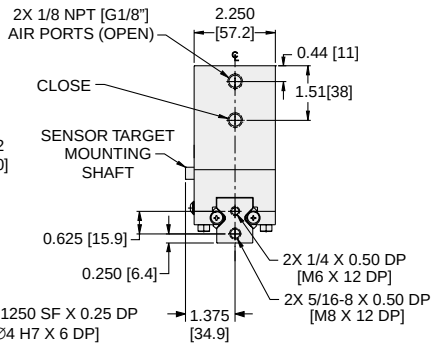


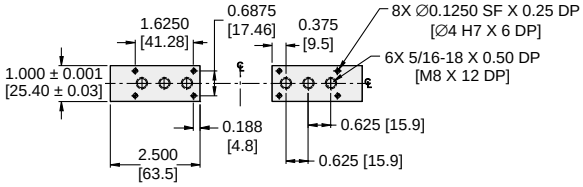


JAW MOUNTING PATTERN (SHOWN IN OPEN POSITION)

**Dimensions in inch (mm).**



**Parker Hannifin Corporation**
Actuator Division
Wadsworth, Ohio USA

## P5G-HP-43PM-V

| | | |
|---|---|---|
| Total Grip Force (100 psi @ 1 in) | 498 lbs | 2215 N |
| Stroke | 3.00 in | 76.2 mm |
| Weight | 16 lbs | 7.3 kg |
| Bore Size | 2.50 in | 63.5 mm |
| Cylinder Volume | 7.360 $in^3$ | 120.6 $cm^3$ |
| Repeatability | ± 0.001 in | ± 0.03 mm |
| Temperature Range* | -30° to 180° F | -35° to 80° C |
| Pressure Range | 5-100 psi | 0.3-7 bar |
| Filtration Requirement | 40 micron (dry air) | |

* Fluorocarbon seals available for high temperature applications

***Note: See model code and ordering information page for complete part number selection.***

## Loading Information

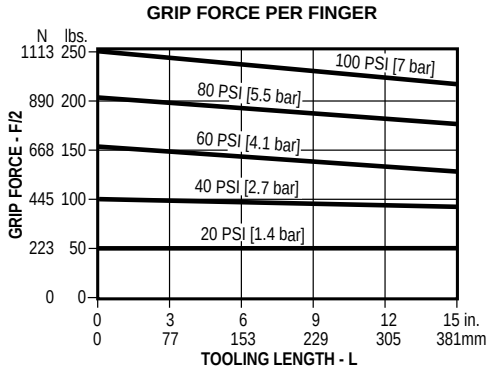


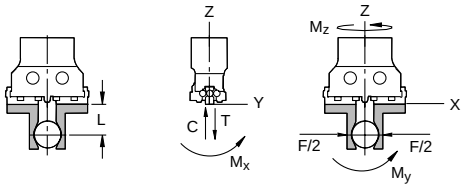


### Maximum Loading Capacity

| Load | Static | | Dynamic | |
|---|---|---|---|---|
| Axial Forces (C,T) | 1000 lbs | 4448 N | 350 lbs | 1557 N |
| Moment (Mx) | 2500 in-lbs | 283 Nm | 500 in-lbs | 57 Nm |
| Moment (My) | 3000 in-lbs | 339 Nm | 600 in-lbs | 68 Nm |
| Moment (Mz) | 2500 in-lbs | 283 Nm | 500 in-lbs | 57 Nm |

## Dimensional Information

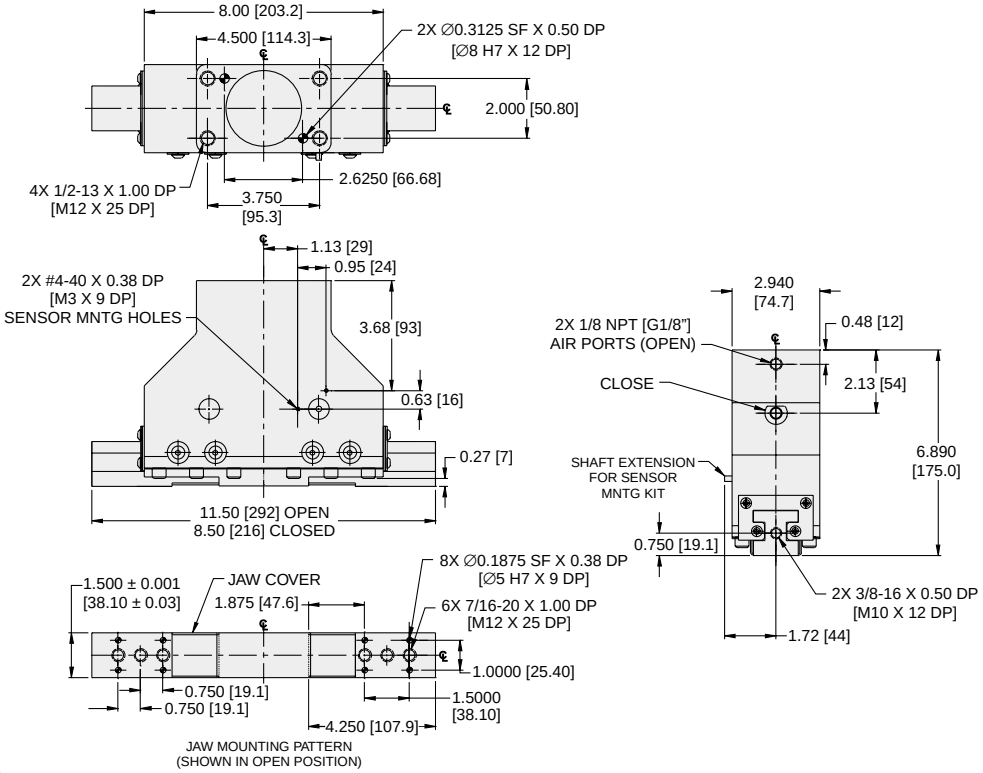


**Dimensions in inch (mm).**





**Parker Hannifin Corporation**
Actuator Division
Wadsworth, Ohio USA

## Metric Option (M)

The standard unit is manufactured with imperial mounting and porting. With this option specified, the gripper incorporates metric threads and ports.

Reference the dimensional drawings for each size gripper for more details.

## Fluorocarbon Seals (V)

Standard nitrile seals should be used for general purpose applications with temperatures of –30° to 180° F (-35° to 80° C). Fluorocarbon seals are recommended for high temperature applications up to 250° F (120° C).

| Seal Type | Temperature Range |
|---|---|
| Standard Buna-N | -30° to 180°F (-35° to 80°C) |
| Fluorocarbon | -20° to 250°F (-30° to 120°C) |

## Proximity Sensor

Proximity sensors provide feedback on the position of the gripper fingers by sensing the metal target. The P5G-HP-P series grippers come standard with the target assembled. The target can be removed in applications where it is not needed.

Proximity sensors, cables and mounting kits must be ordered separately. See Sensor section for part numbers and sensor specifications.

### Dimensions

| Model | A inch (mm) |
|---|---|
| HP-50P | 0.79 (20) |
| HP-100P | 0.79 (20) |
| HP-25P | 0.96 (24) |
| HP-35P | 1.41 (36) |
| HP-40P | 1.54 (39) |
| HP-43P | 1.88 (48) |

HP-50P, HP-100P, HP-25P

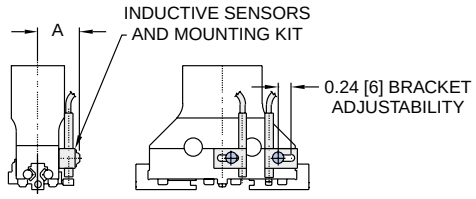


HP-35P, HP40P, HP-43P

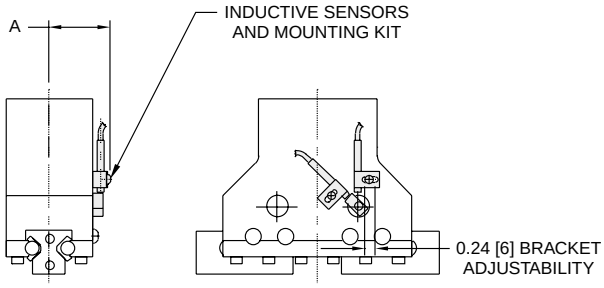

## Model Code and Ordering Information

P5G – HP – 50 P M – V

**Pneumatic Gripper**
P5G

**Series**
HP

**Size**
50 – 5/8 inch Bore, 0.50 inch Stroke
100 – 3/4 inch Bore, 1.00 inch Stroke
25 – 1.00 inch Bore, 1.13 inch Stroke
35 – 1.62 inch Bore, 1.00 inch Stroke
40 – 1.75 inch Bore, 2.00 inch Stroke
43 – 2.50 inch Bore, 3.00 inch Stroke

**Precision**
P

**Design**
Omit – Imperial Design (Standard)
M – Metric Design

**Seals**
Omit - Nitrile Seals (Standard)
V – Fluorocarbon Seals

### Seal Kits

| Size | Nitrile Seal Kit | Fluorocarbon Seal Kit |
|---|---|---|
| P5G-HP-50P | PSK-P5G-HP-50P | PSK-P5G-HP-50PV |
| P5G-HP-100P | PSK-P5G-HP-100P | PSK-P5G-HP-100PV |
| P5G-HP-25P | PSK-P5G-HP-25P | PSK-P5G-HP-25PV |
| P5G-HP-35P | PSK-P5G-HP-35P | PSK-P5G-HP-35PV |
| P5G-HP-40P | PSK-P5G-HP-40P | PSK-P5G-HP-40PV |
| P5G-HP-43P | PSK-P5G-HP-43P | PSK-P5G-HP-43PV |





**Parker Hannifin Corporation**
Actuator Division
Wadsworth, Ohio USA

**Parker Hannifin Corporation**
Actuator Division
Wadsworth, Ohio USA

## Features

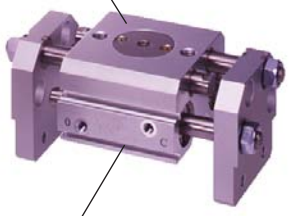

**Body**
One piece anodized aluminum body

**Bushings**
Four composite bushings provide the support needed for high force applications.

**Rack and Pinion**
Rack and pinion drive mechanism provides synchronous motion.

**Contaminant Tolerance**
Sealed design resists internal contamination.

**Double Piston**
Two pistons provide large grip forces from a small compact package.

**Sensors**
Sensor grooves allow for easy installation, adjustment of Hall effect sensor. Magnetic piston is standard.

**Seals**
Self lubricating dynamic seals (Nitrile only)

## Operation

Operating Characteristic ..... Double acting, double piston, rack and pinion
Gripping Force @ 100 PSI ..... 88 - 400 N (20 - 90 lbs)
Stroke Range ..... 24-50 mm
Operating Pressure Range ..... 30 - 100 PSI (2 - 7 bar)

## Mounting

Grippers can be mounted and operated in any orientation.

Grippers can be mounted on three faces.

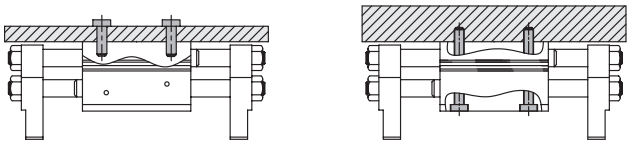

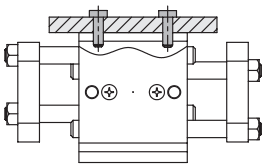

20 and 25mm bore only

## Contents

GPK-12 ..... 96
GPK-16 ..... 97
GPK-20 ..... 98
GPK-25 ..... 99
Sensors ..... 100
Ordering Information ..... 100
Seal Kits ..... 100





**Parker Hannifin Corporation**
Actuator Division
Wadsworth, Ohio USA

# GPK-12

| | | |
|---|---|---|
| Total Grip Force (100 psi @ 1 in) | 19.7 lbs | 88 N |
| Stroke | 0.944 in | 24 mm |
| Weight | 0.187 lbs | 0.085 kg |
| Bore Size | 0.47 in | 12 mm |
| Cylinder Volume | 0.32 $in^3$ | 5.4 $cm^3$ |
| Repeatability | ± 0.0027 in | ± 0.07 mm |
| Temperature Range | 41° to 140° F | 5° to 60° C |
| Pressure Range | 29-101 psi | 2-7 bar |
| Filtration Requirement | 40 micron (dry air) | |

***Note: See model code and ordering information page for complete part number selection.***

## Loading Information

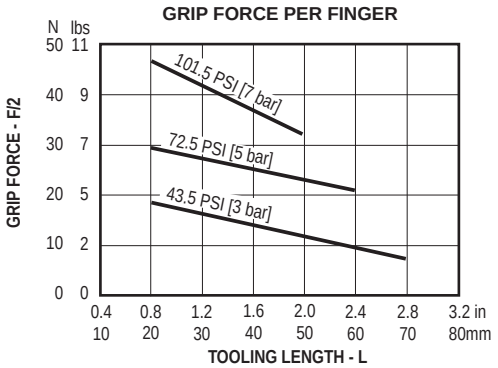


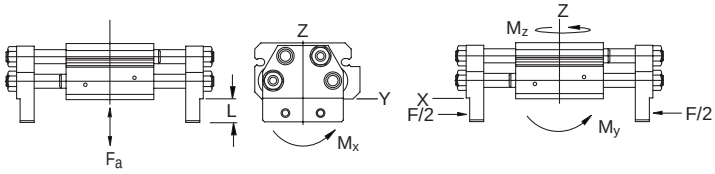


### Maximum Loading Capacity

| Load | Static | | Dynamic | |
|---|---|---|---|---|
| Axial Forces (F) | 40 lbs | 178 N | 49.9 lbs | 222 N |
| Moment (Mx) | 79.6 in-lbs | 9 Nm | 100 in-lbs | 11.3 Nm |
| Moment (My) | 120 in-lbs | 13.6 Nm | 149 in-lbs | 16.9 Nm |
| Moment (Mz) | 79.6 in-lbs | 9.0 Nm | 100 in-lbs | 11.3 Nm |

## Dimensional Information

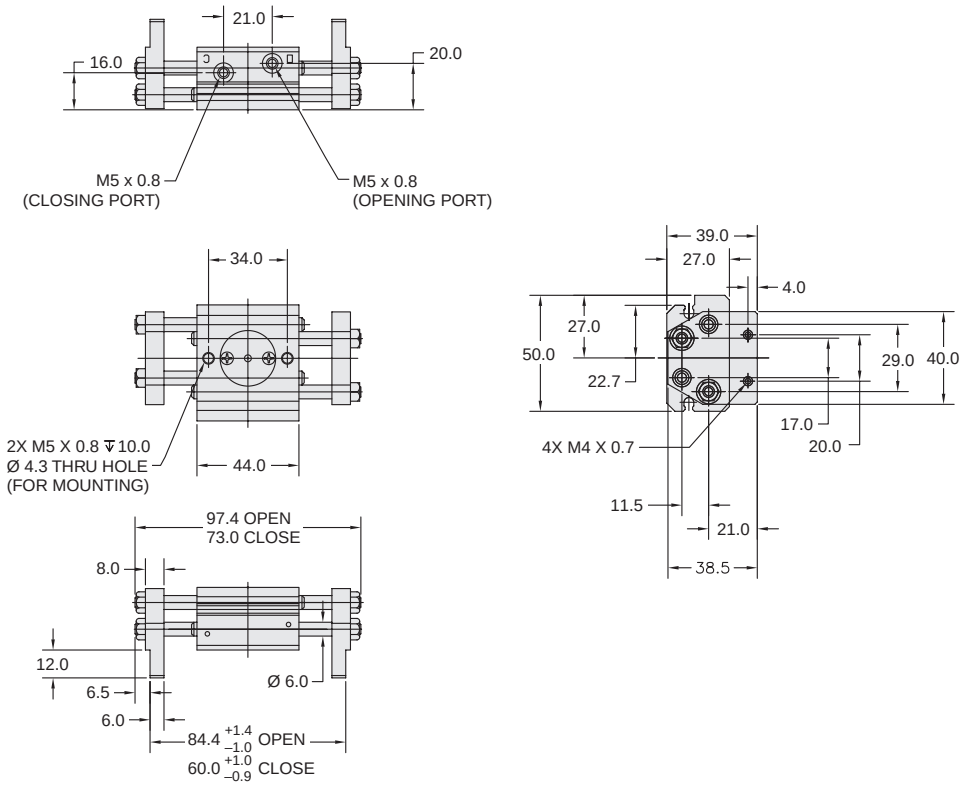


**Dimensions in mm.**



**Parker Hannifin Corporation**
Actuator Division
Wadsworth, Ohio USA

# GPK-16

| | | |
|---|---|---|
| Total Grip Force (100 psi @ 1 in) | 36.8 lbs | 164 N |
| Stroke | 1.25 in | 32 mm |
| Weight | 0.187 lbs | 0.085 kg |
| Bore Size | 0.629 in | 16 mm |
| Cylinder Volume | 0.78 $in^3$ | 12.86 $cm^3$ |
| Repeatability | ± 0.0027 in | ± 0.07 mm |
| Temperature Range | 41° to 140° F | 5° to 60° C |
| Pressure Range | 29-101 psi | 2-7 bar |
| Filtration Requirement | 40 micron (dry air) | |

***Note: See model code and ordering information page for complete part number selection.***

## Loading Information

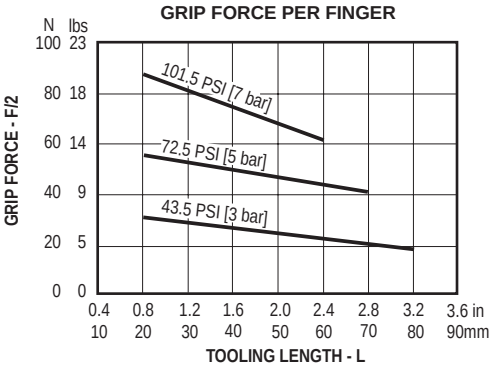


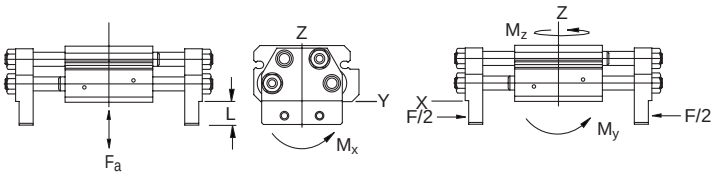


### Maximum Loading Capacity

| Load | Static | | Dynamic | |
|---|---|---|---|---|
| Axial Forces (F) | 49.9 lbs | 222 N | 100 lbs | 445 N |
| Moment (Mx) | 90.3 in-lbs | 10.1 Nm | 173 in-lbs | 19.5 Nm |
| Moment (My) | 130 in-lbs | 14.7 Nm | 251 in-lbs | 28.3 Nm |
| Moment (Mz) | 90.3 in-lbs | 10.2 Nm | 175 in-lbs | 19.8 Nm |

## Dimensional Information

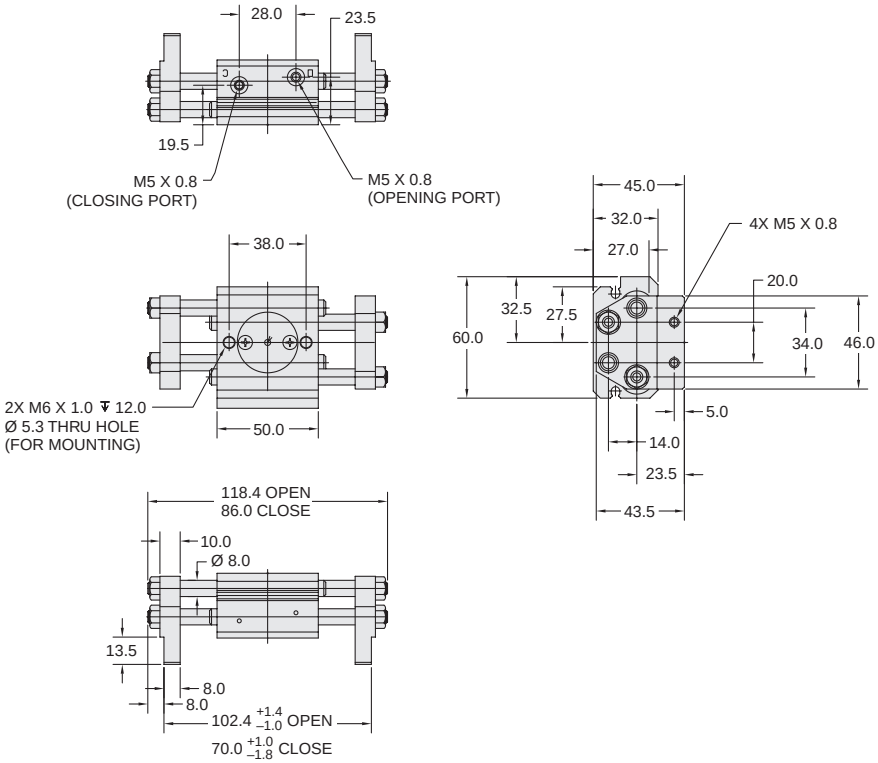


**Dimensions in mm.**





**Parker Hannifin Corporation**
Actuator Division
Wadsworth, Ohio USA

## GPK-20

| | | |
|---|---|---|
| Total Grip Force (100 psi @ 1 in) | 58.4 lbs | 260 N |
| Stroke | 1.57 in | 40 mm |
| Weight | 0.43 lbs | 0.195 kg |
| Bore Size | 0.787 in | 20 mm |
| Cylinder Volume | 1.53 $in^3$ | 25.12 $cm^3$ |
| Repeatability | ± 0.0027 in | ± 0.07 mm |
| Temperature Range | 41° to 140° F | 5° to 60° C |
| Pressure Range | 29-101 psi | 2-7 bar |
| Filtration Requirement | 40 micron (dry air) | |

***Note: See model code and ordering information page for complete part number selection.***

## Loading Information

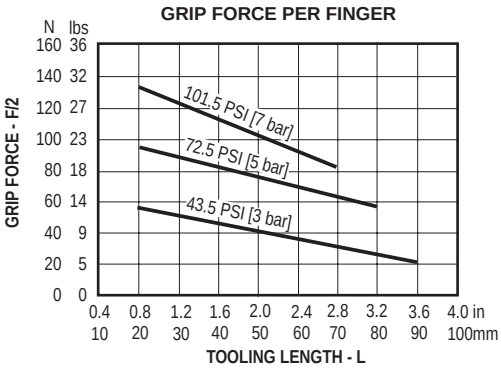


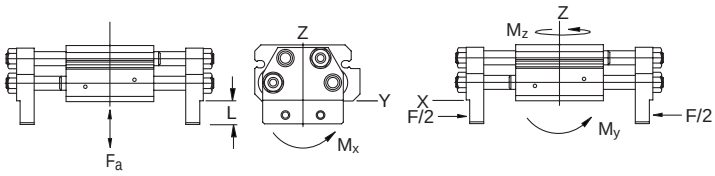


### Maximum Loading Capacity

| Load | Static | | Dynamic | |
|---|---|---|---|---|
| Axial Forces (Fa) | 70.1 lbs | 312 N | 500 lbs | 2223 N |
| Moment (Mx) | 69.9 in-lbs | 7.9 Nm | 500 in-lbs | 56.5 Nm |
| Moment (My) | 130 in-lbs | 14.7 Nm | 751 in-lbs | 84.8 Nm |
| Moment (Mz) | 69.9 in-lbs | 7.9 Nm | 500 in-lbs | 56.5 Nm |

## Dimensional Information

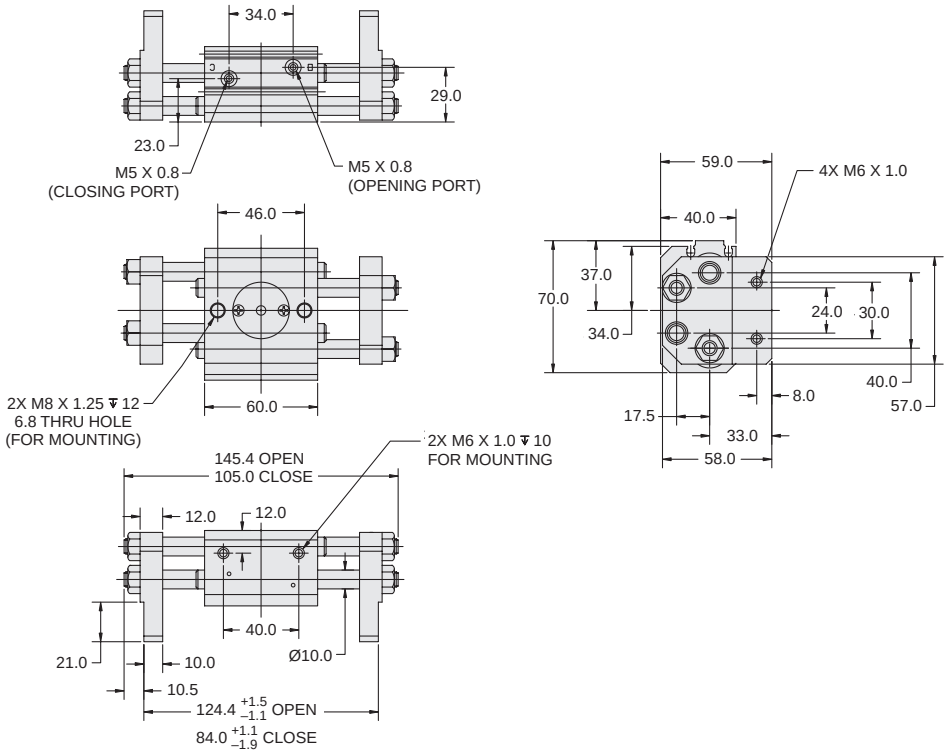


**Dimensions in mm.**



**Parker Hannifin Corporation**
Actuator Division
Wadsworth, Ohio USA

# GPK-25

| | | |
|---|---|---|
| Total Grip Force (100 psi @ 1 in) | 89.9 lbs | 400 N |
| Stroke | 1.96 in | 50 mm |
| Weight | 0.43 lbs | 0.195 kg |
| Bore Size | 0.984 in | 25 mm |
| Cylinder Volume | 2.99 $in^3$ | 49.06 $cm^3$ |
| Repeatability | ± 0.0027 in | ± 0.07 mm |
| Temperature Range | 41° to 140° F | 5° to 60° C |
| Pressure Range | 29-101 psi | 2-7 bar |
| Filtration Requirement | 40 micron (dry air) | |

***Note: See model code and ordering information page for complete part number selection.***

## Loading Information

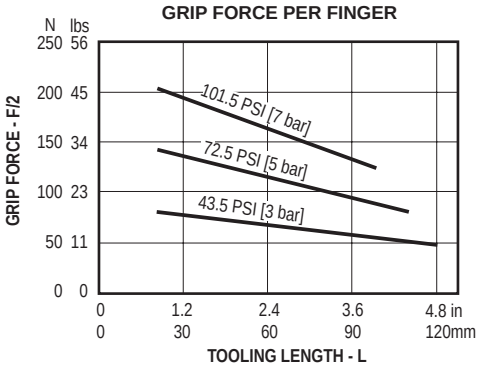


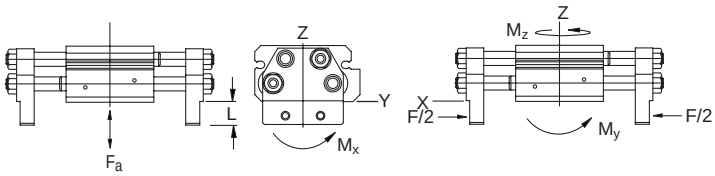


### Maximum Loading Capacity

| Load | Static | | Dynamic | |
|---|---|---|---|---|
| Axial Forces (Fa) | 90.1 lbs | 401 N | 500 lbs | 2223 N |
| Moment (Mx) | 90.3 in-lbs | 10.2 Nm | 500 in-lbs | 56.5 Nm |
| Moment (My) | 160 in-lbs | 18.1 Nm | 751 in-lbs | 84.8 Nm |
| Moment (Mz) | 90.3 in-lbs | 10.2 Nm | 500 in-lbs | 56.5 Nm |

## Dimensional Information

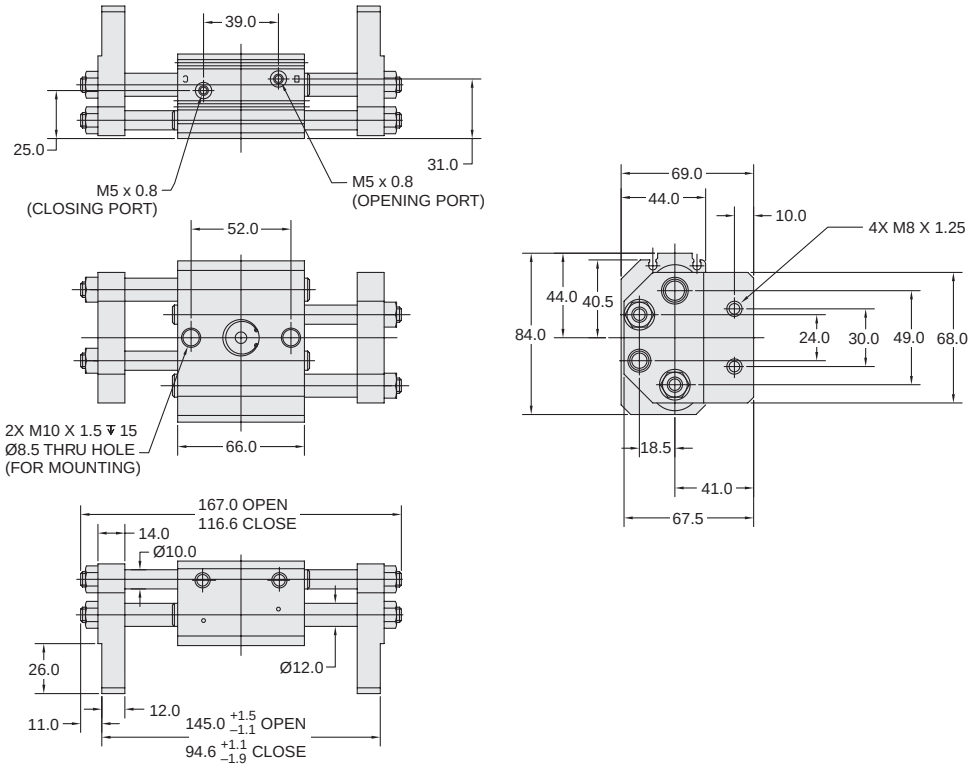


**Dimensions in mm.**





**Parker Hannifin Corporation**
Actuator Division
Wadsworth, Ohio USA

## Magnetic Piston (Standard)

The GPK Series grippers include a standard magnetic piston to sense piston position. Hall Effect switches can be mounted in the sensor mounting groove located in the gripper body.

Order sensors separately. See Sensor section for sensor part numbers and specifications.

## Model Code and Ordering Information

**GPK – 12**

**Series**
GPK

**Size**
12 – 12mm Bore
16 – 16mm Bore
20 – 20mm Bore
25 – 25mm Bore

## Seal Kits

| Size | Nitrile Seal Kit |
|---|---|
| GPK-12 | PSK-GPK-12 |
| GPK-16 | PSK-GPK-16 |
| GPK-20 | PSK-GPK-20 |
| GPK-25 | PSK-GPK-25 |



**Parker Hannifin Corporation**
Actuator Division
Wadsworth, Ohio USA

## Features

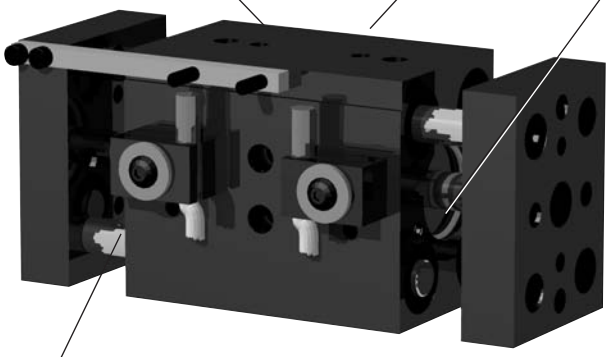

**Dowel Pin Holes**
Slip fit dowels located in gripper body and jaws.

**Body**
One piece anodized aluminum body

**Oversize Body**
Wide body and long stroke design allow for gripping of large, heavy parts.

**Contaminant Tolerance**
Sealed design resists internal contamination.

**Double PIston Design**
Double piston design provides maximum grip force to size ratio

**Optional Proximity Sensors**
Read position of jaw. (Sold separately)

**Seals**
Self lubricating dynamic seals (Nitrile only)

**Superior Jaw Support**
Each jaw is supported by two shafts and four self lubricating, oil impregnated bronze bushings for maximum loading.

**Double Rod Seals**
Double rod seals for longer life.

## Operation

Operating Characteristic ..... Double acting, double piston, rack and pinion

Gripping Force @ 100 PSI ..... 45 - 450 lbs

Stroke Range ..... 0.75 to 4.5 inches

Operating Pressure Range ..... 40 - 100 PSI (3 - 7 bar)

## Mounting

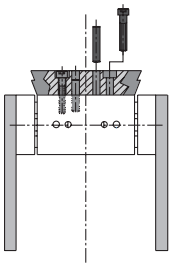

Gripper mounts using tapped holes and slip fit dowel pin holes.

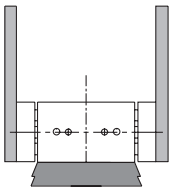

Jaw design allows for simplified mounting of fingers.

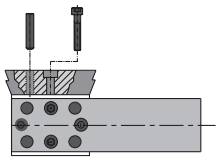

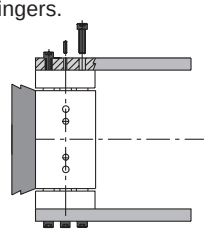

Custom finger tooling mounts using tapped holes and precise tolerancing of fingers.

## Contents

P5G-HPW-250 ..... 102
P5G-HPW-375(M)-1 ..... 103
P5G-HPW-375(M)-2 ..... 104
P5G-HPW-500(M)-1 ..... 105
P5G-HPW-500(M)-2 ..... 106
P5G-HPW-625(M)-1 ..... 107
P5G-HPW-625(M)-2 ..... 108
P5G-HPW-750 ..... 109
Metric Design Option ..... 110
Non-Synchronous Option ..... 110
Fluorocarbon Seals ..... 110
Sensors ..... 110
Ordering Information ..... 111
Seal Kits ..... 111





**Parker Hannifin Corporation**
Actuator Division
Wadsworth, Ohio USA

## P5G-HPW-250M-NS-V

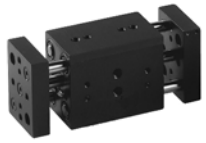

| | | |
|---|---|---|
| Total Grip Force (100 psi @ 1 in) | 45 lbs | 200 N |
| Stroke | 0.75 in | 19.1 mm |
| Weight | 0.66 lbs | 0.30 kg |
| Bore Size | 0.625 in | 15.9 mm |
| Cylinder Volume | 0.230 $in^3$ | 3.8 $cm^3$ |
| Repeatability | ± 0.001 in | ± 0.03 mm |
| Temperature Range* | -30° to 180° F | -35° to 80° C |
| Pressure Range | 40-100 psi | 3-7 bar |
| Filtration Requirement | 40 micron (dry air) | |

* Fluorocarbon seals available for high temperature applications

***Note: See model code and ordering information page for complete part number selection.***

## Loading Information

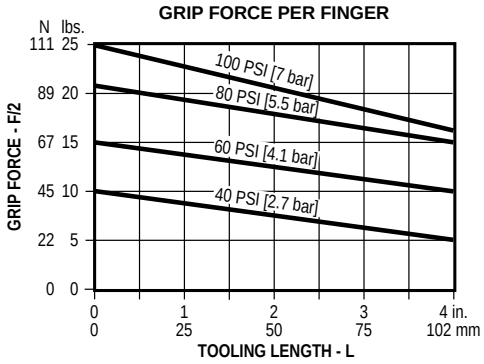


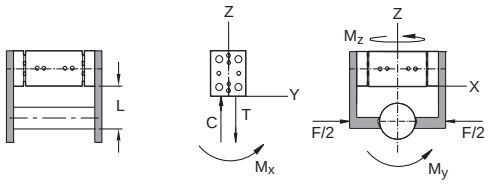


### Maximum Loading Capacity

| Load | Static | | Dynamic | |
|---|---|---|---|---|
| Axial Forces (C,T) | 50 lbs | 222 N | 10 lbs | 44 N |
| Moment (Mx) | 100 in-lbs | 11 Nm | 20 in-lbs | 2 Nm |
| Moment (My) | 150 in-lbs | 17 Nm | 30 in-lbs | 3 Nm |
| Moment (Mz) | 100 in-lbs | 11 Nm | 20 in-lbs | 2 Nm |

## Dimensional Information

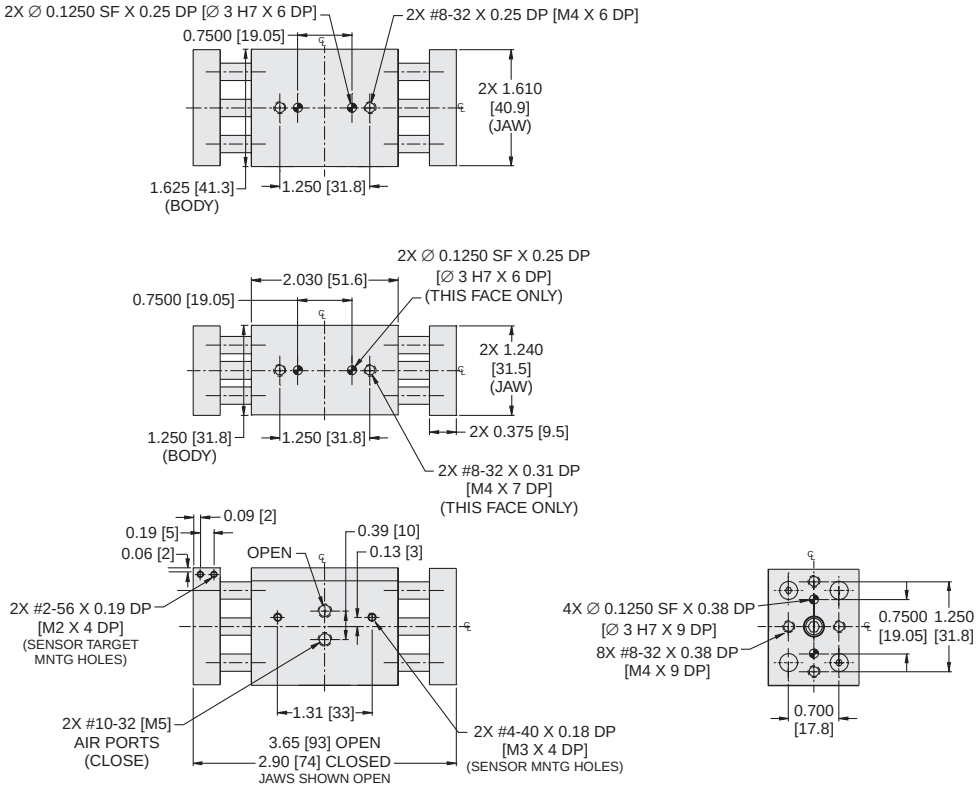


**Dimensions in inch [mm].**



**Parker Hannifin Corporation**
Actuator Division
Wadsworth, Ohio USA

## P5G-HPW-375M1-NS-V

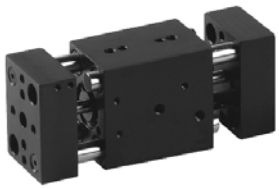

| | | |
|---|---|---|
| Total Grip Force (100 psi @ 1 in) | 82 lbs | 364 N |
| Stroke | 1.00 in | 25.4 mm |
| Weight | 1.3 lbs | 0.59 kg |
| Bore Size | 0.875 in | 22.2 mm |
| Cylinder Volume | 0.600 $in^3$ | 9.8 $cm^3$ |
| Repeatability | ± 0.001 in | ± 0.03 mm |
| Temperature Range* | -30° to 180° F | -35° to 80° C |
| Pressure Range | 40-100 psi | 3-7 bar |
| Filtration Requirement | 40 micron (dry air) | |

* Fluorocarbon seals available for high temperature applications

***Note: See model code and ordering information page for complete part number selection.***

## Loading Information

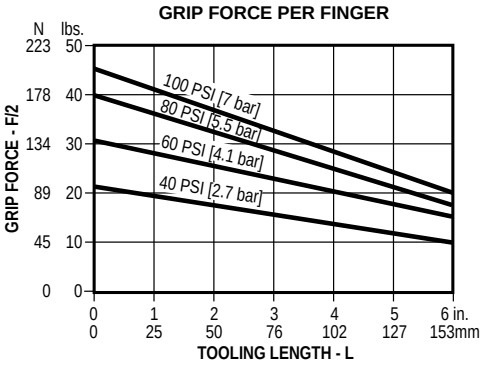


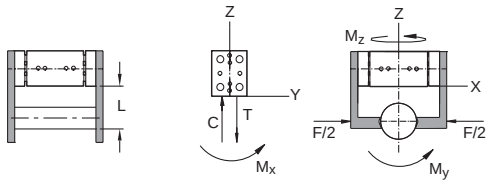


### Maximum Loading Capacity

| Load | Static | | Dynamic | |
|---|---|---|---|---|
| Axial Forces (C,T) | 100 lbs | 445 N | 20 lbs | 89 N |
| Moment (Mx) | 175 in-lbs | 20 Nm | 35 in-lbs | 4 Nm |
| Moment (My) | 250 in-lbs | 28 Nm | 50 in-lbs | 6 Nm |
| Moment (Mz) | 175 in-lbs | 20 Nm | 35 in-lbs | 4 Nm |

## Dimensional Information

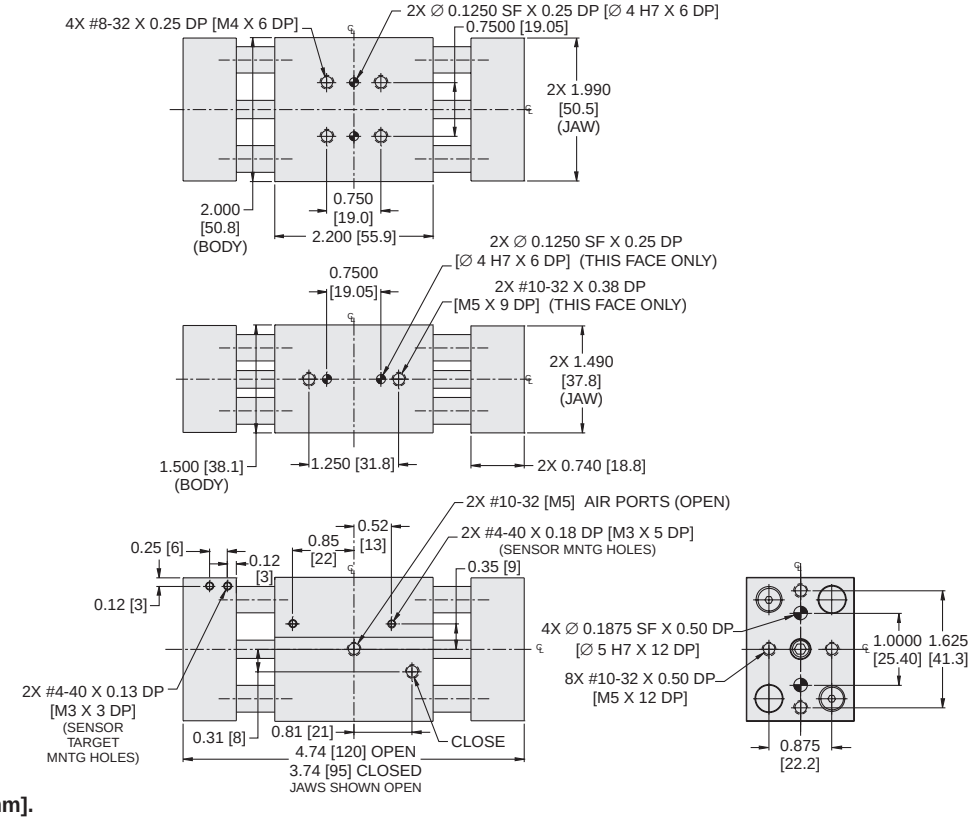


**Dimensions in inch [mm].**





**Parker Hannifin Corporation**
Actuator Division
Wadsworth, Ohio USA

## P5G-HPW-375M2-NS-V

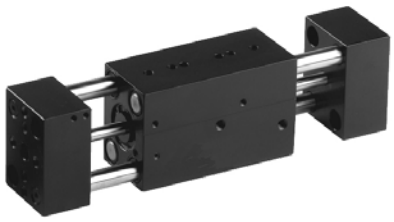

| | | |
|---|---|---|
| Total Grip Force (100 psi @ 1 in) | 82 lbs | 364 N |
| Stroke | 2.00 in | 50.8 mm |
| Weight | 2.0 lbs | 0.91 kg |
| Bore Size | 0.875 in | 22.2 mm |
| Cylinder Volume | 1.200 $in^3$ | 19.7 $cm^3$ |
| Repeatability | ± 0.001 in | ± 0.03 mm |
| Temperature Range* | -30° to 180° F | -35° to 80° C |
| Pressure Range | 40-100 psi | 3-7 bar |
| Filtration Requirement | 40 micron (dry air) | |

* Fluorocarbon seals available for high temperature applications

***Note: See model code and ordering information page for complete part number selection.***

## Loading Information

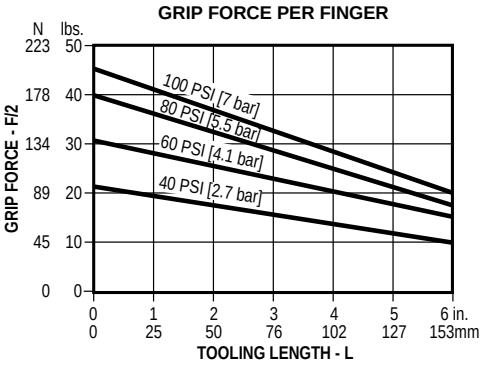


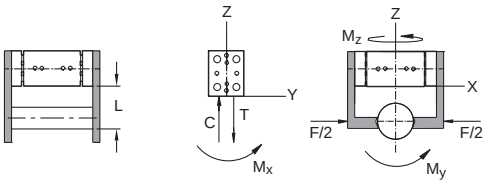


### Maximum Loading Capacity

| Load | Static | | Dynamic | |
|---|---|---|---|---|
| Axial Forces (C,T) | 100 lbs | 445 N | 20 lbs | 89 N |
| Moment (Mx) | 175 in-lbs | 20 Nm | 35 in-lbs | 4 Nm |
| Moment (My) | 250 in-lbs | 28 Nm | 50 in-lbs | 6 Nm |
| Moment (Mz) | 175 in-lbs | 20 Nm | 35 in-lbs | 4 Nm |

## Dimensional Information

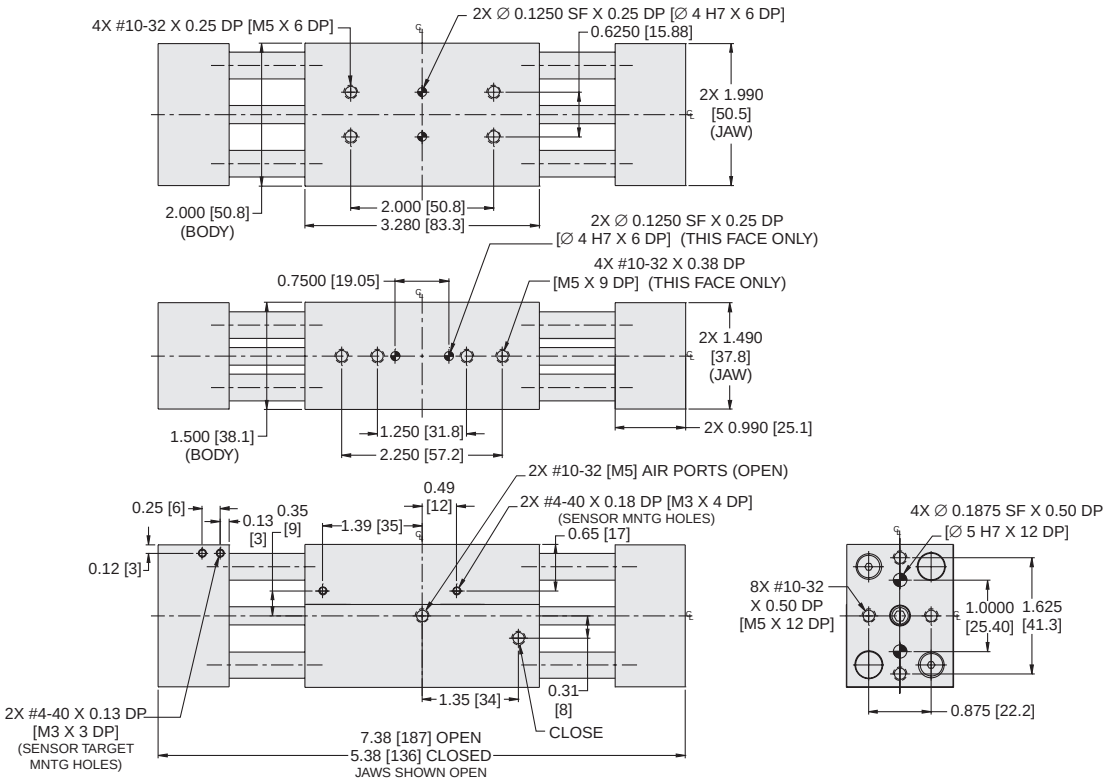


**Dimensions in inch [mm].**



**Parker Hannifin Corporation**
Actuator Division
Wadsworth, Ohio USA

## P5G-HPW-500M1-NS-V

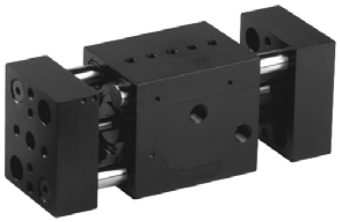

| | | |
|---|---|---|
| Total Grip Force (100 psi @ 1 in) | 142 lbs | 631 N |
| Stroke | 1.50 in | 38.1 mm |
| Weight | 3.0 lbs | 1.4 kg |
| Bore Size | 1.250 in | 31.8 mm |
| Cylinder Volume | 1.800 $in^3$ | 29.5 $cm^3$ |
| Repeatability | ± 0.001 in | ± 0.03 mm |
| Temperature Range* | -30° to 180° F | -35° to 80° C |
| Pressure Range | 40-100 psi | 3-7 bar |
| Filtration Requirement | 40 micron (dry air) | |

* Fluorocarbon seals available for high temperature applications

***Note: See model code and ordering information page for complete part number selection.***

## Loading Information

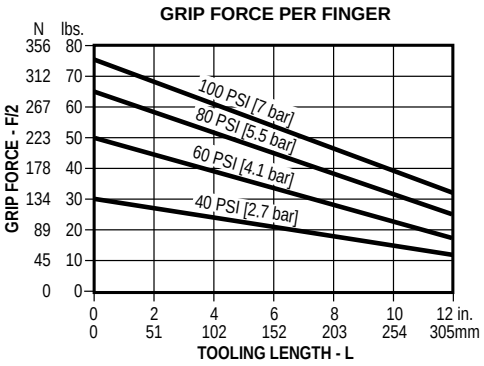


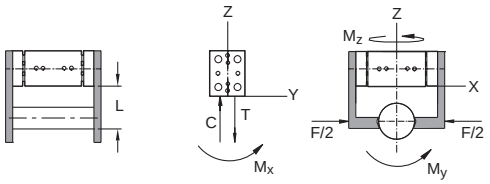


### Maximum Loading Capacity

| Load | Static | | Dynamic | |
|---|---|---|---|---|
| Axial Forces (C,T) | 500 lbs | 2224 N | 50 lbs | 222 N |
| Moment (Mx) | 500 in-lbs | 57 Nm | 50 in-lbs | 6 Nm |
| Moment (My) | 750 in-lbs | 85 Nm | 75 in-lbs | 8 Nm |
| Moment (Mz) | 500 in-lbs | 57 Nm | 50 in-lbs | 6 Nm |

## Dimensional Information

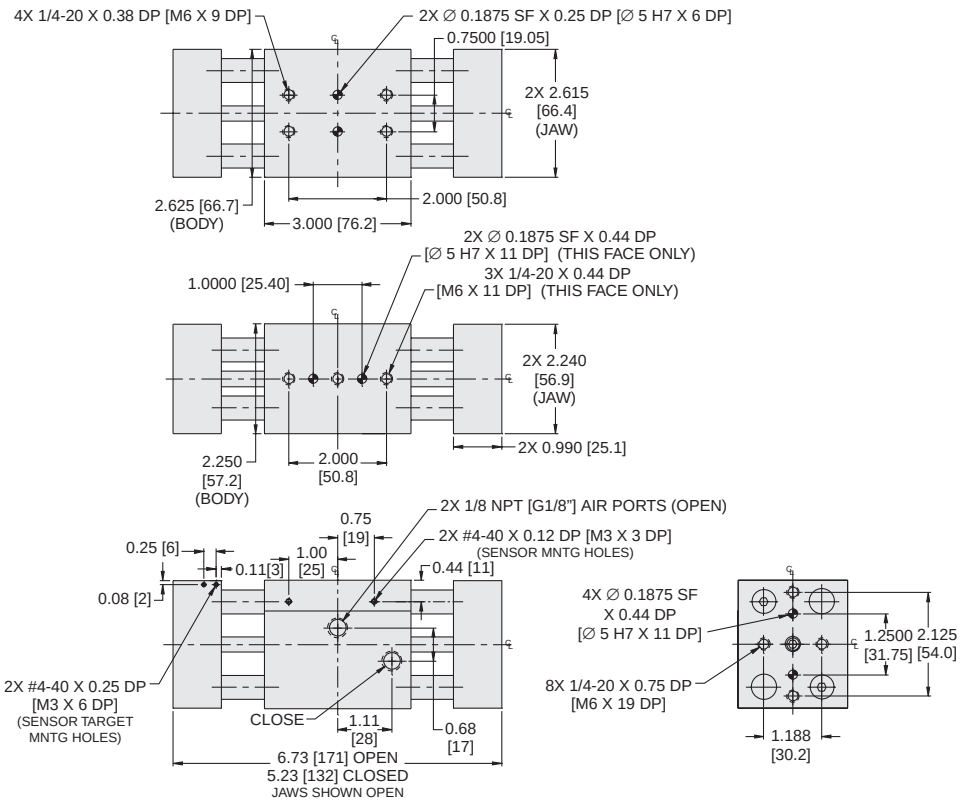


**Dimensions in inch [mm].**





**Parker Hannifin Corporation**
Actuator Division
Wadsworth, Ohio USA

## P5G-HPW-500M2-NS-V

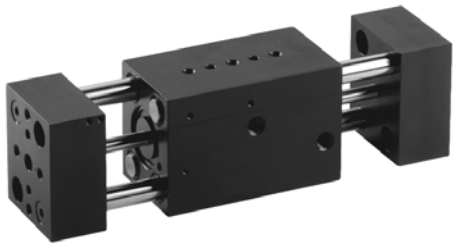

| | | |
|---|---|---|
| Total Grip Force (100 psi @ 1 in) | 142 lbs | 631 N |
| Stroke | 2.50 in | 63.5 mm |
| Weight | 4.0 lbs | 1.8 kg |
| Bore Size | 1.250 in | 31.8 mm |
| Cylinder Volume | 3.000 $in^3$ | 49.2 $cm^3$ |
| Repeatability | ± 0.001 in | ± 0.03 mm |
| Temperature Range* | -30° to 180° F | -35° to 80° C |
| Pressure Range | 40-100 psi | 3-7 bar |
| Filtration Requirement | 40 micron (dry air) | |

* Fluorocarbon seals available for high temperature applications

***Note: See model code and ordering information page for complete part number selection.***

## Loading Information

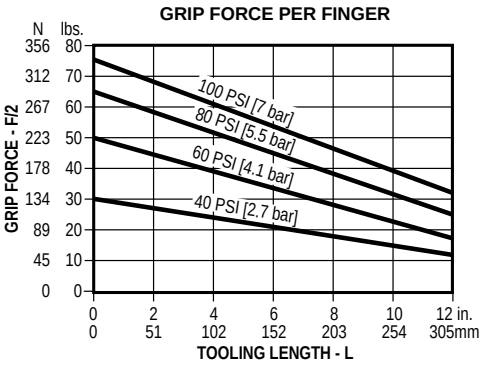


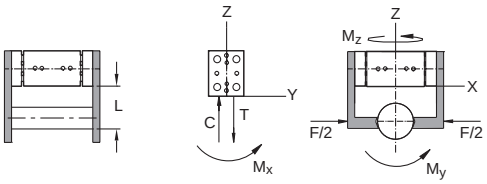


### Maximum Loading Capacity

| Load | Static | | Dynamic | |
|---|---|---|---|---|
| Axial Forces (C,T) | 500 lbs | 2224 N | 50 lbs | 222 N |
| Moment (Mx) | 500 in-lbs | 57 Nm | 50 in-lbs | 6 Nm |
| Moment (My) | 750 in-lbs | 85 Nm | 75 in-lbs | 8 Nm |
| Moment (Mz) | 500 in-lbs | 57 Nm | 50 in-lbs | 6 Nm |

## Dimensional Information

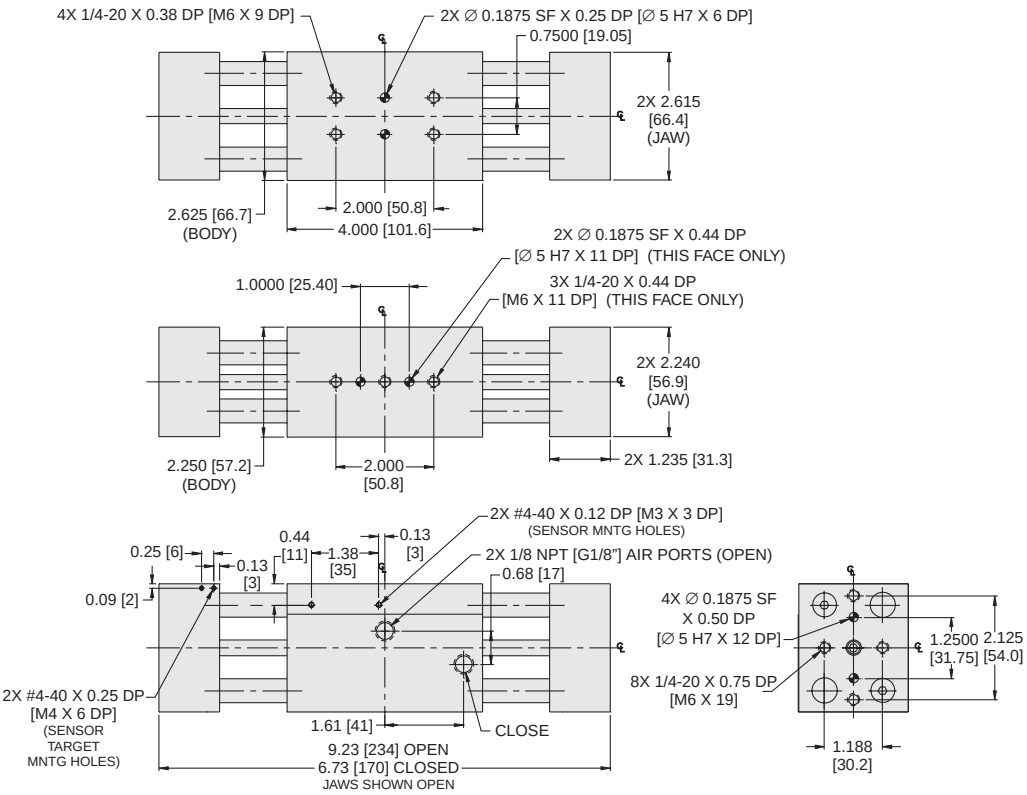


**Dimensions in inch [mm].**



**Parker Hannifin Corporation**
Actuator Division
Wadsworth, Ohio USA

## P5G-HPW-625M1-NS-V

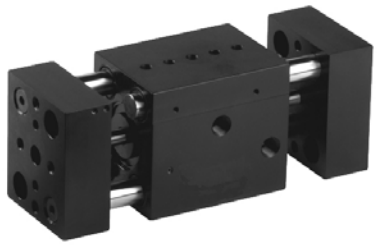

| | | |
|---|---|---|
| Total Grip Force (100 psi @ 1 in) | 234 lbs | 1040 N |
| Stroke | 2.00 in | 50.8 mm |
| Weight | 6.5 lbs | 3.0 kg |
| Bore Size | 1.625 in | 41.3 mm |
| Cylinder Volume | 1.320 $in^3$ | 21.6 $cm^3$ |
| Repeatability | ± 0.001 in | ± 0.03 mm |
| Temperature Range* | -30° to 180° F | -35° to 80° C |
| Pressure Range | 40-100 psi | 3-7 bar |
| Filtration Requirement | 40 micron (dry air) | |

* Fluorocarbon seals available for high temperature applications

***Note: See model code and ordering information page for complete part number selection.***

## Loading Information

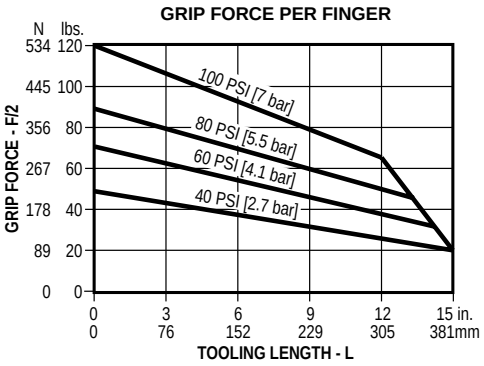


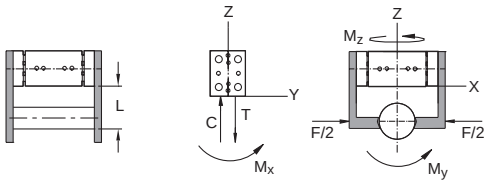


### Maximum Loading Capacity

| Load | Static | | Dynamic | |
|---|---|---|---|---|
| Axial Forces (C,T) | 1200 lbs | 5338 N | 125 lbs | 556 N |
| Moment (Mx) | 1000 in-lbs | 113 Nm | 100 in-lbs | 11 Nm |
| Moment (My) | 1500 in-lbs | 170 Nm | 125 in-lbs | 14 Nm |
| Moment (Mz) | 1000 in-lbs | 113 Nm | 100 in-lbs | 11 Nm |

## Dimensional Information

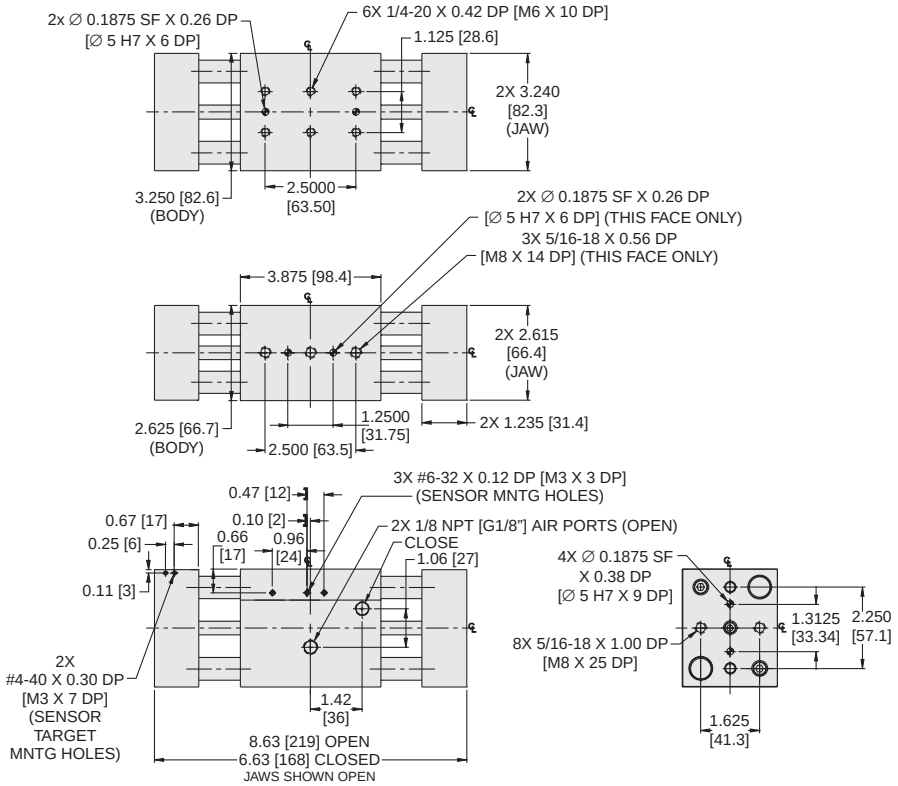


**Dimensions in inch [mm].**





**Parker Hannifin Corporation**
Actuator Division
Wadsworth, Ohio USA

## P5G-HPW-625M2-NS-V

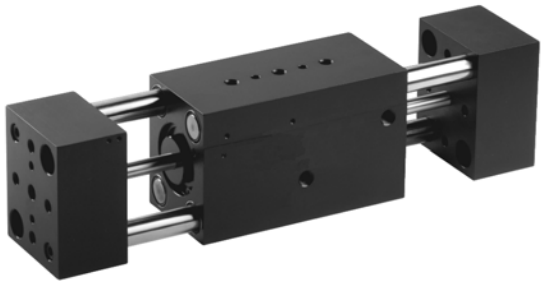

| | | |
|---|---|---|
| Total Grip Force (100 psi @ 1 in) | 234 lbs | 1040 N |
| Stroke | 3.50 in | 88.9 mm |
| Weight | 7.8 lbs | 3.6 kg |
| Bore Size | 1.625 in | 41.3 mm |
| Cylinder Volume | 2.310 $in^3$ | 37.9 $cm^3$ |
| Repeatability | ± 0.001 in | ± 0.03 mm |
| Temperature Range* | -30° to 180° F | -35° to 80° C |
| Pressure Range | 40-100 psi | 3-7 bar |
| Filtration Requirement | 40 micron (dry air) | |

* Fluorocarbon seals available for high temperature applications

***Note: See model code and ordering information page for complete part number selection.***

## Loading Information

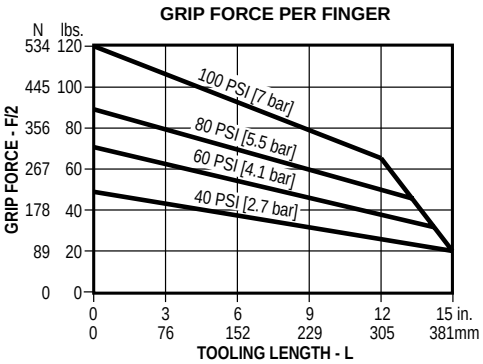


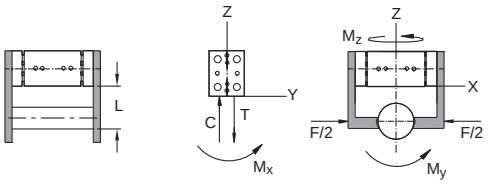


### Maximum Loading Capacity

| Load | Static | | Dynamic | |
|---|---|---|---|---|
| Axial Forces (C,T) | 1200 lbs | 5338 N | 125 lbs | 556 N |
| Moment (Mx) | 1000 in-lbs | 113 Nm | 100 in-lbs | 11 Nm |
| Moment (My) | 1500 in-lbs | 170 Nm | 125 in-lbs | 14 Nm |
| Moment (Mz) | 1000 in-lbs | 113 Nm | 100 in-lbs | 11 Nm |

## Dimensional Information

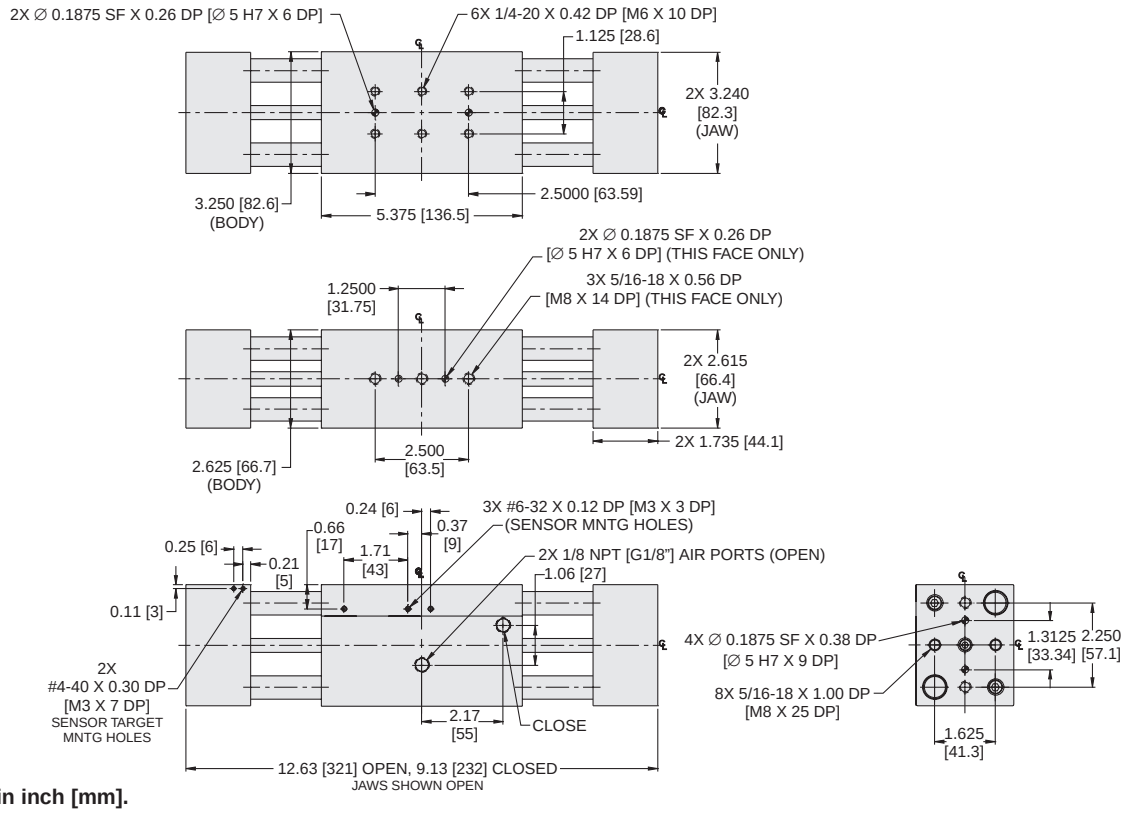


**Dimensions in inch [mm].**



**Parker Hannifin Corporation**
Actuator Division
Wadsworth, Ohio USA

## P5G-HPW-750M-NS-V

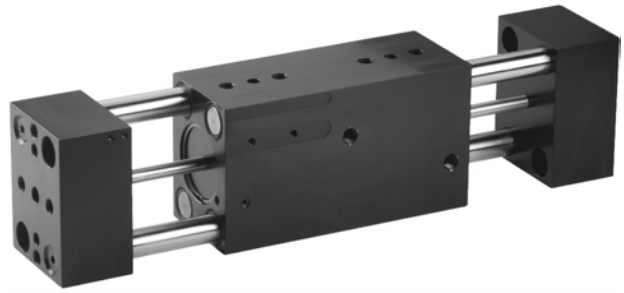

| | | |
|---|---|---|
| Total Grip Force (100 psi @ 1 in) | 450 lbs | 2001 N |
| Stroke | 4.50 in | 114.3 mm |
| Weight | 14 lbs | 6.4 kg |
| Bore Size | 2.000 in | 50.8 mm |
| Cylinder Volume | 14.200 $in^3$ | 232.7 $cm^3$ |
| Repeatability | ± 0.001 in | ± 0.03 mm |
| Temperature Range* | -30° to 180° F | -35° to 80° C |
| Pressure Range | 40-100 psi | 3-7 bar |
| Filtration Requirement | 40 micron (dry air) | |

* Fluorocarbon seals available for high temperature applications

***Note: See model code and ordering information page for complete part number selection.***

## Loading Information

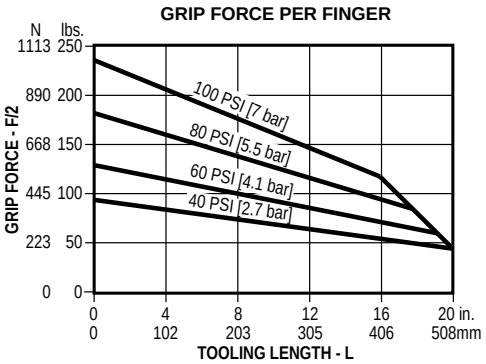


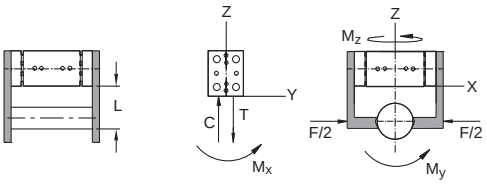


### Maximum Loading Capacity

| Load | Static | | Dynamic | |
|---|---|---|---|---|
| Axial Forces (C,T) | 2500 lbs | 11121 N | 250 lbs | 1112 N |
| Moment (Mx) | 2000 in-lbs | 226 Nm | 200 in-lbs | 22 Nm |
| Moment (My) | 3000 in-lbs | 339 Nm | 250 in-lbs | 28 Nm |
| Moment (Mz) | 2000 in-lbs | 226 Nm | 200 in-lbs | 22 Nm |

## Dimensional Information

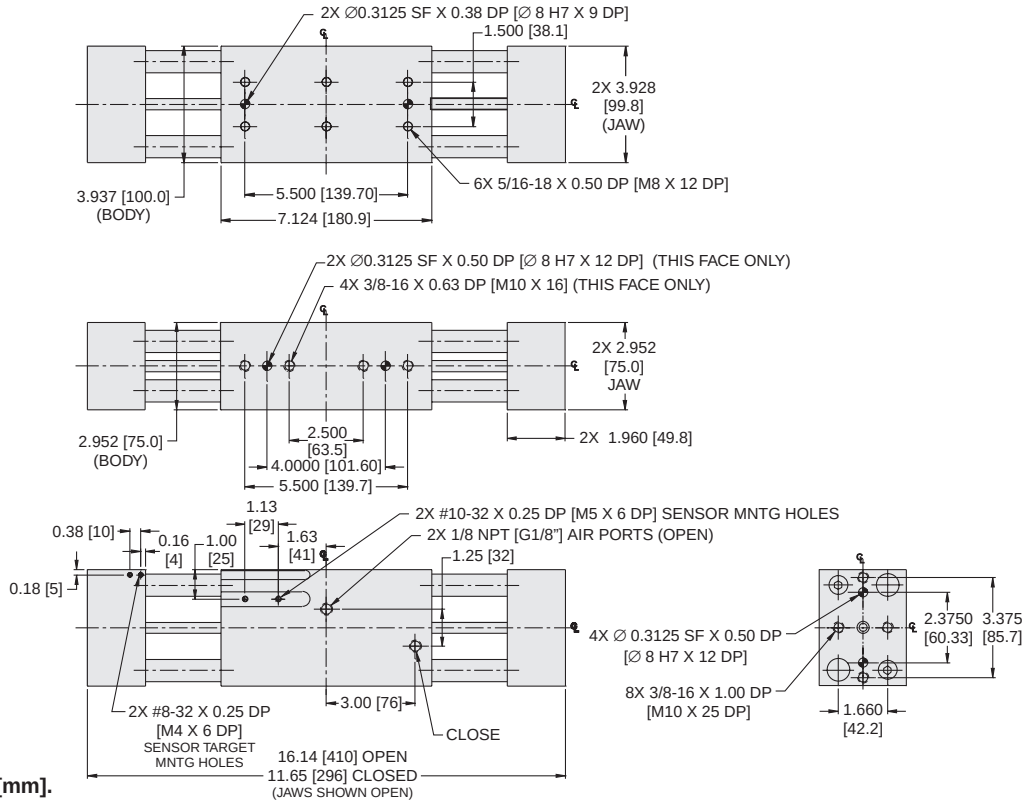


**Dimensions in inch [mm].**





**Parker Hannifin Corporation**
Actuator Division
Wadsworth, Ohio USA

## Metric Option (M)

The standard unit is manufactured with imperial mounting and porting. When this option is specified, the gripper incorporated metric threads and ports.

See dimensional drawings for details.

## Non-synchronous (NS)

The gripper fingers of this series are synchronized in nature. For applications where parts may be off center or randomly placed, the non-synchronous option can be utilized. With this option, both fingers operate independently of each other.

## Fluorocarbon Seals (V)

Standard nitrile seals should be used for general purpose applications with temperatures of -30° to 180°F (-35° to 80°C) Fluorocarbon seals are recommended for high temperature applications up to 250°F (120°C).

| Seal Type | Temperature Range |
|---|---|
| Standard Buna-N | -30° to 180°F (-35° to 80°C) |
| Fluorocarbon | -20° to 250°F (-30° to 120°C) |

## Proximity Sensors

Proximity Sensors provide feedback on the position of the gripper fingers by sensing the metal flag which is attached to the gripper jaw. The sensor bracket is adjustable to provide sensing along the stroke of the gripper finger.

Order sensors, cables and brackets separately. See Sensor section for part numbers and sensor specifications.

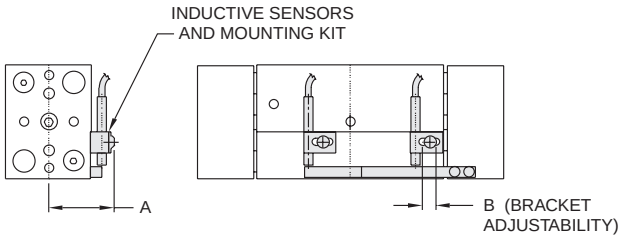


### Dimensions

| Model | A inch (mm) | B inch (mm) |
|---|---|---|
| 250 | 1.04 (26) | 0.24 (6) |
| 375 | 1.15 (29) | 0.24 (6) |
| 500 | 1.53 (39) | 0.24 (6) |
| 625 | 1.94 (49) | 0.26 (7) |
| 750 | 2.28 (58) | 0.36 (9) |

## Model Code and Ordering Information

**P5G – HPW – 375 M – 1 – NS – V**

**Type**
P5G – Pneumatic Gripper

**Series**
HPW

**Size**
250 – 0.625 inch Bore
375 – 0.875 inch Bore
500 – 1.25 inch Bore
625 – 1.625 inch Bore
750 – 2.00 inch Bore

**Design**
Omit – Imperial Design (Standard)
M – Metric Design

**Stroke**
Omit – Standard Stroke (not available for sizes 375, 500 or 625)
Size 250– 0.75 inch
Size 750 – 4.50 inches
1 – Short Stroke (not available for sizes 250 and 750)
Size 375 – 1.00 inch
Size 500 – 1.50 inches
Size 625 – 2.00 inches
2 – Long Stroke (not available for sizes 250 and 750)
Size 375 – 2.00 inches
Size 500 – 2.50 inches
Size 625 – 3.50 inches

**Synchronous**
Omit – Synchronous (Standard)
NS – Non-synchronous Fingers

**Seals**
Omit – Nitrile Seals (Standard)
V – Fluorocarbon Seals

## Seal Kits

| Size | Nitrile Seal Kit | Fluorocarbon Seal Kit |
|---|---|---|
| P5G-HPW-250 | PSK-P5G-HPW-250 | PSK-P5G-HPW-251V |
| P5G-HPW-375-1 | PSK-P5G-HPW-375-1 | PSK-P5G-HPW-375-1V |
| P5G-HPW-375-2 | PSK-P5G-HPW-375-2 | PSK-P5G-HPW-375-2V |
| P5G-HPW-500-1 | PSK-P5G-HPW-500-1 | PSK-P5G-HPW-500-1V |
| P5G-HPW-500-2 | PSK-P5G-HPW-500-2 | PSK-P5G-HPW-500-2V |
| P5G-HPW-625-1 | PSK-P5G-HPW-625-1 | PSK-P5G-HPW-625-1V |
| P5G-HPW-625-2 | PSK-P5G-HPW-625-2 | PSK-P5G-HPW-625-2V |
| P5G-HPW-750 | PSK-P5G-HPW-750 | PSK-P5G-HPW-751V |





**Parker Hannifin Corporation**
Actuator Division
Wadsworth, Ohio USA

## Notes



**Parker Hannifin Corporation**
Actuator Division
Wadsworth, Ohio USA

## Features

**Seals**
Self lubricating, high temperature dynamic seals are standard (Fluorocarbon only)

**Body**
One piece anodized aluminum body

**Contaminant Tolerance**
Sealed design resists internal contamination

**Optional Proximity Sensors**
Read position of jaw. (Sold separately)

**Double Piston Design**
Double piston design provides maximum grip force to size ratrio

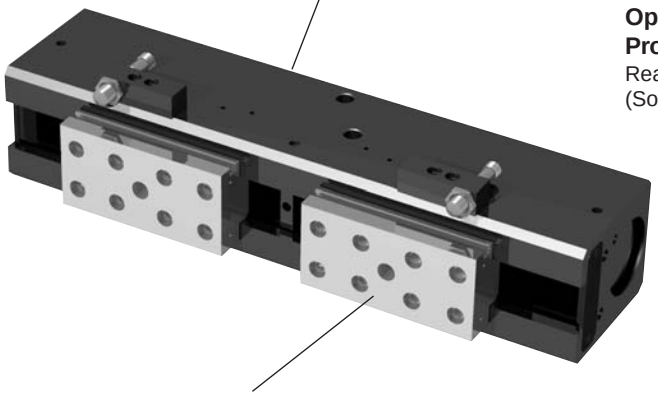

**Oversized Design**
Wide body and long stroke design allow gripping of large, heavy parts.

**Roller Bearing Design**
Jaws are supported by roller bearings allowing for a large load carrying capacity.

**Jaw Configuration**
Large design and multiple mounting holes facilitate easy mounting of end effector tooling.

## Operation

| | |
|---|---|
| Operating Characteristic | Double acting, double piston |
| Gripping Force @ 100 PSI | 600 lbs |
| Stroke Range | 4-6 inches |
| Operating Pressure Range | 20 - 100 PSI (1.5 - 7 bar) |

## Mounting

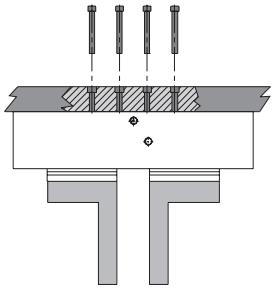

Gripper mounts using tapped holes and slip fit dowel pin holes.

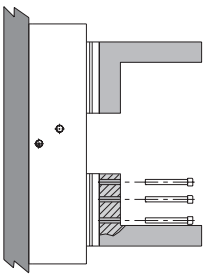

Custom finger tooling mounts using tapped holes and precise tolerancing of fingers.

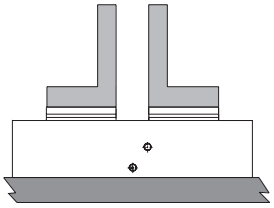

**WARNING!** Use bellows cover to protect internal mechanism from debris.

## Contents

P5G-HPB-24 ..... 114
P5G-HPB-26 ..... 115
Metric Design Option ..... 116
Non-Synchronous Option ..... 116
Sensors ..... 116
Ordering Information ..... 117





**Parker Hannifin Corporation**
Actuator Division
Wadsworth, Ohio USA

## P5G-HPB-24M-NS

| | | |
|---|---|---|
| Total Grip Force (100 psi @ 1 in) | 600 lbs | 2669 N |
| Stroke | 4 in | 101.6 mm |
| Weight | 24 lbs | 11 kg |
| Bore Size | 2.000 in | 50.8 mm |
| Cylinder Volume | 12.5 $in^3$ | 204.8 $cm^3$ |
| Repeatability | ± 0.002 in | ± 0.05 mm |
| Temperature Range | -20º to 300º F | -30º to 150º C |
| Pressure Range | 20-100 psi | 1.4-7 bar |
| Filtration Requirement | 40 micron (dry air) | |

***Note: See model code and ordering information page for complete part number selection.***

## Loading Information

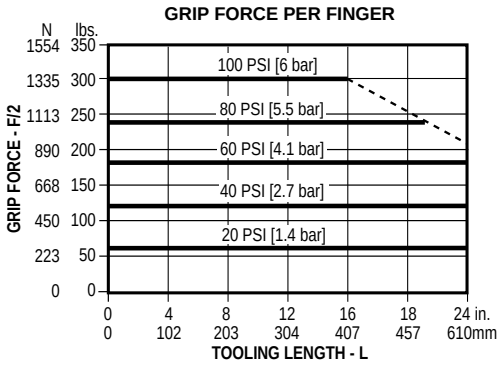


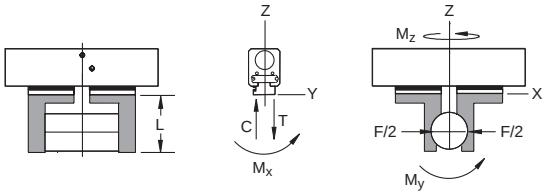


### Maximum Loading Capacity

| Load | Static | | Dynamic | |
|---|---|---|---|---|
| Axial Forces (C,T) | 1500 lbs | 6672 N | 500 lbs | 2224 N |
| Moment (Mx) | 3000 in-lbs | 339 Nm | 750 in-lbs | 84.8 Nm |
| Moment (My) | 3000 in-lbs | 339 Nm | 750 in-lbs | 84.8 Nm |
| Moment (Mz) | 3000 in-lbs | 339 Nm | 750 in-lbs | 84.8 Nm |

## Dimensional Information

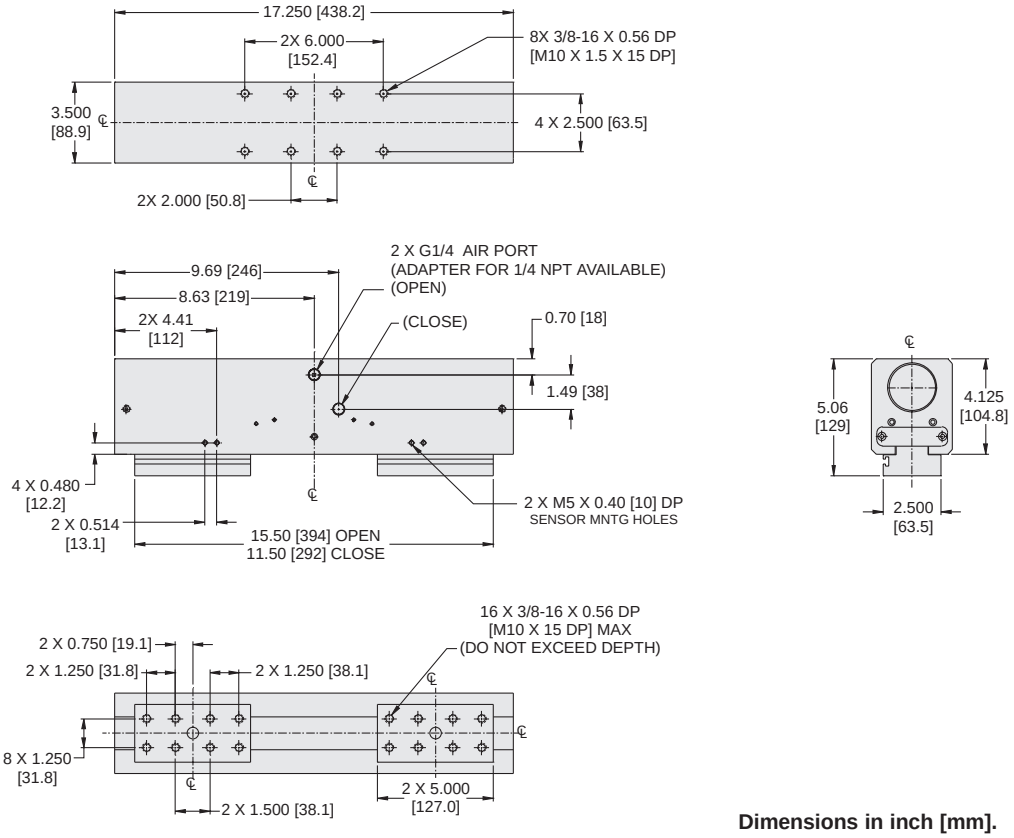


**Dimensions in inch [mm].**



**Parker Hannifin Corporation**
Actuator Division
Wadsworth, Ohio USA

## P5G-HPB-26M-NS

| | | |
|---|---|---|
| Total Grip Force (100 psi @ 1 in) | 600 lbs | 2669 N |
| Stroke | 6 in | 152.4 mm |
| Weight | 32 lbs | 14.55 kg |
| Bore Size | 2.000 in | 50.8 mm |
| Cylinder Volume | 18.8 $in^3$ | 308.1 $cm^3$ |
| Repeatability | ± 0.002 in | ± 0.05 mm |
| Temperature Range | -20° to 300° F | -30° to 150° C |
| Pressure Range | 20-100 psi | 1.4-7 bar |
| Filtration Requirement | 40 micron (dry air) | |

***Note: See model code and ordering information page for complete part number selection.***

## Loading Information

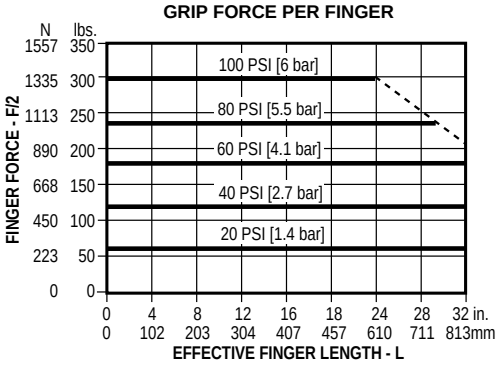


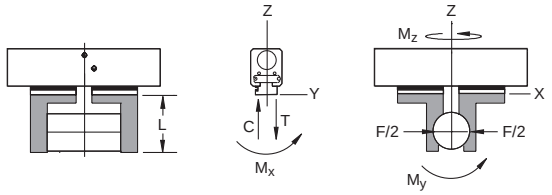


### Maximum Loading Capacity

| | Static | | Dynamic | |
|---|---|---|---|---|
| Axial Forces (C,T) | 2000 lbs | 8896 N | 640 lbs | 2891 N |
| Moment (Mx) | 3500 in-lbs | 396 Nm | 900 in-lbs | 101.7 Nm |
| Moment (My) | 3500 in-lbs | 396 Nm | 900 in-lbs | 101.7 Nm |
| Moment (Mz) | 3500 in-lbs | 396 Nm | 900 in-lbs | 101.7 Nm |

## Dimensional Information

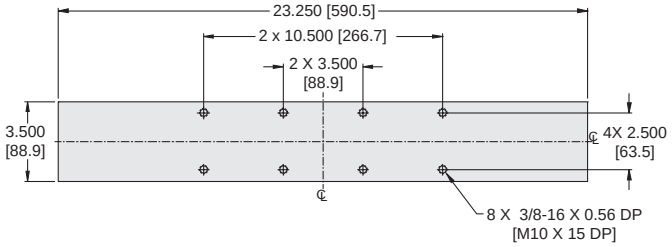


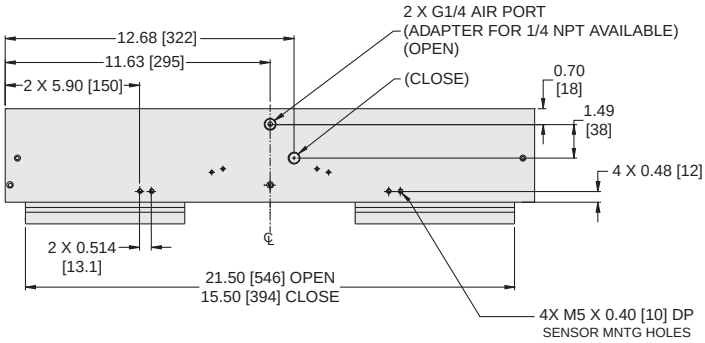


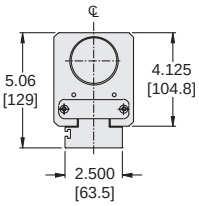


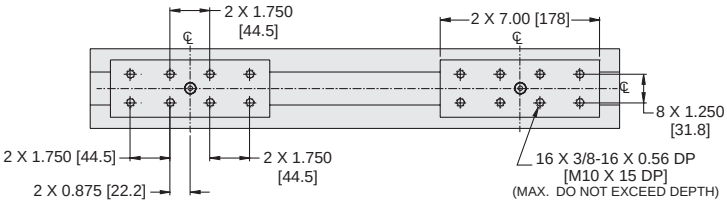


**Dimensions in inch [mm].**





**Parker Hannifin Corporation**
Actuator Division
Wadsworth, Ohio USA

## Metric Design (M)

The standard unit is manufactured with imperial mounting and porting. When metric design option is specified, the gripper incorporates metric threads and ports.

See dimensional drawings for details.

## Non-synchronous (NS)

The gripper fingers of this series are synchronized in nature. For applications where parts may be off center or randomly placed, the non-synchronous option can be utilized. With this option, both fingers operate independently of each other.

## Proximity Sensors

Proximity Sensors provide feedback on the position of the gripper fingers by sensing the metal flag which is attached to the gripper jaw. The sensor bracket is adjustable to provide sensing along the stroke of the gripper finger.

Order sensors, cables and brackets separately. See Sensor section for part numbers and sensor specifications.

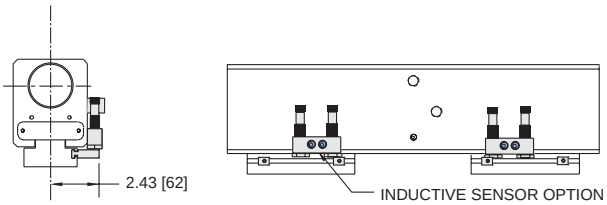

## Model Code and Ordering Information

**P5G – HPB – 24 M – NS**

**Type**
P5G – Pneumatic Gripper

**Series**
HPB

**Size**
24 – 2.00 inch Bore, 6.0 inch Stroke
26 – 2.00 inch Bore, 4.0 inch Stroke

**Design**
Omit – Imperial Design (Standard)
M – Metric Design

**Synchronous**
Omit – Synchronous (Standard)
NS – Non-synchronous Fingers

## Seal Kits

| Size | Fluorocarbon Seal Kit |
|---|---|
| P5G-HPB-24 | PSK-P5G-HPB-24 |
| P5G-HPB-26 | PSK-P5G-HPB-26 |





**Parker Hannifin Corporation**
Actuator Division
Wadsworth, Ohio USA

## Notes



**Parker Hannifin Corporation**
Actuator Division
Wadsworth, Ohio USA

## Features

**Stripper Plate**
Optional stripper plate provides spring loaded part ejection.

**Internal Components**
Jaw components are precision ground for minimal jaw play and hardened for wear resistance and maximum life.

**Optional Hall Effect Sensors**
Read position of piston (Sold separately).
Magnetic piston standard.

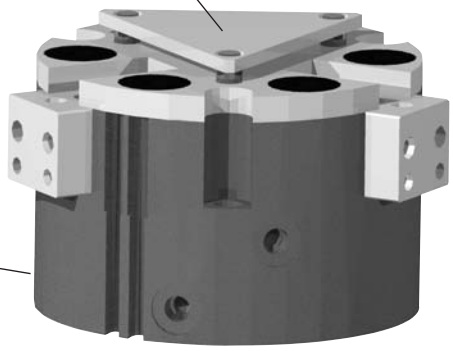

**Body**
One piece hard-coat anodized aluminum body with Teflon® impregnation.

**Contaminant Tolerance**
Sealed design resists internal contamination.

**Seals**
Self lubricating dynamic seals (Nitrile only)

**Wedge Design**
Efficient guided wedge design provides high force to weight ratio. Jaw components are precision ground to minimize play.

## Operation

Operating Characteristic ..... Double acting, 3-jaw wedge design

Gripping Force @ 100 PSI ..... 80 - 2800 lbs

Stroke Range ..... 0.30 to 1.38 inches

Operating Pressure Range ..... 20 - 100 PSI (1.5 - 7 bar)

## Mounting

Gripper can be mounted in any orientation due to sealed housing design.

Gripper mounts from behind using tapped holes and slip fit dowel pin holes. Gripper also mounts through counter bores in the body and slip fit dowel pins.

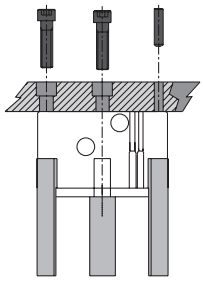

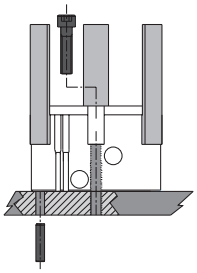

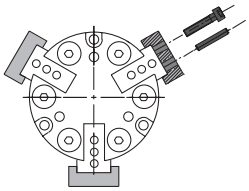

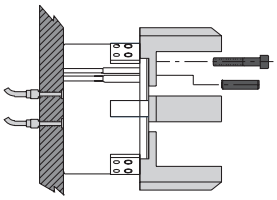

Custom finger tooling mounts to end or bottom of jaws using tapped holes and precise tolerancing of fingers.

## Contents

P5G-HPC-315 ..... 120
P5G-HPC-320 ..... 121
P5G-HPC-331 ..... 122
P5G-HPC-344 ..... 123
P5G-HPC-356 ..... 124
P5G-HPC-368 ..... 125
Metric Design Option ..... 126
Stripper Plate Option ..... 126
Fluorocarbon Seals ..... 126
Sensors ..... 126
Ordering Information ..... 127





**Parker Hannifin Corporation**
Actuator Division
Wadsworth, Ohio USA

# P5G-HPC-315M-SP-V

| | | |
|---|---|---|
| Total Grip Force (100 psi @ 1 in) | 80 lbs | 356 N |
| Stroke | 0.30 in | 7.6 mm |
| Weight | 0.53 lbs | 0.24 kg |
| Bore Size | 1.250 in | 31.8 mm |
| Cylinder Volume | 1.040 $in^3$ | 17.0 $cm^3$ |
| Repeatability | ± 0.001 in | ± 0.03 mm |
| Temperature Range* | -30° to 180° F | -35° to 80° C |
| Pressure Range | 20-100 psi | 1.5-7 bar |
| Filtration Requirement | 40 micron (dry air) | |

* Fluorocarbon seals available for high temperature applications

***Note: See model code and ordering information page for complete part number selection.***

## Loading Information

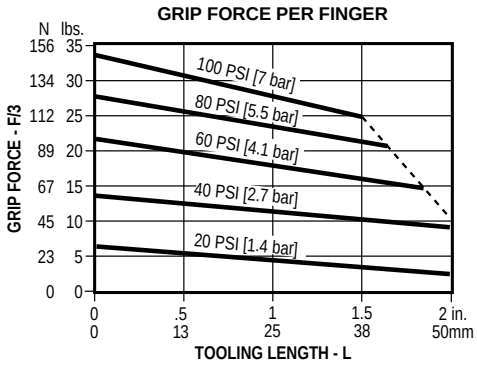


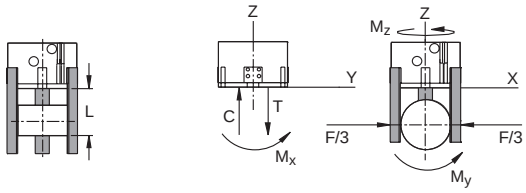


### Maximum Loading Capacity

| Load | Static | | Dynamic | |
|---|---|---|---|---|
| Axial Forces (C,T) | 300 lbs | 1334 N | 100 lbs | 445 N |
| Moment (Mx) | 250 in-lbs | 28 Nm | 75 in-lbs | 8 Nm |
| Moment (My) | 250 in-lbs | 28 Nm | 75 in-lbs | 8 Nm |
| Moment (Mz) | 150 in-lbs | 17 Nm | 50 in-lbs | 6 Nm |

## Dimensional Information

**Dimensions in inch [mm].**

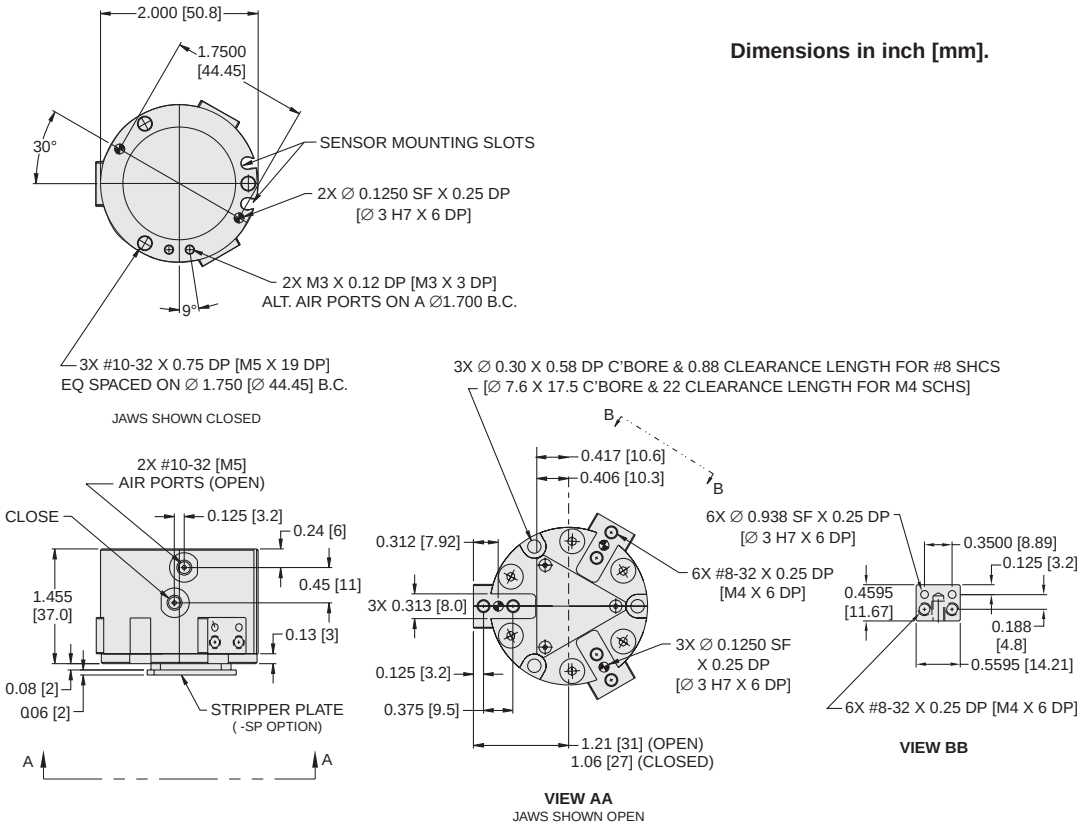




**Parker Hannifin Corporation**
Actuator Division
Wadsworth, Ohio USA

# P5G-HPC-320M-SP-V

| | | |
|---|---|---|
| Total Grip Force (100 psi @ 1 in) | 240 lbs | 1068 N |
| Stroke | 0.40 in | 10.2 mm |
| Weight | 1.0 lbs | 0.45 kg |
| Bore Size | 2.000 in | 50.8 mm |
| Cylinder Volume | 0.690 $in^3$ | 11.3 $cm^3$ |
| Repeatability | ± 0.001 in | ± 0.03 mm |
| Temperature Range* | -30° to 180° F | -35° to 80° C |
| Pressure Range | 20-100 psi | 1.5-7 bar |
| Filtration Requirement | 40 micron (dry air) | |

* Fluorocarbon seals available for high temperature applications

***Note: See model code and ordering information page for complete part number selection.***

## Loading Information

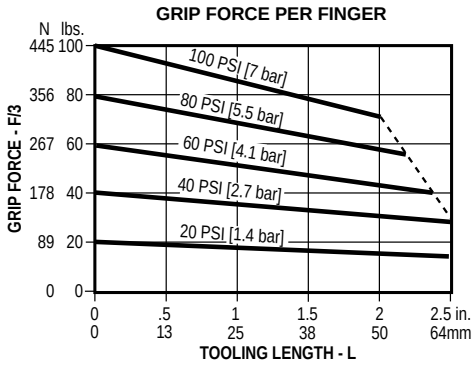


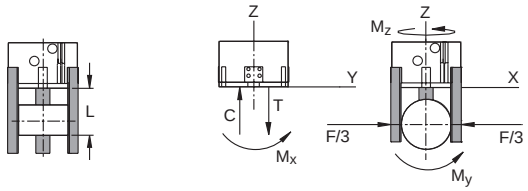


### Maximum Loading Capacity

| Load | Static | | Dynamic | |
|---|---|---|---|---|
| Axial Forces (C,T) | 750 lbs | 3336 N | 250 lbs | 1112 N |
| Moment (Mx) | 750 in-lbs | 85 Nm | 255 in-lbs | 28 Nm |
| Moment (My) | 750 in-lbs | 85 Nm | 255 in-lbs | 28 Nm |
| Moment (Mz) | 350 in-lbs | 40 Nm | 100 in-lbs | 11 Nm |

## Dimensional Information

**Dimensions in inch [mm].**

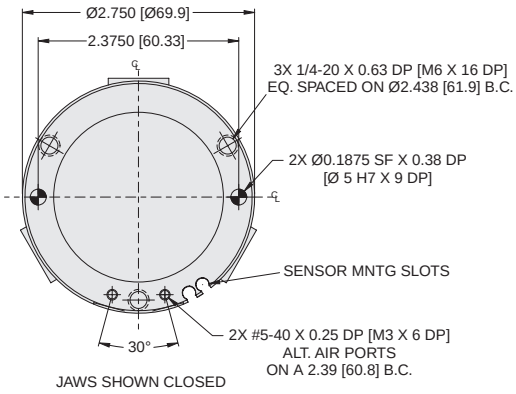


JAWS SHOWN CLOSED

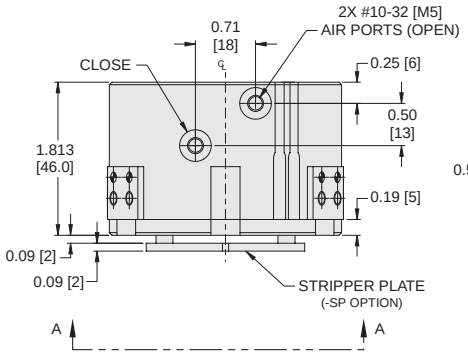


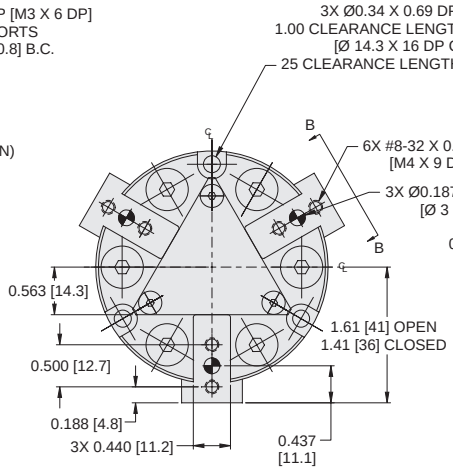


**VIEW AA**
JAWS SHOWN OPEN

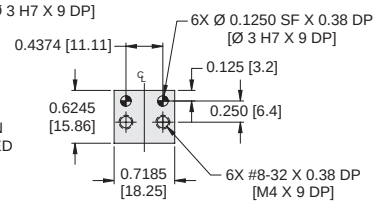


**VIEW BB**





**Parker Hannifin Corporation**
Actuator Division
Wadsworth, Ohio USA

# P5G-HPC-331M-SP-V

| | | |
|---|---|---|
| Total Grip Force (100 psi @ 1 in) | 675 lbs | 3002 N |
| Stroke | 0.62 in | 15.7 mm |
| Weight | 3.0 lbs | 1.4 kg |
| Bore Size | 2.750 in | 69.8 mm |
| Cylinder Volume | 2.815 $in^3$ | 46.1$cm^3$ |
| Repeatability | ± 0.001 in | ± 0.03 mm |
| Temperature Range* | -30° to 180° F | -35° to 80° C |
| Pressure Range | 20-100 psi | 1.5-7 bar |
| Filtration Requirement | 40 micron (dry air) | |

* Fluorocarbon seals available for high temperature applications

***Note: See model code and ordering information page for complete part number selection.***

## Loading Information

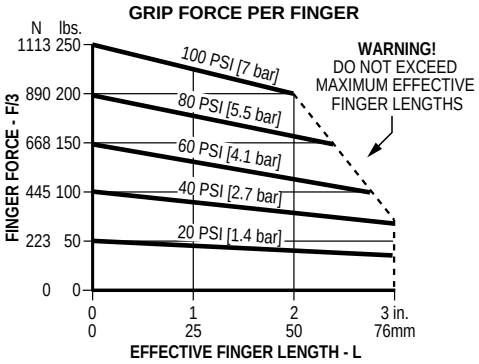


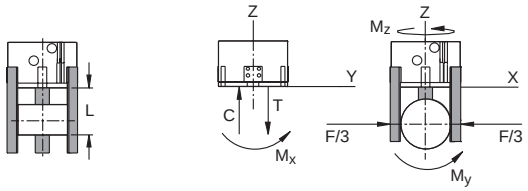


### Maximum Loading Capacity

| | Static | | Dynamic | |
|---|---|---|---|---|
| Axial Forces (C,T) | 1250 lbs | 5560 N | 400 lbs | 1779 N |
| Moment (Mx) | 1250 in-lbs | 141 Nm | 400 in-lbs | 45 Nm |
| Moment (My) | 1250 in-lbs | 141 Nm | 400 in-lbs | 45 Nm |
| Moment (Mz) | 1000 in-lbs | 113 Nm | 300 in-lbs | 34 Nm |

## Dimensional Information

**Dimensions in inch [mm].**

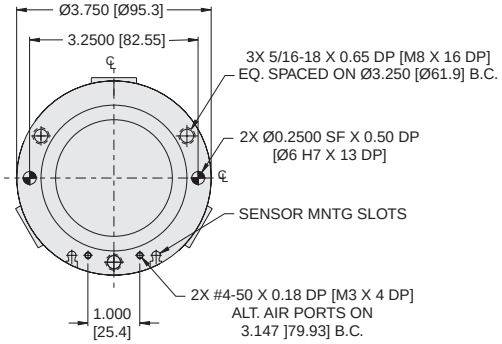


JAWS SHOWN CLOSED

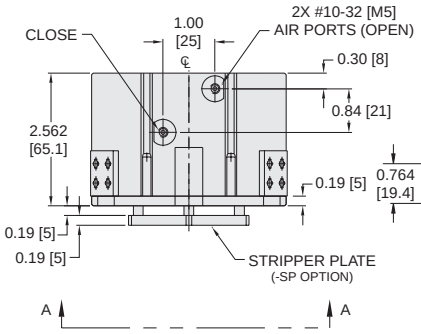


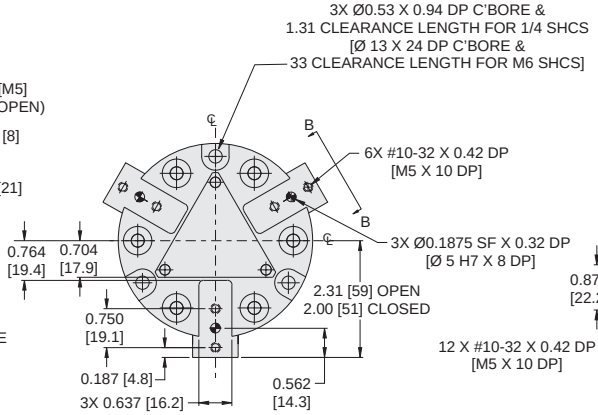


**VIEW AA**
JAWS SHOWN OPEN

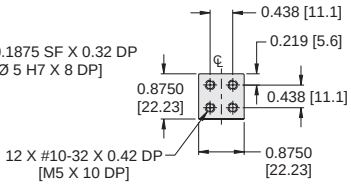


**VIEW BB**



**Parker Hannifin Corporation**
Actuator Division
Wadsworth, Ohio USA

# P5G-HPC-344M-SP-V

| | | |
|---|---|---|
| Total Grip Force (100 psi @ 1 in) | 825 lbs | 3670 N |
| Stroke | 0.88 in | 22.2 mm |
| Weight | 6.0 lbs | 2.7 kg |
| Bore Size | 3.500 in | 88.9 mm |
| Cylinder Volume | 6.200 $in^3$ | 101.6 $cm^3$ |
| Repeatability | ± 0.001 in | ± 0.03 mm |
| Temperature Range* | -30° to 180° F | -35° to 80° C |
| Pressure Range | 20-100 psi | 1.5-7 bar |
| Filtration Requirement | 40 micron (dry air) | |

* Fluorocarbon seals available for high temperature applications

***Note: See model code and ordering information page for complete part number selection.***

## Loading Information

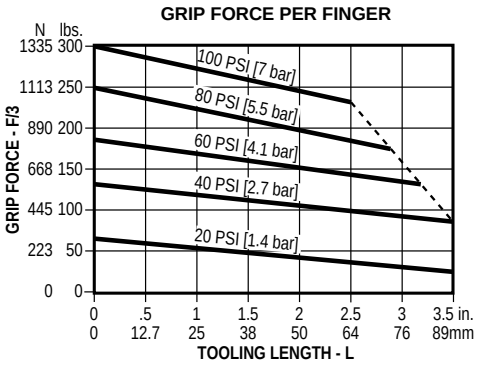


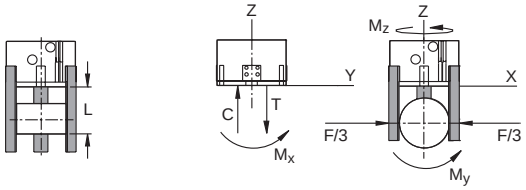


### Maximum Loading Capacity

| | | Static | | Dynamic |
|---|---|---|---|---|
| Axial Forces (C and T) | 2000 lbs | 8896 N | 750 lbs | 3336 N |
| Moment (Mx) | 2000 in-lbs | 226 Nm | 750 in-lbs | 85 Nm |
| Moment (My) | 2000 in-lbs | 226 Nm | 750 in-lbs | 85 Nm |
| Moment (Mz) | 1500 in-lbs | 170 Nm | 500 in-lbs | 57 Nm |

## Dimensional Information

**Dimensions in inch [mm].**

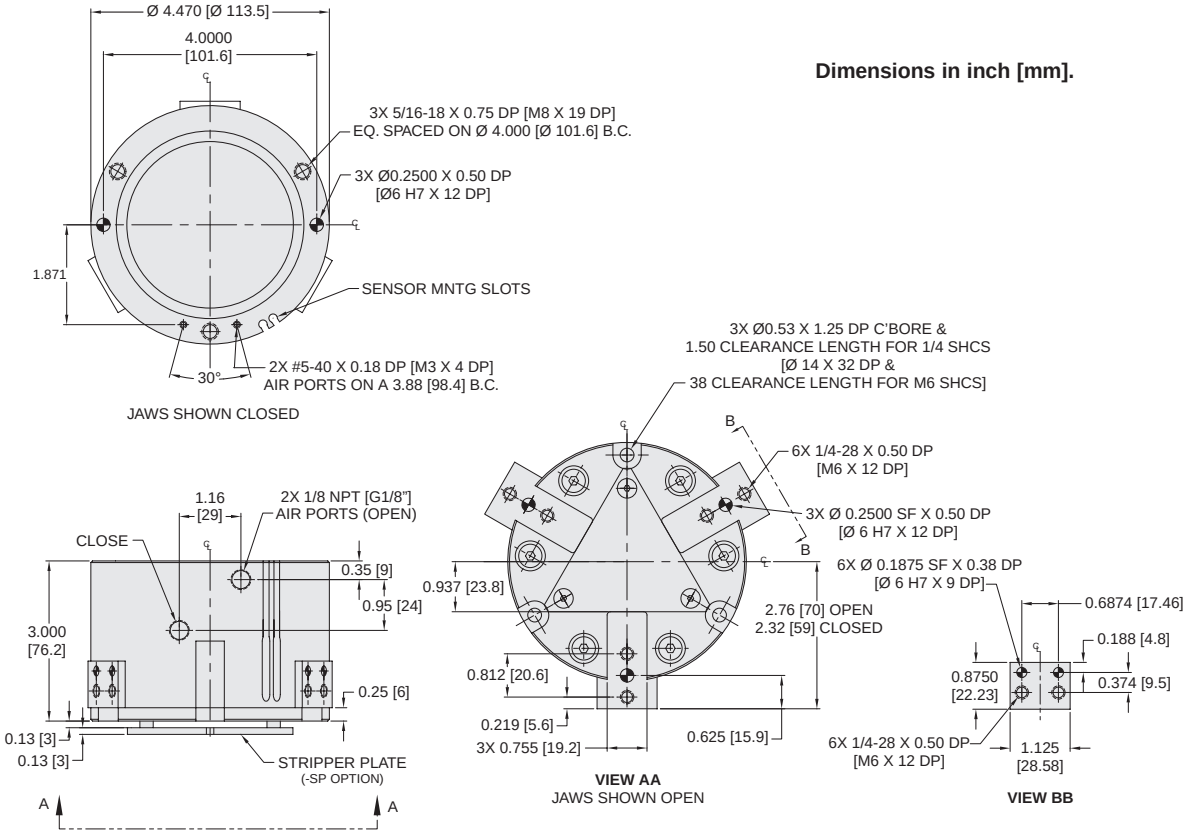






**Parker Hannifin Corporation**
Actuator Division
Wadsworth, Ohio USA

## P5G-HPC-356M-SP-V

| | | |
|---|---|---|
| Total Grip Force (100 psi @ 1 in) | 1357 lbs | 6036 N |
| Stroke | 1.12 in | 28.4 mm |
| Weight | 9.75 lbs | 4.4 kg |
| Bore Size | 4.500 in | 114.3 mm |
| Cylinder Volume | 11.674 $in^3$ | 191.3$cm^3$ |
| Repeatability | ± 0.001 in | ± 0.03 mm |
| Temperature Range* | -30° to 180° F | -35° to 80° C |
| Pressure Range | 20-100 psi | 1.5-7 bar |
| Filtration Requirement | 40 micron (dry air) | |

* Fluorocarbon seals available for high temperature applications

***Note: See model code and ordering information page for complete part number selection.***

## Loading Information

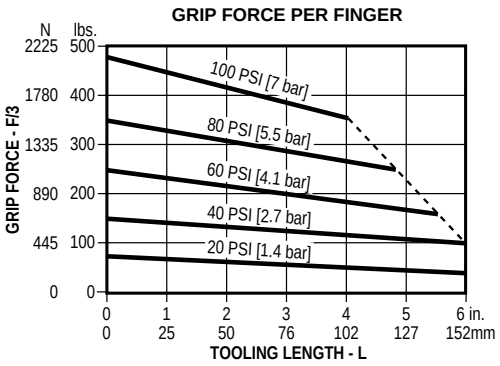


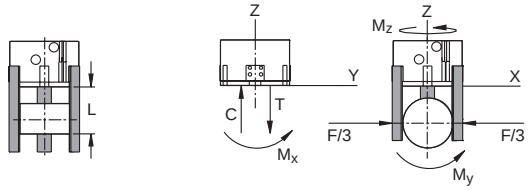


### Maximum Loading Capacity

| | Static | | Dynamic | |
|---|---|---|---|---|
| Axial Forces (C,T) | 3000 lbs | 13345 N | 1000 lbs | 4448 N |
| Moment (Mx) | 4000 in-lbs | 452 Nm | 1000 in-lbs | 113 Nm |
| Moment (My) | 4000 in-lbs | 452 Nm | 1000 in-lbs | 113 Nm |
| Moment (Mz) | 3000 in-lbs | 339 Nm | 750 in-lbs | 85 Nm |

## Dimensional Information

**Dimensions in inch [mm].**

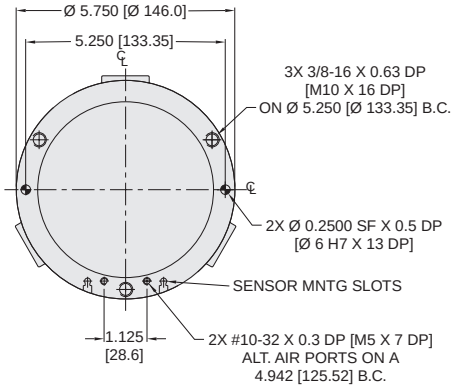


JAWS SHOWN CLOSED

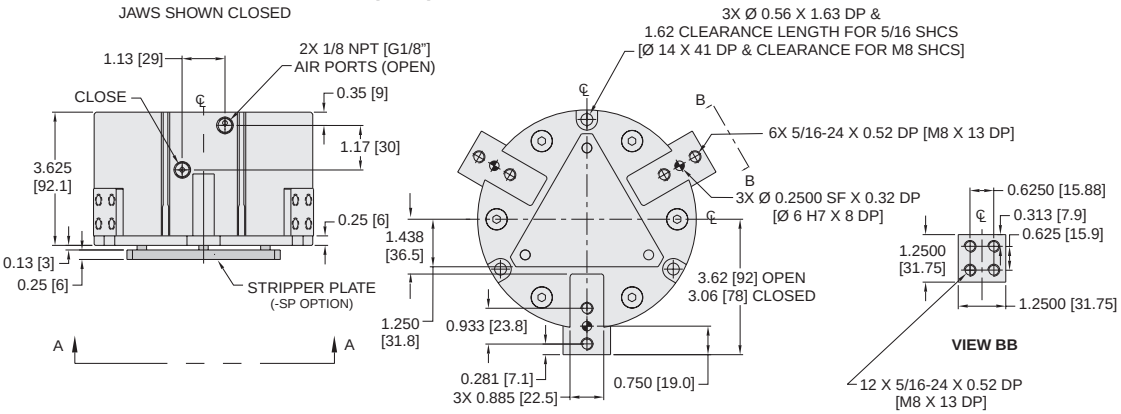




**Parker Hannifin Corporation**
Actuator Division
Wadsworth, Ohio USA

## P5G-HPC-368M-SP-V

| | | |
|---|---|---|
| Total Grip Force (100 psi @ 1 in) | 2800 lbs | 12455 N |
| Stroke | 1.38 in | 34.9 mm |
| Weight | 16 lbs | 7.3 kg |
| Bore Size | 5.250 in | 133.3 mm |
| Cylinder Volume | 23.000 $in^3$ | 376.9 $cm^3$ |
| Repeatability | ± 0.001 in | ± 0.03 mm |
| Temperature Range* | -30° to 180° F | -35° to 80° C |
| Pressure Range | 20-100 psi | 1.5-7 bar |
| Filtration Requirement | 40 micron (dry air) | |

* Fluorocarbon seals available for high temperature applications

***Note: See model code and ordering information page for complete part number selection.***

## Loading Information

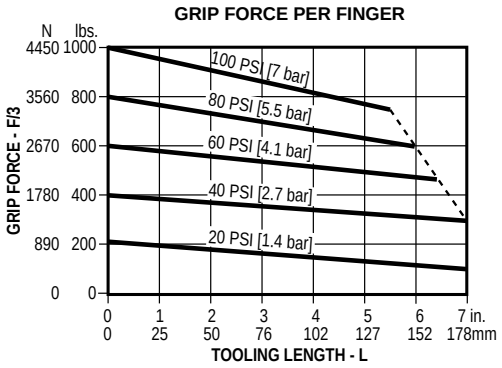


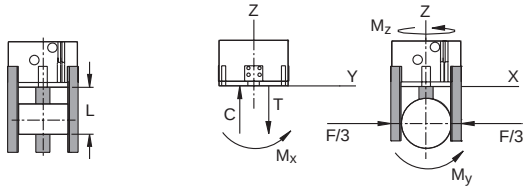


### Maximum Loading Capacity

| | Static | | Dynamic | |
|---|---|---|---|---|
| Axial Forces (C and T) | 5000 lbs | 22241 N | 1500 lbs | 6672 N |
| Moment (Mx) | 7000 in-lbs | 791 Nm | 1500 in-lbs | 170 Nm |
| Moment (My) | 7000 in-lbs | 791 Nm | 1500 in-lbs | 170 Nm |
| Moment (Mz) | 5000 in-lbs | 565 Nm | 1000 in-lbs | 113 Nm |

## Dimensional Information

**Dimensions in inch [mm].**

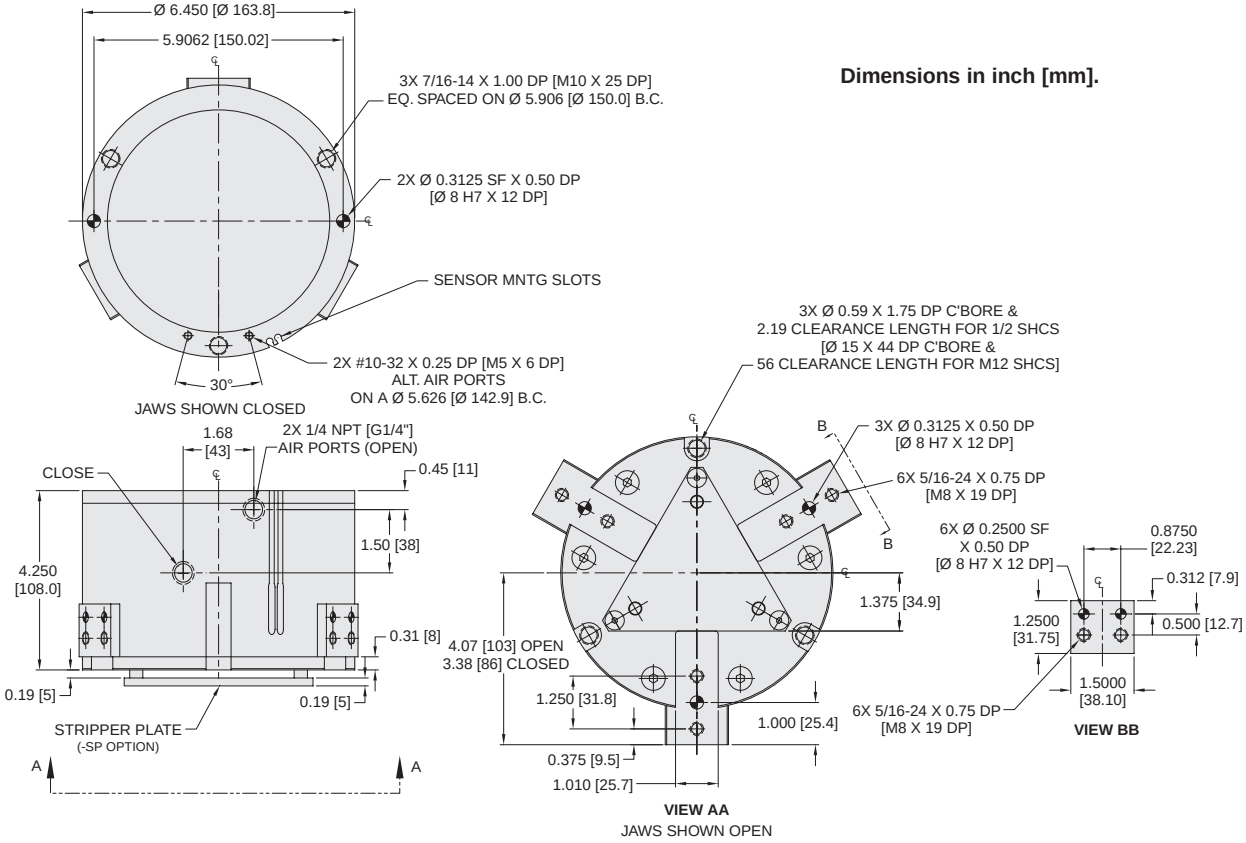






**Parker Hannifin Corporation**
Actuator Division
Wadsworth, Ohio USA

## Metric Design (M)

The standard unit is manufactured with imperial mounting and porting. When metric design option is specified, the gripper incorporates metric threads and ports.

See dimensional drawings for details.

## Stripper Plate (SP)

Spring loaded stripper plate can be used in high speed applications to "eject" parts from the gripper fingers.

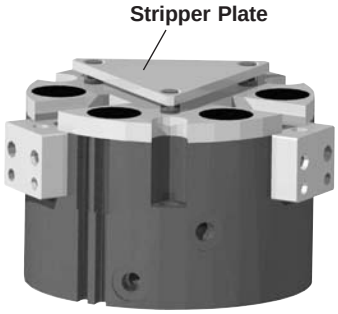


## Fluorocarbon Seals (V)

Standard nitrile seals should be used for general purpose applications with temperatures of -30° to 180°F (-35° to 80°C) Fluorocarbon seals are recommended for high temperature applications up to 250°F (120°C).

| Seal Type | Temperature Range |
|---|---|
| Standard Buna-N | -30° to 180°F (-35° to 80°C) |
| Fluorocarbon | -20° to 250°F (-30° to 120°C) |

## Hall Effect Sensors

Hall effect sensors provide feedback to the position of the gripper fingers by sensing a magnet within the piston. Sensors mount in the sensor mounting grooves in the gripper body and are adjustable to sense along the full travel of the piston.

Order sensors and cables separately. See Sensor section for part numbers and sensor specifications.

## Model Code and Ordering Information

**P5G – HPC – 315 M – SP – V**

**Type**
P5G – Pneumatic Gripper

**Series**
HPC

**Size**
315 – 1,25 inch Bore, 0.30 inch Stroke
320 – 2.00 inch Bore, 0.40 inch Stroke
331 – 2.75 inch Bore, 0.62 inch Stroke
344 – 3.50 inch Bore, 0.88 inch Stroke
356 – 4.50 inch Bore, 1.12 inch Stroke
368 – 5.25 inch Bore, 1.38 inch Stroke

**Design**
Omit – Imperial Design (Standard)
M – Metric Design

**Stripper Plate**
Omit – No Stripper Plate (Standard)
SP – Stripper Plate Option

**Seals**
Omit – Nitrile Seals (Standard)
V – Fluorocarbon Seals

## Seal Kits

| Size | Nitrile Seal Kit | Fluorocarbon Seal Kit |
|---|---|---|
| P5G-HPC-315 | PSK-P5G-HPC-315 | PSK-P5G-HPC-315V |
| P5G-HPC-320 | PSK-P5G-HPC-320 | PSK-P5G-HPC-320V |
| P5G-HPC-331 | PSK-P5G-HPC-331 | PSK-P5G-HPC-331V |
| P5G-HPC-344 | PSK-P5G-HPC-344 | PSK-P5G-HPC-344V |
| P5G-HPC-356 | PSK-P5G-HPC-356 | PSK-P5G-HPC-356V |
| P5G-HPC-368 | PSK-P5G-HPC-368 | PSK-P5G-HPC-368V |





**Parker Hannifin Corporation**
Actuator Division
Wadsworth, Ohio USA

## Notes



**Parker Hannifin Corporation**
Actuator Division
Wadsworth, Ohio USA

# Contents


| | | | |
|---|---|---|---|
| GVC Series | | 30° Miniature, Cross Roller Bearing | 30° Angle |
| GAA Series | | 30° Double Acting, Linkage Design | 30° Angle |
| P5G-HA Series | | 30° Cam Driven | 30° Angle |
| P5G-AA Series | | 30° Automation | 30° Angle |
| P5G-RK Series | | 30° Precision | 30° Angle |
| P5G-HA Series | | 12° Locking, Linkage Design | 12° Locking |
| 3H2 Series | | 30° High Force | High Force |
| GVH Series | | 180° Miniature | 180° Wide Angle |
| GAW Series | | 180°Double Acting, Linkage Design | 180° Wide Angle |
| P5G-AW Series | | 180° Automation | 180° Wide Angle |
| P5G-RB Series | | 180° Precision | 180° Wide Angle |






**Parker Hannifin Corporation**
Actuator Division
Wadsworth, Ohio USA

## Notes



**Parker Hannifin Corporation**
Actuator Division
Wadsworth, Ohio USA

## Features

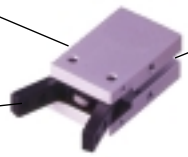

**Body**
One piece anodized aluminum body.

**Sensors**
Sensor grooves allow for easy installation, adjustment of Hall effect sensor. Magnetic piston is standard.

**Jaws**
Made from high strength alloy steel for maximum life and rigidity.

**Seals**
Self lubricating dynamic seals
(Nitrile only)

## Operation

Operating Characteristic ..... Double acting
Gripping Force @ 100 PSI ..... 5 - 160 N (1.8 - 36 lbs)
Stroke Range ..... -10° to +30°
Operating Pressure Range ..... 14 - 100 PSI (1 - 7 bar)

### Not recommended for applications containing:

- Dirt or grit
- Machining chips
- Environments with loose particulate
- Mechanism lubricant that could cause contamination

## Mounting

Gripper can be mounted on three faces and located with center pilot diameter for accuracy.

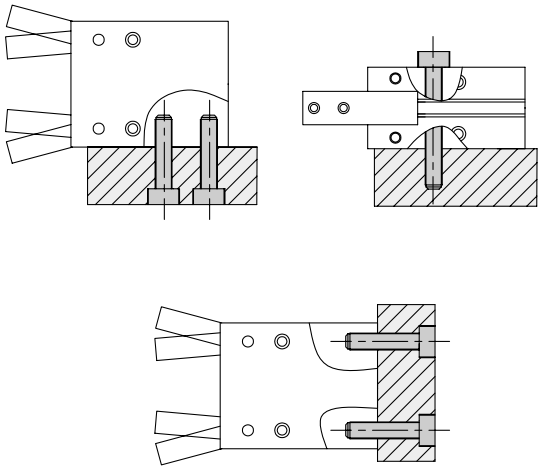

**Warning!** Protect drive and bearing mechanism from falling debris when mounted with fingers up.

## Contents

GVC-8C ..... 132
GVC-10C ..... 133
GVC-16C ..... 134
GVC-20C ..... 135
GVC-25C ..... 136
Spring Assist Option ..... 137
Ordering Information ..... 137



**Parker Hannifin Corporation**
Actuator Division
Wadsworth, Ohio USA

# GVC-8C

| | | |
|---|---|---|
| Total Grip Force (0.7 Mpa @ 25 mm) | 1.25 lbs | 5.6 N |
| Stroke (Degree) | -10 to +30 | |
| Weight | 0.05 lbs | 0.023 kg |
| Bore Size | 0.31 in | 8 mm |
| Cylinder Volume | 0.004 $in^3$ | 0.07 $cm^3$ |
| Repeatability | ± 0.0004 in | ± 0.01 mm |
| Temperature Range* | 41° to 140° F | 5° to 60° C |
| Pressure Range | 31.9-101.5 psi | 2.2-7 bar |
| Filtration Requirement | 40 micron (dry air) | |

* Fluorocarbon seals available for high temperature applications

***Note: See model code and ordering information page for complete part number selection.***

## Loading Information

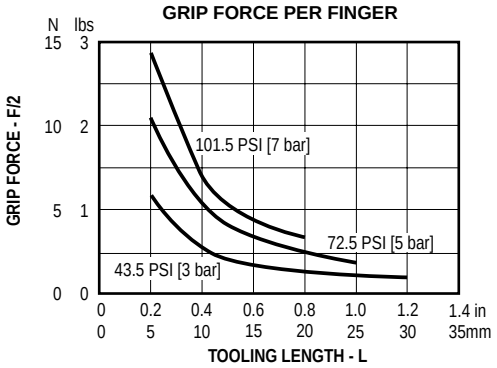


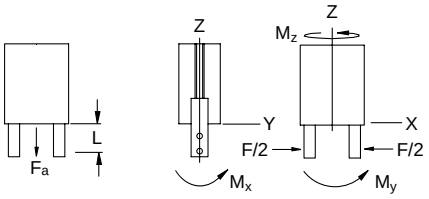


### Maximum Loading Capacity

| Loading Capacity | Static | |
|---|---|---|
| Axial Forces (Fa) | 2.9 lbs | 13.3 N |
| Moment (Mx) | 6.2 in-lb | 0.7 Nm |
| Moment (My) | 1.8 in-lb | 0.2 Nm |
| Moment (Mz) | 5.3 in-lb | 0.6 Nm |

## Dimensional Information

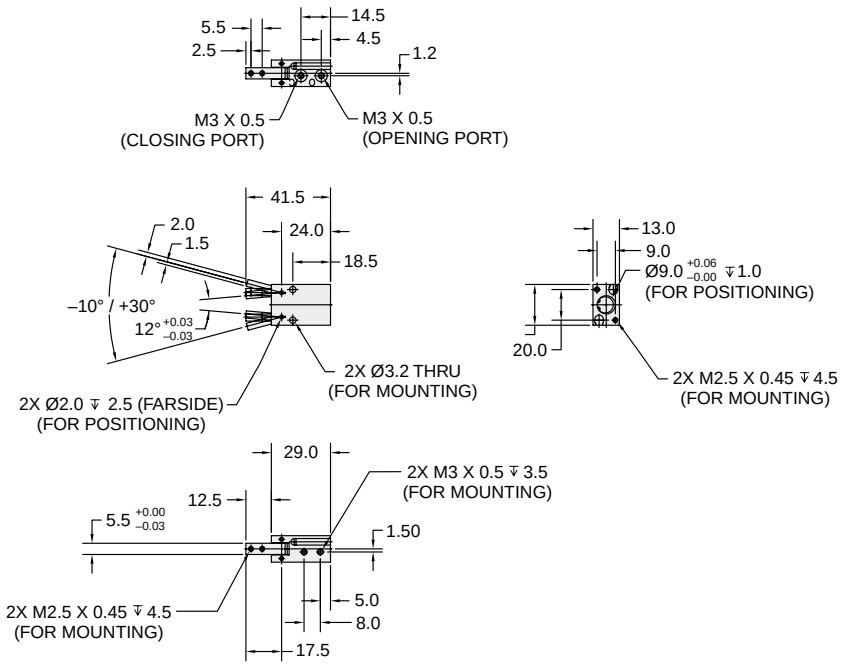


**Dimensions in mm.**



**Parker Hannifin Corporation**
Actuator Division
Wadsworth, Ohio USA

# GVC-10C

| | | |
|---|---|---|
| Total Grip Force (0.7 Mpa @ 25 mm) | 1.79 lbs | 8 N |
| Stroke (Degree) | -10 to +30 | |
| Weight | 0.088 lbs | 0.04 kg |
| Bore Size | 0.39 in | 10 mm |
| Cylinder Volume | 0.012 $in^3$ | 0.2 $cm^3$ |
| Repeatability | ± 0.0004 in | ± 0.01 mm |
| Temperature Range | 41° to 140° F | 5° to 60° C |
| Pressure Range | 14.5-101.5 psi | 1-7 bar |
| Filtration Requirement | 40 micron (dry air) | |

***Note: See model code and ordering information page for complete part number selection.***

## Loading Information

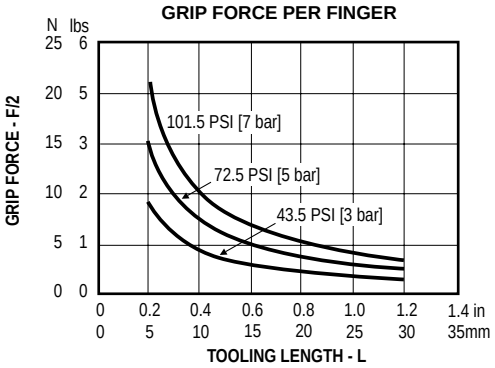


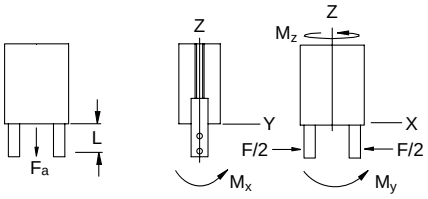


### Maximum Loading Capacity

| Loading Capacity | Static | |
|---|---|---|
| Axial Forces (Fa) | 4.1 lbs | 18 N |
| Moment (Mx) | 10.6 in-lb | 1.2 Nm |
| Moment (My) | 4.4 in-lb | 0.5 Nm |
| Moment (Mz) | 8.0 in-lb | 0.9 Nm |

## Dimensional Information

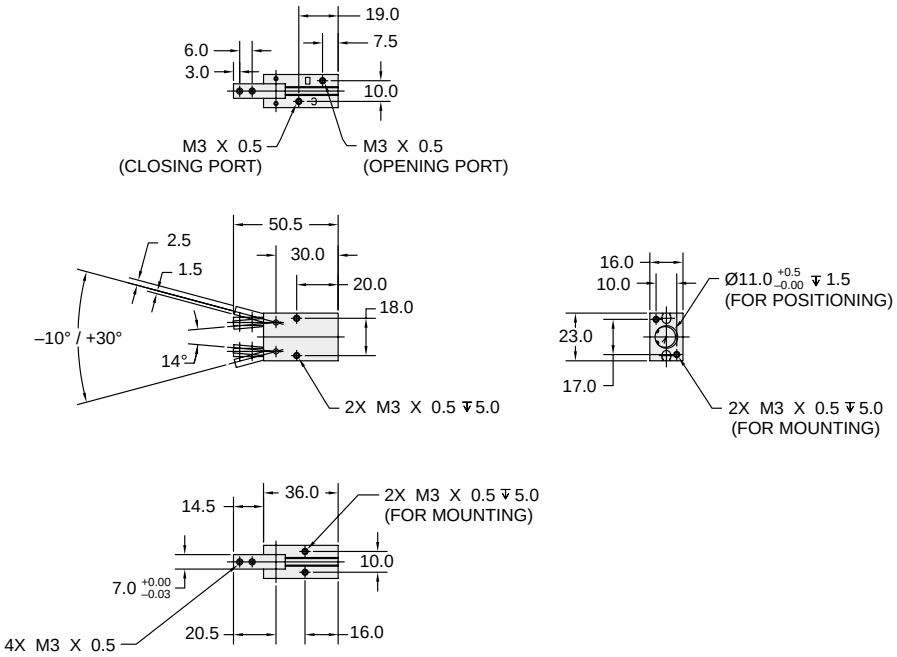


**Dimensions in mm.**



**Parker Hannifin Corporation**
Actuator Division
Wadsworth, Ohio USA

# GVC-16C

| | | |
|---|---|---|
| Total Grip Force (0.7 Mpa @ 25 mm) | 9.2 lbs | 41 N |
| Stroke (Degree) | -10 to +30 | |
| Weight | 0.21 lbs | 0.096 kg |
| Bore Size | 0.62 in | 16 mm |
| Cylinder Volume | 0.055 $in^3$ | 0.9 $cm^3$ |
| Repeatability | ± 0.0004 in | ± 0.01 mm |
| Temperature Range | 41° to 140° F | 5° to 60° C |
| Pressure Range | 14.5-101.5 psi | 1-7 bar |
| Filtration Requirement | 40 micron (dry air) | |

***Note: See model code and ordering information page for complete part number selection.***

## Loading Information

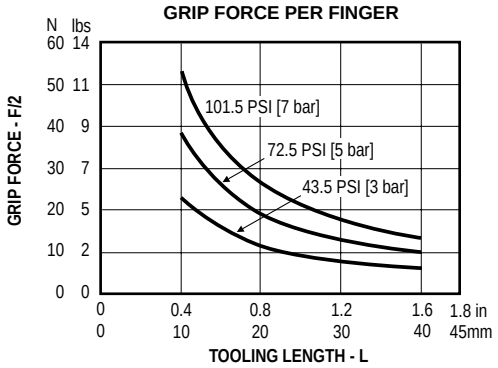


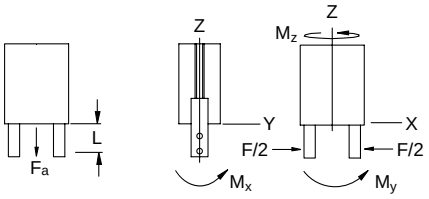


### Maximum Loading Capacity

| Loading Capacity | Static | |
|---|---|---|
| Axial Forces (F) | 8 lbs | 35.6 N |
| Moment (Mx) | 20.4 in-lb | 2.3 Nm |
| Moment (My) | 8.0 in-lb | 0.9 Nm |
| Moment (Mz) | 12.4 in-lb | 1.4 Nm |

## Dimensional Information

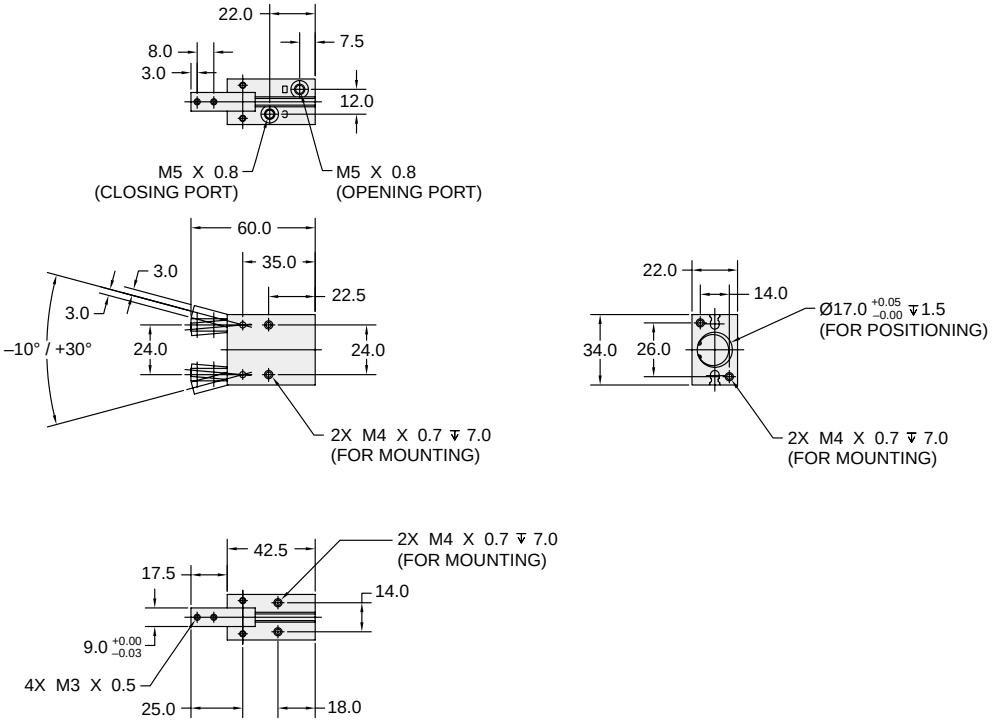


**Dimensions in mm.**



**Parker Hannifin Corporation**
Actuator Division
Wadsworth, Ohio USA

# GVC-20C

| | | |
|---|---|---|
| Total Grip Force (0.7 Mpa @ 25 mm) | 17.5 lbs | 78 N |
| Stroke (Degree) | -10 to +30 | |
| Weight | 0.39 lbs | 0.180 kg |
| Bore Size | 0.78 in | 20 mm |
| Cylinder Volume | 0.1 $in^3$ | 1.66 $cm^3$ |
| Repeatability | ± 0.0004 in | ± 0.01 mm |
| Temperature Range | 41° to 140° F | 5° to 60° C |
| Pressure Range | 14.5-101.5 psi | 1-7 bar |
| Filtration Requirement | 40 micron (dry air) | |

***Note: See model code and ordering information page for complete part number selection.***

## Loading Information

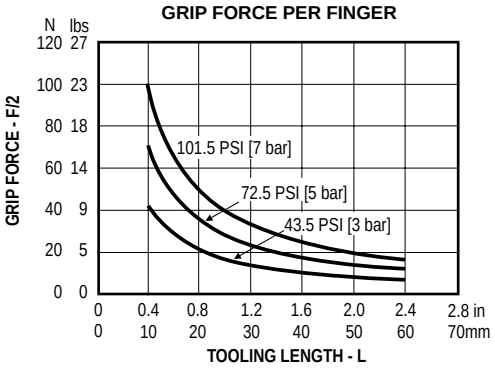


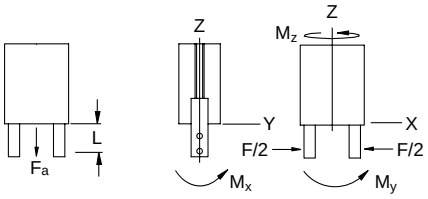


### Maximum Loading Capacity

| Loading Capacity | Static | |
|---|---|---|
| Axial Forces (F) | 13 lbs | 57.8 N |
| Moment (Mx) | 31 in-lb | 3.5 Nm |
| Moment (My) | 12.4 in-lb | 1.4 Nm |
| Moment (Mz) | 17.7 in-lb | 2.0 Nm |

## Dimensional Information

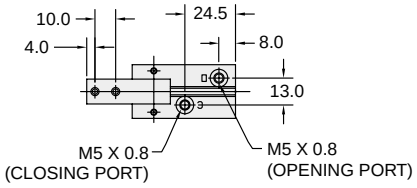


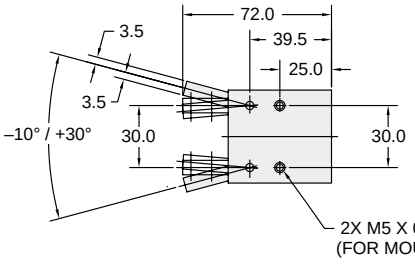


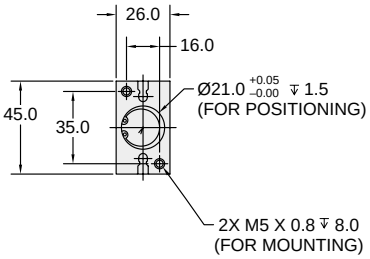


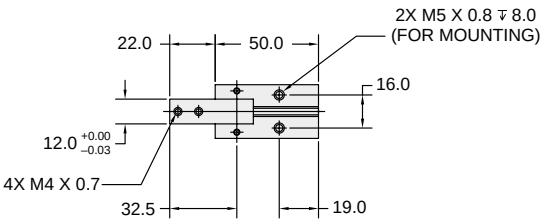


**Dimensions in mm.**



**Parker Hannifin Corporation**
Actuator Division
Wadsworth, Ohio USA

# GVC-25C

| | | |
|---|---|---|
| Total Grip Force (0.7 Mpa @ 25 mm) | 35.9 lbs | 160 N |
| Stroke (Degree) | -10 to +30 | |
| Weight | 0.69 lbs | 0.313 kg |
| Bore Size | 0.98 in | 25 mm |
| Cylinder Volume | 0.19 $in^3$ | 3.14 $cm^3$ |
| Repeatability | ± 0.0004 in | ± 0.01 mm |
| Temperature Range | 41° to 140° F | 5° to 60° C |
| Pressure Range | 14.5-101.5 psi | 1-7 bar |
| Filtration Requirement | 40 micron (dry air) | |

***Note: See model code and ordering information page for complete part number selection.***

## Loading Information

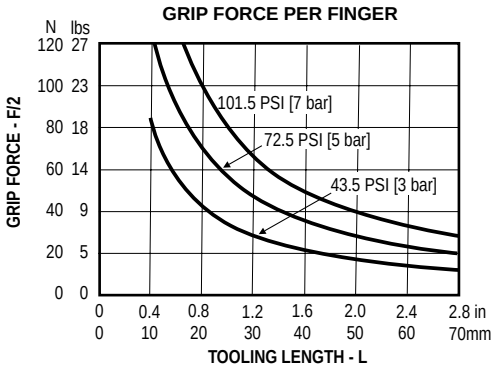


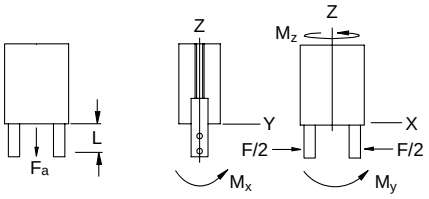


### Maximum Loading Capacity

| Loading Capacity | Static | |
|---|---|---|
| Axial Forces (F) | 17.2 lbs | 76.5 N |
| Moment (Mx) | 35.4 in-lb | 4 Nm |
| Moment (My) | 16.8 in-lb | 1.9 Nm |
| Moment (Mz) | 23 in-lb | 2.6 Nm |

## Dimensional Information

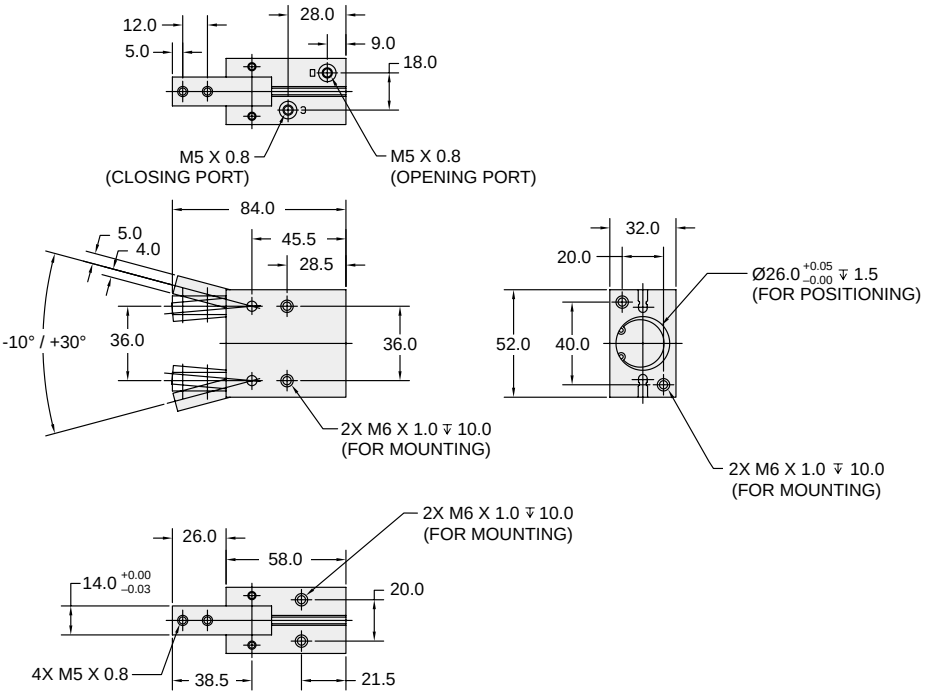


**Dimensions in mm.**



**Parker Hannifin Corporation**
Actuator Division
Wadsworth, Ohio USA

## Spring Assist (A)

The spring assist option allows for an automatic reset and jaw return. Selecting the spring assist option creates a single-acting gripper, which may reduce the number of directional control valves needed to operate automated machinery. The spring assist option also allws the fingers to return to the open position when pressure is lost during a power failure.

**Note:** The spring assist option does not change gripper dimensions.

| | Spring Force Only* | |
|---|---|---|
| **Size** | **N** | **lbs** |
| 8 | 3.9 | 0.9 |
| 10 | 6.8 | 1.5 |
| 16 | 12.6 | 2.9 |
| 20 | 18.6 | 4.2 |
| 25 | 28.4 | 6.5 |

*Values based on l = 30mm

## Model Code and Ordering Information

GVC – 10 A

**Series**

GVC

**Size**

8 – 8mm Bore
10 – 10mm Bore
16 – 16mm Bore
20 – 20mm Bore
25 – 25mm Bore

**Function**

C – Standard Double Acting
A – Spring Assist (Normally Open)

## Seal Kits

| Size | Nitrile Seal Kit |
|---|---|
| GVC-8 | PSK-GVC-8 |
| GVC-10 | PSK-GVC-10 |
| GVC-16 | PSK-GVC-16 |
| GVC-20 | PSK-GVC-20 |
| GVC-25 | PSK-GVC-25 |



**Parker Hannifin Corporation**
Actuator Division
Wadsworth, Ohio USA

**Parker Hannifin Corporation**
Actuator Division
Wadsworth, Ohio USA

## Features

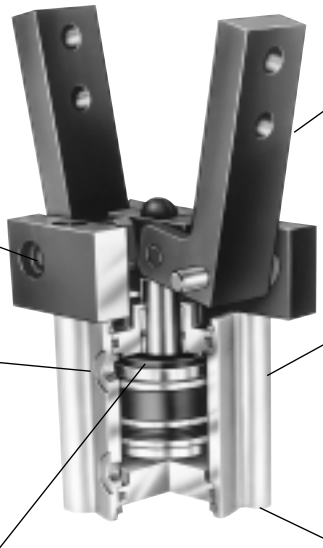

**Internal Components**
A hardened steel pin and self-lubricated bronze bearing support the gripper fingers, minimizing play after millions of cycles.

**Jaws**
Fingers are made from steel for added strength and durability with through holes for easy addition of customer tooling.

**Ports**
Standard 10-32 (M5) ports or optional Presto-lok right angle flow controls are available. The body can be rotated in the field in 90° increments to provide ports in other positions, simplifying plumbing and increasing design flexibility.

**Extruded Body**
The hard coat anodized body is machined from an aluminum extrusion to provide a slick seal surface which guarantees long seal life and low breakaway pressure.

**Bumpers**
Polyurethane bumper pad absorbs shock and noise, thus permitting faster cycle times, increased production rates and longer life.

**Mounting**
Combination side and base tapped holes are standard and provide for design flexibility. The base mount includes a pilot diameter for alignment. Mounting kits are also available to interface with other automation components.

**Seals**
Self lubriating dynamic seals (Nitrile or Fluorocarbon)

## Operation

Operating Characteristic ..... Double acting
Gripping Force @ 100 PSI ..... 24 - 56 lbs
Stroke ..... -5° to +30°
Operating Pressure Range ..... 10 - 100 PSI (0.7 - 7 bar)

## Mounting

Body mounts with screws and locates with center pilot diameter for accuracy.

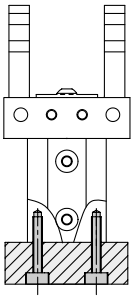

Fingers attach to jaws with screws.

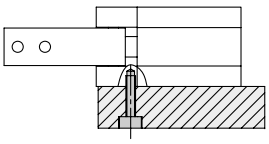

**WARNING!** Protect drive and bearing mechanism from falling debris when mounted with fingers up.

## Contents

GAA101 ..... 140
GAA151 ..... 141
Right Angle Flow Controls ..... 142
Port Location Option ..... 142
Sensor Mounting Bracket ..... 143
Magnetic Piston ..... 143
Fluorocarbon Seals ..... 143
Sensors ..... 143
Ordering Information ..... 144



**Parker Hannifin Corporation**
Actuator Division
Wadsworth, Ohio USA

# GAA101

| | | |
|---|---|---|
| Total Grip Force (100 psi @ 1.5 in) | 24 lbs | 106 N |
| Stroke (Degree) | -5 to +30 | |
| Weight | 1.1 lbs | 0.49 kg |
| Bore Size | 1 in | 25.4 mm |
| Cylinder Volume | 3.85 $in^3$ | 15 $cm^3$ |
| Repeatability | ± 0.001 in | ± 0.03 mm |
| Temperature Range* | 0° to 180° F | 17° to 80° C |
| Pressure Range | 40-100 psi | 3-7 bar |
| Filtration Requirement | 40 micron (dry air) | |

* Fluorocarbon seals available for high temperature applications

***Note: See model code and ordering information page for complete part number selection.***

## Loading Information

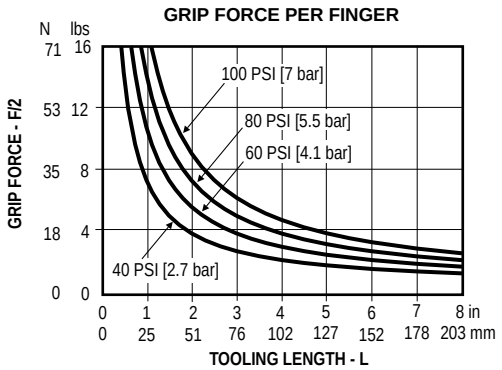


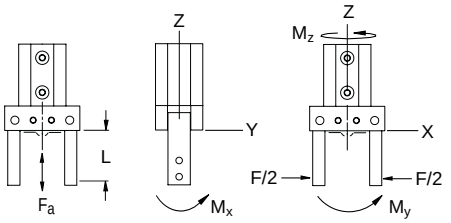


### Maximum Loading Capacity

| Loading Capacity | Static | |
|---|---|---|
| Axial Forces (Fa) | 18 lbs | 80 N |
| Moment (Mx) | 22 in-lbs | 2.5 Nm |
| Moment (My) | 22 in-lbs | 2.5 Nm |
| Moment (Mz) | 12 in-lbs | 1.4 Nm |

## Dimensional Information

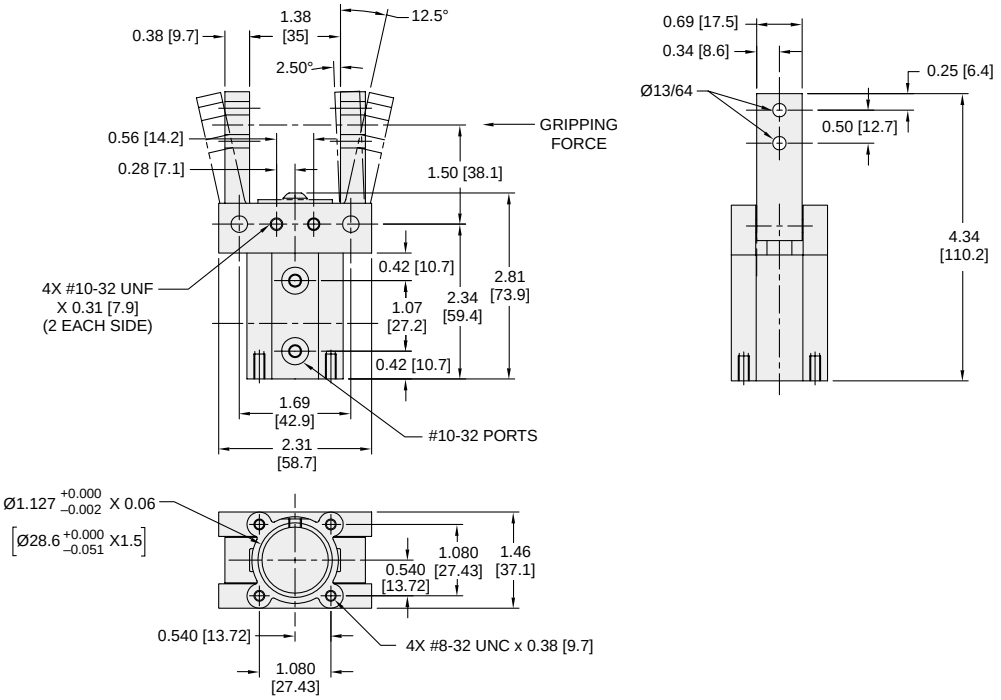


**Dimensions in inch [mm].**



**Parker Hannifin Corporation**
Actuator Division
Wadsworth, Ohio USA

# GAA151

| | | |
|---|---|---|
| Total Grip Force (100 psi @ 1.5 in) | 56 lbs | 249 N |
| Stroke (Degree) | -5 to +30 | |
| Weight | 2 lbs | 0.90 kg |
| Bore Size | 1.5 in | 38.1 mm |
| Cylinder Volume | 3.85 $in^3$ | 63 $cm^3$ |
| Repeatability | ± 0.001 in | ± 0.03 mm |
| Temperature Range* | 0° to 180° F | 17° to 80° C |
| Pressure Range | 40-100 psi | 3-7 bar |
| Filtration Requirement | 40 micron (dry air) | |

* Fluorocarbon seals available for high temperature applications

***Note: See model code and ordering information page for complete part number selection.***

## Loading Information

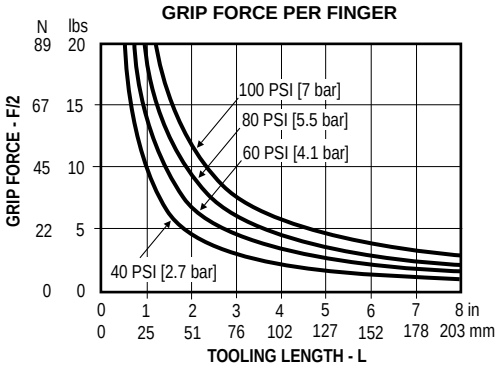


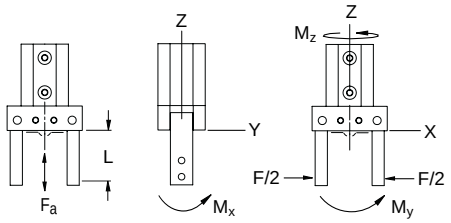


### Maximum Loading Capacity

| Loading Capacity | Static | |
|---|---|---|
| Axial Forces (Fa) | 28 lbs | 124 N |
| Moment (Mx) | 30 in-lbs | 3.4 Nm |
| Moment (My) | 30 in-lbs | 3.4 Nm |
| Moment (Mz) | 17 in-lbs | 2.0 Nm |

## Dimensional Information

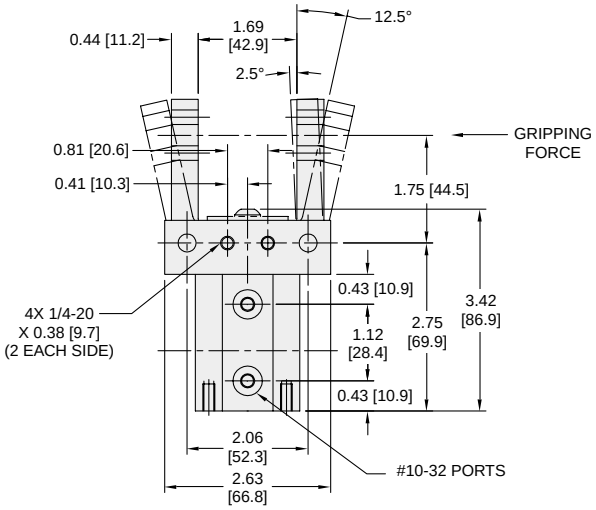


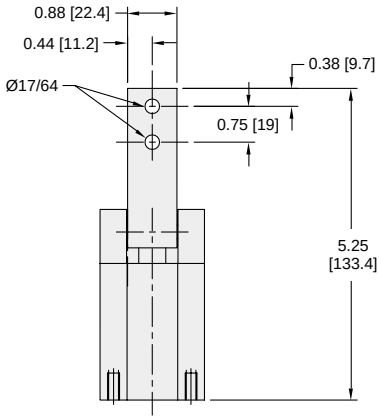


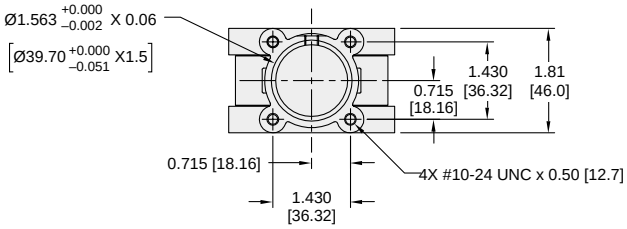


**Dimensions in inch [mm].**





**Parker Hannifin Corporation**
Actuator Division
Wadsworth, Ohio USA

## Right Angle Flow Control (P)

Right angle flow control valves allow precise adjustment of cylinder speed by metering exhaust air flow. Presto-Lok push-in ports provide 360° orientation capability.

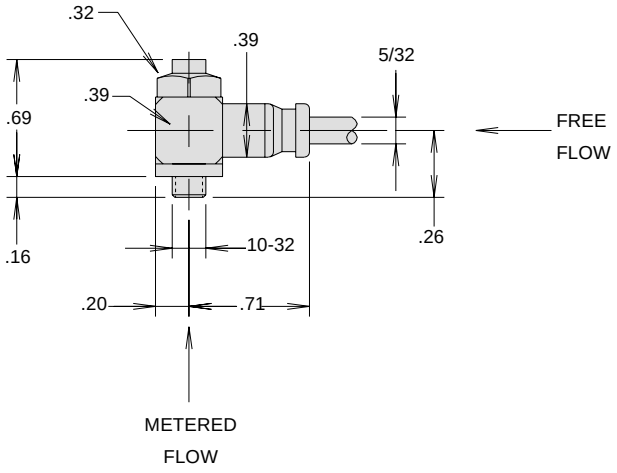


## Port Location (1, 2)

GA Series grippers are symmetrical. Ports position 1 is standard. Position 3 can be obtained by rotating the gripper 180°. Ports position 2 is an option. Position 4 is obtainable by ordering port position 2 and rotating 180°.

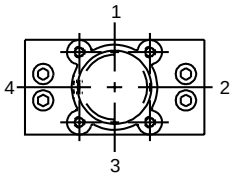


## Proximity Sensor Bracket (J)

Proximity sensors sense the position of the flag that is attached to the gripper finger. The flag is held onto the gripper finger by a set screw. Loosening the set screw allows positioning of the flag to sense any position of the gripper finger. Care should be taken when adjusting the proximity sensor so that the flag does not physically contact the sensor. The distance from the flag to the sensor should be approximately 0.04 inches.

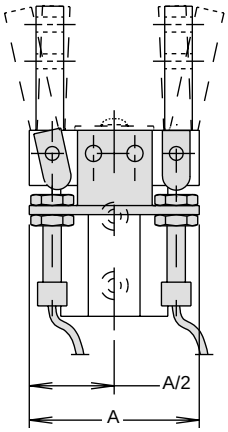


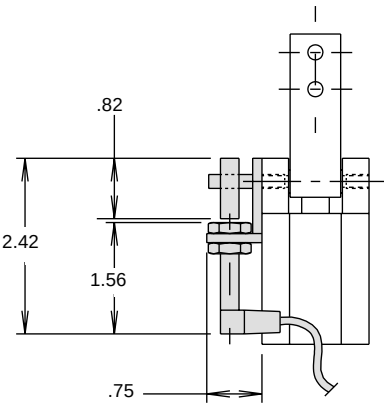


| Model | A |
|---|---|
| GAA10 | 2.51 |
| GAA15 | 2.63 |

## Magnetic Piston (M)

This option prepares the actuator for use with reed and Hall Effect switches. The "M" option should be specified to provide a magnet on the cylinder piston.

Order switches separately. See Sensor section for part numbers and sensor specifications.

## Hall Effect and Reed Switches

Order switches separately. See Sensor section for part numbers and sensor specifications.

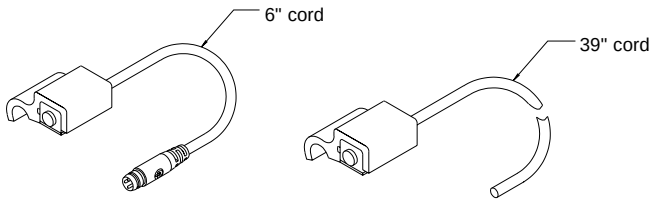


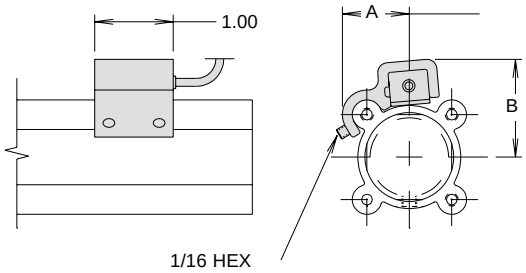


### Dimensions

| Model | A | B |
|---|---|---|
| GAA10 | .84 | 1.22 |
| GAA15 | .99 | 1.46 |

## Fluorocarbon Seals (V)

Standard abrasion resistant nitrile seals should be used for general purpose applications with temperatures of 0 to 180°F.

Fluorocarbon seals are recommended for high temperature applications up to 250°F.

| Option | Temperature Range (°F) |
|---|---|
| Bumpers | 0 - 200 |
| Piston Magnets | 0 - 165 |
| Switches | 14 - 140 |
| Proximity Sensor | -13 - 158 |



**Parker Hannifin Corporation**
Actuator Division
Wadsworth, Ohio USA

## Model Code and Ordering Information

GA A 15 1 P – A 2 1 J V – A

**Series**
GA

**Type**
A - Standard 30°

**Size**
10 - 1 in. bore
15 - 1.5 in. bore

**Opening Characteristics**
1 - Double acting (STD)

**Flow Controls**
Omit - None
P - Right angle flow control (both)

**Mounting**
A - Rear and side tapped holes (STD)

**Port Type**
2 - 10-32 (STD)
8 - Presto-Lok right angle flow control

**Port Location**
1 - Position 1 (STD)
2 - Position 2

**Switches**
Omit - None
J - Bracket for proximity sensor option*
M - Magnetic piston for reed and Hall Effect switch option*

**Seals**
Omit - Nitrile (STD)
V - Fluorocarbon

**Design Series**
A - Current Design Series

* Proximity sensor, Hall Effect, and reed switches to be ordered separately.

## Seal Kits

| Size | Nitrile Seal Kit | Fluorocarbon Seal Kit |
|---|---|---|
| GAA10 | PSK-G10 | PSK-G10V |
| GAA15 | PSK-G15 | PSK-G15V |

## Features

**Body**
One piece hard coat anodized aluminum body with Teflon® impregnation.

**Internal Components**
Internal components are precision ground from hardened steel for maximum life and minimal jaw play.

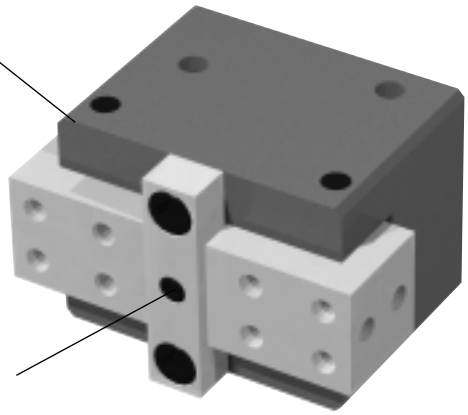

**Dowel Pin Holes**
Slip fit dowels located in gripper body.

**Seals**
Self-lubricating dynamic seals (Nitrile only)

**Stroke Adjustment**
Limits open position of jaws.

**Optional Sensors**
Read position of piston. Magnetic piston is standard. (Order sensor separately)



## Operation

Operating Characteristic ..... Double acting, cam design

Gripping Force @ 100 PSI ..... 11 - 134 lbs

Stroke ..... -2° to +30°

Operating Pressure Range ..... 40 - 100 PSI (3 - 7 bar)

### Not recommended for applications containing:

- Dirt or grit
- Machining chips
- Environments with loose particulate
- Mechanism lubricant that could cause contamination

## Mounting

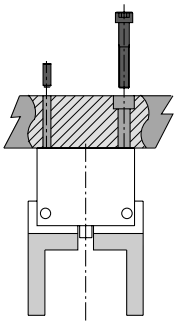

Gripper mounts using tapped holes and slip fit dowel pin holes.

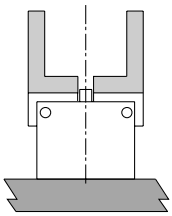

**WARNING!** Protect jaw mechanism from falling debris.

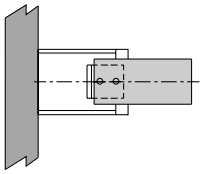

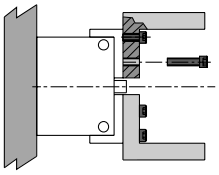

Custom finger tooling mounts using tapped holes and precise tolerancing of fingers.

## Contents

P5G-HA-5 ..... 146
P5G-HA-6 ..... 147
P5G-HA-7 ..... 148
P5G-HA-8 ..... 149
P5G-HA-10 Miniature ..... 150
Metric Design Option ..... 151
Ordering Information ..... 151



**Parker Hannifin Corporation**
Actuator Division
Wadsworth, Ohio USA

## P5G-HA-5M

| | | |
|---|---|---|
| Total Grip Force (100 psi @ 1 in) | 14 lbs | 62 N |
| Total Stroke (Degree) | -2 to +30 | |
| Weight | 0.25 lbs | 0.11 kg |
| Bore Size | 0.813 in | 20.6 mm |
| Cylinder Volume | 0.13 $in^3$ | 2.1 $cm^3$ |
| Repeatability | ± 0.003 in | ± 0.08 mm |
| Temperature Range* | -30° to 180° F | -35° to 80° C |
| Pressure Range | 40-100 psi | 3-7 bar |
| Filtration Requirement | 40 micron (dry air) | |

* Fluorocarbon seals available for high temperature applications

***Note: See model code and ordering information page for complete part number selection.***

## Loading Information

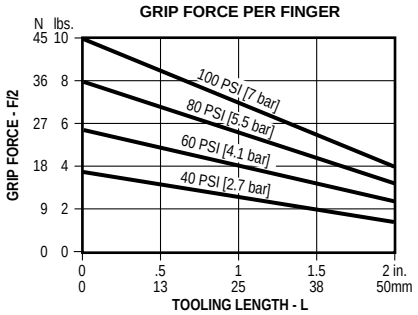


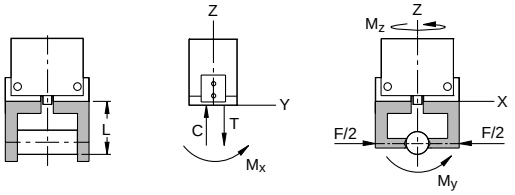


### Maximum Loading Capacity

| Load | Static | | Dynamic | |
|---|---|---|---|---|
| Axial Forces (C,T) | 10 lbs | 44 N | 10 lbs | 44 N |
| Moment (Mx) | 10 in-lbs | 1.1 Nm | 10 in-lbs | 1.1 Nm |
| Moment (My) | 10 in-lbs | 1.1 Nm | 10 in-lbs | 1.1 Nm |
| Moment (Mz) | 10 in-lbs | 1.1 Nm | 10 in-lbs | 1.1 Nm |

## Dimensional Information

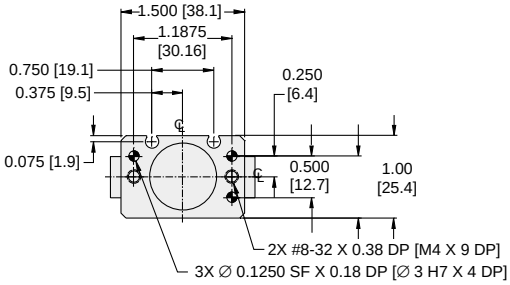


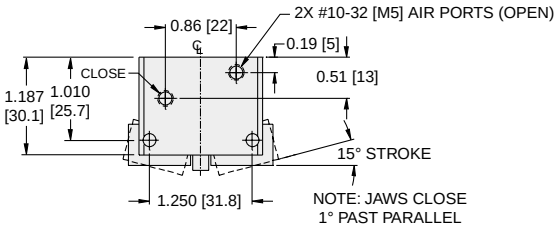


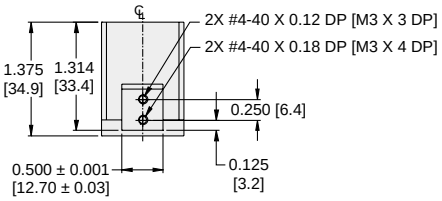


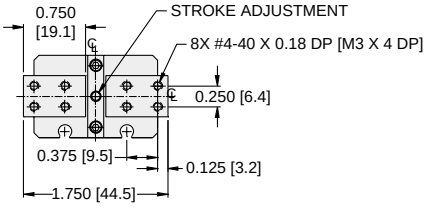


**Dimensions in inch [mm].**



**Parker Hannifin Corporation**
Actuator Division
Wadsworth, Ohio USA

## P5G-HA-6M

| | | |
|---|---|---|
| Total Grip Force (100 psi @ 1 in) | 36 lbs | 160 N |
| Total Stroke (Degree) | -2 to +30 | |
| Weight | 0.69 lbs | 0.31 kg |
| Bore Size | 1.25 in | 31.8 mm |
| Cylinder Volume | 0.30 $in^3$ | 4.9 $cm^3$ |
| Repeatability | ± 0.003 in | ± 0.08 mm |
| Temperature Range* | -30° to 180° F | -35° to 80° C |
| Pressure Range | 40-100 psi | 3-7 bar |
| Filtration Requirement | 40 micron (dry air) | |

* Fluorocarbon seals available for high temperature applications

***Note: See model code and ordering information page for complete part number selection.***

## Loading Information

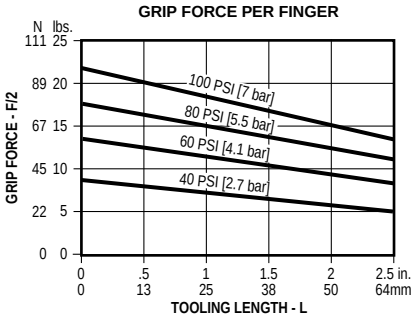


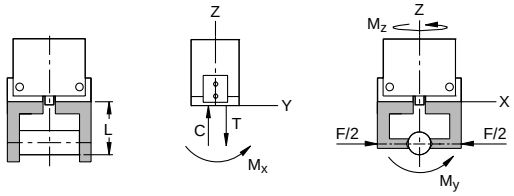


### Maximum Loading Capacity

| Load | Static | | Dynamic | |
|---|---|---|---|---|
| Axial Forces (C,T) | 20 lbs | 89 N | 20 lbs | 89 N |
| Moment (Mx) | 20 in-lbs | 23 Nm | 20 in-lbs | 23 Nm |
| Moment (My) | 20 in-lbs | 23 Nm | 20 in-lbs | 23 Nm |
| Moment (Mz) | 20 in-lbs | 23 Nm | 20 in-lbs | 23 Nm |

## Dimensional Information

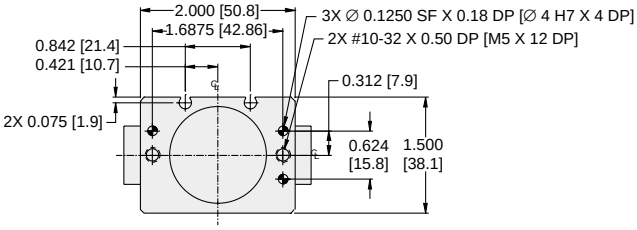


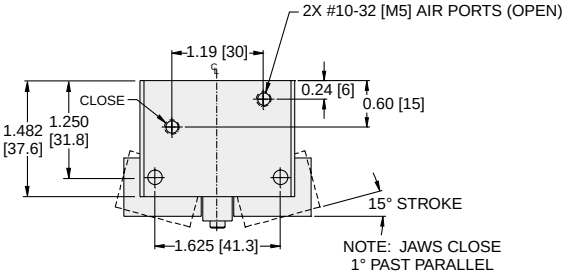


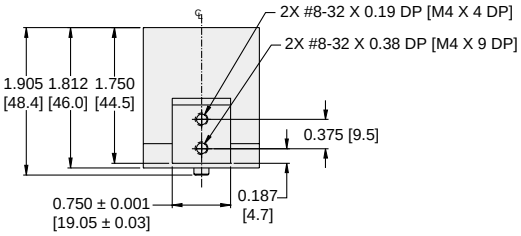


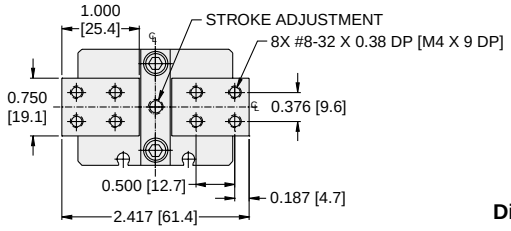


**Dimensions in inch [mm].**





**Parker Hannifin Corporation**
Actuator Division
Wadsworth, Ohio USA

## P5G-HA-7M

| | | |
|---|---|---|
| Total Grip Force (100 psi @ 1 in) | 96 lbs | 427 N |
| Total Stroke (Degree) | -2 to +30 | |
| Weight | 1.8 lbs | 0.8 kg |
| Bore Size | 1.75 in | 44.4 mm |
| Cylinder Volume | 0.601 $in^3$ | 9.8 $cm^3$ |
| Repeatability | ± 0.003 in | ± 0.08 mm |
| Temperature Range* | -30° to 180° F | -35° to 80° C |
| Pressure Range | 40-100 psi | 3-7 bar |
| Filtration Requirement | 40 micron (dry air) | |

* Fluorocarbon seals available for high temperature applications

***Note: See model code and ordering information page for complete part number selection.***

## Loading Information

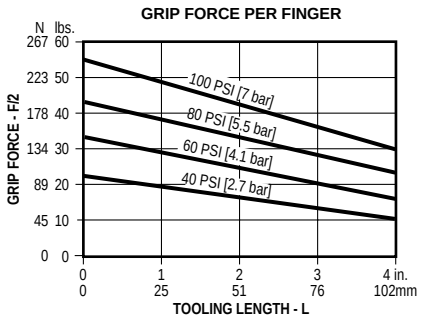


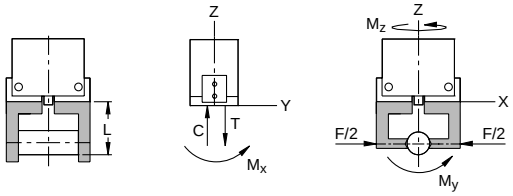


### Maximum Loading Capacity

| Load | Static | | Dynamic | |
|---|---|---|---|---|
| Axial Forces (C,T) | 60 lbs | 267 N | 60 lbs | 267 N |
| Moment (Mx) | 60 in-lbs | 6.8 Nm | 60 in-lbs | 6.8 Nm |
| Moment (My) | 61 in-lbs | 6.8 Nm | 61 in-lbs | 6.8 Nm |
| Moment (Mz) | 62 in-lbs | 6.8 Nm | 62 in-lbs | 6.8 Nm |

## Dimensional Information

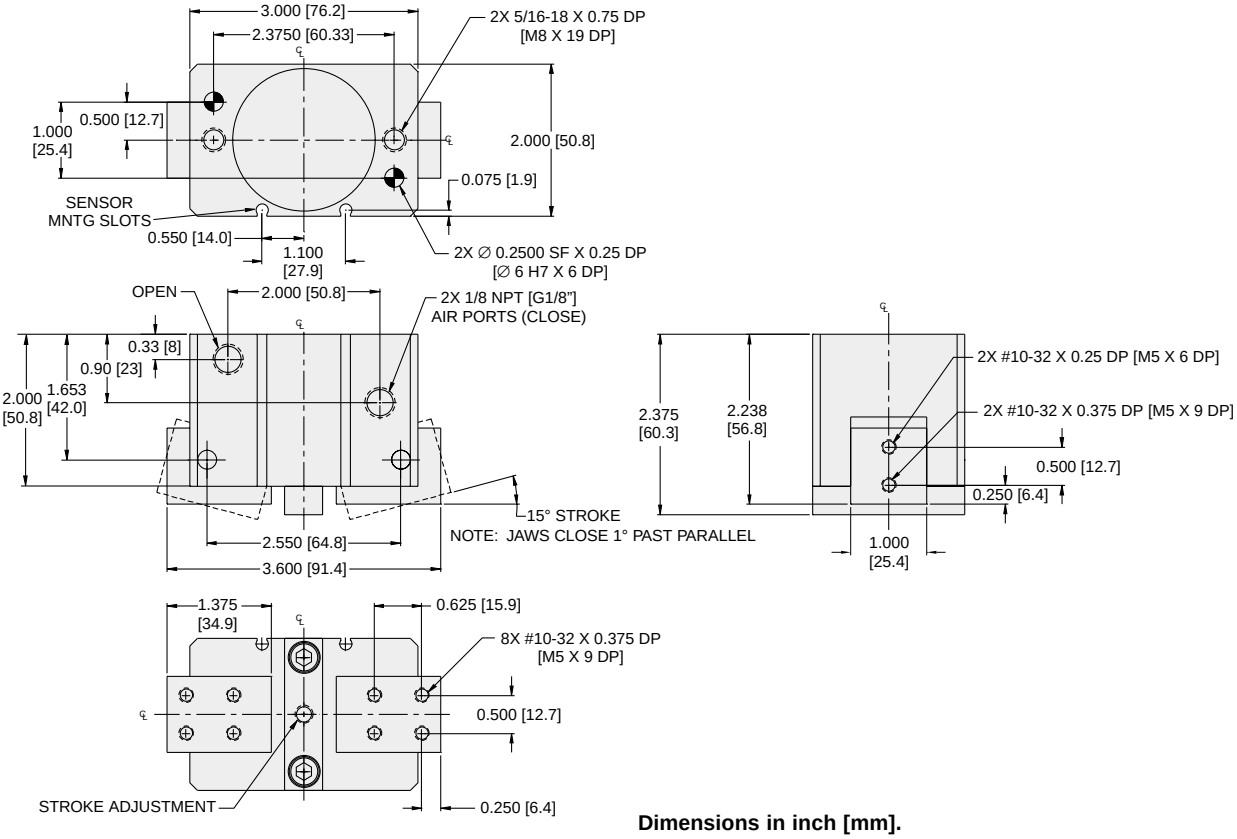


**Dimensions in inch [mm].**



**Parker Hannifin Corporation**
Actuator Division
Wadsworth, Ohio USA

## P5G-HA-8M

| | | |
|---|---|---|
| Total Grip Force (100 psi @ 1 in) | 134 lbs | 596 N |
| Total Stroke (Degree) | -2 to +30 | |
| Weight | 4.6 lbs | 2.1 kg |
| Bore Size | 2.5 in | 63.5 mm |
| Cylinder Volume | 1.32 $in^3$ | 21.6 $cm^3$ |
| Repeatability | ± 0.003 in | ± 0.08 mm |
| Temperature Range* | -30° to 180° F | -35° to 80° C |
| Pressure Range | 40-100 psi | 3-7 bar |
| Filtration Requirement | 40 micron (dry air) | |

* Fluorocarbon seals available for high temperature applications

***Note: See model code and ordering information page for complete part number selection.***

## Loading Information

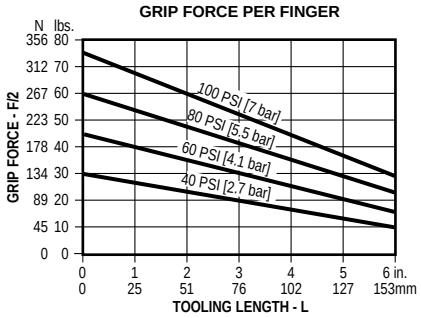


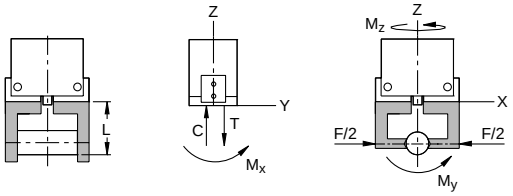


### Maximum Loading Capacity

| Load | Static | | Dynamic | |
|---|---|---|---|---|
| Axial Forces (C,T) | 90 lbs | 400 N | 90 lbs | 400 N |
| Moment (Mx) | 60 in-lbs | 6.8 Nm | 60 in-lbs | 6.8 Nm |
| Moment (My) | 60 in-lbs | 6.8 Nm | 60 in-lbs | 6.8 Nm |
| Moment (Mz) | 60 in-lbs | 6.8 Nm | 60 in-lbs | 6.8 Nm |

## Dimensional Information

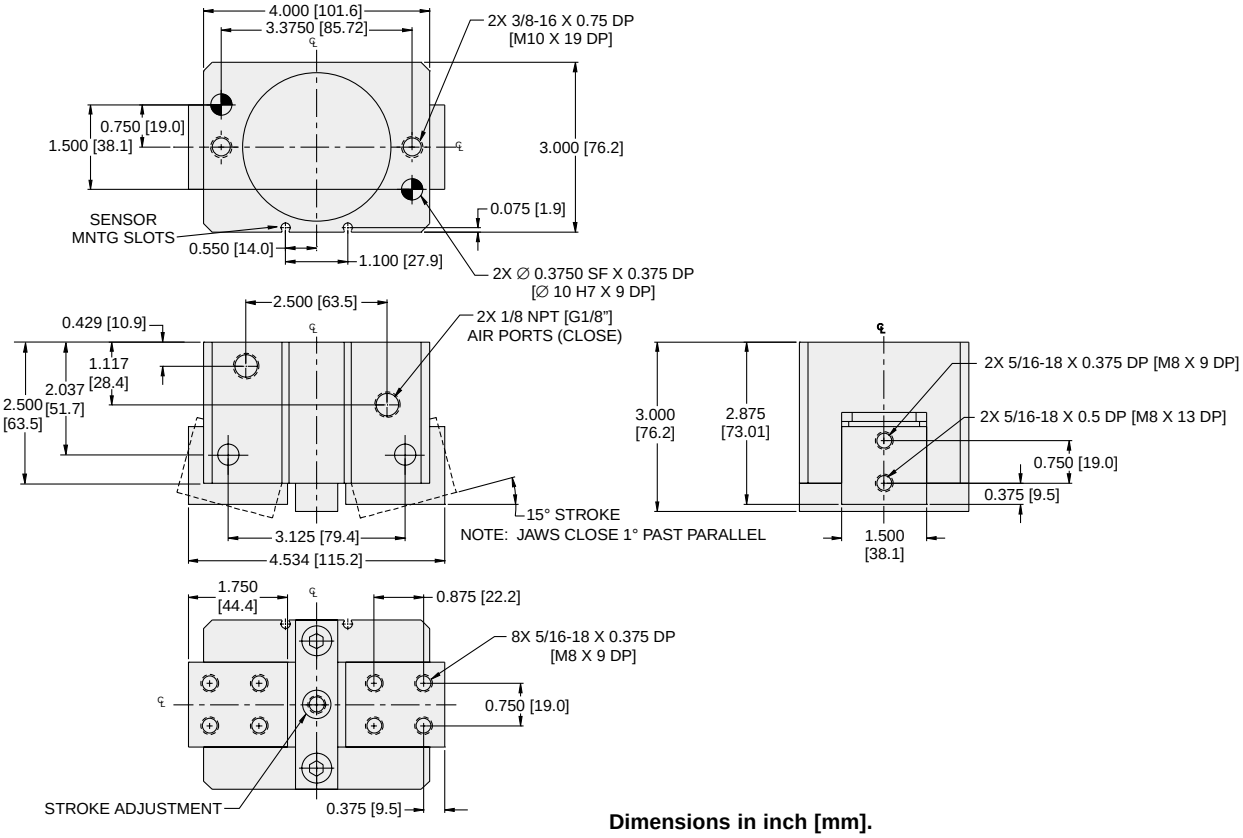


**Dimensions in inch [mm].**





**Parker Hannifin Corporation**
Actuator Division
Wadsworth, Ohio USA

## P5G-HA-10M

| | | |
|---|---|---|
| Total Grip Force (100 psi @ 1 in) | 11 lbs | 48.9 N |
| Total Stroke (Degree) | -2 to +30 | |
| Weight | 0.063 lbs | 0.03 kg |
| Bore Size | 0.813 in | 20.6 mm |
| Cylinder Volume | 0.026 $in^3$ | 0.4 $cm^3$ |
| Repeatability | ± 0.001 in | ± 0.03 mm |
| Temperature Range* | -30° to 180° F | -35° to 80° C |
| Pressure Range | 40-100 psi | 3-7 bar |
| Filtration Requirement | 40 micron (dry air) | |

* Fluorocarbon seals available for high temperature applications

***Note: See model code and ordering information page for complete part number selection.***

## Loading Information

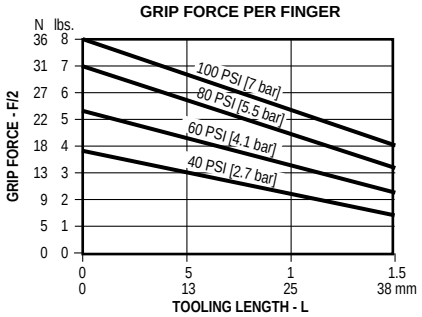


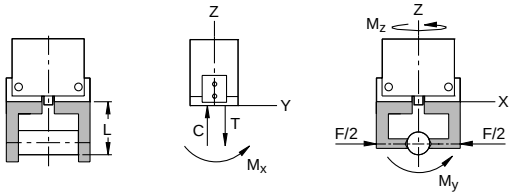


### Maximum Loading Capacity

| Load | Static | | Dynamic | |
|---|---|---|---|---|
| Axial Forces (C,T) | 5 lbs | 22 N | 5 lbs | 22 N |
| Moment (Mx) | 5 in-lbs | .6 Nm | 5 in-lbs | .6 Nm |
| Moment (My) | 5 in-lbs | .6 Nm | 5 in-lbs | .6 Nm |
| Moment (Mz) | 5 in-lbs | .6 Nm | 5 in-lbs | .6 Nm |

## Dimensional Information

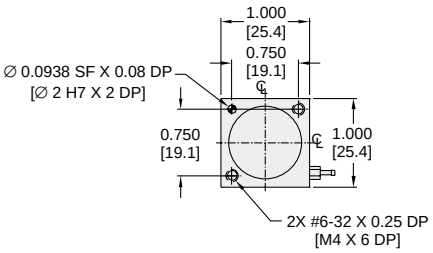


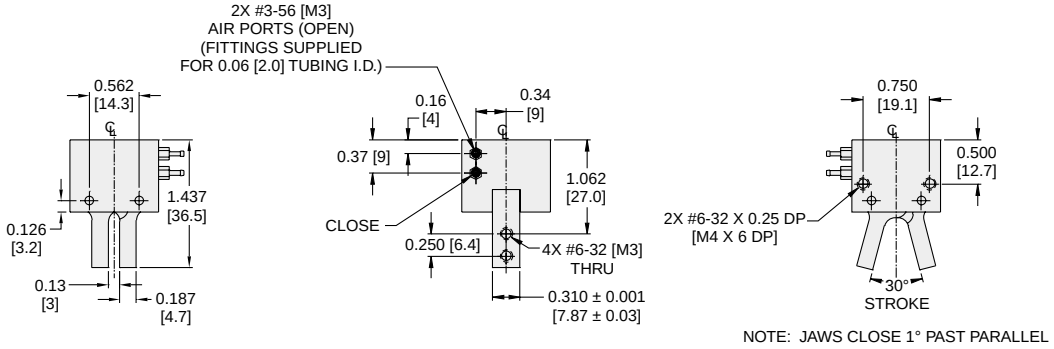


NOTE: JAWS CLOSE 1° PAST PARALLEL

**Dimensions in inch [mm].**



**Parker Hannifin Corporation**
Actuator Division
Wadsworth, Ohio USA

## Metric Unit (M)

The standard unit is manufactured with imperial mounting and porting. When this option is specified, the gripper incorporates metric threads and ports.

Reference dimensional drawings for more details.

## Fluorocarbon Seals (V)

Standard nitrile seals should be used for general purpose applications with temperatures of –30° to 180° F (-35° to 80° C). Fluorocarbon seals are recommended for high temperature applications up to 250° F (120° C).

| Seal Type | Temperature Range |
|---|---|
| Standard Buna-N | -30° to 180°F (-35 to 80°C) |
| Fluorocarbon | -20° to 250°F (-xx° to 120°C) |

## Hall Effect Sensors

Hall effect sensors provide feedback to the position of the gripper fingers by sensing a magnet within the piston. Sensors mount in the sensor mounting grooves in the gripper body and are adjustable to sense along the full travel of the piston.

Order sensors and cables separately. See Sensor section for part numbers and sensor specifications.

***Note:*** *Sensors not available for P5G-HA-10.*

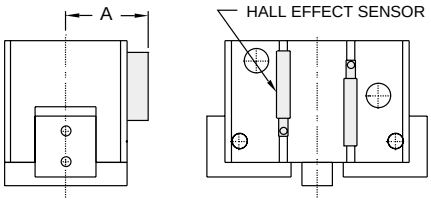


### Dimensions

| Model | A inch (mm) |
|---|---|
| 5 | 0.70 (18) |
| 6 | 1.01 (26) |
| 7 | 1.35 (34) |
| 8 | 1.85 (47) |



**Parker Hannifin Corporation**
Actuator Division
Wadsworth, Ohio USA

## Model Code and Ordering Information

P5G – HA – 6 M – V

**Global Pneumatic Gripper**

P5G

**Series**

HA

**Size**

5 – 0.81 inch Bore
6 – 1.25 inch Bore
7 – 1.75 inch Bore
8 – 2.50 inch Bore
10 – 0.813 inch Bore, Compact Body

**Mounting/Porting**

Omit – Imperial Units (Standard)
M – Metric Units

**Seals**

Omit – Nitrile Seals (Standard)
V – Fluorocarbon Seals

## Seal Kits

| Size | Nitrile Seal Kit | Fluorocarbon Seal Kit |
|---|---|---|
| P5G-HA-5 | PSK-P5G-HA-5 | PSK-P5G-HA-5V |
| P5G-HA-6 | PSK-P5G-HA-6 | PSK-P5G-HA-6V |
| P5G-HA-7 | PSK-P5G-HA-7 | PSK-P5G-HA-7V |
| P5G-HA-8 | PSK-P5G-HA-8 | PSK-P5G-HA-8V |
| P5G-HA-10 | PSK-P5G-HA-10 | PSK-P5G-HA-10V |

## Features

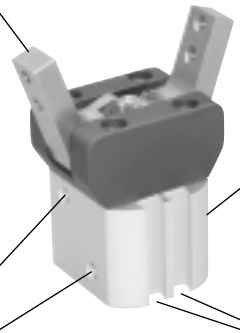

**Jaws**
Hardened stainless steel jaws are standard.

**Magnetic Piston**
Standard on all grippers.

**Bumpers**
Reduce noise and dissipate energy, thus permitting faster cycle times and increased production rates.

**Body**
Machined from an aluminum extrusion that is anodized and permanently sealed. This results in a smooth seal surface which guarantees long seal life and low breakaway pressure.

**Mounting**
Combination side and rear tapped holes are standard and provide for design flexibility. Both mounting positions include dowel holes for alignment.

**Sensor Grooves**
All gripper sizes are equipped with two sensor grooves for standard Parker sensors.

**Ports**
Standard M5 female ports or optional Presto-lok right angle flow controls.

**Sensors**
Grippers may be ordered with proximity, Hall Effect or reed sensors. A "prox ready" option is also available.

**Multiple Function**
Jaw travel either grip open or grip close.



## Operation

Operating Characteristic ..... Double acting
Gripping Force @ 100 PSI ..... 11 - 134 lbs
Stroke ..... -5° to +30°
Operating Pressure Range ..... 40 - 100 PSI (3 - 7 bar)

### Not recommended for applications containing:

- Dirt or grit
- Machining chips
- Environments with loose particulate
- Mechanism lubricant that could cause contamination

## Mounting

Gripper mounts with screws and locates with dowel pin holes for accuracy.

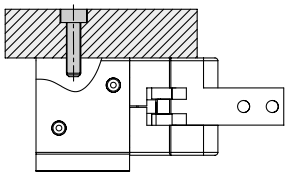

Gripper mounts with screws and locates with center pilot diameter for accuracy.

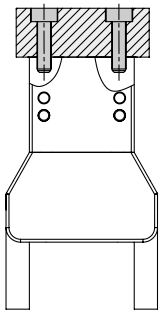

**Warning!** Protect drive and bearing mechanism from falling debris when mounted with fingers up.

## Contents

P5G-AA3 ..... 154
P5G-AA4 ..... 155
P5G-AA5 ..... 156
P5G-AA6 ..... 157
Right Angle Flow Controls ..... 158
Sprint Return Option ..... 158
Sensors ..... 159
Fluorocarbon Seals ..... 159
Ordering Information ..... 160
Seal Kits ..... 160



**Parker Hannifin Corporation**
Actuator Division
Wadsworth, Ohio USA

## P5G-AA3

| | | |
|---|---|---|
| Total Grip Force (0.7 Mpa @ 25 mm) | 17.4 lbs | 77.7 N |
| Stroke (Degree) | -5 to +30 | |
| Weight | 0.27 lbs | 0.122 kg |
| Bore Size | 0.62 in | 16 mm |
| Cylinder Volume | 0.07 $in^3$ | 1.14 $cm^3$ |
| Repeatability | ± 0.003 in | ± 0.076 mm |
| Temperature Range* | -4° to 180° F | -20° to 82° C |
| Pressure Range | 4-100 psi | 0.3-7 bar |
| Filtration Requirement | 40 micron (dry air) | |

* Fluorocarbon seals available for high temperature applications

***Note: See model code and ordering information page for complete part number selection.***

## Loading Information

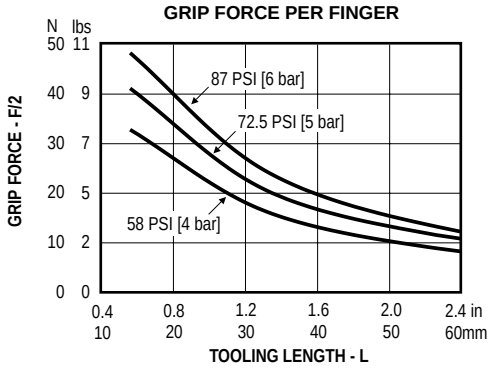


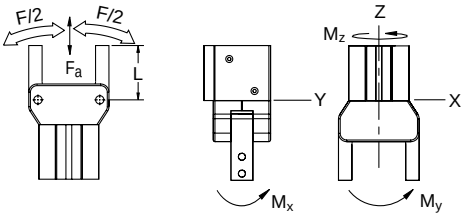


### Maximum Loading Capacity

| Load | Static | |
|---|---|---|
| Axial Forces (Fa) | 20.1 lbs | 88 N |
| Moment (Mx) | 38.7 in-lbs | 4.3 Nm |
| Moment (My) | 38.7 in-lbs | 4.3 Nm |
| Moment (Mz) | 37.8 in-lbs | 4.2 Nm |

## Dimensional Information

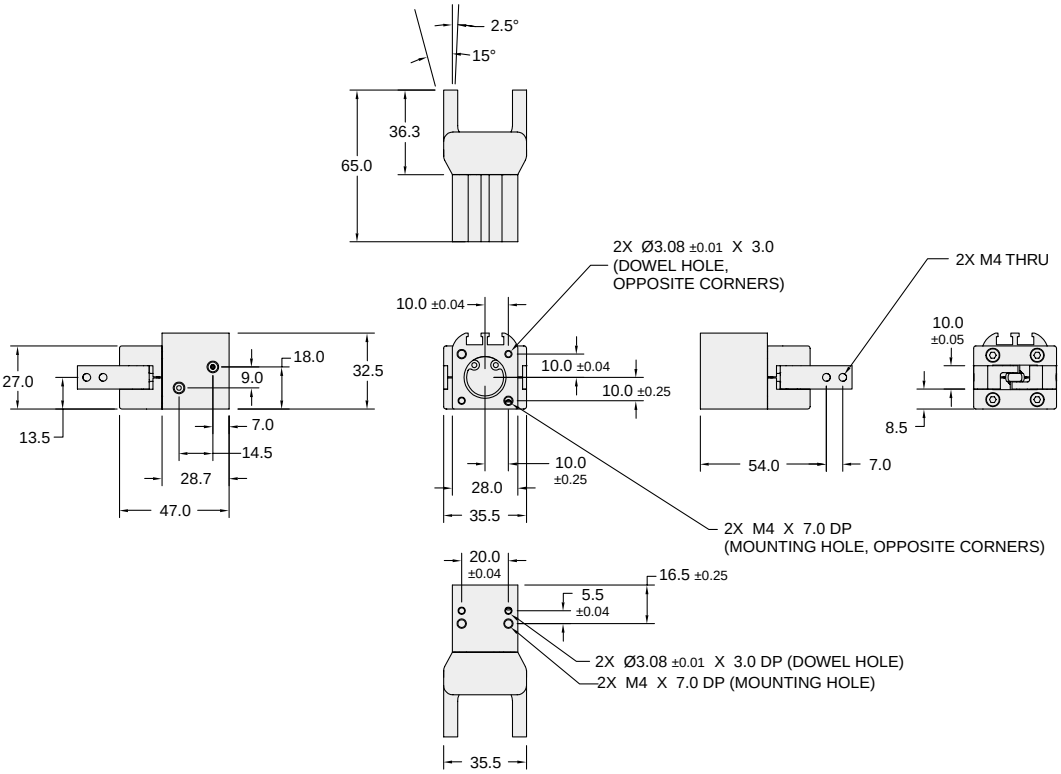


**Dimensions in mm.**



**Parker Hannifin Corporation**
Actuator Division
Wadsworth, Ohio USA

## P5G-AA4

| | | |
|---|---|---|
| Total Grip Force (0.7 Mpa @ 25 mm) | 46.9 lbs | 208.8 N |
| Stroke (Degree) | -5 to +30 | |
| Weight | 0.54 lbs | 0.244 kg |
| Bore Size | 0.98 in | 25 mm |
| Cylinder Volume | 0.3 $in^3$ | 4.9 $cm^3$ |
| Repeatability | ± 0.003 in | ± 0.076 mm |
| Temperature Range* | -4° to 180° F | -20° to 82° C |
| Pressure Range | 4-100 psi | 0.3-7 bar |
| Filtration Requirement | 40 micron (dry air) | |

* Fluorocarbon seals available for high temperature applications

***Note: See model code and ordering information page for complete part number selection.***

## Loading Information

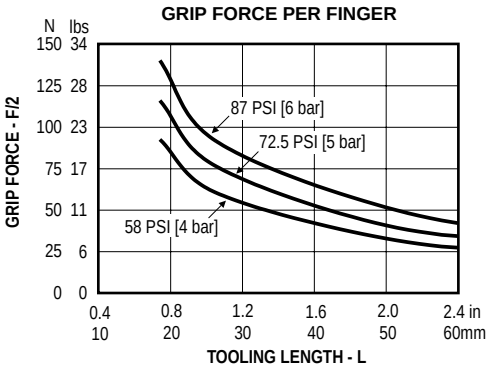


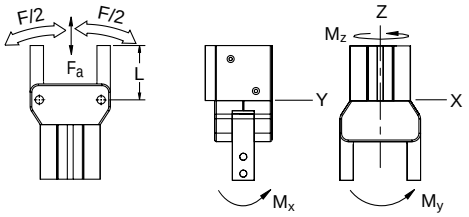


### Maximum Loading Capacity

| Load | Static | |
|---|---|---|
| Axial Forces (Fa) | 40 lbs | 175 N |
| Moment (Mx) | 49.5 in-lbs | 5.5 Nm |
| Moment (My) | 49.5 in-lbs | 5.5 Nm |
| Moment (Mz) | 37.8 in-lbs | 4.5 Nm |

## Dimensional Information

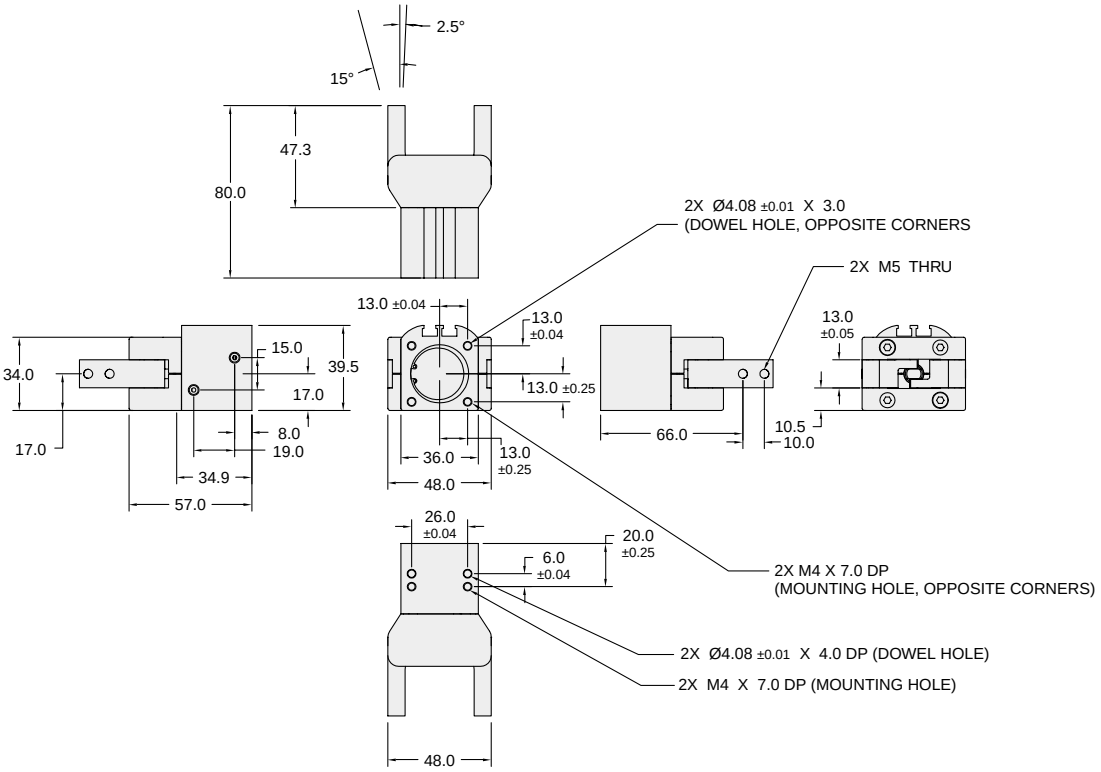


**Dimensions in mm.**



**Parker Hannifin Corporation**
Actuator Division
Wadsworth, Ohio USA

## P5G-AA5

| | | |
|---|---|---|
| Total Grip Force (0.7 Mpa @ 25 mm) | 108.2 lbs | 481.4 N |
| Stroke (Degree) | -5 to +30 | |
| Weight | .90 lbs | 0.4 kg |
| Bore Size | 1.25 in | 32 mm |
| Cylinder Volume | 0.58 $in^3$ | 9.5 $cm^3$ |
| Repeatability | ± 0.003 in | ± 0.076 mm |
| Temperature Range* | -4° to 180° F | -20° to 82° C |
| Pressure Range | 4-100 psi | 0.3-7 bar |
| Filtration Requirement | 40 micron (dry air) | |

* Fluorocarbon seals available for high temperature applications

***Note: See model code and ordering information page for complete part number selection.***

## Loading Information

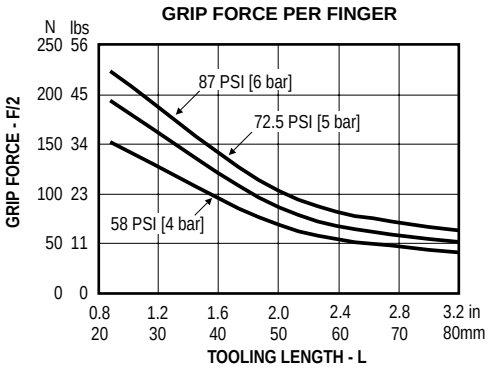


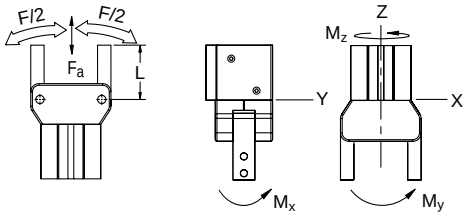


### Maximum Loading Capacity

| Load | Static | |
|---|---|---|
| Axial Forces (Fa) | 69.9 lbs | 306 N |
| Moment (Mx) | 76.4 in-lbs | 8.5 Nm |
| Moment (My) | 80.9 in-lbs | 9 Nm |
| Moment (Mz) | 53.1 in-lbs | 5.9 Nm |

## Dimensional Information

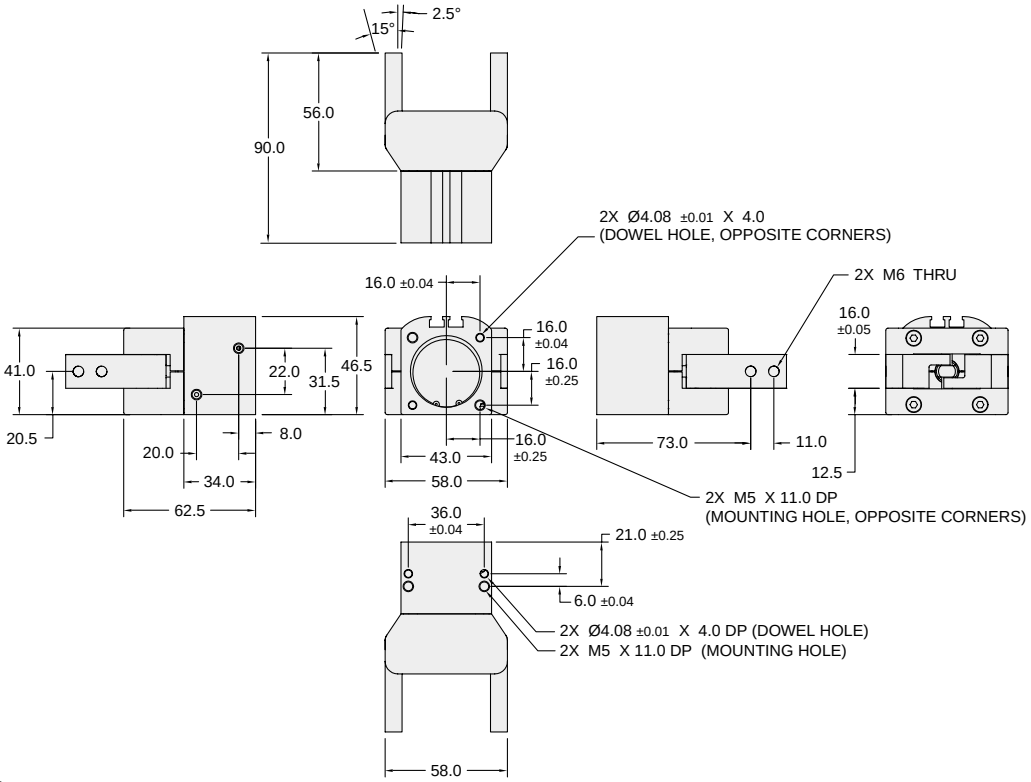


**Dimensions in mm.**



**Parker Hannifin Corporation**
Actuator Division
Wadsworth, Ohio USA

# P5G-AA6

| | | |
|---|---|---|
| Total Grip Force (0.7 Mpa @ 25 mm) | 198.1 lbs | 881.6 N |
| Stroke (Degree) | -5 to +30 | |
| Weight | 1.28 lbs | 0.58 kg |
| Bore Size | 1.57 in | 40 mm |
| Cylinder Volume | 0.92 $in^3$ | 15.07 $cm^3$ |
| Repeatability | ± 0.003 in | ± 0.076 mm |
| Temperature Range* | -4° to 180° F | -20° to 82° C |
| Pressure Range | 4-100 psi | 0.3-7 bar |
| Filtration Requirement | 40 micron (dry air) | |

* Fluorocarbon seals available for high temperature applications

***Note: See model code and ordering information page for complete part number selection.***

## Loading Information

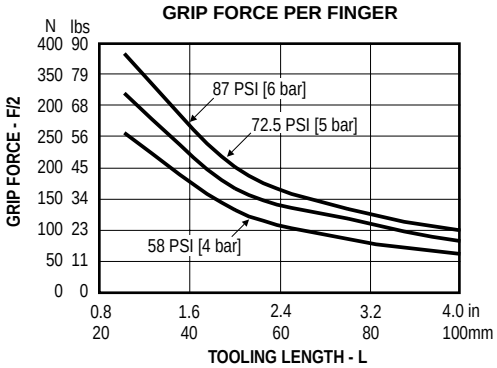


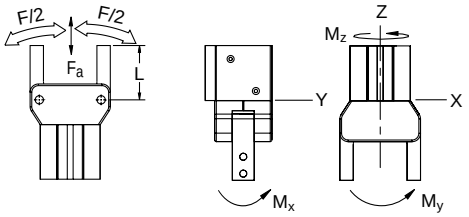


### Maximum Loading Capacity

| Load | Static | |
|---|---|---|
| Axial Forces (Fa) | 110.1 lbs | 482 N |
| Moment (Mx) | 116.9 in-lbs | 13 Nm |
| Moment (My) | 123.2 in-lbs | 13.7 Nm |
| Moment (Mz) | 75.5 in-lbs | 8.4 Nm |

## Dimensional Information

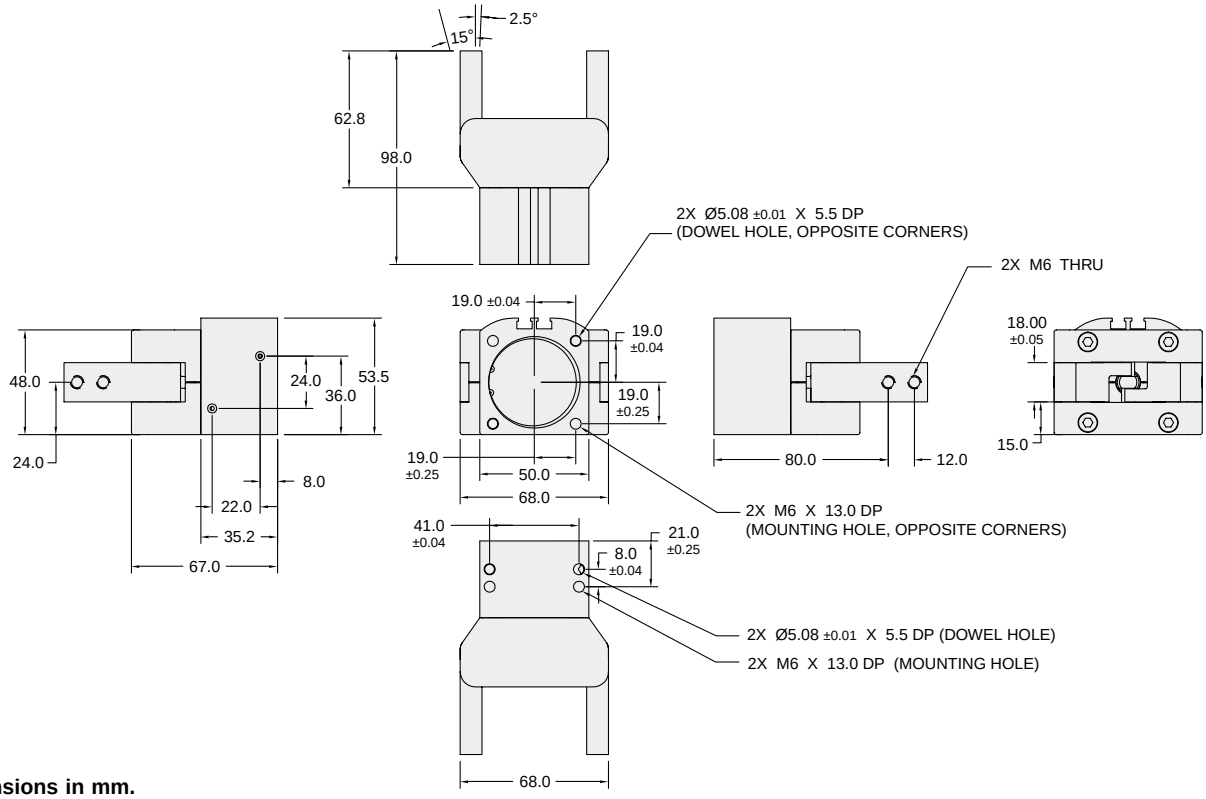


**Dimensions in mm.**





**Parker Hannifin Corporation**
Actuator Division
Wadsworth, Ohio USA

## Right Angle Flow Control (3)

Right angle flow control valves allow precise adjustment of speed by metering exhaust air flow. Presto-Lok push-in ports provide 360° orientation capability.

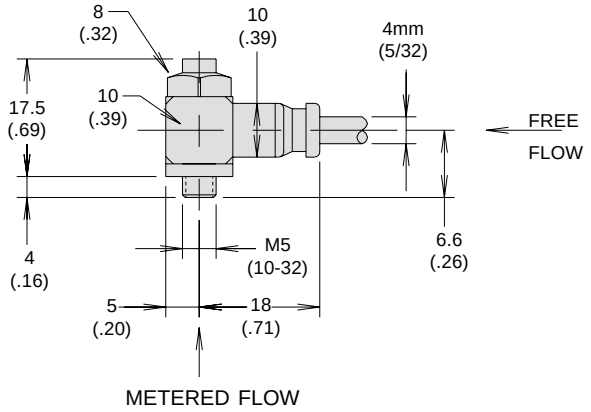


## Spring Return (C)

The spring return option allows for an automatic reset and jaw return. Selecting the spring return option creates a single-acting gripper component that may reduce the number of directional control valves needed to operate automated machinery.

### Dimensions

Spring return will increase body length on the ***Size 3 models only.*** See drawing at right.

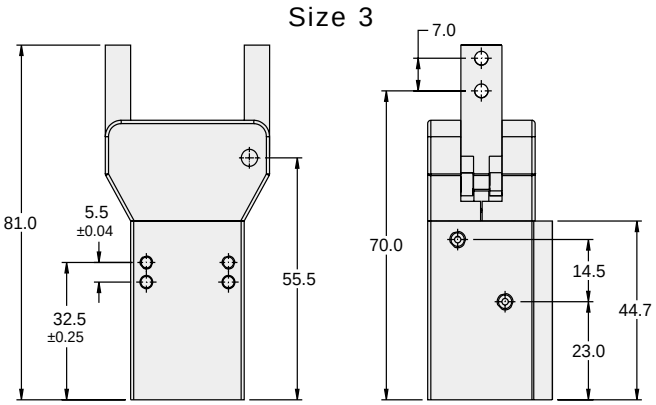


### Gripping Force

Total grip force (F) is defined as the sum of the forces applied by both jaws. Distance (L) is the distance from the pivot of the gripper to the center of the contact on the workpiece.

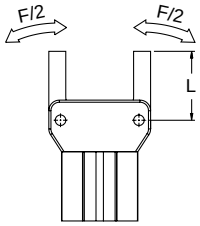


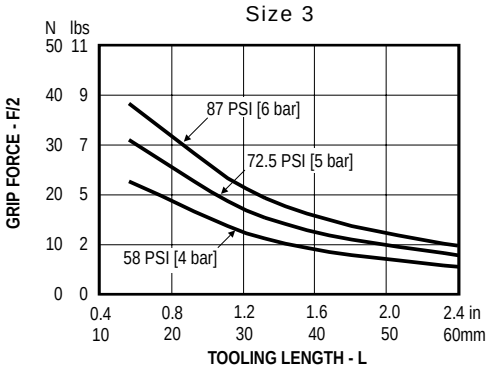


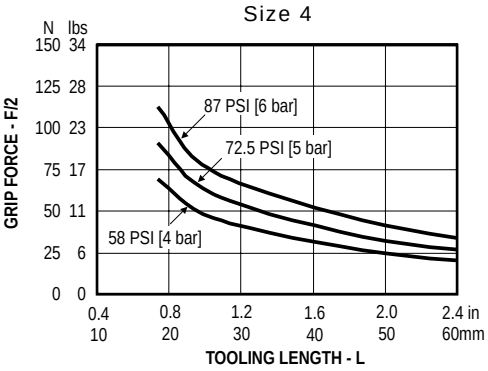


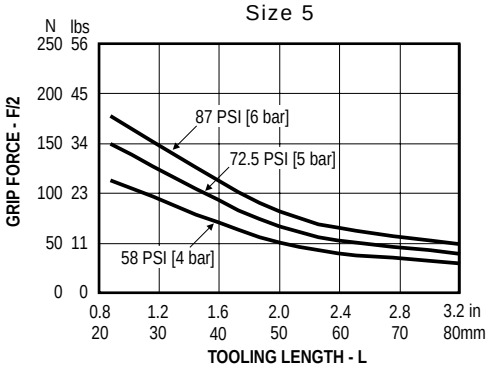


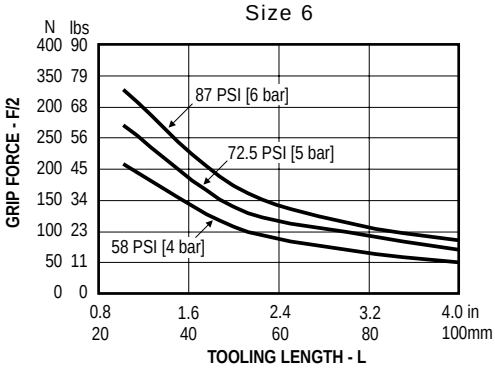




**Parker Hannifin Corporation**
Actuator Division
Wadsworth, Ohio USA

## Proximity Sensors
## Prox Ready (PJ)

Proximity sensors provide feedback on the position of the gripper fingers by sensing the metal screw that is attached to the gripper jaw. The sensor is adjustable along the full travel of the steel screw and is held in place by the set screw.

Care should be taken when adjusting the sensor so that the adjustable screw does not physically contact the sensor. Distance from the screw to the sensor should be approximately 1 mm (0.04 inches).

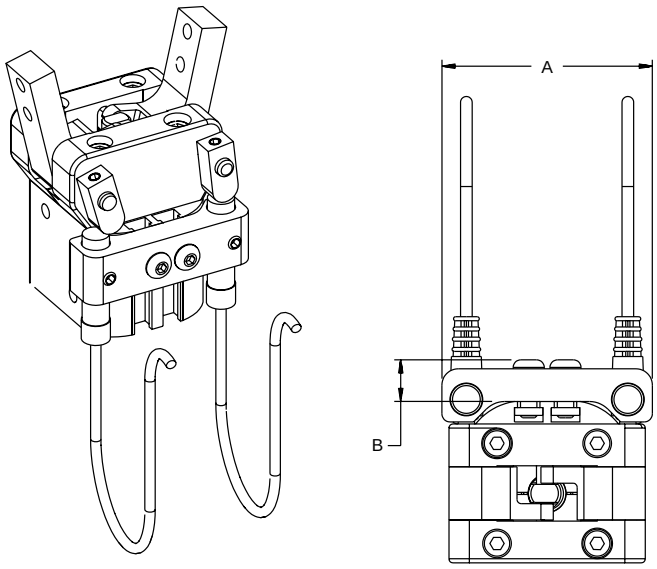


Dimensions (mm)

| Size | A | B |
|---|---|---|
| 3 | 42 | 10.3 |
| 4 | 51.5 | 10.2 |
| 5 | 59 | 10.2 |
| 6 | 66 | 10.2 |

## Reed and Hall Effect Sensors

Reed or Hall effect sensors mount in the sensor mounting grooves located in the gripper body. A magnetic piston is standard for ease of field addition of sensors.

See Sensors section for specifications.

**Short Sensors**

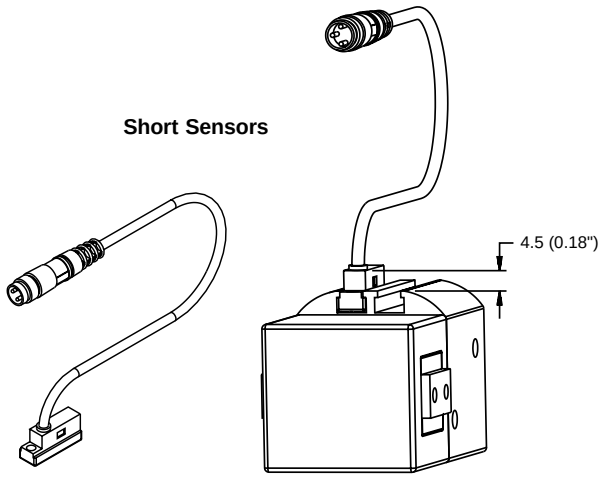


**Standard Sensors**

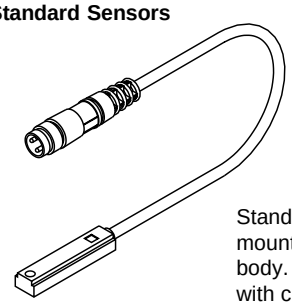

Standard sensors mount flush to the body. Sensor shown with connector. Lead wires also available.

## Fluorocarbon Seals (V)

Standard abrasion resistant nitrile seals should be used for general purpose applications with temperatures of -18° to 82°C (0° to 180°F). Fluorocarbon seals are recommended for high temperature applications up to 121°C (250°F). The items shown in the table should be considered when planning high temperature applications.

| | Temperature Range |
|---|---|
| Magnets | -27° to 130°C (-16° to 266°F) |
| Bumpers | -27° to 90°C (-16° to 195°F) |
| Sensors | -25° to 75°C (-13° to 167°F) |
| Proximity Sensors | -25° to 70°C (-13° to 158°F) |





**Parker Hannifin Corporation**
Actuator Division
Wadsworth, Ohio USA

## Model Code and Ordering Information

P5G – A A 4 B A N HB S – A

**Global Pneumatic Grippers**

P5G

**Series**

A – Automation

**Type**

A – 30° Angular

**Size**

3 – 16 mm
4 – 25 mm
5 – 32 mm
6 – 40 mm

**Ports**

B – M5 Female
3 – Prestolok Flow Control 4mm (5/32”) tube diameter

**Function**

A – Standard

**Spring Option**

C – Spring Return
N – No Spring

**Sensors**

NN – No Sensors
PJ – Proximity Sensor Ready

**Standard Hall Effect**
HA – (2) NPN w/Plug*
HB – (2) PNP w/Plug*
HC – (1) NPN w/Plug*
HD – (1) PNP w/Plug*
HE – (2) NPN w/o Plug**
HF – (2) PNP w/o Plug**
HG – (1) NPN w/o Plug**
HK – (1) PNP w/o Plug**

**Short Hall Effect**
HV – (2) PNP w/Plug*
HY – (1) PNP w/Plug*
KB – (2) PNP w/o Plug**
KD – (1) PNP w/o Plug**

**Standard Reed**
RA – (2) w/Plug*
RB – (1) w/Plug*
RC – (2) w/o Plug**
RD – (1) w/o Plug**

**Proximity**
PA – (2) NPN Plug-in †
PB – (2) PNP Plug-in †
PC – (1) NPN Plug-in †
PD – (1) PNP Plug-in †
PE – (2) NPN Potted ‡
PF – (2) PNP Potted ‡
PG – (1) NPN Potted ‡
PK – (1) PNP Potted ‡

* 0.27m cable
** 3m cable

† 5m cable
‡ 6m lead

**Seals**

S – Standard
F – Fluorocarbon

**Design Series**

A – Current Design Series

## Seal Kits

| Size | Nitrile Seal Kit | Fluorocarbon Seal Kit |
|---|---|---|
| P5G-AA3 | PSK-P5GAA3 | PSK-P5GAA3-F |
| P5G-AA4 | PSK-P5GAA4 | PSK-P5GAA4-F |
| P5G-AA5 | PSK-P5GAA5 | PSK-P5GAA5-F |
| P5G-AA6 | PSK-P5GAA6 | PSK-P5GAA6-F |



**Parker Hannifin Corporation**
Actuator Division
Wadsworth, Ohio USA

## Features

**Body**
Permanently sealed, anodized aluminum to provide maximum corrosion resistance.

**Jaws**
Available in short and long configurations with tapped through-holes and dowel pin holes.

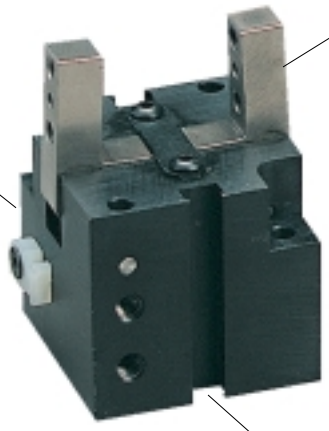

**Fail Safe Option**
Internal springs act in the closed position to ensure that the part remains clamped in the event of a power failure.

**Contaminant Tolerance**
Sealed design resists internal contamination.

**Seals**
Self lubricating dynamic seals (Nitrile only)

**Dowel Pin Holes**
Press fit dowels located in gripper body and jaws.

**Sensors**
Sensor grooves allow easy installation, adjustment of magneto resistive sensor. Magnetic piston is standard.



## Operation

Operating Characteristic ..... Double acting, spring closed
Gripping Force @ 100 PSI ..... 7 - 522 lbs
Stroke ..... -3° to +30°
Operating Pressure Range ..... 44 - 116 PSI (3 - 8 bar)

## Mounting

Grippers can be mounted and operated in any orientation.

Gripper can be mounted on three faces and locates with dowel pin holes for accuracy.

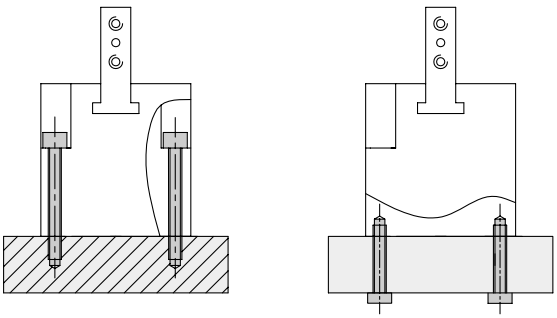

**Warning!** Protect drive and bearing mechanism from falling debris when mounted with fingers up.

## Contents

P5G-RK1 ..... 162
P5G-RK2 ..... 163
P5G-RK3 ..... 164
P5G-RK4 ..... 165
P5G-RK5 ..... 166
Jaw Option ..... 167
Spring Assist Option ..... 167
Dust Cover Option ..... 167
Ordering Information ..... 168
Seal Kits ..... 168



**Parker Hannifin Corporation**
Actuator Division
Wadsworth, Ohio USA

# P5G-RK1

| | | |
|---|---|---|
| Total Grip Force (0.7 Mpa @ 25 mm) | 7.4 lbs | 33 N |
| Total Stroke (Degree) | -3 to +30 | |
| Weight w/ flat jaw carrier | 0.176 lbs | 0.08 kg |
| Weight w/ square jaw carrier | 0.198 lbs | 0.09 kg |
| Bore Size | 0.6299 in | 16 mm |
| Cylinder Volume | 0.045 $in^3$ | 0.75 $cm^3$ |
| Repeatability | ± 0.002 in | ± 0.05 mm |
| Temperature Range | -4° to 158° F | -20° to 70° C |
| Pressure Range | 43.5-116 psi | 3-8 bar |
| Filtration Requirement | 40 micron (dry air) | |

***Note: See model code and ordering information page for complete part number selection.***

## Loading Information

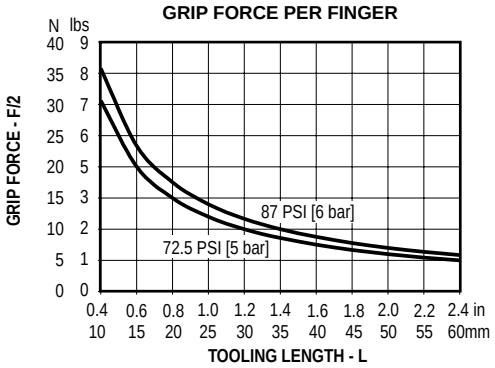


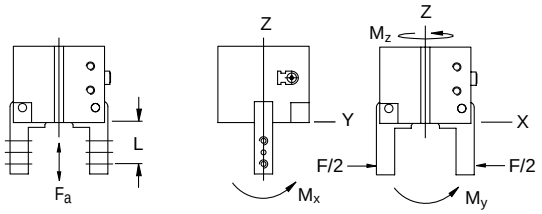


### Maximum Loading Capacity

| Load | Static | |
|---|---|---|
| Axial Forces (Fx) | 7.64 lbs | 34 N |
| Moment (Mx) | 10.6 in-lbs | 1.2 Nm |
| Moment (My) | 10.6 in-lbs | 1.2 Nm |
| Moment (Mz) | 6.19 in-lbs | 0.7 Nm |

## Dimensional Information

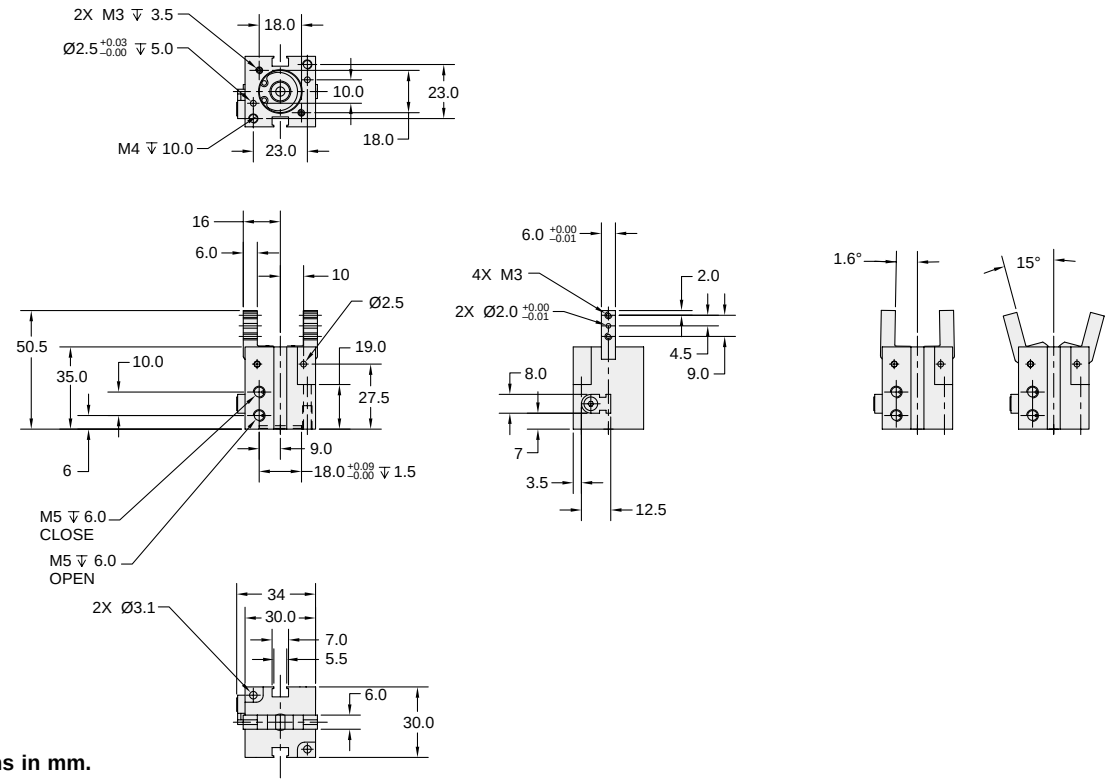


**Dimensions in mm.**



**Parker Hannifin Corporation**
Actuator Division
Wadsworth, Ohio USA

# P5G-RK2

| | | |
|---|---|---|
| Total Grip Force (0.7 Mpa @ 25 mm) | 27.3 lbs | 121.8 N |
| Total Stroke (Degree) | -4 to +30 | |
| Weight w/ flat jaw carrier | 0.418 lbs | 0.19 kg |
| Weight w/ square jaw carrier | 0.44 lbs | 0.2 kg |
| Bore Size | 0.984 in | 25 mm |
| Cylinder Volume | 0.167 $in^3$ | 2.75 $cm^3$ |
| Repeatability | ± 0.002 in | ± 0.05 mm |
| Temperature Range | -4° to 158° F | -20° to 70° C |
| Pressure Range | 43.5-116 psi | 3-8 bar |
| Filtration Requirement | 40 micron (dry air) | |

***Note: See model code and ordering information page for complete part number selection.***

## Loading Information

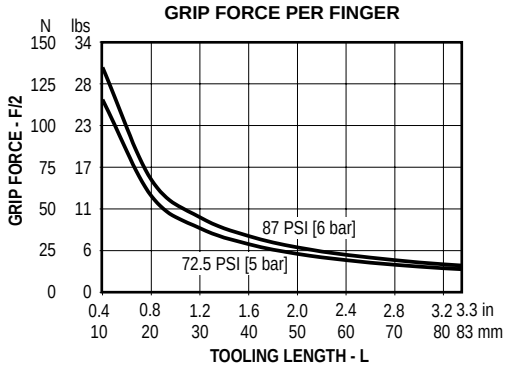


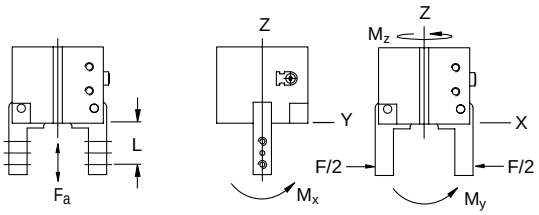


### Maximum Loading Capacity

| Load | Static | |
|---|---|---|
| Axial Forces (Fx) | 35.9 lbs | 160 N |
| Moment (Mx) | 40.7 in-lbs | 4.6 Nm |
| Moment (My) | 40.7 in-lbs | 4.6 Nm |
| Moment (Mz) | 23.8 in-lbs | 2.7 Nm |

## Dimensional Information

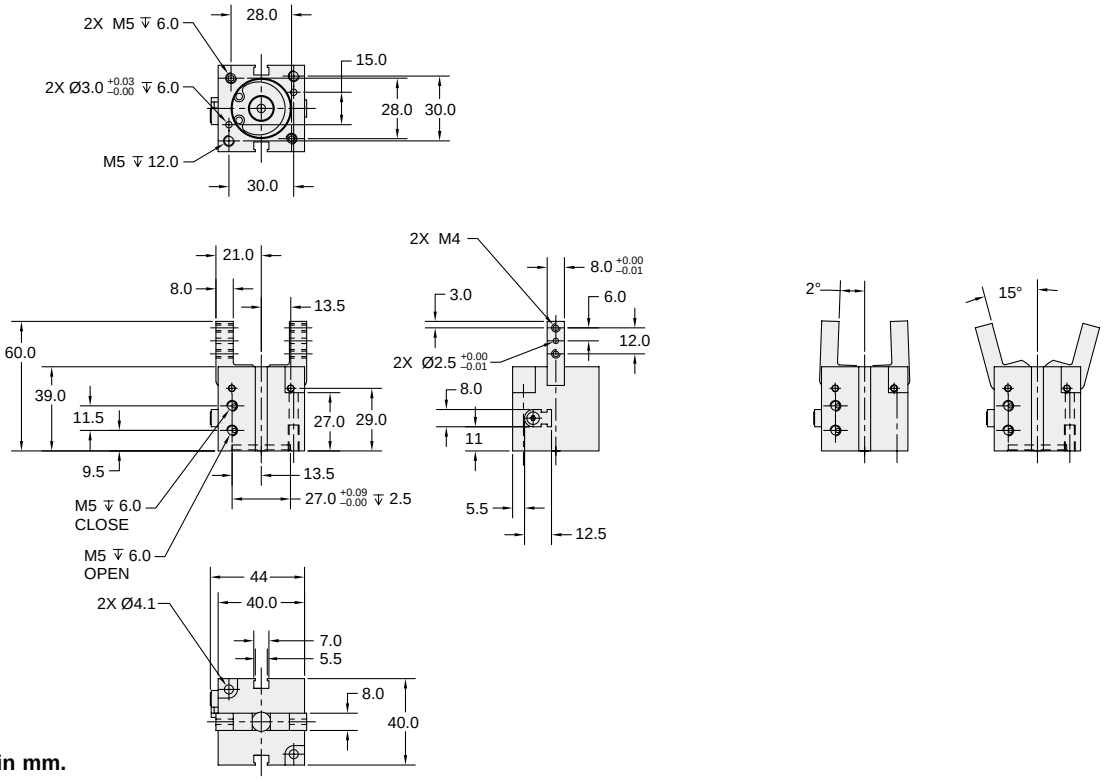


**Dimensions in mm.**





**Parker Hannifin Corporation**
Actuator Division
Wadsworth, Ohio USA

# P5G-RK3

| | | |
|---|---|---|
| Total Grip Force (0.7 Mpa @ 25 mm) | 123.8 lbs | 551 N |
| Total Stroke (Degree) | -5 to +30 | |
| Weight w/ flat jaw carrier | 0.837 lbs | 0.38 kg |
| Weight w/ square jaw carrier | 0.925 lbs | 0.42 kg |
| Bore Size | 1.57 in | 40 mm |
| Cylinder Volume | 0.72 $in^3$ | 11.8 $cm^3$ |
| Repeatability | ± 0.002 in | ± 0.05 mm |
| Temperature Range | -4° to 158° F | -20° to 70° C |
| Pressure Range | 43.5-116 psi | 3-8 bar |
| Filtration Requirement | 40 micron (dry air) | |

***Note: See model code and ordering information page for complete part number selection.***

## Loading Information

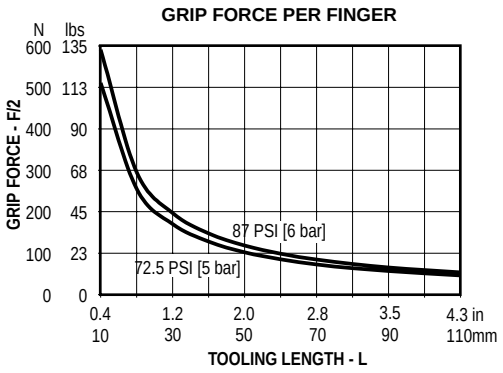


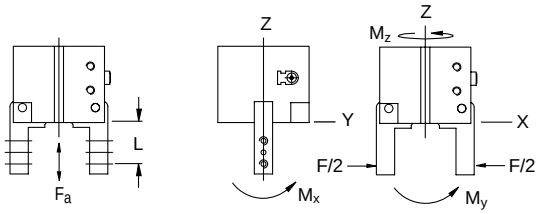


### Maximum Loading Capacity

| Load | Static | |
|---|---|---|
| Axial Forces (Fx) | 58.45 lbs | 260 N |
| Moment (Mx) | 169 in-lbs | 19.2 Nm |
| Moment (My) | 169 in-lbs | 19.2 Nm |
| Moment (Mz) | 105 in-lbs | 11.9 Nm |

## Dimensional Information

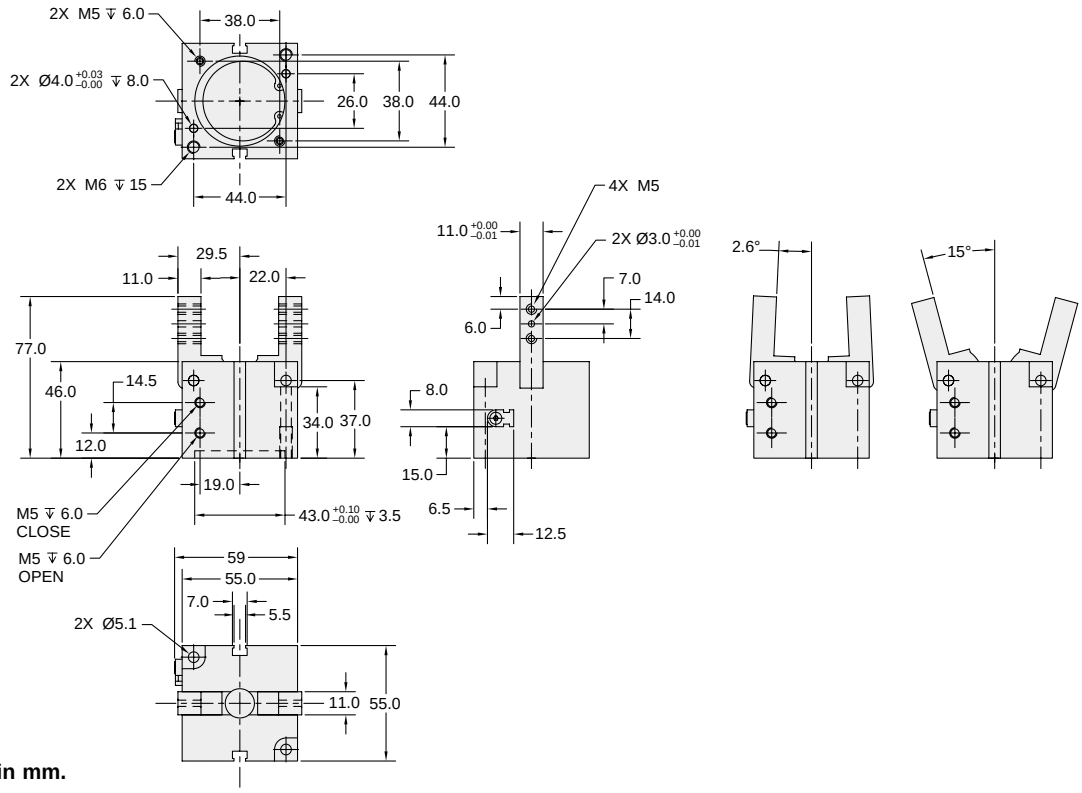


**Dimensions in mm.**



**Parker Hannifin Corporation**
Actuator Division
Wadsworth, Ohio USA

# P5G-RK4

| | | |
|---|---|---|
| Total Grip Force (0.7 Mpa @ 25 mm) | 234.7 lbs | 1044 N |
| Total Stroke (Degree) | -13 to +30 | |
| Weight w/ flat jaw carrier | 1.43 lbs | 0.65 kg |
| Weight w/ square jaw carrier | 1.60 lbs | 0.73 kg |
| Bore Size | 1.968 in | 50 mm |
| Cylinder Volume | 1.476 $in^3$ | 24.2 $cm^3$ |
| Repeatability | ± 0.002 in | ± 0.05 mm |
| Temperature Range | -4° to 158° F | -20° to 70° C |
| Pressure Range | 43.5-116 psi | 3-8 bar |
| Filtration Requirement | 40 micron (dry air) | |

***Note: See model code and ordering information page for complete part number selection.***

## Loading Information

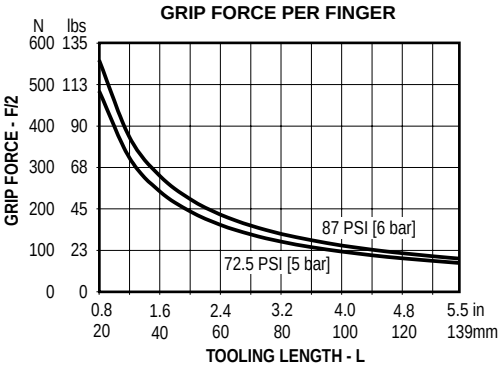


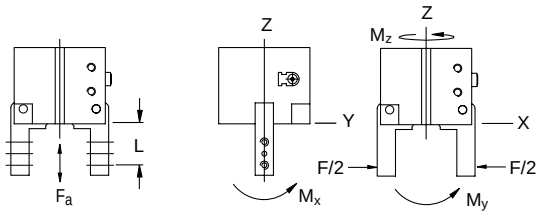


### Maximum Loading Capacity

| Load | Static | |
|---|---|---|
| Axial Forces (Fx) | 107.9 lbs | 480 N |
| Moment (Mx) | 318.6 in-lbs | 36 Nm |
| Moment (My) | 318.6 in-lbs | 36 Nm |
| Moment (Mz) | 198.2 in-lbs | 22.4 Nm |

## Dimensional Information

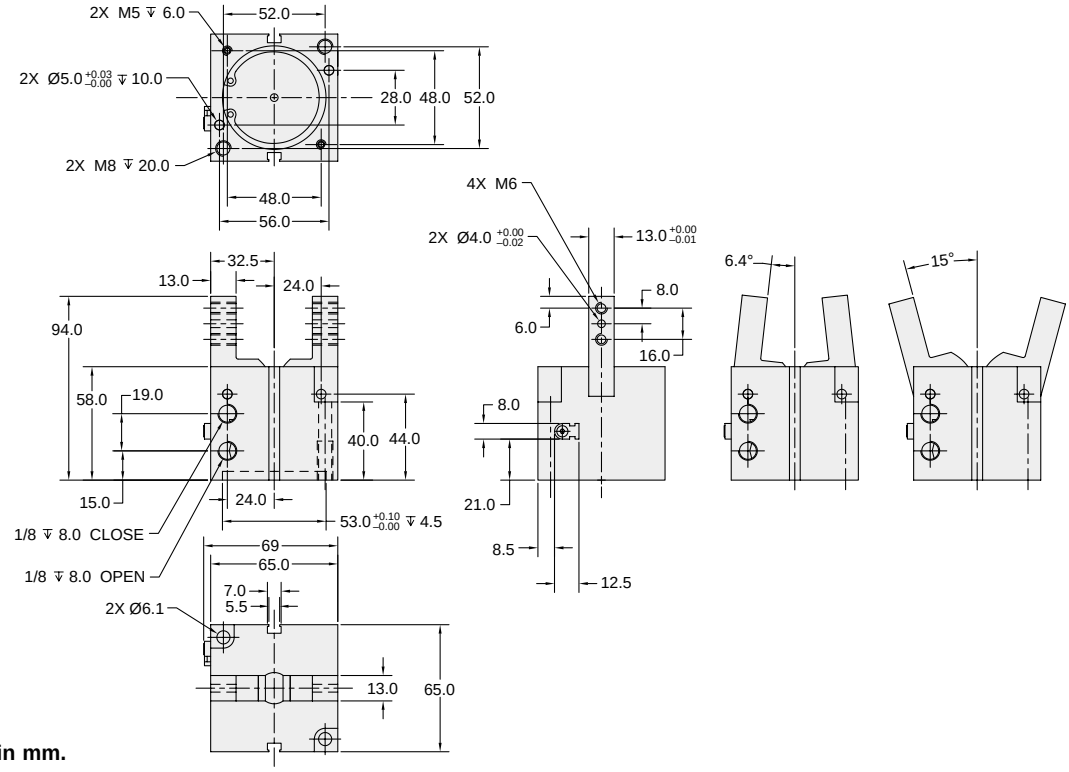


**Dimensions in mm.**





**Parker Hannifin Corporation**
Actuator Division
Wadsworth, Ohio USA

## P5G-RK5

| | | |
|---|---|---|
| Total Grip Force (0.7 Mpa @ 25 mm) | 521.5 lbs | 2320 N |
| Total Stroke (Degree) | -13 to +30 | |
| Weight w/ flat jaw carrier | 2.57 lbs | 1.17 kg |
| Weight w/ square jaw carrier | 2.86 lbs | 1.30 kg |
| Bore Size | 2.48 in | 63 mm |
| Cylinder Volume | 3.27 $in^3$ | 53.6 $cm^3$ |
| Repeatability | ± 0.002 in | ± 0.05 mm |
| Temperature Range | -4° to 158° F | -20° to 70° C |
| Pressure Range | 43.5-116 psi | 3-8 bar |
| Filtration Requirement | 40 micron (dry air) | |

***Note: See model code and ordering information page for complete part number selection.***

## Loading Information

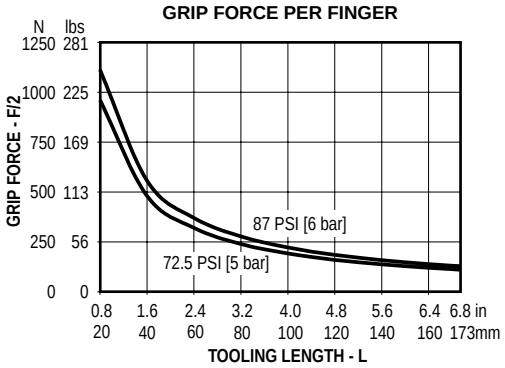


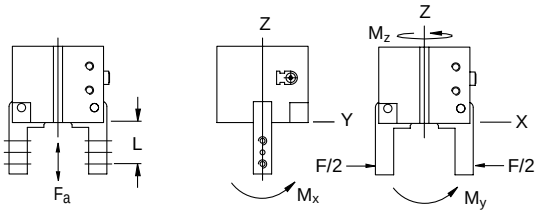


### Maximum Loading Capacity

| | Static | |
|---|---|---|
| Axial Forces (Fx) | 139.3 lbs | 620 N |
| Moment (Mx) | 647.8 in-lbs | 73.2 Nm |
| Moment (My) | 647.8 in-lbs | 73.2 Nm |
| Moment (Mz) | 393.8 in-lbs | 44.5 Nm |

## Dimensional Information

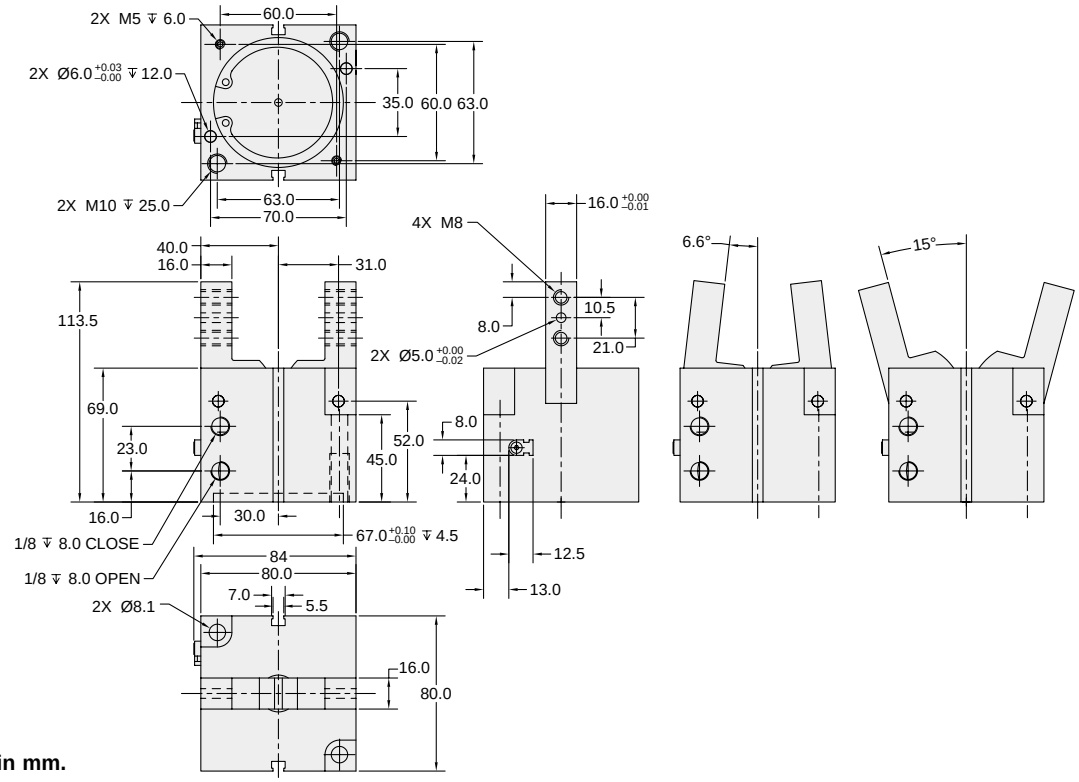


**Dimensions in mm.**



**Parker Hannifin Corporation**
Actuator Division
Wadsworth, Ohio USA

## Jaw Style Option (K, C)

Two jaw styles are available, Long (K) and Short (C). The long style is standard and allows for mounting on the edge of the jaw. The short fingers allow for mounting on the face of the jaw. See dimensional information below for short fingers.

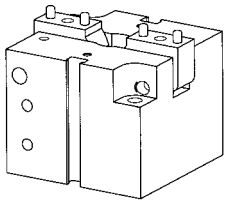

**Short Jaw (C)**

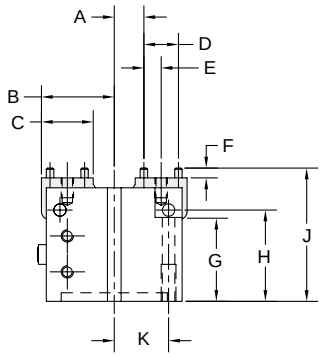


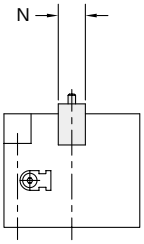


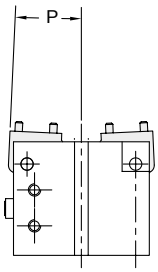


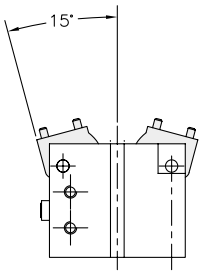


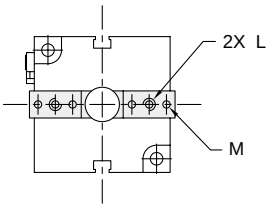


### Short Jaw Dimensions (mm)

| Model | A | B | C | D | E | F | G | H | J | K | L | ØM | N | P |
|---|---|---|---|---|---|---|---|---|---|---|---|---|---|---|
| P5G-RC1 | 7 | 17.5 | 12 | 9 | 4.5 | 2.5 | 19 | 27.5 | 40 | 10 | M3 x 5 dp | 2 | 6 | 1.6º |
| P5G-RC2 | 9.5 | 23.5 | 16 | 12 | 6 | 3.5 | 27 | 29 | 45.5 | 13.5 | M4 x 6.5 dp | 2.5 | 8 | 2º |
| P5G-RC3 | 12 | 29.5 | 21 | 14 | 7 | 4 | 34 | 37 | 54 | 22 | M5 x 8 dp | 3 | 11 | 2.6º |
| P5G-RC4 | 13 | 32.5 | 23 | 16 | 8 | 5 | 40 | 44 | 68 | 24 | M6 x 12 dp | 4 | 13 | 6.4º |
| P5G-RC5 | 15.5 | 40 | 28 | 21 | 10.5 | 6 | 45 | 52 | 81 | 31 | M8 x 15 dp | 5 | 16 | 6.6º |

## Spring Assist Option (F)

The spring assist option allows for an automatic reset and jaw return. Selecting the spring assist option creates a single-acting gripper which may reduce the number of directional control valves needed to operate automated machinery. The spring assist option also allows the fingers to return to the closed position when pressure is lost during a power failure.

| Size | Spring Force lbs | Spring Force N |
|---|---|---|
| 1 | 2.2 | 10 |
| 2 | 5.6 | 25 |
| 3 | 17.9 | 80 |
| 4 | 24.7 | 110 |
| 5 | 40.4 | 180 |

## Dust Cover (A)

A dust cover can be added to prevent machining chip contaminants from entering the working mechanism of the gripper. This dust cover is also ideal for dusty and dirty environments





**Parker Hannifin Corporation**
Actuator Division
Wadsworth, Ohio USA

## Model Code and Ordering Information

| P5G | – | R | K | 1 | B | 0 | C | 00 | 033 |
|---|---|---|---|---|---|---|---|---|---|

**Type**
P5G – Pneumatic Gripper

**Series**
R – Robotic

**Jaw Style**
K – Long Jaws (Standard)
C – Short Jaws

**Size**
1 – 16 mm Bore
2 – 25 mm Bore
3 – 40 mm Bore
4 – 50 mm Bore
5 – 63 mm Bore

**Port Size**
B – M5 holes for sizes 1, 2 and 3
C – G1/8 holes for sizes 4 and 5

**Spring**
0 – No Spring (Standard)
F – Spring Assist

**Dust Cover**
C – No Dust Cover (Standard)
A – Dust Cover

**Function**
00 – Standard

**Angle**
033 – Size 1
034 – Size 2
035 – Size 3
043 – Size 4
043 – Size 5

## Seal Kits

| Size | Nitrile Seal Kit |
|---|---|
| P5G-RK1 | PSK-RK1 |
| P5G-RK2 | PSK-RK2 |
| P5G-RK3 | PSK-RK3 |
| P5G-RK4 | PSK-RK4 |
| P5G-RK5 | PSK-RK5 |

## Features

**Body**
One piece hard coat anodized aluminum body with Teflon® impregnation.

**Dowel Pin Holes**
Slip fit dowels located in gripper body and jaws.

**Optional Proximity Sensors**
Read position of jaw. (Sold separately)

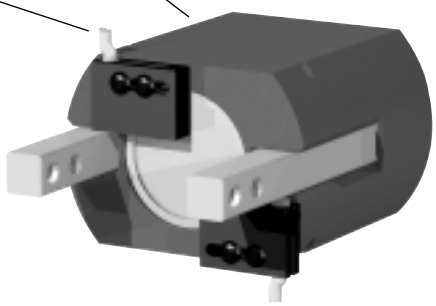

**Internal Components**
Internal components are made from hardened steels for maximum life.

**Locking Design**
Linkage design provides locking mechanism in closed position.

**Seals**
Self lubricating dynamic seals (Nitrile only)



## Operation

Operating Characteristic ..... Double acting, locking linkage design

Gripping Force @ 100 PSI ..... 62 - 220 lbs

Operating Pressure Range ..... 40 - 100 PSI (3 - 7 bar)

## Mounting

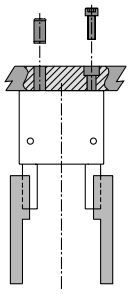

Gripper mounts using tapped holes and slip fit dowel pin holes.

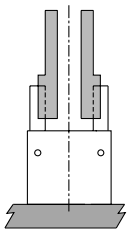

**WARNING!** Protect gripper internal mechanism from debris or contamination.

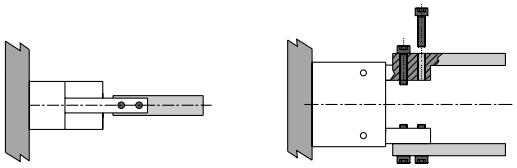

Custom finger tooling mounts using tapped holes and precise tolerancing of fingers.

## Contents

P5G-HA-15 ..... 170
P5G-HA-25 ..... 171
Metric Design Option ..... 172
Fluorocarbon Seals ..... 172
Ordering Information ..... 172
Seal Kits ..... 172



**Parker Hannifin Corporation**
Actuator Division
Wadsworth, Ohio USA

## P5G-HA-15M

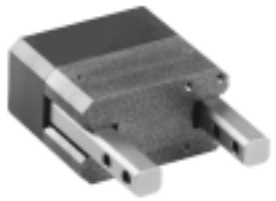

| | | |
|---|---|---|
| Total Grip Force (100 psi @ 1 in) | 62 lbs | 275.7 N |
| Total Stroke (Degree) | 12 | |
| Weight | 0.31 lbs | 0.14 kg |
| Bore Size | 0.750 in | 19.1 mm |
| Cylinder Volume | 0.110 $in^3$ | 1.8 $cm^3$ |
| Repeatability | ± 0.001 in | ± 0.03 mm |
| Temperature Range* | -30º to 180º F | -35º to 80º C |
| Pressure Range | 40-100 psi | 3-7 bar |
| Filtration Requirement | 40 micron (dry air) | |

* Fluorocarbon seals available for high temperature applications

***Note: See model code and ordering information page for complete part number selection.***

## Loading Information

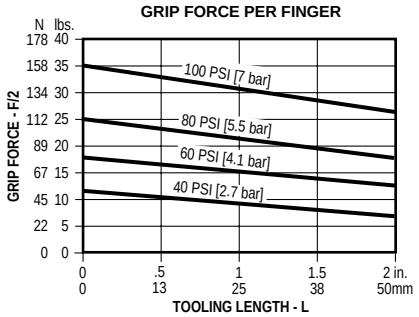


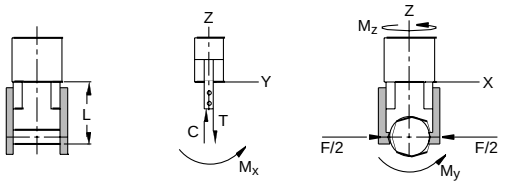


### Maximum Loading Capacity

| Load | Static | | Dynamic | |
|---|---|---|---|---|
| Axial Forces (C,T) | 50 lbs | 222 N | 20 lbs | 89 N |
| Moment (Mx) | 60 in-lbs | 6.8 Nm | 20 in-lbs | 2.3 Nm |
| Moment (My) | 120 in-lbs | 13.6 Nm | 40 in-lbs | 4.5 Nm |
| Moment (Mz) | 60 in-lbs | 6.8 Nm | 20 in-lbs | 2.3 Nm |

## Dimensional Information

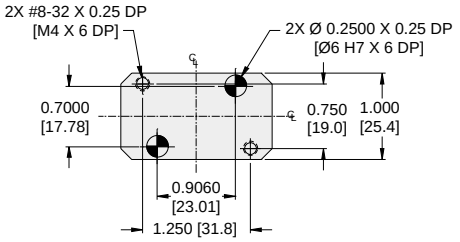


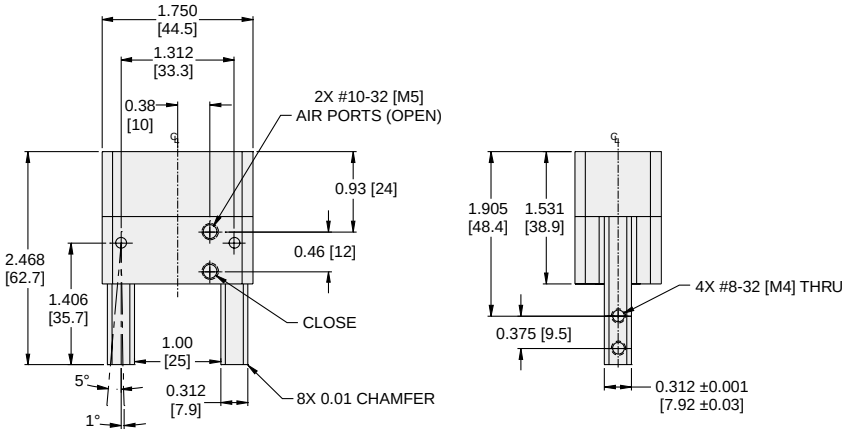


JAW SHOWN PARALLEL
JAW WILL CLOSE 1° PAST PARALLEL

**Dimensions in inch [mm].**



**Parker Hannifin Corporation**
Actuator Division
Wadsworth, Ohio USA

## P5G-HA-25M

| | | |
|---|---|---|
| Total Grip Force (100 psi @ 1 in) | 220 lbs | 978.6 N |
| Total Stroke (Degree) | 12 | |
| Weight | 1.06 lbs | 0.48 kg |
| Bore Size | 1.25 in | 31.8 mm |
| Cylinder Volume | 0.046 $in^3$ | 0.8 $cm^3$ |
| Repeatability | ± 0.001 in | ± 0.03 mm |
| Temperature Range* | -30º to 180º F | -35º to 80º C |
| Pressure Range | 40-100 psi | 3-7 bar |
| Filtration Requirement | 40 micron (dry air) | |

* Fluorocarbon seals available for high temperature application

***Note: See model code and ordering information page for complete part number selection.***

## Loading Information

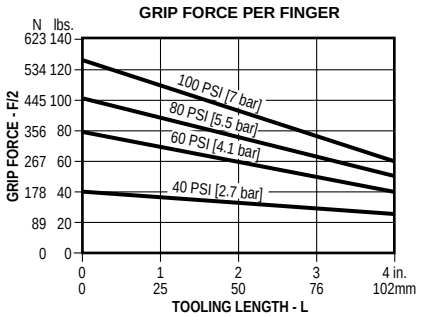


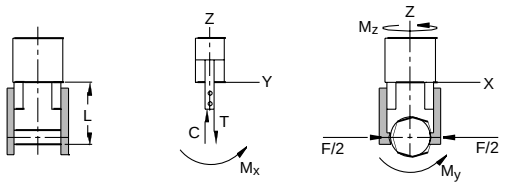


### Maximum Loading Capacity

| Load | Static | | Dynamic | |
|---|---|---|---|---|
| Axial Forces (C,T) | 150 lbs | 667 N | 50 lbs | 222 N |
| Moment (Mx) | 200 in-lbs | 22.6 Nm | 60 in-lbs | 6.8 Nm |
| Moment (My) | 300 in-lbs | 33.9 Nm | 75 in-lbs | 8.5 Nm |
| Moment (Mz) | 200 in-lbs | 22.6 Nm | 60 in-lbs | 6.8 Nm |



## Dimensional Information

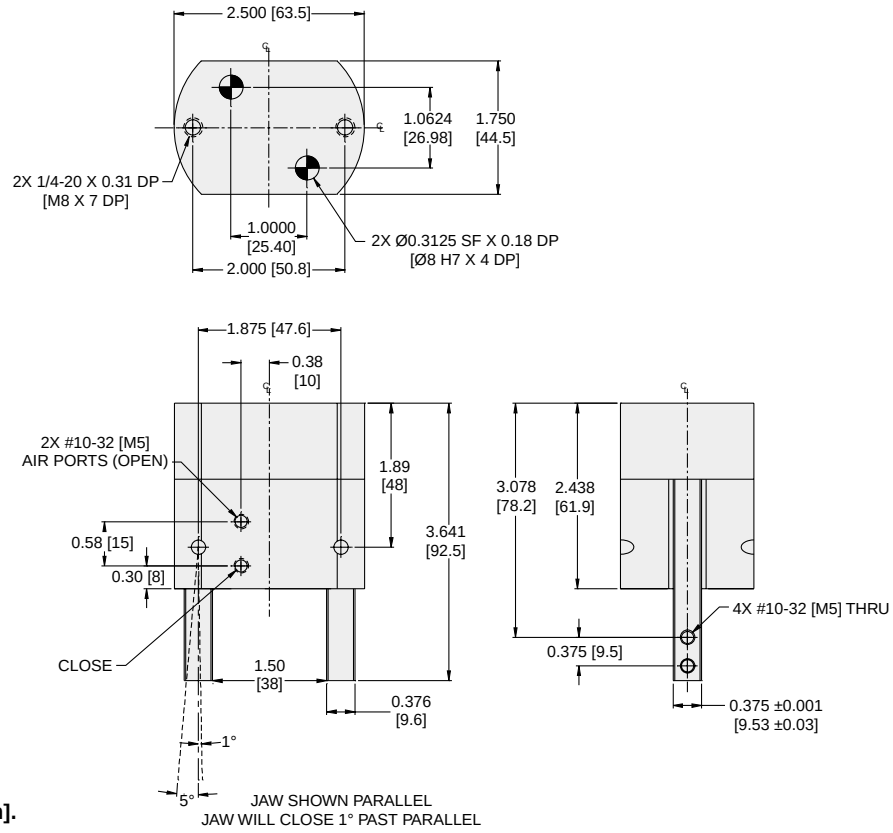


**Dimensions in inch [mm].**



**Parker Hannifin Corporation**
Actuator Division
Wadsworth, Ohio USA

## Metric Unit (M)

The standard unit is manufactured with imperial mounting and porting. When this option is specified, the gripper incorporates metric threads and ports.

Reference dimensional drawings for more details.

## Fluorocarbon Seals (V)

Standard nitrile seals should be used for general purpose applications with temperatures of –30° to 180° F (-35° to 80° C). Fluorocarbon seals are recommended for high temperature applications up to 250° F (120° C).

| Seal Type | Temperature Range |
|---|---|
| Standard Buna-N | -30° to 180°F (-35 to 80°C) |
| Fluorocarbon | -20° to 250°F (-30° to 120°C) |

## Model Code and Ordering Information

P5G – HA – 15 M – V

**Global Pneumatic Gripper**

P5G

**Series**

HA – 12° Locking

**Size**

15 – 3/4 inch Bore

25 – 1-1/4 inch Bore

**Mounting/Porting**

Omit – Imperial Units (Standard)

M – Metric Units

**Seals**

Omit – Nitrile Seals (Standard)

V – Fluorocarbon Seals

## Seal Kits

| Size | Nitrile Seal Kit | Fluorocarbon Seal Kit |
|---|---|---|
| P5G-HA-15 | PSK-P5G-HA-5 | PSK-P5G-HA-5V |
| P5G-HA-25 | PSK-P5G-HA-6 | PSK-P5G-HA-6V |

## Features

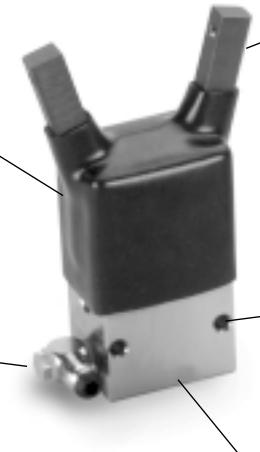

**Seals**
Self lubricating dynamic seals (Nitrile only)

**Dust Cover**
The dust cover works to prevent particulate contamination and is available in an oil resistant material.

**Jaws**
Constructed from through-hardened alloy steel to provide a high strength mounting surface for custom tooling.

**Mounting**
Standard mounting on three faces

**Right Angle Fitting**
Right angle fitting is standard. Two are supplied on the double acting model.

**Body**
Lightweight body is made from precision machined, nickel coated aluminum

## Operation

Operating Characteristic ..... Single or double acting, double piston option

Gripping Force @ 100 PSI ..... 538 N (121 lbs)

Operating Pressure Range ..... 20 - 145 PSI (1.5 - 10 bar)

## Mounting

Grippers can be mounted and operated in any orientation.

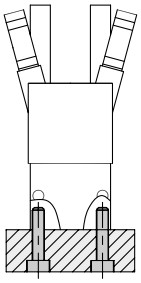

Gripper mounts with screws and locates with center pilot diameter for accuracy.

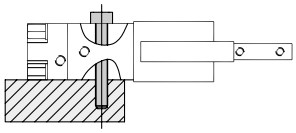

## Contents

3H2 ..... 174
Operating Options ..... 175
Sensors ..... 175
Ordering Information ..... 176





**Parker Hannifin Corporation**
Actuator Division
Wadsworth, Ohio USA

## 3H2-DN0100-D30

| | | |
|---|---|---|
| Total Grip Force (100 psi @ 2 in)* | 121 lbs | 538 N |
| Stroke (Degree) | 30 | |
| Weight | 1.2 lbs | 0.53 kg |
| Bore Size | 1 in | 25.4 mm |
| Cylinder Volume | 3.85 $in^3$ | 15 $cm^3$ |
| Repeatability | ± 0.001 in | ± 0.03 mm |
| Temperature Range | 32° to 149° F | 0° to 65° C |
| Pressure Range | 40-100 psi | 3-7 bar |
| Filtration Requirement | 40 micron (dry air) | |

* Data represents double-acting option.

***Note: See model code and ordering information page for complete part number selection.***

## Loading Information

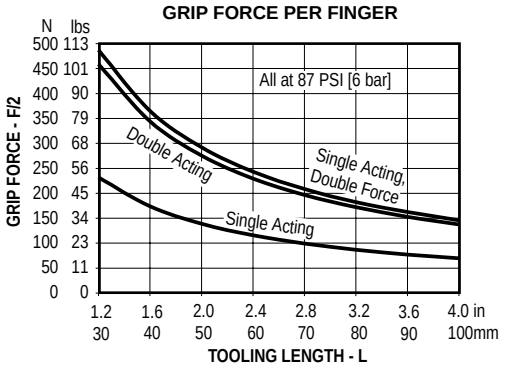


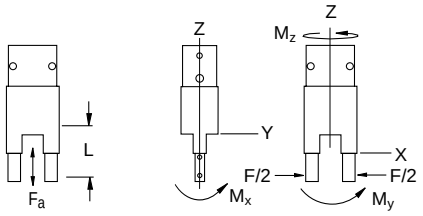


### Maximum Loading Capacity

| Loading Capacity | Static | |
|---|---|---|
| Axial Forces (Fa) | 99 lbs | 440 N |
| Moment (Mx) | 239 in-lbs | 27 Nm |
| Moment (My) | 239 in-lbs | 27 Nm |
| Moment (Mz) | 177 in-lbs | 20 Nm |

## Dimensional Information

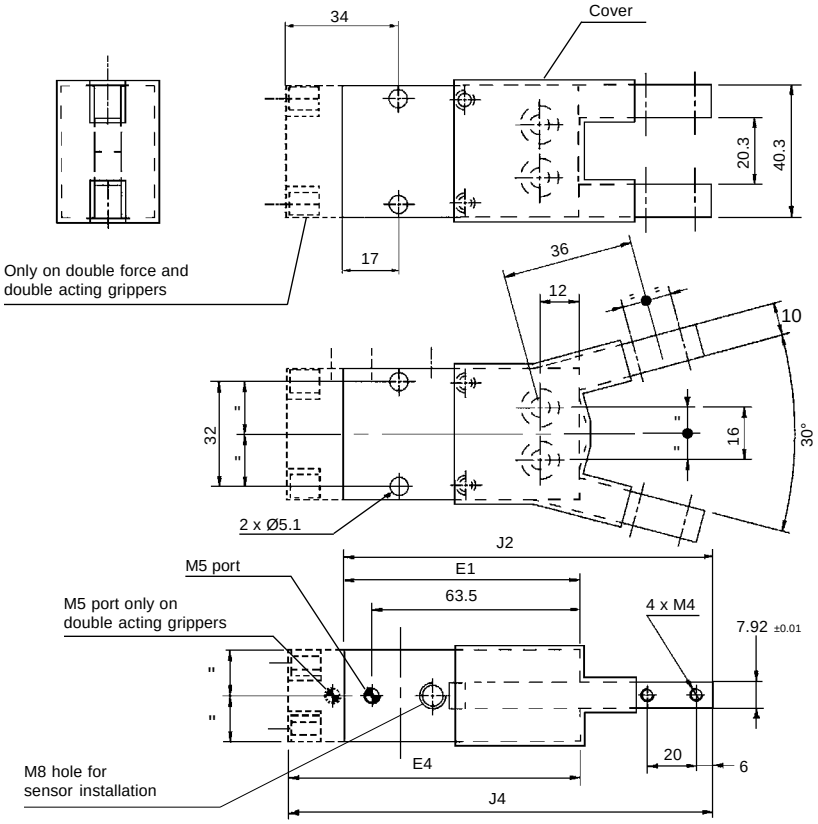


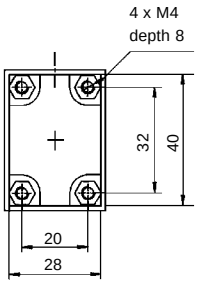


| Type | E1 | E4 | J2 | J4 |
|---|---|---|---|---|
| Single Acing | 72 | — | 112.5 | — |
| Single Acting, Double Force | — | 89 | — | 129.5 |
| Double Acting | — | 89 | — | 129.5 |

**Dimensions in mm.**



**Parker Hannifin Corporation**
Actuator Division
Wadsworth, Ohio USA

## Operating Options (S, B, D)

Three operating options are available.

- Single Acting (S)
- Single Acting, Double Force (B)
- Double Acting (D)

### Single Acting

The single acting option allows for an automatic reset and jaw return to the open position. See loading information chart for effective gripper loading.

### Double Force

A unique two-piston design allows for increased gripping force. See loading information for effective gripper loading.

## Protective Cover

The protective cover prevents machining chips and other contaminants from entering the working mechanism of the gripper. The optional translucent PVC cover is ideal for applications where cutting fluid is present.

## Proximity Sensor

Proximity sensors provide feedback on all positions of the gripper piston.

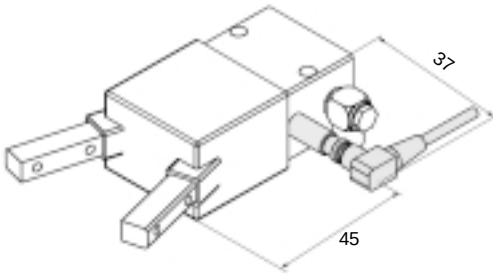






**Parker Hannifin Corporation**
Actuator Division
Wadsworth, Ohio USA

## Model Code and Ordering Information

| 3H2 | – | S | N0 | 10 | P | – | D30 |
|---|---|---|---|---|---|---|---|

**Series**
3H2

**Operating Characterists**
S – Single Acting
B – Single Acting, Double Force
D – Double Acting

**Action**
N0 – Standard

**Cover**
10 – Standard Cover
20 – PVC Oil Resistant Cover

**Proximity Sensors**
0 – None
P – PNP with Plug-in Connector
N – NPN Plugging Connector

**Type**
D30 – Standard

## Seal Kit

| Size | Nitrile Seal Kit |
|---|---|
| 3H2 | 3H2R3 |

## Features

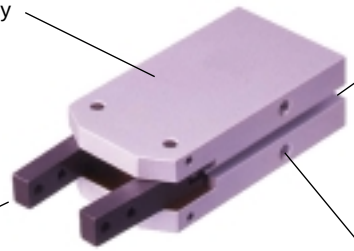

**Body**
One piece anodized aluminum body

**Sensors**
Sensor grooves allow for easy installation, adjustment of Hall effect sensor. Magnetic piston is standard.

**Jaws**
Made from carbon steel and precision machined to provide accurate and rigid mounting surface

**Mounting**
Standard mounting on three faces

**Seals**
Self lubricating dynamic seals (Nitrile only)

## Operation

Operating Characteristic ..... Double acting
Gripping Force @ 100 PSI ..... 22 - 240 N (5 - 53 lbs)
Stroke ..... -6° to +180°
Operating Pressure Range ..... 29 - 100 psi (2 - 7 bar)

### Not recommended for applications containing:

- Dirt or grit
- Machining chips
- Environments with loose particulate
- Mechanism lubricant that could cause contamination

## Mounting

Grippers can be mounted and operated in any orientation.

Gripper can be mounted on three faces. End mounting locates with center pilot diameter for accuracy. Side mounting locates with dowel pin holes for accuracy.

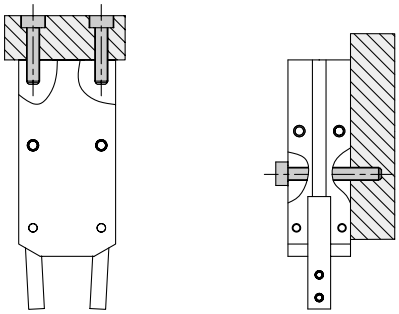

**Warning!**
Protect drive and bearing mechanism from falling debris when mounted with fingers up.

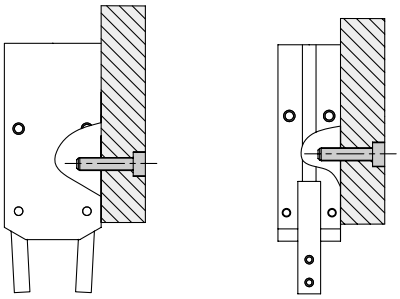

## Contents

GVH-12 ..... 178
GVH-16 ..... 179
GVH-20 ..... 180
GVH-25 ..... 181
Ordering Information ..... 182
Seal Kits ..... 182





**Parker Hannifin Corporation**
Actuator Division
Wadsworth, Ohio USA

# GVH-12

| | | |
|---|---|---|
| Total Grip Force (100 psi @ 1 in) | 4.9 lbs | 22 N |
| Stroke (Degree) | -6 to +180 | |
| Weight | 0.12 lbs | 0.055 kg |
| Bore Size | 0.47 in | 12 mm |
| Cylinder Volume | 0.11 $in^3$ | 1.76 $cm^3$ |
| Repeatability | ± 0.012 in | ± 0.3 mm |
| Temperature Range | 32° to 140° F | 0° to 60° C |
| Pressure Range | 29-101.5 psi | 2-7 bar |
| Filtration Requirement | 40 micron (dry air) | |

***Note: See model code and ordering information page for complete part number selection.***

## Loading Information

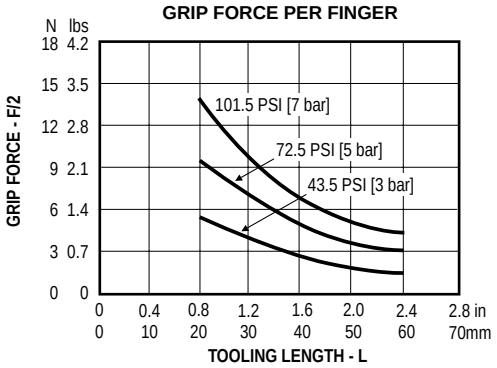


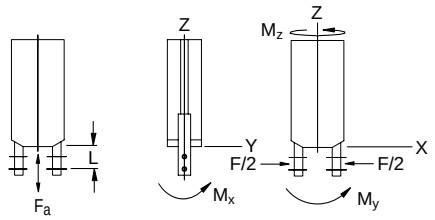


### Maximum Loading Capacity

| Loading Capacity | Static | |
|---|---|---|
| Axial Forces (Fa) | 4 lbs | 18 N |
| Moment (Mx) | 9.7 in-lb | 1.1 Nm |
| Moment (My) | 2.7 in-lb | 0.3 Nm |
| Moment (Mz) | 62 in-lb | 0.7 Nm |

## Dimensional Information

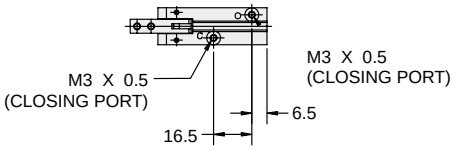


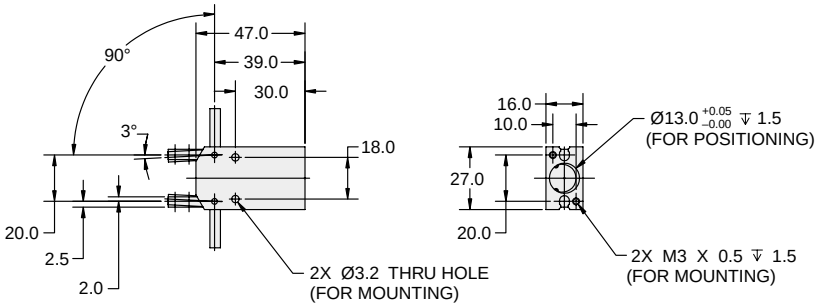


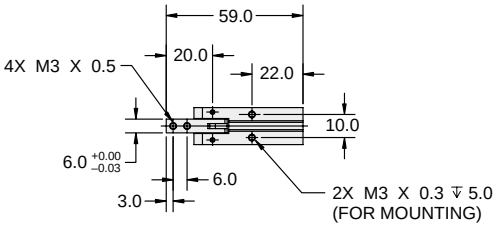


**Dimensions in mm.**



**Parker Hannifin Corporation**
Actuator Division
Wadsworth, Ohio USA

# GVH-16

| | | |
|---|---|---|
| Total Grip Force (100 psi @ 1 in) | 14.3 lbs | 64 N |
| Stroke (Degree) | -6 to +180 | |
| Weight | 0.32 lbs | 0.146 kg |
| Bore Size | 0.62 in | 16 mm |
| Cylinder Volume | 0.27 $in^3$ | 4.50 $cm^3$ |
| Repeatability | ± 0.012 in | ± 0.3 mm |
| Temperature Range | 32° to 140° F | 0° to 60° C |
| Pressure Range | 29-101.5 psi | 2-7 bar |
| Filtration Requirement | 40 micron (dry air) | |

***Note: See model code and ordering information page for complete part number selection.***

## Loading Information

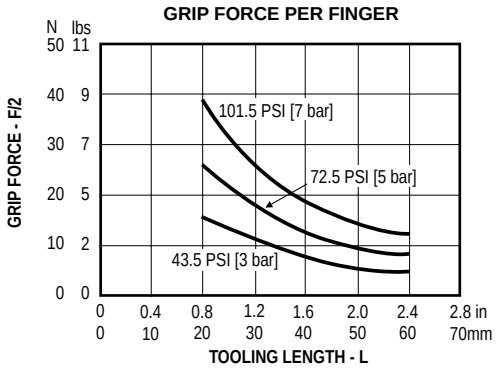


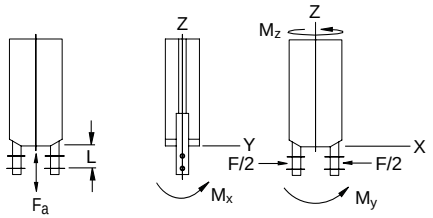


### Maximum Loading Capacity

| Loading Capacity | Static | |
|---|---|---|
| Axial Forces (Fa) | 7 lbs | 31.1 N |
| Moment (Mx) | 18.6 in-lb | 2.1 Nm |
| Moment (My) | 6.2 in-lb | 0.7 Nm |
| Moment (Mz) | 10.6 in-lb | 1.2 Nm |

## Dimensional Information

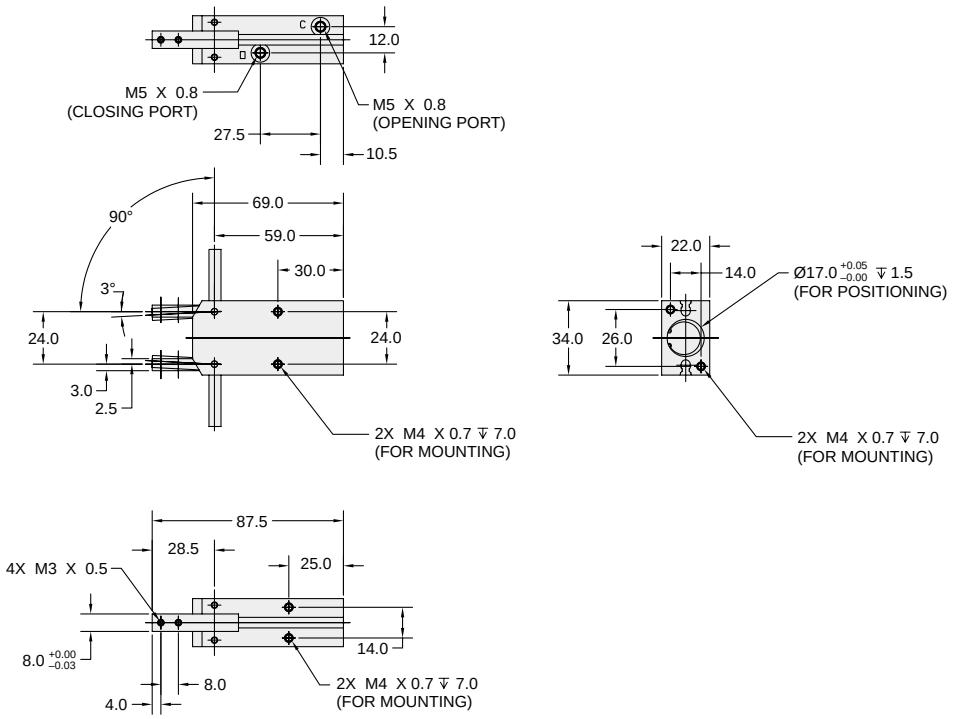


**Dimensions in mm.**





**Parker Hannifin Corporation**
Actuator Division
Wadsworth, Ohio USA

# GVH-20

| | | |
|---|---|---|
| Total Grip Force (100 psi @ 1 in) | 26.9 lbs | 120 N |
| Stroke (Degree) | -6 to +180 | |
| Weight | 0.61 lbs | 0.277 kg |
| Bore Size | 0.78 in | 20 mm |
| Cylinder Volume | 0.46 $in^3$ | 7.54 $cm^3$ |
| Repeatability | ± 0.012 in | ± 0.3 mm |
| Temperature Range | 32° to 140° F | 0° to 60° C |
| Pressure Range | 29-101.5 psi | 2-7 bar |
| Filtration Requirement | 40 micron (dry air) | |

***Note: See model code and ordering information page for complete part number selection.***

## Loading Information

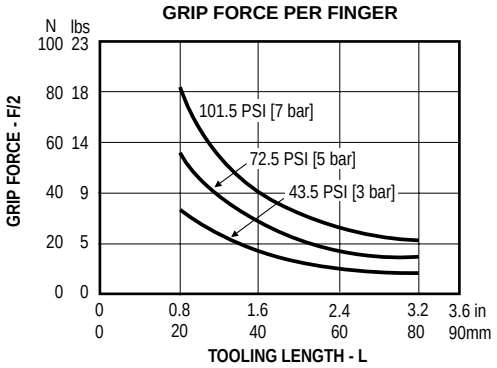


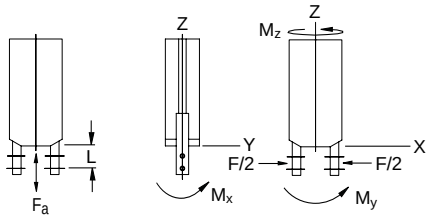


### Maximum Loading Capacity

| Loading Capacity | Static | |
|---|---|---|
| Axial Forces (Fa) | 11 lbs | 48.9 N |
| Moment (Mx) | 29.2 in-lb | 3.3 Nm |
| Moment (My) | 10.6 in-lb | 1.2 Nm |
| Moment (Mz) | 16.8 in-lb | 1.9 Nm |

## Dimensional Information

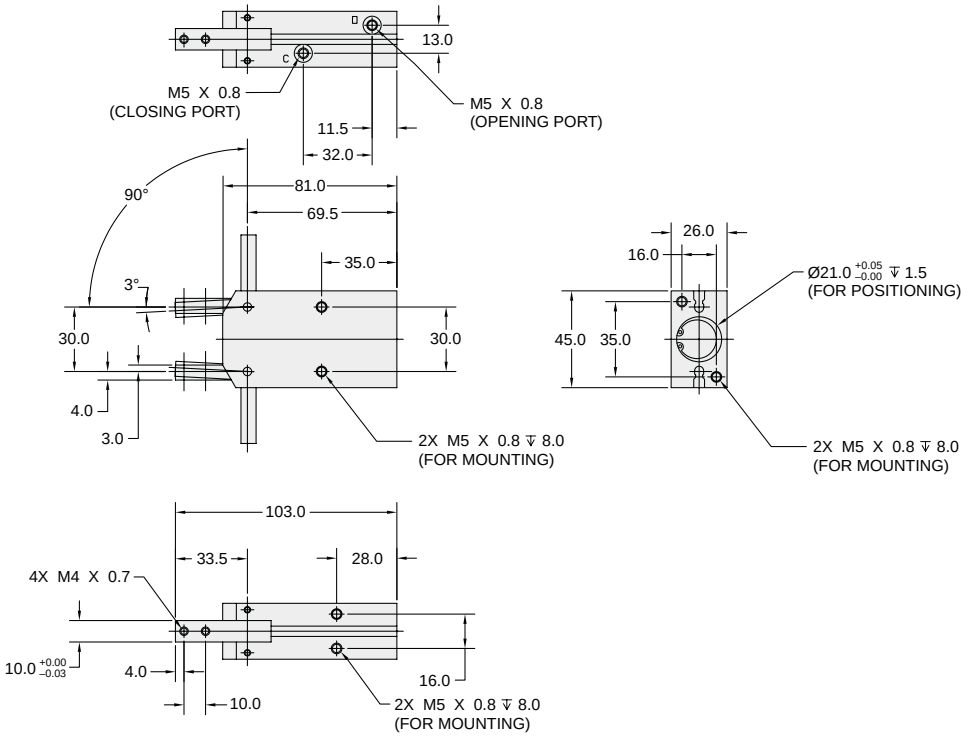


**Dimensions in mm.**



**Parker Hannifin Corporation**
Actuator Division
Wadsworth, Ohio USA

# GVH-25

| | | |
|---|---|---|
| Total Grip Force (100 psi @ 1 in) | 53.9 lbs | 240 N |
| Stroke (Degree) | -6 to +180 | |
| Weight | 0.94 lbs | 0.427 kg |
| Bore Size | 0.98 in | 25 mm |
| Cylinder Volume | 0.92 $in^3$ | 15.01 $cm^3$ |
| Repeatability | ± 0.012 in | ± 0.3 mm |
| Temperature Range | 32° to 140° F | 0° to 60° C |
| Pressure Range | 29-101.5 psi | 2-7 bar |
| Filtration Requirement | 40 micron (dry air) | |

***Note: See model code and ordering information page for complete part number selection.***

## Loading Information

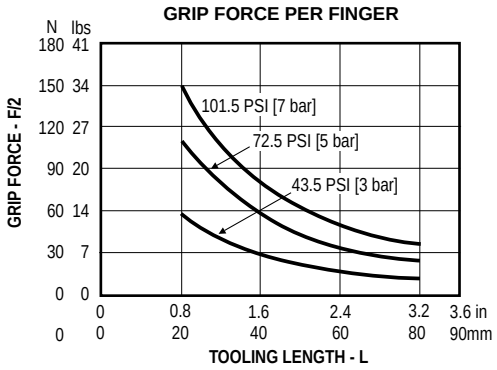


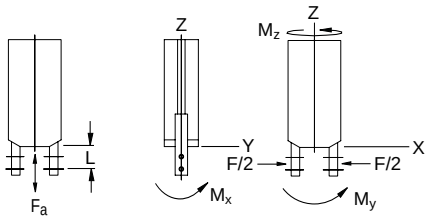


### Maximum Loading Capacity

| Loading Capacity | Static | |
|---|---|---|
| Axial Forces (Fa) | 15 lbs | 66 N |
| Moment (Mx) | 33.6 in-lb | 3.8 Nm |
| Moment (My) | 15.0 in-lb | 1.7 Nm |
| Moment (Mz) | 21.2 in-lb | 2.4 Nm |

## Dimensional Information

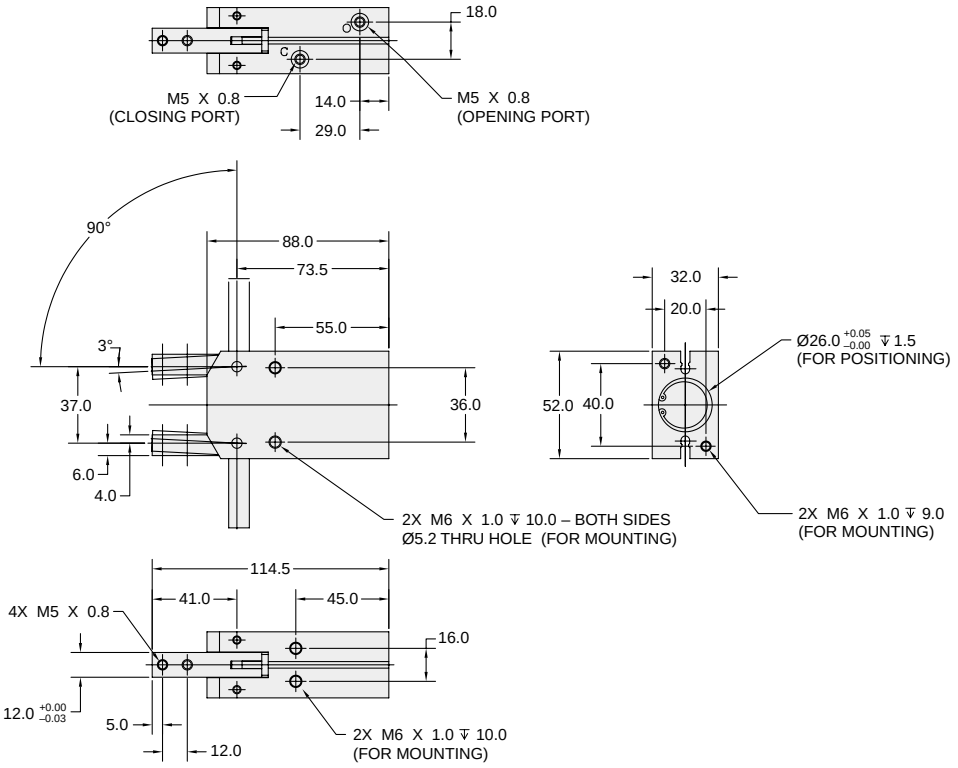


**Dimensions in mm.**





**Parker Hannifin Corporation**
Actuator Division
Wadsworth, Ohio USA

## Model Code and Ordering Information

GVH – 12

**Series**

GVH

**Size**

12 – 12mm Bore
16 – 16mm Bore
20 – 20mm Bore
25 – 25mm Bore

## Seal Kits

| Size | Nitrile Seal Kit |
|---|---|
| GVH-12 | PSK-GVH-12 |
| GVH-16 | PSK-GVH-16 |
| GVH-20 | PSK-GVH-20 |
| GVH-25 | PSK-GVH-25 |

## Features

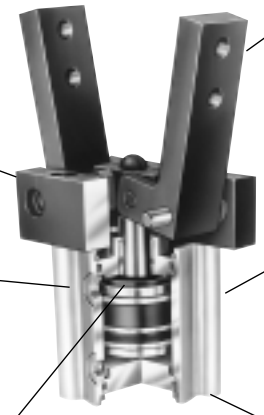

**Internal Components**
A hardened steel pin and self-lubricated bronze bearing support the gripper fingers, minimizing play after millions of cycles.

**Jaws**
Fingers are made from steel for added strength and durability with through holes for easy addition of customer tooling.

**Ports**
Standard 10-32 (M5) ports or optional Presto-lok right angle flow controls are available. The body can be rotated in the field in 90° increments to provide ports in other positions, simplifying plumbing and increasing design flexibility.

**Extruded Body**
The hard coat anodized body is machined from a one-piece aluminum extrusion to provide a slick seal surface which guarantees long seal life and low breakaway pressures.

**Bumpers**
Polyurethane bumper pad absorbs shock and noise, thus permitting faster cycle times, increased production rates and longer life.

**Mounting**
Combination side and base tapped holes are standard and provide for design flexibility. The base mount includes a pilot diameter for alignment. Mounting kits are also available to interface with other automation components.

**Seals**
Self lubricating dynamic seals (Nitrile or Fluorocarbon)

## Operation

Operating Characteristic ..... Double acting
Gripping Force @ 100 PSI ..... 12 - 27 lbs
Operating Pressure Range ..... 10-100 psi (0.7 - 7 bar)

## Mounting

Grippers can be mounted and operated in any orientation.

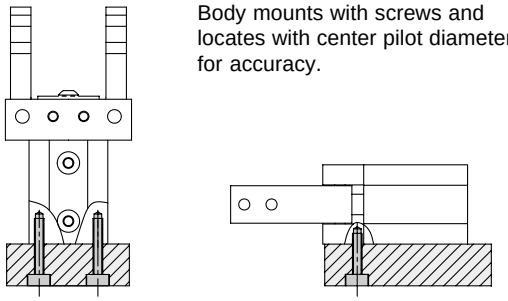

Body mounts with screws and locates with center pilot diameter for accuracy.

**WARNING!** Protect drive and bearing mechanism from falling debris when mounted with fingers up.

## Contents

GAW101 ..... 184
GAW151 ..... 185
Right Angle Flow Controls ..... 186
Port Location Option ..... 186
Proximity Sensor Bracket Option ..... 187
Magnetic Piston Option ..... 187
Fluorocarbon Seals ..... 187
Ordering Information ..... 188
Seal Kits ..... 188





**Parker Hannifin Corporation**
Actuator Division
Wadsworth, Ohio USA

# GAW101

| | | |
|---|---|---|
| Total Grip Force (100 psi @ 1.5 in) | 2.7 lbs | 12 N |
| Stroke (Degree) | +5 to -180 | |
| Weight | 1.1 lbs | 0.49 kg |
| Bore Size | 1 in | 25.4 mm |
| Cylinder Volume | 0.745 $in^3$ | 12.1 $cm^3$ |
| Repeatability | ± 0.004 in | ± 0.10 mm |
| Temperature Range* | 0° to 180° F | 17° to 80° C |
| Pressure Range | 40-100 psi | 3-7 bar |
| Filtration Requirement | 40 micron (dry air) | |

* Fluorocarbon seals available for high temperature applications

***Note: See model code and ordering information page for complete part number selection.***

## Loading Information

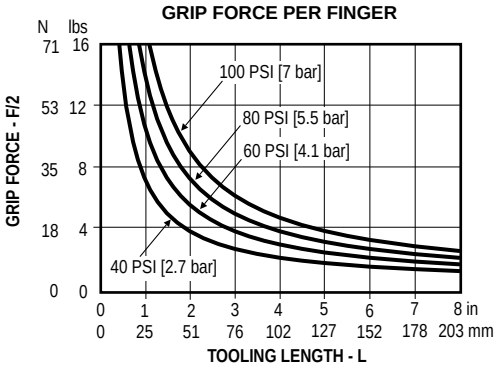


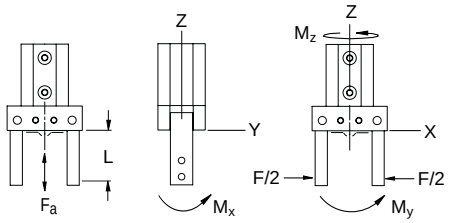


### Maximum Loading Capacity

| Loading Capacity | Static | |
|---|---|---|
| Axial Forces (Fa) | 18 lbs | 80 N |
| Moment (Mx) | 22 in-lbs | 2.5 Nm |
| Moment (My) | 22 in-lbs | 2.5 Nm |
| Moment (Mz) | 12 in-lbs | 1.4 Nm |

## Dimensional Information

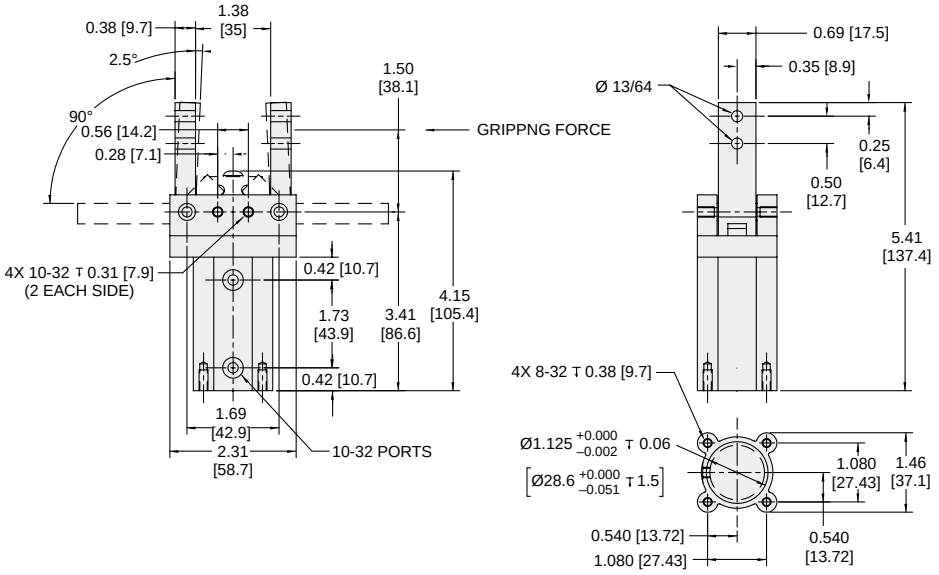


**Dimensions in inch [mm].**



**Parker Hannifin Corporation**
Actuator Division
Wadsworth, Ohio USA

## GAW151

| | | |
|---|---|---|
| Total Grip Force (100 psi @ 1.5 in) | 6.3 lbs | 28 N |
| Stroke (Degree) | +5 to -180 | |
| Weight | 2 lbs | 0.90 kg |
| Bore Size | 1.5 in | 38.1 mm |
| Cylinder Volume | 1.804 $in^3$ | 29.4 $cm^3$ |
| Repeatability | ± 0.004 in | ± 0.10 mm |
| Temperature Range* | 0° to 180° F | 17° to 80° C |
| Pressure Range | 40-100 psi | 3-7 bar |
| Filtration Requirement | 40 micron (dry air) | |

*Fluorocarbon seals available for high temperature applications

***Note: See model code and ordering information page for complete part number selection.***

## Loading Information

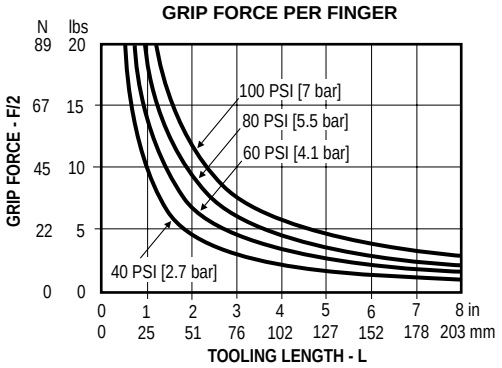


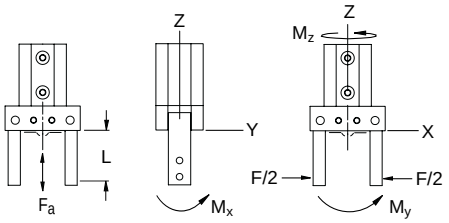


### Maximum Loading Capacity

| Loading Capacity | Static | |
|---|---|---|
| Axial Forces (Fa) | 28 lbs | 124 N |
| Moment (Mx) | 30 in-lbs | 3.4 Nm |
| Moment (My) | 30 in-lbs | 3.4 Nm |
| Moment (Mz) | 17 in-lbs | 2.0 Nm |

## Dimensional Information

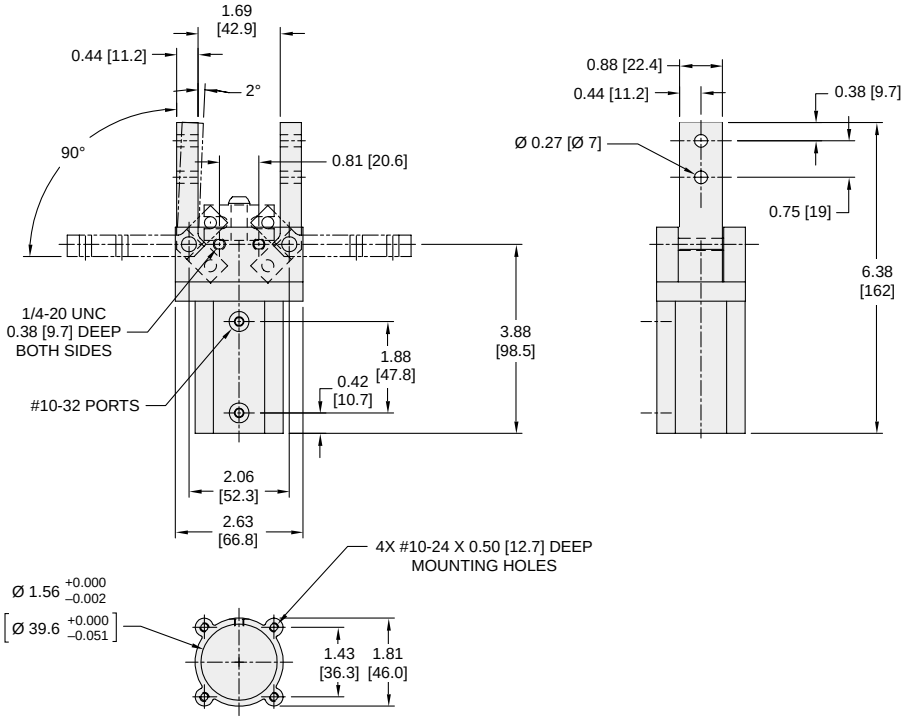


**Dimensions in inch [mm].**





**Parker Hannifin Corporation**
Actuator Division
Wadsworth, Ohio USA

## Right Angle Flow Control (P)

Right angle flow control valves allow precise adjustment of cylinder speed by metering exhaust air flow. Presto-Lok push-in ports provide 360° orientation capability.

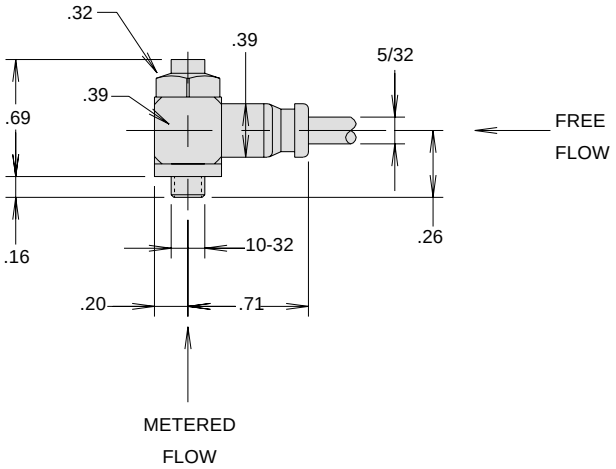


## Port Location (1, 2)

GA Series grippers are symmetrical. Ports position 1 is standard. Position 3 can be obtained by rotating the gripper 180°. Ports position 2 is an option. Position 4 is obtainable by ordering port position 2 and rotating 180°.

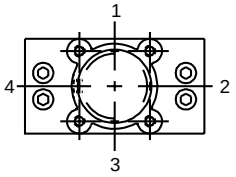


## Proximity Sensor Bracket (J)

Proximity sensors sense the position of the flag that is attached to the gripper finger. The flag is held onto the gripper finger by a set screw. Loosening the set screw allows positioning of the flag to sense any position of the gripper finger. Care should be taken when adjusting the proximity sensor so that the flag does not physically contact the sensor. The distance from the flag to the sensor should be approximately 0.04 inches (1mm).

Order proximity sensors separately. See Sensors section for part numbers and sensor specifications.

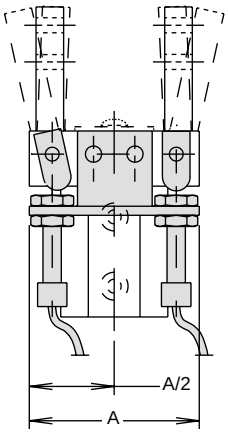


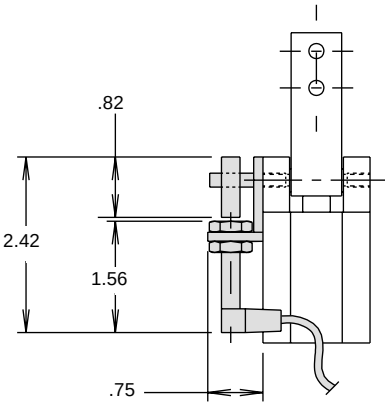


### Dimensions

| Model | A, inch (mm) |
|---|---|
| GAW10 | 2.51 (63.7) |
| GAW15 | 2.63 (66.8) |

## Magnetic Piston (M)

This option prepares the actuator for use with reed and Hall Effect switches. The "M" option should be specified to provide a magnet on the cylinder piston.

Order switches separately. See Sensors section for part numbers and specifications.

## Hall Effect and Reed Switches

Order switches separately. See Sensor section for part numbers and specifications.

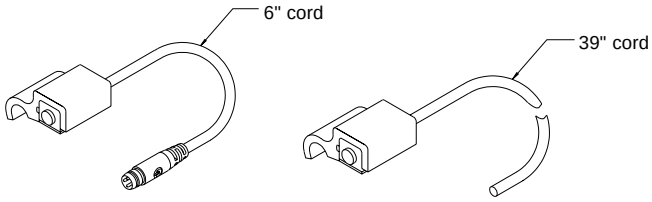


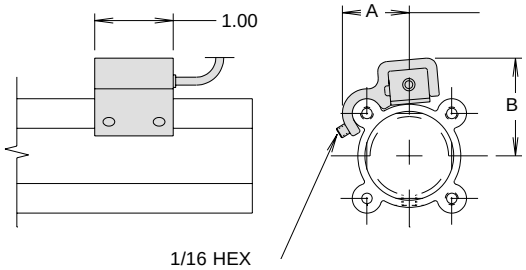


### Dimensions

| Model | A inch(mm) | B inch (mm) |
|---|---|---|
| GAW10 | 0.84 (21.3) | 1.22 (31.0) |
| GAW15 | 0.99 (25.2) | 1.46 (37.1) |

## Fluorocarbon Seals (V)

Standard abrasion resistant nitrile seals should be used for general purpose applications with temperatures of 0 to 180°F.

Fluorocarbon seals are recommended for high temperature applications up to 250°F.

| Option | Temperature Range (°F) |
|---|---|
| Bumpers | 0 to 200 |
| Piston Magnets | 0 to 165 |
| Switches | 14 to 140 |
| Proximity Sensor | -13 to 158 |





**Parker Hannifin Corporation**
Actuator Division
Wadsworth, Ohio USA

## Model Code and Ordering Information

| GA | W | 15 | 1 | P | – | A | 2 | 1 | J | V | – | A |
|---|---|---|---|---|---|---|---|---|---|---|---|---|

**Series**
GA

**Type**
W - Wide Open (180°)

**Size**
10 - 1 in. bore
15 - 1.5 in. bore

**Opening Characteristics**
1 - Double acting (STD)

**Flow Controls**
Omit - None
P - Right angle flow control (both)

**Mounting**
A - Rear and side tapped holes (STD)

**Port Type**
2 - 10-32 (STD)
8 - Presto-Lok right angle flow control

**Port Location**
1 - Position 1 (STD)
2 - Position 2

**Switches**
Omit - None
J - Bracket for proximity sensor option*
M - Magnetic piston for reed and Hall Effect switch option*

**Seals**
Omit - Nitrile (STD)
V - Fluorocarbon

**Design Series**
A - Current Design Series

* Proximity sensor, Hall Effect, and reed switches to be ordered separately.

## Seal Kits

| Size | Nitrile Seal Kit | Fluorocarbon Seal Kit |
|---|---|---|
| GAW10 | PSK-G10 | PSK-G10V |
| GAW15 | PSK-G15 | PSK-G15V |



**Parker Hannifin Corporation**
Actuator Division
Wadsworth, Ohio USA

## Features

**Magnetic Piston**
Standard on all grippers.

**Bumpers**
Reduce noise and dissipate energy, thus permitting faster cycle times and increased production rates.

**Body**
Machined from an aluminum extrusion that is anodized and permanently sealed. This results in a smooth seal surface which guarantees long seal life and low breakaway pressure.

**Jaws**
Hardened stainless steel jaws are standard.

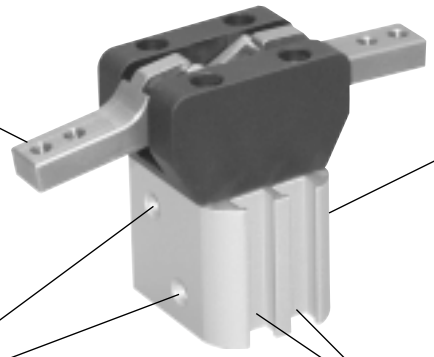

**Mounting**
Combination side and rear tapped holes are standard and provide for design flexibility. Both mounting positions include dowel holes for alignment.

**Sensors**
Grippers may be ordered with proximity, Hall Effect or reed sensors. A "prox ready" option is also available.

**Ports**
Standard M5 female ports or optional Presto-lok right angle flow controls.

**Sensor Grooves**
All gripper sizes are equipped with two sensor grooves for standard Parker sensors.

**Multiple Function**
Jaw travel either grip open or grip close.

## Operation

Operating Characteristic ..... Double acting, wide opening
Gripping Force @ 100 PSI ..... 11 - 134 lbs
Stroke ..... -5° to +180°
Operating Pressure Range ..... 40 - 100 PSI (3 - 7 bar)

Not recommended for applications containing:

- Dirt or grit
- Machining chips
- Environments with loose particulate
- Mechanism lubricant that could cause contamination

## Mounting

Gripper mounts with screws and locates with dowel pin holes for accuracy.

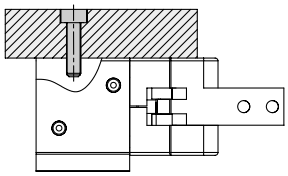

Gripper mounts with screws and locates with center pilot diameter for accuracy.

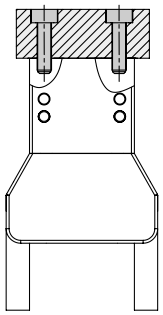

**Warning!** Protect drive and bearing mechanism from falling debris when mounted with fingers up.

## Contents

P5G-AW3 ..... 190
P5G-AW4 ..... 191
P5G-AW5 ..... 192
P5G-AW6 ..... 193
Right Angle Flow Controls ..... 194
Spring Return Option ..... 194
Stroke Adjust ..... 195
Sensors ..... 196
Fluorocarbon Seals ..... 196
Ordering Information ..... 197
Seal Kits ..... 197





**Parker Hannifin Corporation**
Actuator Division
Wadsworth, Ohio USA

## P5G-AW3

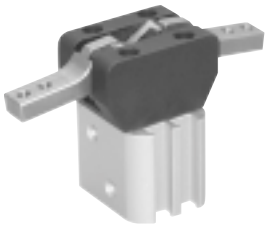

| | | |
|---|---|---|
| Total Grip Force (100 psi @ 25 mm) | 13.9 lbs | 62 N |
| Stroke (Degree) | -5 to +180 | |
| Weight | 0.29 lbs | 0.13 kg |
| Bore Size | 0.62 in | 16 mm |
| Cylinder Volume | 0.11 $in^3$ | 1.807 $cm^3$ |
| Repeatability | ±0.001 in | ±0.03 mm |
| Temperature Range* | -4° to 180° F | -20° to 82° C |
| Pressure Range | 4-100 psi | 0.3-7 bar |
| Filtration Requirement | 40 micron (dry air) | |

* Fluorocarbon seals available for high temperature applications

***Note: See model code and ordering information page for complete part number selection.***

## Loading Information

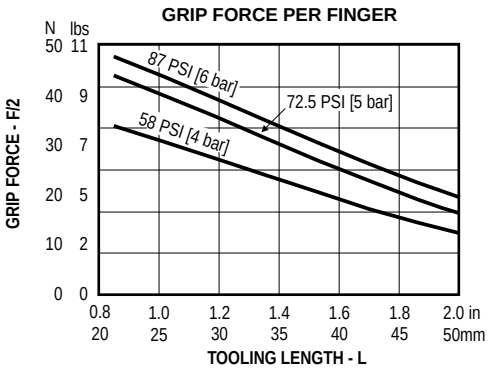


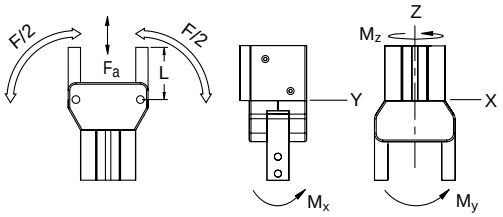


### Maximum Loading Capacity

| Loading Capacity | Static | |
|---|---|---|
| Axial Forces (Fa) | 20.1 lbs | 88 N |
| Moment (Mx) | 38.7 in-lbs | 4.3 Nm |
| Moment (My) | 38.7 in-lbs | 4.3 Nm |
| Moment (Mz) | 37.8 in-lbs | 4.2 Nm |

## Dimensional Information

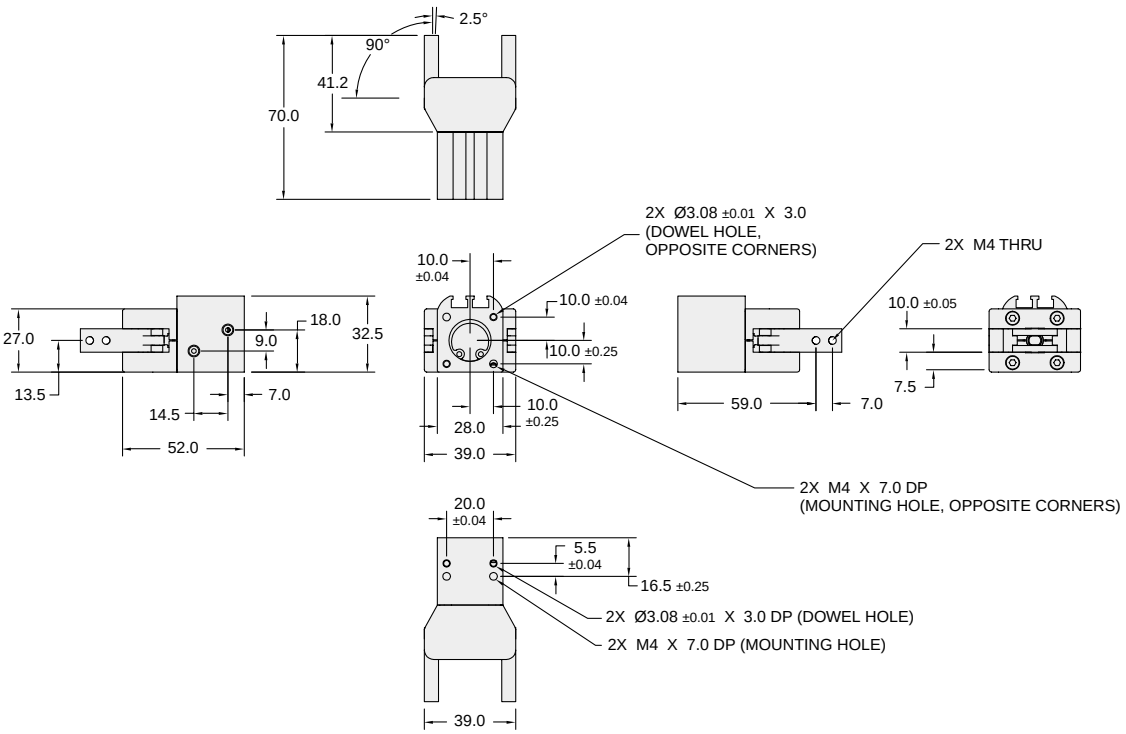


**Dimensions in mm.**



**Parker Hannifin Corporation**
Actuator Division
Wadsworth, Ohio USA

## P5G-AW4

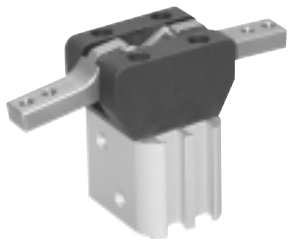

| | | |
|---|---|---|
| Total Grip Force (100 psi @ 30 mm) | 38.5 lbs | 171.6 N |
| Stroke (Degree) | -5 to +180 | |
| Weight | 0.61 lbs | 0.27 kg |
| Bore Size | 0.98 in | 25 mm |
| Cylinder Volume | 0.35 $in^3$ | 5.702 $cm^3$ |
| Repeatability | ±0.001 in | ±0.03 mm |
| Temperature Range* | -4° to 180° F | -20° to 82° C |
| Pressure Range | 4-100 psi | 0.3-7 bar |
| Filtration Requirement | 40 micron (dry air) | |

* Flourocarbon seals available for high temperature applications

***Note: See model code and ordering information page for complete part number selection.***

## Loading Information

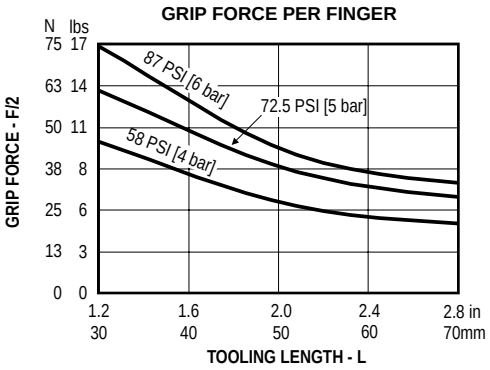


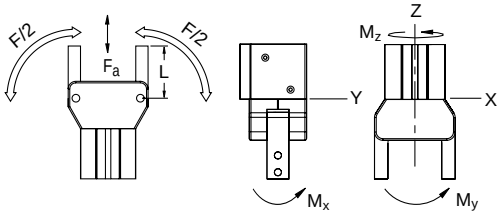


### Maximum Loading Capacity

| Loading Capacity | Static | |
|---|---|---|
| Axial Forces (Fa) | 40 lbs | 175 N |
| Moment (Mx) | 49.5 in-lbs | 5.5 Nm |
| Moment (My) | 49.5 in-lbs | 5.5 Nm |
| Moment (Mz) | 37.8 in-lbs | 4.5 Nm |

## Dimensional Information

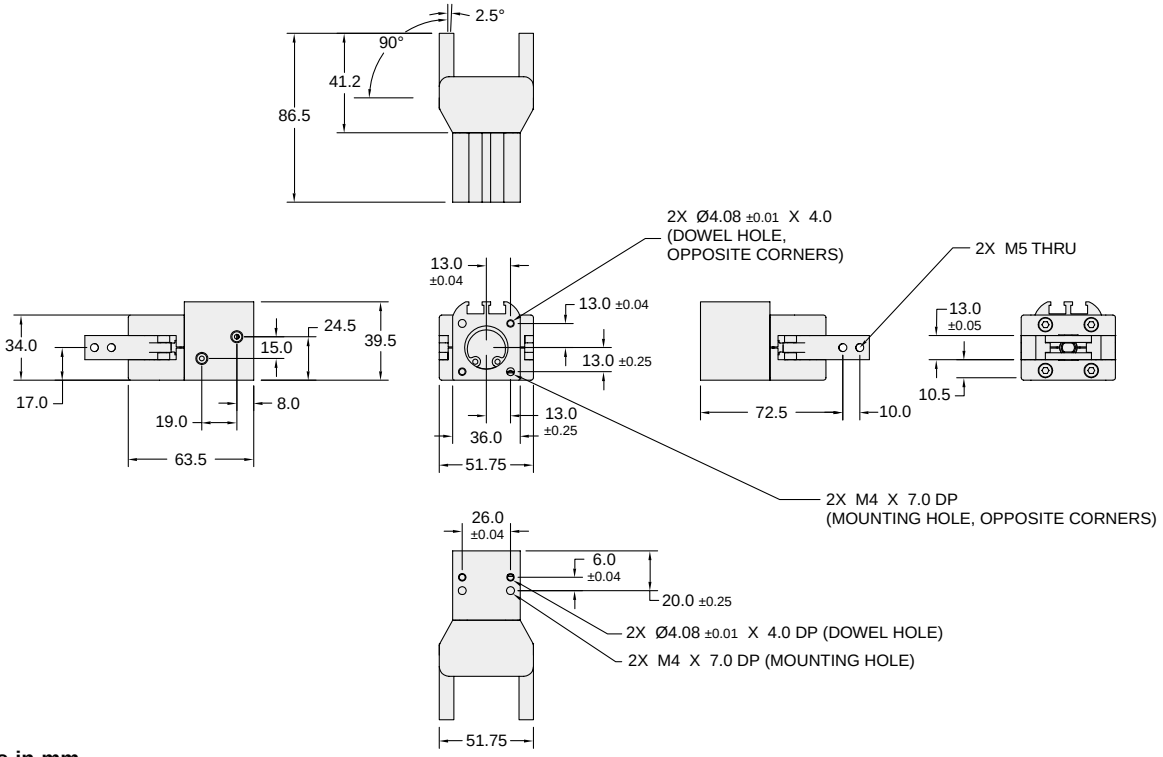


**Dimensions in mm.**





**Parker Hannifin Corporation**
Actuator Division
Wadsworth, Ohio USA

## P5G-AW5

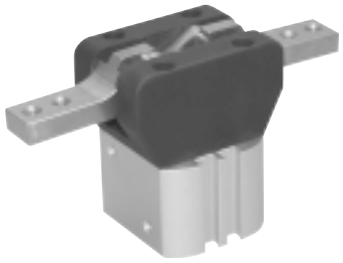

| | | |
|---|---|---|
| Total Grip Force (100 psi @ 30 mm) | 46.9 lbs | 208.8 N |
| Stroke (Degree) | -5 to +180 | |
| Weight | 0.92 lbs | 0.41 kg |
| Bore Size | 1.25 in | 32 mm |
| Cylinder Volume | 0.66 $in^3$ | 10.758 $cm^3$ |
| Repeatability | ±0.001 in | ±0.03 mm |
| Temperature Range* | -4° to 180° F | -20° to 82° C |
| Pressure Range | 4-100 psi | .3-7 bar |
| Filtration Requirement | 40 micron (dry air) | |

* Flourocarbon seals available for high temperature applications

***Note: See model code and ordering information page for complete part number selection.***

## Loading Information

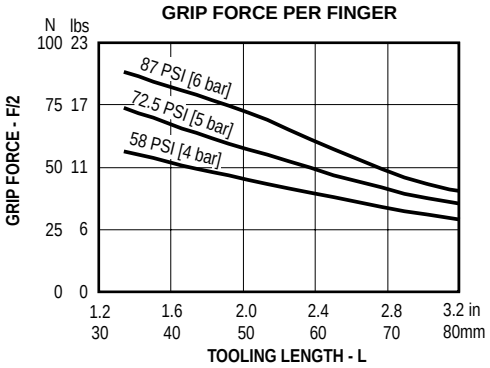


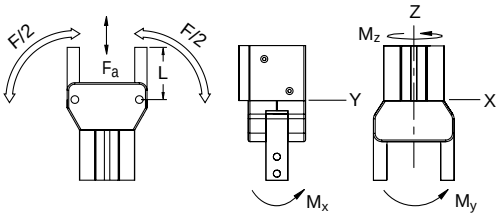


### Maximum Loading Capacity

| Loading Capacity | Static | |
|---|---|---|
| Axial Forces (Fa) | 69.9 lbs | 306 N |
| Moment (Mx) | 76.4 in-lbs | 8.5 Nm |
| Moment (My) | 80.9 in-lbs | 9 Nm |
| Moment (Mz) | 53.1 in-lbs | 5.9 Nm |

## Dimensional Information

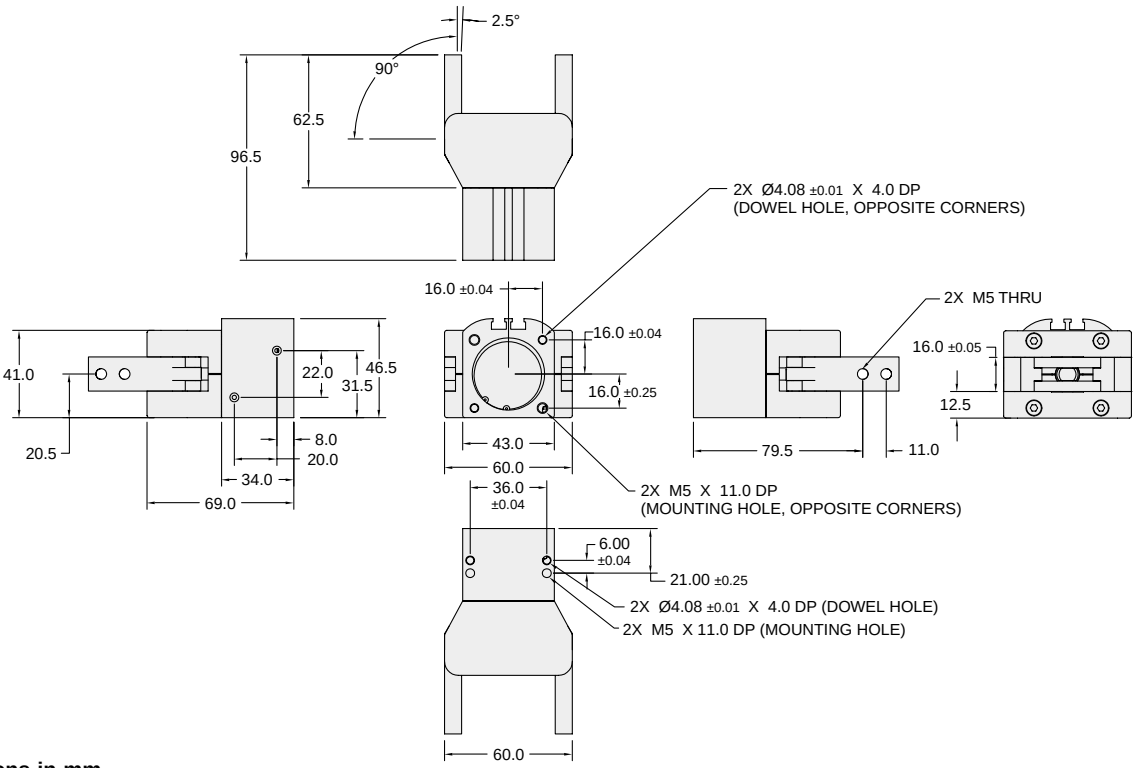


**Dimensions in mm.**



**Parker Hannifin Corporation**
Actuator Division
Wadsworth, Ohio USA

## P5G-AW6

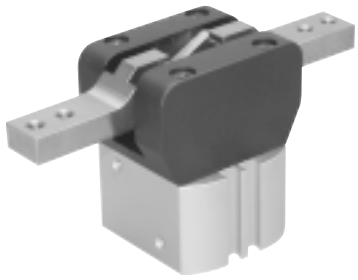

| | | |
|---|---|---|
| Total Grip Force (100 psi @ 40 mm) | 65 lbs | 290 N |
| Stroke (Degree) | -5 to +180 | |
| Weight | 1.30 lbs | 0.59 kg |
| Bore Size | 1.57 in | 40 mm |
| Cylinder Volume | 1.06 $in^3$ | 17.367 $cm^3$ |
| Repeatability | ±0.001 in | ±0.03 mm |
| Temperature Range* | -4° to 180° F | -20° to 82° C |
| Pressure Range | 4-100 psi | 0.3-7 bar |
| Filtration Requirement | 40 micron (dry air) | |

* Fluorocarbon seals available for high temperature applications

***Note: See model code and ordering information page for complete part number selection.***

## Loading Information

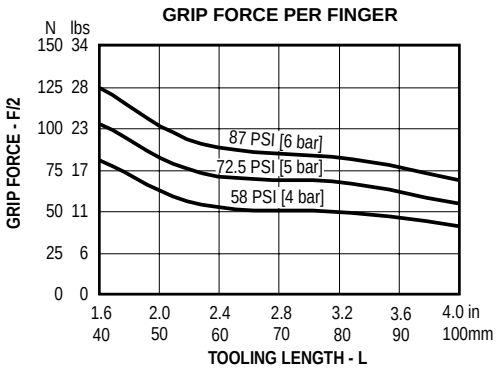


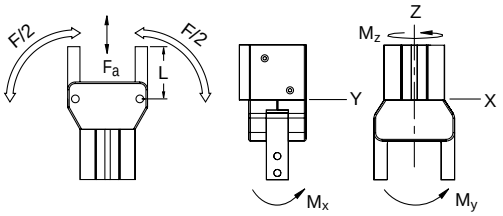


### Maximum Loading Capacity

| Loading Capacity | Static | |
|---|---|---|
| Axial Forces (Fa) | 110.1 lbs | 482 N |
| Moment (Mx) | 116.9 in-lbs | 13 Nm |
| Moment (My) | 123.2 in-lbs | 13.7 Nm |
| Moment (Mz) | 75.5 in-lbs | 8.4 Nm |

## Dimensional Information

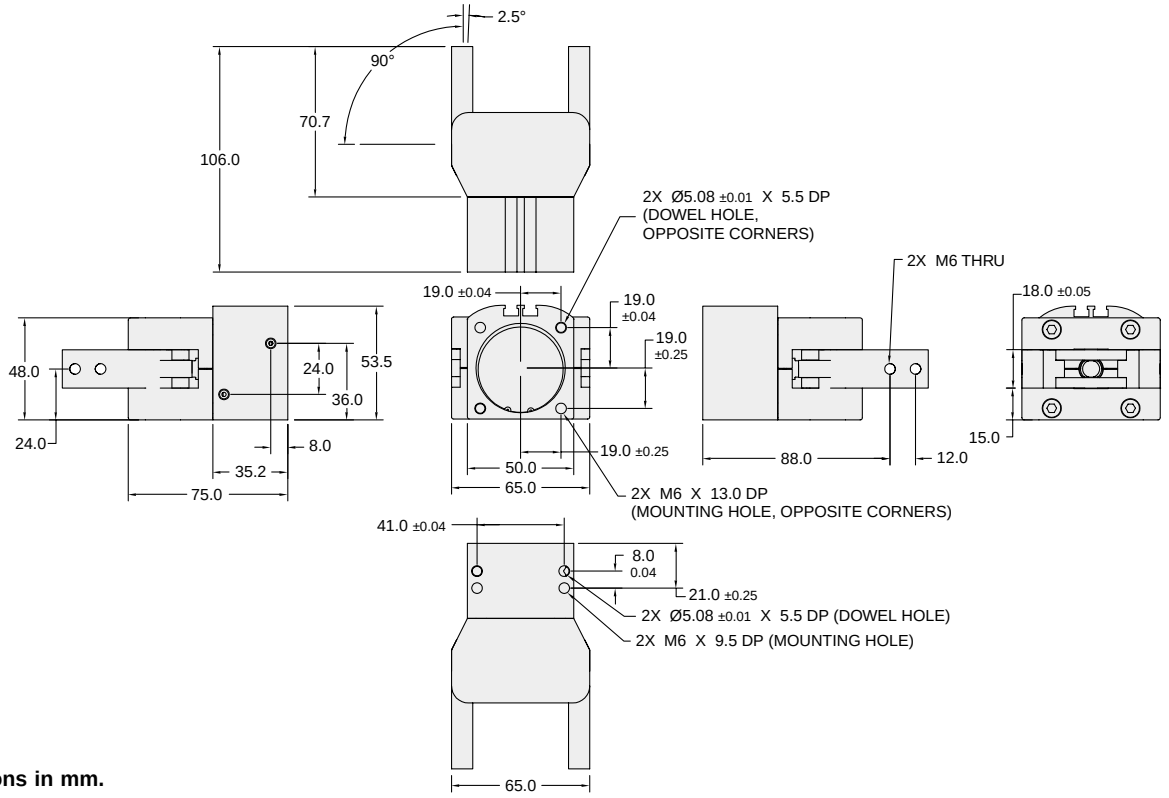


**Dimensions in mm.**





**Parker Hannifin Corporation**
Actuator Division
Wadsworth, Ohio USA

## Right Angle Flow Control (3)

Right angle flow control valves allow precise adjustment of speed by metering exhaust air flow. Presto-Lok push-in ports provide 360° orientation capability.

When using the 180° gripper, it is suggested to slow the finger motion to prevent high inertial loads.

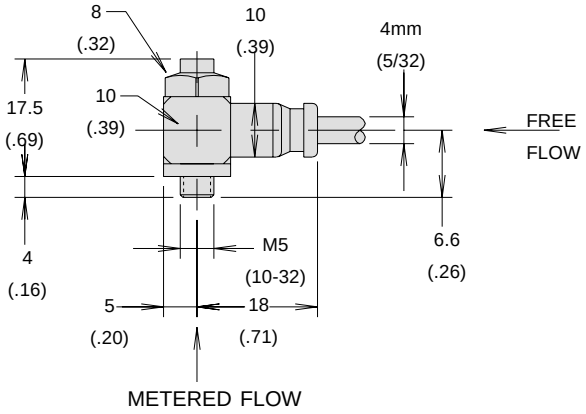


## Spring Return (C)

The spring return option allows for an automatic reset and jaw return. Selecting the spring return option creates a single-acting gripper component that may reduce the number of directional control valves needed to operate automated machinery.

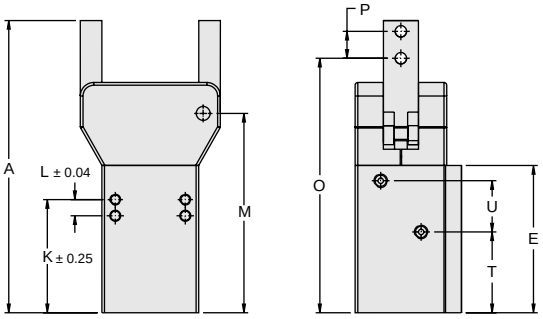


### Dimensions

Spring return will increase body length.

| Size | A | E | K | L | M | O | P | T | U |
|---|---|---|---|---|---|---|---|---|---|
| **3** | 86 | 44.7 | 32.5 | 5.5 | 59.3 | 75 | 7 | 23 | 14.5 |
| **4** | 108.5 | 54.7 | 42 | 6 | 74.5 | 94.5 | 10 | 30 | 19 |
| **5** | 116.5 | 54 | 41 | 6 | 77 | 99.5 | 11 | 28 | 20 |
| **6** | 131 | 60.2 | 46 | 8 | 85 | 113 | 12 | 33 | 22 |

## Gripping Force

The total grip force is defined as the sum of the forces applied by both jaws. Distance (L) is the distance from the pivot of the gripper to the center of the contact on the workpiece.

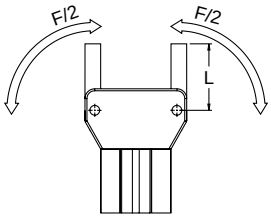


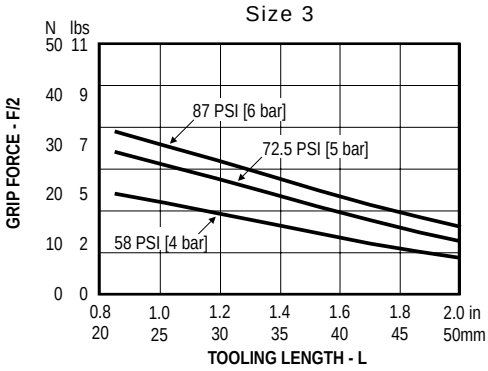


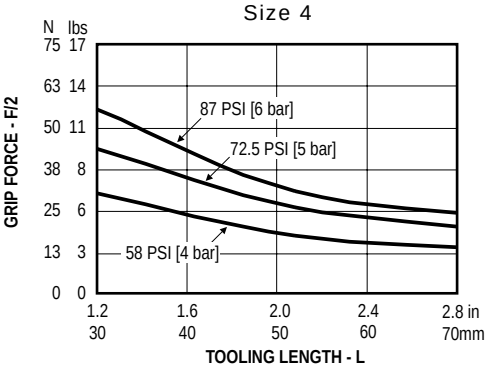


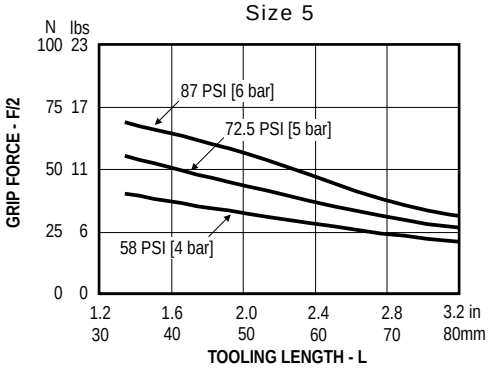


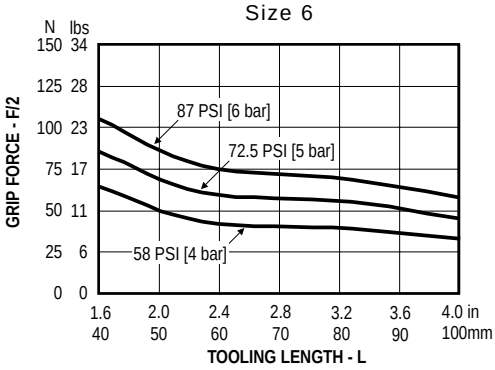




**Parker Hannifin Corporation**
Actuator Division
Wadsworth, Ohio USA

## Stroke Adjust (A, B, D, F, G)

Use the stroke adjust option when exact travel distances are needed. Fully adjustable internal stops permit precise stopping locations anywhere within the jaw travel. The stroke adjust option is available in two configurations:

- Stroke adjust front
- Stroke adjust rear

This gives the machine designer the flexibility to create the best possible design within limited space requirements.

***NOTE:*** *Stroke adjust rear is not available with spring return.*

### Stroke Adjust Front

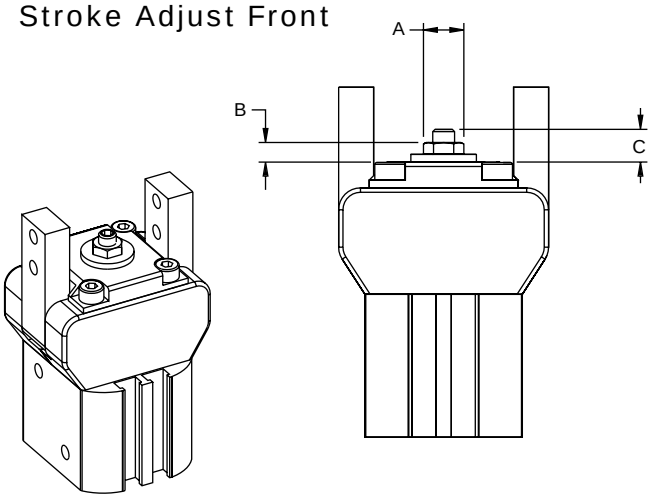


| Size | Style | A | B | C |
|---|---|---|---|---|
| 3 | 180° | 8 | 3 | 11.5 |
| 4 | 180° | 9.5 | 4.5 | 14.5 |
| 5 | 180° | 9.5 | 4.5 | 16 |
| 6 | 180° | 9.5 | 4.5 | 14.5 |

### Stroke Adjust Rear

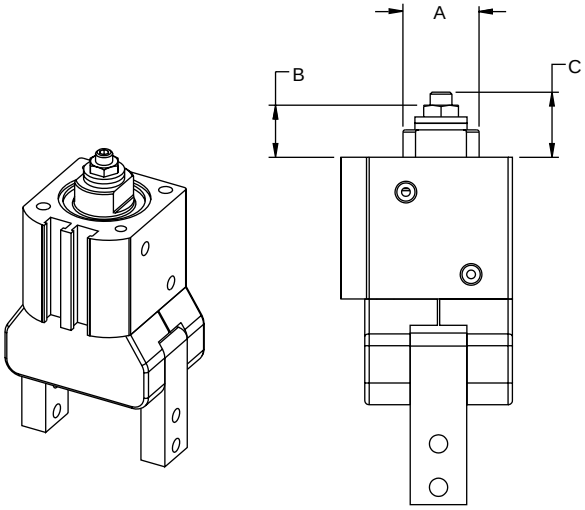


| Size | Style | A | B | C (Max) |
|---|---|---|---|---|
| 3 | 180° | 10.5 | 10 | 14.5 |
| 4 | 180° | 15 | 11.5 | 19 |
| 5 | 180° | 20 | 14 | 21.5 |
| 6 | 180° | 24 | 12.5 | 21.5 |

***NOTE:*** *Stroke adjust rear not available with spring return.*

## Adjustment Tools

| Gripper | Socket Stroke Adjuster | | Nut | |
|---|---|---|---|---|
| Size | Size | Wrench | Size | Wrench |
| 3 | M4 | 2 mm | M4 | 7 mm |
| 4 | M5 | 2.5 mm | M5 | 8 mm |
| 5 | M5 | 2.5 mm | M5 | 8 mm |
| 6 | M5 | 2.5 mm | M5 | 8 mm |

**All dimensions in mm**





**Parker Hannifin Corporation**
Actuator Division
Wadsworth, Ohio USA

## Proximity Sensors
## Prox Ready (PJ)

Proximity sensors provide feedback on the position of the gripper fingers by sensing the metal screw that is attached to the gripper jaw. The sensor is adjustable along the full travel of the steel screw and is held in place by the set screw.

Care should be taken when adjusting the sensor so that the adjustable screw does not physically contact the sensor. Distance from the screw to the sensor should be approximately 1 mm (0.04 inches).

See Sensors section for sensor specifications.

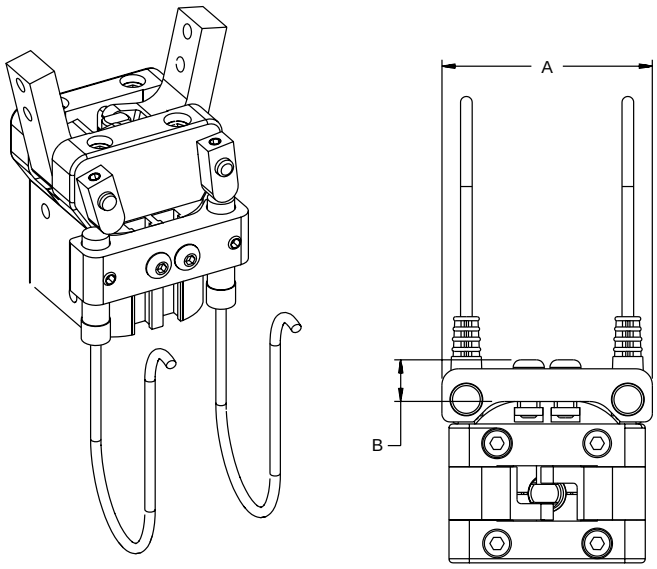


| Size | A | B |
|---|---|---|
| 3 | 42 | 10.3 |
| 4 | 51.5 | 10.2 |
| 5 | 59 | 10.2 |
| 6 | 66 | 10.2 |

## Reed and Hall Effect Sensors

Reed or Hall effect sensors mount in the sensor mounting grooves located in the gripper body. A magnetic piston is standard for ease of field addition of sensors.

See Sensors section for specifications.

**Standard Sensors**

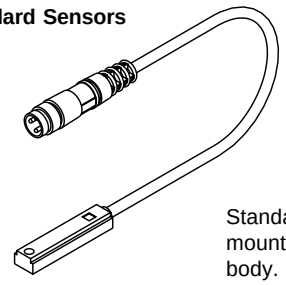

Standard sensors mount flush to the body. Sensor shown with connector. Lead wires also available.

**Short Sensors**

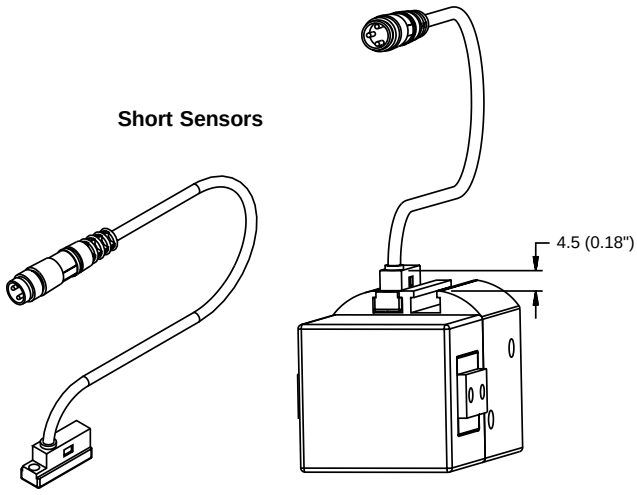


## Fluorocarbon Seals (V)

Standard abrasion resistant nitrile seals should be used for general purpose applications with temperatures of -18° to 82°C (0° to 180°F). Fluorocarbon seals are recommended for high temperature applications up to 121°C (250°F). The items shown in the table should be considered when planning high temperature applications.

| | Temperature Range |
|---|---|
| Magnets | -27° to 130°C (-16° to 266°F) |
| Bumpers | -27° to 90°C (-16° to 195°F) |
| Sensors | -25° to 75°C (-13° to 167°F) |
| Proximity Sensors | -25° to 70°C (-13° to 158°F) |

## Model Code and Ordering Information

P5G – A W 4 B A N HB S – A

**Global Pneumatic Grippers**

P5G

**Series**

A – Automation

**Type**

W – 180° Angular

**Size**

3 – 16 mm
4 – 25 mm
5 – 32 mm
6 – 40 mm

**Ports**

3 – Prestolok Flow Control 4mm (5/32”) tube diameter

**Function**

A – Standard

**Spring/Stroke Adjust Options**

A – Spring Return, Stroke Adjust Front
C – Spring Return
F – No Spring, Stroke Adjust Front
G – No Spring, Stroke Adjust Rear
N – No Option (Standard)

**Sensors**

NN – No Sensors
PJ – Proximity Sensor Ready

**Standard Hall Effect**
HA – (2) NPN w/Plug*
HB – (2) PNP w/Plug*
HC – (1) NPN w/Plug*
HD – (1) PNP w/Plug*
HE – (2) NPN w/o Plug**
HF – (2) PNP w/o Plug**
HG – (1) NPN w/o Plug**
HK – (1) PNP w/o Plug**

**Short Hall Effect**
HV – (2) PNP w/Plug*
HY – (1) PNP w/Plug*
KB – (2) PNP w/o Plug**
KD – (1) PNP w/o Plug**

**Standard Reed**
RA – (2) w/Plug*
RB – (1) w/Plug*
RC – (2) w/o Plug**
RD – (1) w/o Plug**

**Proximity**
PA – (2) NPN Plug-in †
PB – (2) PNP Plug-in †
PC – (1) NPN Plug-in †
PD – (1) PNP Plug-in †
PE – (2) NPN Potted ‡
PF – (2) PNP Potted ‡
PG – (1) NPN Potted ‡
PK – (1) PNP Potted ‡

* 0.27m cable
** 3m cable

† 5m cable
‡ 6m lead

**Seals**

S – Standard
F – Fluorocarbon

**Design Series**

A – Current Design Series

## Seal Kits

| Size | Nitrile Seal Kit | Fluorocarbon Seal Kit |
|---|---|---|
| P5G-AW3 | PSK-P5GAW3 | PSK-P5GAW3-F |
| P5G-AW4 | PSK-P5GAW4 | PSK-P5GAW4-F |
| P5G-AW5 | PSK-P5GAW5 | PSK-P5GAW5-F |
| P5G-AW6 | PSK-P5GAW6 | PSK-P5GAW6-F |





**Parker Hannifin Corporation**
Actuator Division
Wadsworth, Ohio USA

## Notes



**Parker Hannifin Corporation**
Actuator Division
Wadsworth, Ohio USA

## Features

**Contaminant Tolerance**
Sealed design resists internal contamination.

**Stroke Adjust**
Standard on P5G-RB grippers.

**Body**
Lightweight, permanantly sealed, anodized aluminum to provide maximum corrosion resistance.

**Mounting**
Standard mounting on three faces with through-hole top mount and standard dowel pin holes to provide a precise alignment and easy installation.

**Dowel Pin Holes**
Press fit dowels located in gripper body and jaws.

**Seals**
Self lubricating dynamic seals (Nitrile only)

**Sensors**
Sensor grooves allow easy installation, adjustment of magneto resistive sensor. Magnetic piston is standard.

## Operation

Operating Characteristic ..... Double acting, spring closed

Gripping Force @ 100 PSI .... 62 - 632 N (13.8 to 142 lbs)

Stroke ..... -3° to +180°

Operating Pressure Range ..... 29-100 PSI (2-7 bar)

## Mounting

Gripper can be mounted on three faces and locates with dowel pin holes for accuracy.

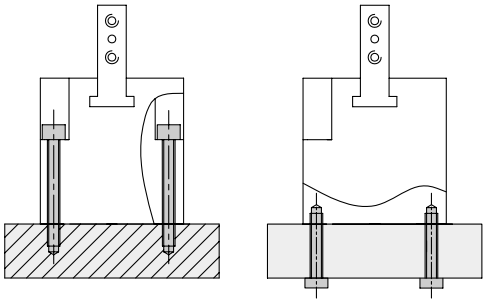

**Warning!** Protect drive and bearing mechanism from falling debris when mounted with fingers up.

## Contents

P5G-RB1 ..... 200
P5G-RB2 ..... 201
P5G-RB3 ..... 202
Jaw Options ..... 203
Spring Assist Option ..... 203
Dust Cover Option ..... 203
Ordering Information ..... 204
Seal Kits ..... 204





**Parker Hannifin Corporation**
Actuator Division
Wadsworth, Ohio USA

# P5G-RB1

| | | |
|---|---|---|
| Total Grip Force (0.7 Mpa @ 25 mm) | 13.8 lbs | 61.4 N |
| Total Stroke (Degree) | -3 to +180 | |
| Weight w/ square jaw carrier | 0.264 lbs | 0.12 kg |
| Bore Size | 0.6299 in | 16 mm |
| Cylinder Volume | 0.222 $in^3$ | 3.65 $cm^3$ |
| Repeatability | ±0.003 in | ±0.1 mm |
| Temperature Range* | -4° to 158° F | -20° to 70° C |
| Pressure Range | 29-100 psi | 2-7 bar |
| Filtration Requirement | 40 micron (dry air) | |

* Flourcarbon seals available for high temperature applications

***Note: See model code and ordering information page for complete part number selection.***

## Loading Information

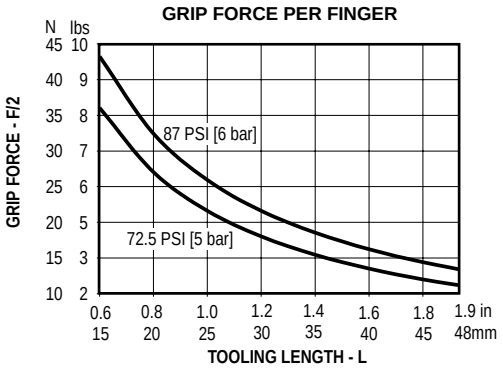


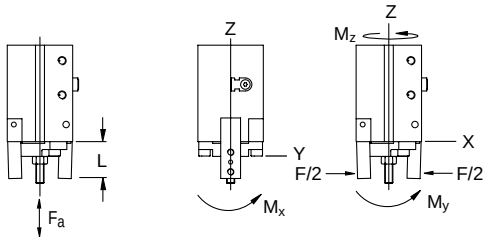


### Maximum Loading Capacity

| Load | Static | |
|---|---|---|
| Axial Forces (Fx) | 11.2 lbs | 50 N |
| Moment (Mx) | 17.7 in-lbs | 2 Nm |
| Moment (My) | 17.7 in-lbs | 2 Nm |
| Moment (Mz) | 11.5 in-lbs | 1.3 Nm |

## Dimensional Information

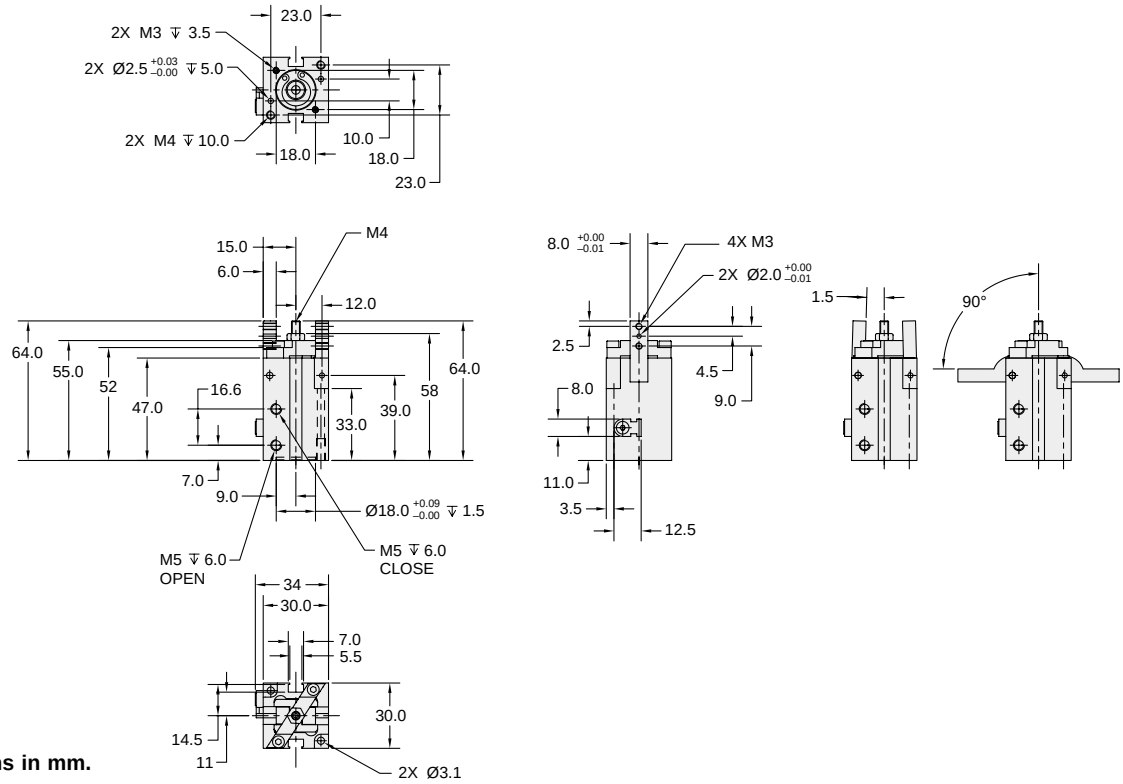


**Dimensions in mm.**



**Parker Hannifin Corporation**
Actuator Division
Wadsworth, Ohio USA

# P5G-RB2

| | | |
|---|---|---|
| Total Grip Force (0.7 Mpa @ 25 mm) | 45.6 lbs | 203 N |
| Total Stroke (Degree) | -3 to +180 | |
| Weight w/ square jaw carrier | 0.63 lbs | 0.29 kg |
| Bore Size | 0.984 in | 25 mm |
| Cylinder Volume | 0.71 $in^3$ | 11.7 $cm^3$ |
| Repeatability | ±0.003 in | ±0.1 mm |
| Temperature Range* | -4° to 158° F | -20° to 70° C |
| Pressure Range | 29-100 psi | 2-7 bar |
| Filtration Requirement | 40 micron (dry air) | |

* Fluorcarbon seals available for high temperature applications

***Note: See model code and ordering information page for complete part number selection.***

## Loading Information

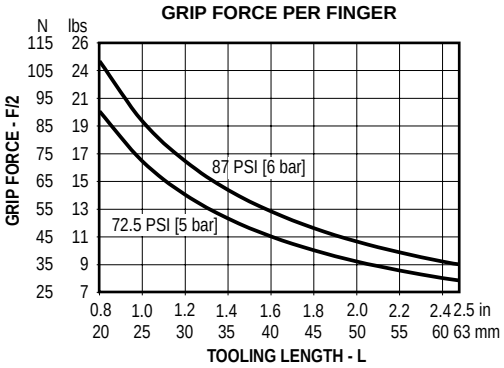


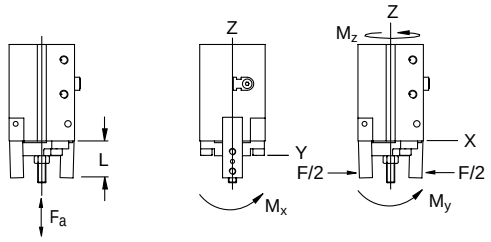


### Maximum Loading Capacity

| Load | Static | |
|---|---|---|
| Axial Forces (Fx) | 44.9 lbs | 200 N |
| Moment (Mx) | 53.1 in-lbs | 6 Nm |
| Moment (My) | 53.1 in-lbs | 6 Nm |
| Moment (Mz) | 38.9 in-lbs | 4.4 Nm |

## Dimensional Information

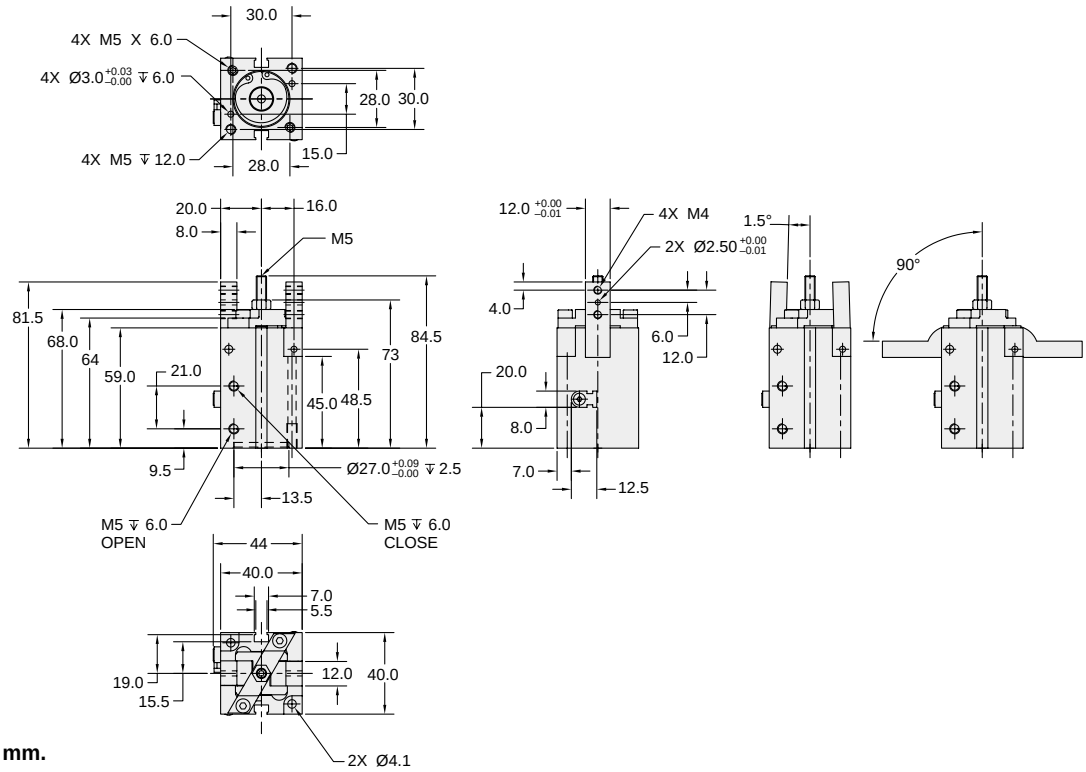


**Dimensions in mm.**





**Parker Hannifin Corporation**
Actuator Division
Wadsworth, Ohio USA

## P5G-RB3

| | | |
|---|---|---|
| Total Grip Force (0.7 Mpa @ 25 mm) | 142 lbs | 632.2 N |
| Total Stroke (Degree) | -3 to +180 | |
| Weight w/ square jaw carrier | 1.43 lbs | 0.65 kg |
| Bore Size | 1.57 in | 40 mm |
| Cylinder Volume | 2.2 $in^3$ | 36.1 $cm^3$ |
| Repeatability | ±0.003 in | ±0.1 mm |
| Temperature Range* | -4° to 158° F | -20° to 70° C |
| Pressure Range | 29-100 psi | 2-7 bar |
| Filtration Requirement | 40 micron (dry air) | |

* Fluorcarbon seals available for high temperature applications

***Note: See model code and ordering information page for complete part number selection.***

## Loading Information

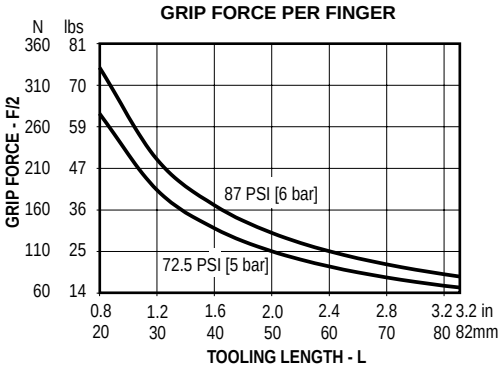


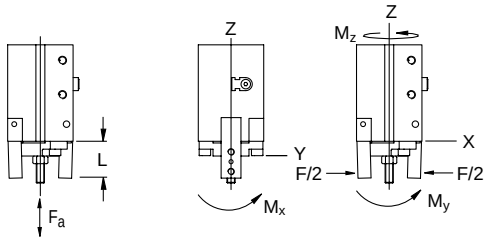


### Maximum Loading Capacity

| Load | Static | |
|---|---|---|
| Axial Forces (Fx) | 71.9 lbs | 320 N |
| Moment (Mx) | 159.3 in-lbs | 18 Nm |
| Moment (My) | 159.3 in-lbs | 18 Nm |
| Moment (Mz) | 146 in-lbs | 16.5 Nm |

## Dimensional Information

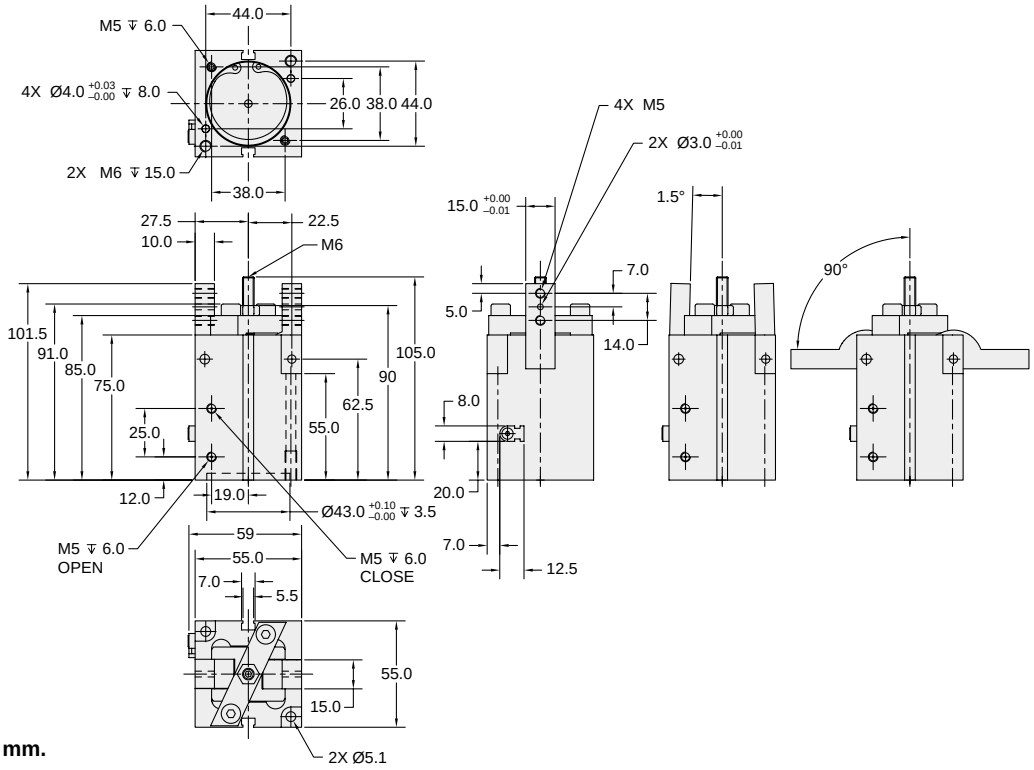


**Dimensions in mm.**



**Parker Hannifin Corporation**
Actuator Division
Wadsworth, Ohio USA

## Dust Cover (K)

A dust cover can be added to prevent machining chip contaminants from entering the working mechanism of the gripper. This dust cover is also ideal for dusty and dirty environments

## Reed and Hall Effect Sensors

Reed or Hall effect sensors mount in the sensor mounting grooves located in the gripper body. A magnetic piston is standard for ease of field addition of sensors.

## Model Code and Ordering Information

| P5G | – | R | B | 1 | 3 | R | K | 00 | 180 |
|---|---|---|---|---|---|---|---|---|---|

**Type**
P5G – Pneumatic Gripper

**Series**
R – Robotic

**Jaw Style**
B – Long Jaws (Standard)

**Size**
1 – 16mm Bore
2 – 25mm Bore
3 – 40mm Bore

**Flow Controls**
3 – Flow Controls (Standard)

**Operation**
R – Double Acting (Standard)

**Dust Cover**
M – No Dust Cover (Standard)
K – Dust Cover

**Function**
00 – Standard

**Angle**
180 – Standard

## Seal Kits

| Size | Nitrile Seal Kit |
|---|---|
| P5G-RB1 | PSK-P5G-RB1 |
| P5G-RB2 | PSK-P5G-RB2 |
| P5G-RB3 | PSK-P5G-RB3 |



**Parker Hannifin Corporation**
Actuator Division
Wadsworth, Ohio USA

# Contents

Reed Switches

Hall Effect Sensors

Proximity Sensors

Cordsets





**Parker Hannifin Corporation**
Actuator Division
Wadsworth, Ohio USA

This selection guide is a model number quick reference for the ordering of sensors as spare parts or for field installation. Switches/sensors are available only for the series listed.

Detailed specifications and part numbers for sensors and mounting brackets are given by series beginning on page 208. Look for the series name in the gray bars above each section.

Cordsets are sold separately on page 217.

## Hall Effect Sensors

Hall Effect sensors are available only for the series listed below.

### Parallel Grippers

| | | PNP | | | | NPN | | | |
|---|---|---|---|---|---|---|---|---|---|
| **Series** | **Sensor Type/ Gripper Size** | **Quick Connect** | **1m Flying Leads** | **3m Flying Leads** | **10m Flying Leads** | **Quick Connect** | **1m Flying Leads** | **3m Flying Leads** | **10m Flying Leads** |
| GPCR | Flush Mount<br>Right Angle | | ZE135A<br>ZE235A | ZE135B<br>ZE235B | | | | | |
| GPT | | SWH-2PC | SWH-2P | | | SWH-2NC | SWH-2N | | |
| P5G-RH | | P8S-SPTHXD | | P8S-SPELXD | P8S-SPETXD | P8S-TNSHX | | | P8S-SNETX |
| P5G-AP | Flush Mount<br>Right Angle | P8S-TPSHX<br>P8S-SPTHXD | | P8S-TPFLX<br>P8S-SPELXD | P8S-TPFTX<br>P8S-SPETXD | P8S-TNSHX<br>P8S-SNTHX | | P8S-TNFLX<br>P8S-SNELX | P8S-TNFTX<br>P8S-SNETX |
| GPEL | Flush Mount<br>Right Angle | | ZE135A<br>ZE235A | ZE135B<br>ZE235B | | | | | |
| GPDL | Flush Mount<br>Right Angle | | ZE135A<br>ZE235A | ZE135B<br>ZE235B | | | | | |
| GPK | Flush Mount<br>Right Angle | | ZE135A<br>ZE235A | ZE135B<br>ZE235B | | | | | |
| P5G-HPL | | P8S-HHSP-006 | | | | P8S-HHSN-006 | | | |
| P5G-HPC | Sizes 315-331<br>Sizes 344-368 | P8S-HHSP-008<br>P8S-HHSP-006 | | | | P8S-HHSN-008<br>P8S-HHSP-006 | | | |

* 6 meter cable length
** 1 meter cable length
*** 3 meter cable length

### Angular Grippers

| | | PNP | | | | NPN | | | |
|---|---|---|---|---|---|---|---|---|---|
| **Series** | **Sensor Type/ Gripper Size** | **Quick Connect** | **1m Flying Leads** | **3m Flying Leads** | **10m Flying Leads** | **Quick Connect** | **1m Flying Leads** | **3m Flying Leads** | **10m Flying Leads** |
| GVC | Flush Mount<br>Right Angle | | ZE135A<br>ZE235A | | | | | | |
| GAA | | SWH-2PC | SWH-2P | | | SWH-2NC | SWH-2N | | |
| P5G-AA | Flush Mount<br>Right Angle | P8S-TPSHX<br>P8S-SPTHXD | | P8S-TPFLX<br>P8S-SPELXD | P8S-TPFTX<br>P8S-SPETXD | P8S-TNSHX<br>P8S-SNTHX | | P8S-TNFLX<br>P8S-SNELX | P8S-TNFTX<br>P8S-SNETX |
| P5G-RK | Right Angle | P8S-SPTHXD | | P8S-SPELXD | P8S-SPETXD | P8S-TNSHX | | | P8S-SNETX |
| P5G-HA | Cam<br>(except<br>size 10) | P8S-HHSP-008 | | | | P8S-HHSN-008 | | | |
| GVH | Flush Mount<br>Right Angle | | ZE135A<br>ZE235A | | | | | | |
| GAW | | SWH-2PC | SWH-2P | | | SWH-2NC | SWH-2N | | |
| P5G-AW | Flush Mount<br>Right Angle | P8S-TPSHX<br>P8S-SPTHXD | | P8S-TPFLX<br>P8S-SPELXD | P8S-TPFTX<br>P8S-SPETXD | P8S-TNSHX<br>P8S-SNTHX | | P8S-TNFLX<br>P8S-SNELX | P8S-TNFTX<br>P8S-SNETX |
| P5G-RB | Right Angle | P8S-SPTHXD | | P8S-SPELXD | P8S-SPETXD | P8S-TNSHX | | | P8S-SNETX |

## Reed Switches

Reed switches are available only for the series listed below.

| Series | Sensor Type | Quick Connect | 1m Flying Leads | 3m Flying Leads | 10m Flying Leads |
|---|---|---|---|---|---|
| GPT | | SWR-2C | SWR-2 | | |
| P5G-A* | Flush Mount<br>Right Angle | P8S-TRSHX<br>P8S-SRTHX | | P8S-TRFLX<br>P8S-SRELX | P8S-TRFTX<br>P8S-SRETX |
| P5G-R* | | P8S-SRTHX | | P8S-SRELX | P8S-SRETX |
| GAA | | SWR-2C | SWR-2 | | |
| GAW | | SWR-2C | SWR-2 | | |

*All types – parallel, 30° and 180° angular

## Proximity Sensors

Proximity sensors are available only for the series listed below.

### Parallel Grippers

| Series | Sensor Type/ Gripper Size | PNP | | | NPN | | | |
|---|---|---|---|---|---|---|---|---|
| | | Threaded Connector | 6m Flying Leads | Plug-in 5m Cable | Threaded Connector | Plug-in 5m Cable | 1m Flying Leads | 6m Flying Leads |
| GPR | Left (Grey)<br>Right (Black) | | | | | | PA8FI<br>PA8F | |
| P5G-HP | Sizes 5-15<br>Sizes 17-30 | P8S-HISP-013<br>P8S-HISP-011 | | | P8S-HISN-013<br>P8S-HISN-011 | | | |
| GPT | | SWP-1P | | | SWP-1N | | | |
| P5G-AP | | | B8769-P* | B8769-N* | | 9878006* | | B8769-N* |
| P5G-HP-P | | P8S-HISP-014 | | | P8S-HISN-014 | | | |
| P5G-HPW | Sizes 250-500<br>Sizes 625-750 | P8S-HISP-014<br>P8S-HISP-011 | | | P8S-HISN-014<br>P8S-HISN-011 | | | |
| P5G-HPB | | P8S-HISP-017 | | | P8S-HISN-017 | | | |

* Cable included to achieve overall length

### Angular Grippers

| Series | Sensor Type/ Gripper Size | PNP | | | NPN | | | |
|---|---|---|---|---|---|---|---|---|
| | | Threaded Connector | 6m Flying Leads | Plug-in 5m Cable | Threaded Connector | Plug-in 5m Cable | 1m Flying Leads | 6m Flying Leads |
| GAA | | SWP-1P | | | SWP-1N | | | |
| P5G-AA | | | B8769-P* | B8769-N* | | 9878006* | | B8769-N* |
| P5G-HA | Locking (Size 15)<br>Locking (Size 25) | P8S-HISP-013<br>P8S-HISP-014 | | | P8S-HISN-013<br>P8S-HISN-014 | | | |
| 3H2 | Right Angle | 9878034 | | | 9878035 | | | |
| GAW | | SWP-1P | | | SWP-1N | | | |
| P5G-AW | | | B8769-P* | B8769-N* | | 9878006* | | B8769-N* |

* Cable included to achieve overall length



**Parker Hannifin Corporation**
Actuator Division
Wadsworth, Ohio USA

## For Use with GA/GP Series

### Specifications

| | |
|---|---|
| Switching Logic: | Normally Open, SPST |
| Voltage Rating: | 85-125 VAC or 6-30 VDC* |
| Power Rating: | 10 Watts AC or DC/Resistive Load<br>5 Watts AC or DC/Inductive Load |
| Switching Current Range: | 30-200 mA/Resistive Load<br>(PC, Sequencer)<br>30-100 mA/Inductive Load (Relay) |
| Switching Frequency: | 300 Hz Maximum |
| Breakdown Voltage: | 1.8kVACrms for 1 sec., lead to case |
| Min. Current for LED: | 18mA |
| Operating Temperature: | 14 to 140°F (-10 to 60°C) |
| Enclosure Protection: | Meets IEC IP67, fully encapsulated |
| Lead Wire: | 2 conductor, 22 Gauge |
| Lead Wire Length: | 39 in (1 m) |
| Vibration Resistance: | 10-55 Hz, 1.5mm double amplitude |

* Polarity is restricted for DC operation
(+) to brown
(-) to blue
If these connections are reversed, the contacts will close but the LED will not light.

### Switch Part Numbers

| Part Number | Connection |
|---|---|
| SWR-2C | 6 inch quick connect |
| SWR-2 | 39 inch flying leads |

**PROTECTION CIRCUIT (INDUCTIVE LOADS)**

(Required for proper operation 24VDC)

Select a diode with a breakdown voltage and current rating according to the load. Place a diode in parallel to the load with the polarity as indicated:

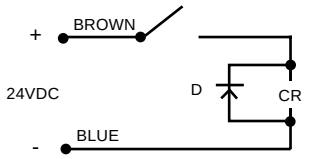


CR: Relay coil (under 0.5W coil rating)

(Recommended for longer switch life 125VAC)

Select a resistor and capacitor according to the load. Place a resistor and capacitor in parallel to the load:

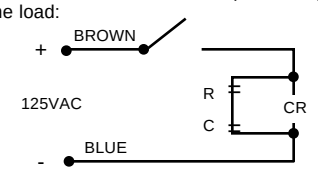


CR: Relay coil (under 2W coil rating)

R: Resistor under 1 K ohm

C: Capacitor 0.1 µF

## For Use with P5G-A, P5G-R Series

### Specifications

| | |
|---|---|
| Type | Reed |
| Output Function | Normally Open |
| Operating Voltage | 10 - 120 VAC<br>10 - 30 VDC |
| Continuous Current | ≤100 mA |
| Response Sensitivity | 3 mT |
| Switching Frequency | 400 Hz |
| Voltage Drop | ≤3 V |
| Ripple | ≤10% of Operating Voltage |
| Delay Time (24V) | Approx. 20 ms |
| Time Delay before Availability | ≤2 ms |
| Hysteresis | ≤1.0 mm |
| Repeatability | ≤0.2 mm |
| EMC | EN 60 947-5-2 |
| Reverse Polarity Protection | Yes |
| Enclosure Rating | IP 67 |
| Shock and Vibration Stress | 30g, 11 ms, 10 to 55 Hz, 1 mm |
| Ambient Temperature Range | -25° to +75°C (-13° to 167°F) |
| Housing Material | PA 12, Black |
| Connector Cable | PVC |
| Connector | PUR cable with 8 mm connector |

⚠ *Contact suppression is strongly recommended for reed switch applications with inductive loads (solenoids) or cable lengths in excess of 5 m (16.4 ft).*

*Reed switches exhibit a 3V voltage drop. This voltage drop will be cumulative for switches in series, eg. 12 V for 4 switches.*

***Note:*** *It is not necessary to order switches separately for the P5G-A or P5G-R Series grippers. Consult model code page for each series.*

**WIRING CONNECTION**

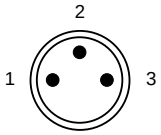


| Pin | Wire | Function |
|---|---|---|
| 1 | Brown | 10-30 VDC |
| 2 | Black | Output signal |
| 3 | Blue | Not Used |

### Flush Mount Part Numbers

| Part Number | Connection |
|---|---|
| P8S-TRSHX | .27m lead w/connector |
| P8S-TRFLX | 3m flying leads |
| P8S-TRFTX | 10m flying leads |

### Right Angle Part Numbers

| Part Number | Connection |
|---|---|
| P8S-SRTHX | .27m lead w/connector |
| P8S-SRELX | 3m flying leads |
| P8S-SRETX | 10m flying leads |



**Parker Hannifin Corporation**
Actuator Division
Wadsworth, Ohio USA

## For Use with GA/GP Series

### Specifications

Type ..... Solid State (PNP or NPN)
Switching Logic ..... Normally Open
Supply Voltage Range ..... 6 - 30VDC
Current Output Range ..... Up to100 mA at 5 VDC,
Up to 200 mA at 12 VDC and 24 VDC
Current Consumption ..... 7 mA at 5 VDC, 15 mA at 12 VDC,
and 30 mA at 24 VDC
Switching Frequency ..... 1000 Hz Maximum
Residual Voltage ..... 1.5V Maximum
Leakage Current ..... 10uA Maximum
Breakdown Voltage ..... 1.8kVACrms for 1 sec., lead to case
Min. Current for LED ..... 1mA
Operating Temperature ..... 14 to 140°F (-10 to 60°C)
Enclosure Protection ..... Meets IEC IP67, fully encapsulated
Lead Wire ..... 3 conductor, 24 gauge
Lead Wire Length ..... 39 in (1 m)
Vibration Resistance ..... 10-55 Hz, 1.5mm double amplitude

### Sensor Part Numbers

| Part Number | Function | Connection |
|---|---|---|
| SWH-2PC | PNP | 6 inch male quick connect |
| SWH-2P | PNP | 39 inch flying leads |
| SWH-2NC | NPN | 6 inch male quick connect |
| SWH-2N | NPN | 39 inch flying leads |

**Note:** Sensors with male quick connect option require female cordsets. Order separately from page 217.

### WIRING CONNECTION

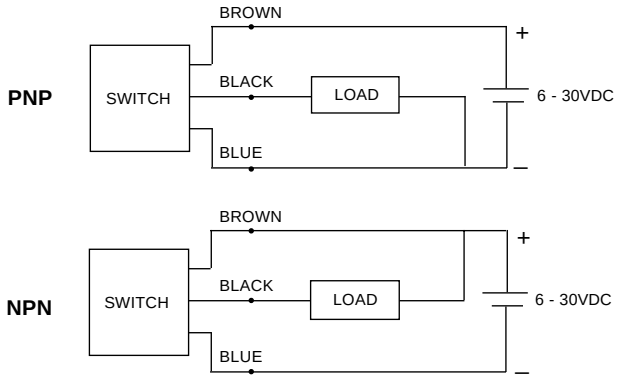


### PROTECTION CIRCUIT*

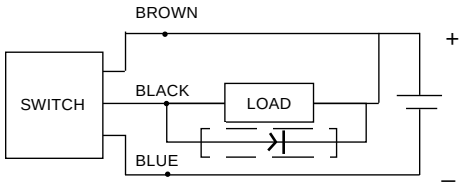


* When connecting an inductive load (relay, solenoid valve, etc.), a protection circuit is recommended. Use a 100V, 1A diode. (NPN connection shown.)

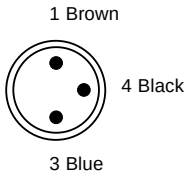


## For Use with GPCR, GPDL, GPEL, GPK, GVC and GVH Series

### Specifications

Load Voltage ..... DC 10-28V
Load Current ..... 4-20 mA
Internal Voltage Drop ..... 4.5V max.
Leak Current ..... 1 mA max. (DC24V)
Mean Response Time ..... less than 1 ms
Insulation Resistance ..... min. 1000 MO at 500 VDC
(end part of case, lead wire)
Withstand Voltage ..... 500VAC (50/60 Hz) 1 min
(end part of case, lead wire)
Shock Resistance ..... 294.2 m/s$^2$
Vibration Resistance ..... double amplitude 1.5mm, 10-55 Hz
Temperature Range ..... -10° to 60°C (no freezing allowed)
Wiring Method ..... PCCV 0.2mm2, 3 wire OD 2.6mm
Protection Grade ..... IP67, JIS C0920
Indicator Lamp ..... red LED (turn on at "ON")
Connection Type ..... Flying leads

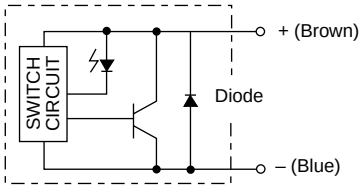


### Sensor Part Numbers

| Part Number | Wire Direction | Connection |
|---|---|---|
| ZE135A | Horizontal | 1m lead wire |
| ZE235A | Vertical | 1m lead wire |
| ZE135B | Horizontal | 3m lead wire |
| ZE235B | Vertical | 3m lead wire |



**Parker Hannifin Corporation**
Actuator Division
Wadsworth, Ohio USA

## For Use with P5G-A, P5G-R Series

### Specifications

Type ..... Electronic
Output Function ..... Normally Open
Switching Output ..... PNP/NPN
Operating Voltage ..... 10 - 30VDC
Continuous Current ..... ≤150 mA
Response Sensitivity ..... 3 mT
Switching Frequency ..... 5 kHz
Power Consumption ..... 15 mA
Voltage Drop ..... ≤2 V
Ripple ..... ≤10% of Operating Voltage
Time Delay before Availability ..... ≤2 ms
Hysteresis ..... ≤1.5 mm
Repeatability ..... ≤0.2 mm
EMC ..... EN 60 947-5-2
Short -circuit Protection ..... Yes
Power-up Pulse Supression ..... Yes
Reverse Polarity Protection ..... Yes
Enclosure Rating ..... IP 67
Shock and Vibration Stress ..... 30g, 11 ms, 10 to 55 Hz, 1 mm
Ambient Temperature Range ..... -25° to +75°C (-13° to 167°F)
Housing Material ..... PA 12, Black
Connector Cable ..... PVC
Connector ..... PUR cable with 8 mm connector

**WIRING CONNECTION**

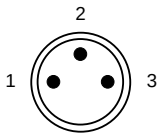


| Pin | Wire | Function |
|---|---|---|
| 1 | Brown | 10-30 VDC |
| 2 | Black | Output signal |
| 3 | Blue | 0V |

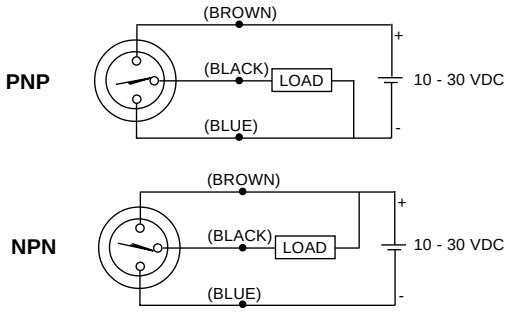


### Right Angle Part Numbers

| Part Number | Function | Connection |
|---|---|---|
| P8S-SPTHXD | PNP | .27m lead w/connector |
| P8S-SPELXD | PNP | 3m flying leads |
| P8S-SPETXD | PNP | 10m flying leads |
| P8S-SNTHX | NPN | .27m lead w/connector |
| P8S-SNELX | NPN | 3m flying leads |
| P8S-SNETX | NPN | 10m flying leads |

### Flush Mount Part Numbers

| Part Number | Function | Connection |
|---|---|---|
| P8S-TPSHX | PNP | .27m lead w/connector |
| P8S-TPFLX | PNP | 3m flying leads |
| P8S-TPFTX | PNP | 10m flying leads |
| P8S-TNSHX | NPN | .27m lead w/connector |
| P8S-TNFLX | NPN | 3m flying leads |
| P8S-TNFTX | NPN | 10m flying leads |

***Note:*** *It is not necessary to order sensors separately for the P5G-A or P5G-R Series grippers. Consult model code page for each series.*



**Parker Hannifin Corporation**
Actuator Division
Wadsworth, Ohio USA

## For Use with HPC Series (Sizes 315-331) and 30° P5G-HA Series

### Specifications

Switching Logic ..... Normally Open, Normally Closed
Voltage Rating ..... 4.5 - 30 VDC
Current Consumption ..... 26 mA @ 24V
Max. Switching Current ..... 200 mA
Voltage Drop ..... 1.5 V
Operating Temperature Range ..... 14 to 158°F
Enclosure Protection ..... IP67
Connection Type ..... Flying leads
Lead Wire Length ..... 6.0 inches

### Sensor Part Numbers

Order sensor and cable separately. Mounting kit not required.

| Description | Part Number |
|---|---|
| NPN Sensor with Quick Disconnect | P8S-HHSN-008 |
| PNP Sensor with Quick Disconnect | P8S-HHSP-008 |

**WIRING CONNECTION**

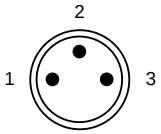


| Pin | Wire | Function |
|---|---|---|
| 1 | Brown | 10-30 VDC |
| 2 | Black | Output signal |
| 3 | Blue | 0V |

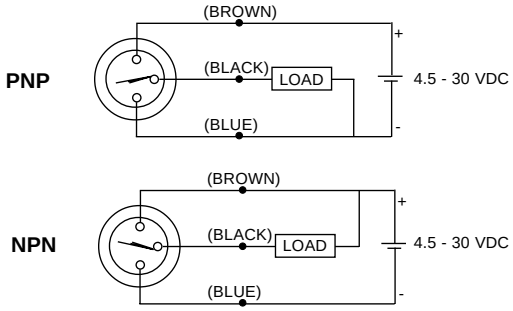


## For Use with P5G-HPL Series

### Specifications

Switching Logic ..... Normally Open, Normally Closed
Voltage Rating ..... 4.5 - 30 VDC
Current Consumption ..... 7 mA @ 24V
Max. Switching Current ..... 50 mA
Voltage Drop ..... 0.5 V max.
Response Frequency ..... 1 kHz
Operating Temperature Range ..... 14 to 158°F
Enclosure Protection ..... IP67
Connection Type ..... Flying leads
Lead Wire Length ..... 200mm

### Sensor Part Numbers

Order sensor, cable and mounting kit separately.

| Description | Part Number |
|---|---|
| NPN Sensor with Quick Disconnect | P8S-HHSN-006 |
| PNP Sensor with Quick Disconnect | P8S-HHSP-006 |

### Sensor Mounting Kits

| Size | Sensor Mounting Hardware Kit |
|---|---|
| P5G-HPL-1 | P5G-HSMK-008 |
| P5G-HPL-2 | P5G-HSMK-008 |
| P5G-HPL-3 | P5G-HSMK-008 |
| P5G-HPL-4 | P5G-HSMK-008 |

**WIRING CONNECTION**

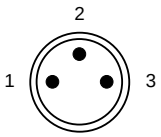


| Pin | Wire | Function |
|---|---|---|
| 1 | Brown | 10-30 VDC |
| 2 | Black | Output signal |
| 3 | Blue | 0V |

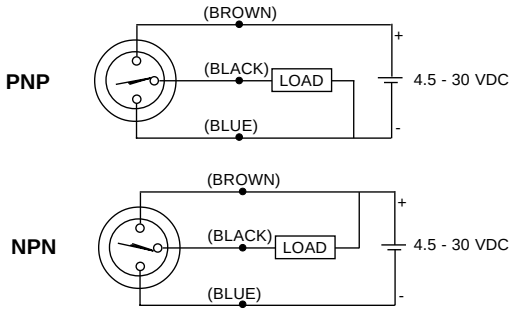




**Parker Hannifin Corporation**
Actuator Division
Wadsworth, Ohio USA

## For Use with GA and GP Series

### Electrical Specifications

Voltage ..... 10-30 VDC (3 wire) PNP or NPN
Current ..... 7mA at 24 VDC
Outlet Current ..... 130mA
Switching Speed ..... 1000Hz
Switching Distance ..... Steel = 1.0 mm (0.039 in)
Brass = 0.7 mm (0.028 in)
Aluminum = 0.4 mm (0.016 in)
Overload Protection ..... Triggered at 170mA
Reverse Polarity Protection ..... Incorporated
Temp. Range ..... -13 to 158°F (-25 to 70°C)
Enclosure ..... Meets NEMA 1,3,4,6,13 and IEC IP67, fully encapsulated

**PNP WIRING CONNECTION**

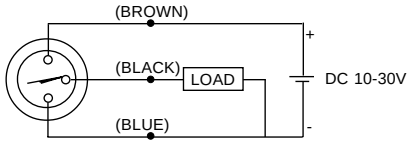


**NPN WIRING CONNECTION**

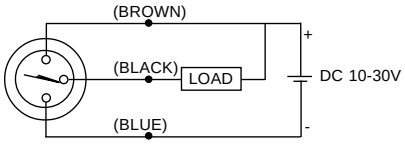


### Sensor Part Numbers

| Part Number | Description |
|---|---|
| SWP-1P | PNP with threaded connector |
| SWP-1N | NPN with threaded connector |

**PLUG-IN SENSOR**

A threaded right angle cordset is included as standard. The cordset contains two LEDs: 1- power, 2 - target indication. Cordset length is 20 ft. (6m).

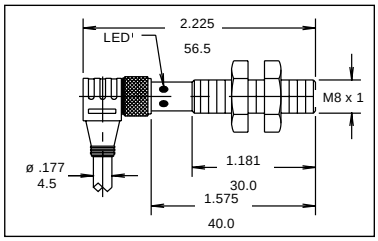


## For Use with GPR Series

### Specifications

Application ..... Relay, PLC, IC Circuit
Type of Contact ..... NPN transistor, Open Collector
Power Consumption ..... 15 mA Max
Switch Current ..... 100 mA Max
Load Voltage ..... 12 to 24 VDC ± 10%
(Ripple p-p, less than 10%)
Internal Voltage drop ..... less than 1 V at 100 mA input
Leak Current ..... 5 µA Max
Mean Response Time ..... 1 msec
Temperature Range ..... -10 to 55° C
Protection Grade ..... IP67
Indicator Lamp ..... Red LED (turn on at "ON")
Lead wire length ..... 1 meter

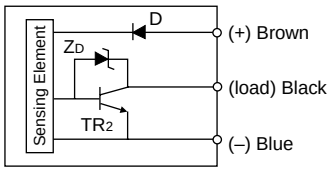


D = Diode for reverse polarity
$Z_D$ = Zenor diode for surge suppression
$TR_2$ = NPN Transistor

### Sensor Part Numbers
(as spare parts)

| Part Number | Description |
|---|---|
| PB8F | Black |
| PB8FI | Gray |

### Sensor & Mounting Kit Part Numbers
(includes sensor and mounting hardware)

| Size | Part Number |
|---|---|
| GPR1 | PA1GP2 |
| GPR3 | PA3GP2 |
| GPR10 | PA10GP2 |



**Parker Hannifin Corporation**
Actuator Division
Wadsworth, Ohio USA

## For Use with P5G-A Series

### Electrical Specifications

Voltage ..... 10-30 VDC (3 wire)
PNP or NPN
Current ..... 7mA at 24 VDC
Outlet Current ..... 130mA
Switching Speed ..... 1000Hz
Switching Distance ..... Steel = 1.0 mm (0.039 in)
Brass = 0.7 mm (0.028 in)
Aluminum = 0.4 mm (0.016 in)
Overload Protection ..... Triggered at 170mA
Reverse Polarity Protection ..... Incorporated
Temp. Range ..... -25° to 70ºC (-13° to 158°F)
Enclosure ..... Meets NEMA 1,3,4,6,13
and IEC IP67, fully encapsulated

**PNP WIRING CONNECTION**

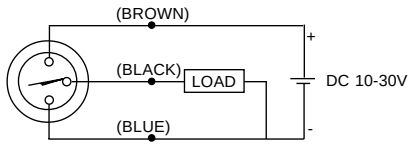


**NPN WIRING CONNECTION**

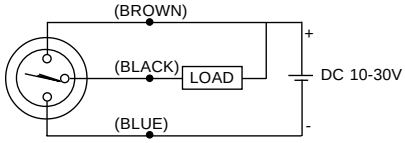


**PLUG-IN SENSOR**

A threaded right angle cordset is included as standard. The cordset contains two LEDs: 1-power, 2 - target indication. Cordset length is 20 ft. (6m).

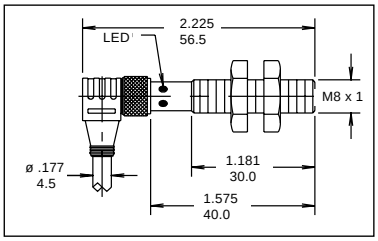


**POTTED-IN SENSOR**

Lead type sensor with 20 ft. (6m) cord length

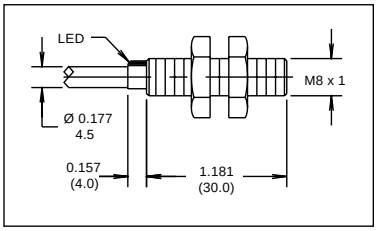


***Note:*** *It is not necessary to order proximity sensors separately for the P5G-A grippers. Consult model code pages to order with gripper.*

## For Use with P5G-HPB Series

### Electrical Specifications

Switching Logic ..... Normally Open,
Normally Closed
Voltage Rating ..... 9 - 30 VDC
Current Consumption ..... 15 mA Max
Load Current ..... 200 mA Max
Voltage Drop ..... 1.6 V
Operating Temerature Range ..... -13 to 176° F
Enclosure Protection ..... IP67
Response Frequency ..... 2 kHz
Sensing Range ..... 2.0 mm
NEMA Rating ..... 6

**WIRING CONNECTION**

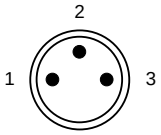


| Pin | Wire | Function |
|---|---|---|
| 1 | Brown | 10-30 VDC |
| 2 | Black | Output signal |
| 3 | Blue | 0V |

**PNP**

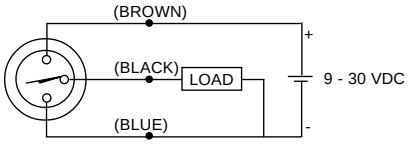


**NPN**

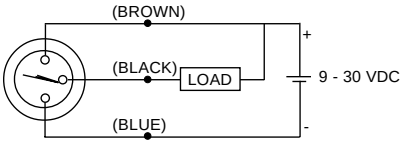


### Sensors and Mounting Kits

Order sensor, cable and mounting kit separately.

| Description | Part Number |
|---|---|
| 12mm NPN Sensor with Quick Disconnect | P8S-HISN-017 |
| 12mm PNP Sensor with Quick Disconnect | P8S-HISP-017 |
| Sensor Mounting Kit | P5G-HSMK-078 |

## For Use with P5G-HA-15 and P5G-HP Series (Sizes 5-15)

### Electrical Specifications

Switching Logic ..... Normally Open, Normally Closed
Voltage Rating ..... 5 - 24 VDC
Current Consumption ..... 10 mA Max
Load Current ..... 100 mA Max
Voltage Drop ..... 1.0 V
Operating Temerature Range ..... -13 to 158° F (-25 to 70ºC)
Enclosure Protection ..... IP64
Lead Wire Length ..... 6 inches
Response Frequency ..... 1 kHz
Sensing Range ..... 0.5 mm
NEMA Rating ..... 3

**WIRING CONNECTION**

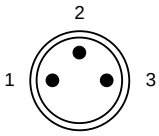


| Pin | Wire | Function |
|---|---|---|
| 1 | Brown | 10-30 VDC |
| 2 | Black | Output signal |
| 3 | Blue | 0V |

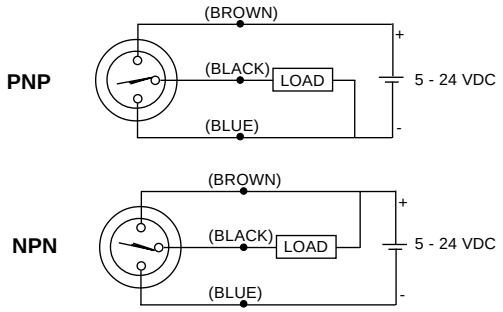


### Sensor Part Numbers

Order sensor, cable and mounting kit separately.

| Description | Part Number |
|---|---|
| NPN Sensor with Quick Disconnect | P8S-HISN-013 |
| PNP Sensor with Quick Disconnect | P8S-HISP-013 |

### P5G-HA-15 Sensor Mounting Kit

| Size | Sensor Mounting Hardware Only |
|---|---|
| P5G-HA-15 | P5G-HSMK-018 |

### P5G-HP Sensor Mounting Kits

| Size | Sensor Mounting Hardware Only |
|---|---|
| P5G-HP5 | P5G-HSMK-001 |
| P5G-HP10 | P5G-HSMK-002 |
| P5G-HPS11/11D | P5G-HSMK-003 |
| P5G-HPS12/12D | P5G-HSMK-003 |
| P5G-HPS15/15D | P5G-HSMK-003 |

## For Use with P5G-HP Series (Sizes 17-19) and P5G-HPW Series (Sizes 625-750)

### Electrical Specifications

Switching Logic ..... Normally Open, Normally Closed
Voltage Rating ..... 5-30 VDC
Current Consumption ..... 15 mA Max
Load Current ..... 200 mA Max
Voltage Drop ..... 1 V Max
Operating Temerature Range ..... -13 to 135° F (-25 to 70ºC)
Enclosure Protection ..... IP67
Lead Wire Length ..... 200 mm
Response Frequency ..... 800-1000 Hz
Sensing Range ..... 1.5 mm
NEMA Rating ..... 6

**WIRING CONNECTION**

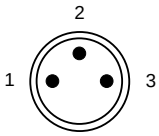


| Pin | Wire | Function |
|---|---|---|
| 1 | Brown | 10-30 VDC |
| 2 | Black | Output signal |
| 3 | Blue | 0V |

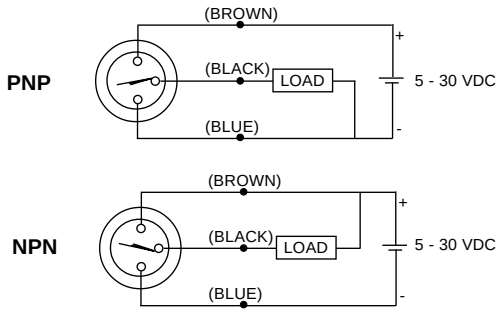


### Sensor Part Numbers

Order sensor, cable and mounting kit separately.

| Description | Part Number |
|---|---|
| NPN Sensor with Quick Disconnect | P8S-HISN-011 |
| PNP Sensor with Quick Disconnect | P8S-HISP-011 |

### P5G-HP Sensor Mounting Kits

| Model | Sensor Mounting Hardware Only |
|---|---|
| P5G-HPS17/17D | P5G-HSMK-072 |
| P5G-HPS18/18D | P5G-HSMK-072 |
| P5G-HPS19/19D | P5G-HSMK-073 |

### P5G-HPW Sensor Mounting Kits

| Model | Sensor Mounting Hardware Only |
|---|---|
| P5G-HPW-625-1 | P5G-HSMK-074 |
| P5G-HPW-625-2 | P5G-HSMK-074 |
| P5G-HPW-750 | P5G-HSMK-014 |

## For Use with P5G-HA-25, P5G-HP-P and P5G-HPW Series (Size 250-500)

### Electrical Specifications

| | |
|---|---|
| Switching Logic | Normally Open, Normally Closed |
| Voltage Rating | 10-30 VDC |
| Current Consumption | 18 mA Max |
| Load Current | 100 mA Max |
| Voltage Drop | 2.5 V Max |
| Operating Temerature Range | -13 to 167° F |
| Enclosure Protection | IP67 |
| Lead Wire Length | 200 mm |
| Response Frequency | 2.0-3.0 kHz |
| Sensing Range | 0.8 mm |
| NEMA Rating | 6 |

**WIRING CONNECTION**

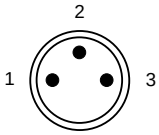


| Pin | Wire | Function |
|---|---|---|
| 1 | Brown | 10-30 VDC |
| 2 | Black | Output signal |
| 3 | Blue | 0V |

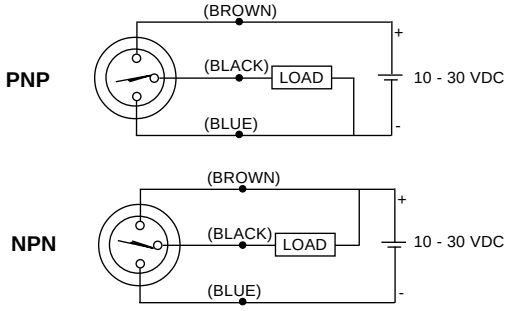


### Sensor Part Numbers

Order sensor, cable and mounting kit separately.

| Description | Part Number |
|---|---|
| NPN Sensor with Quick Disconnect | P8S-HISN-014 |
| PNP Sensor with Quick Disconnect | P8S-HISP-014 |

### P5G-HA-25 Sensor Mounting Kit

| Size | Sensor Mounting Hardware Only |
|---|---|
| P5G-HA-25 | P5G-HSMK-019 |

### P5G-HP-P Sensor Mounting Kits

| Size | Sensor Mounting Hardware Only |
|---|---|
| P5G-HP-50P | P5G-HSMK-003 |
| P5G-HP-100P | P5G-HSMK-004 |
| P5G-HP-25P | P5G-HSMK-004 |
| P5G-HP-35P | P5G-HSMK-023 |
| P5G-HP-40P | P5G-HSMK-023 |
| P5G-HP-43P | P5G-HSMK-023 |

### P5G-HPW Sensor Mounting Kits

| Size | Sensor Mounting Hardware Only |
|---|---|
| P5G-HPW-250 | P5G-HSMK-009 |
| P5G-HPW-375-1 | P5G-HSMK-010 |
| P5G-HPW-375-2 | P5G-HSMK-011 |
| P5G-HPW-500-1 | P5G-HSMK-012 |
| P5G-HPW-500-2 | P5G-HSMK-013 |

# Cordset with Female Quick Connect
(order separately)

## Specifications

Connector ..... Oil resistant polyurethane body material, PA 6 (Nylon) contact carrier, spacings to VDE 0110 Group C, (30 VAC / 36 VDC)

Contacts ..... Gold plated beryllium copper, machined from solid stock

Coupling Method ..... Snap-Lock or chrome plated brass nut

Cord Construction ..... Oil resistant black PUR jacket, non-wicking, non-hygroscopic, 300V. Cable end is stripped and tinned.

Conductors ..... Extra high flex stranding, PVC insulation

Temperature ..... -40 to 90°C (-40 to 194°F)

Protection ..... NEMA 1,3,4,6P and IEC IP67

Cable Length ..... 6 m (20 ft)

## Part Numbers

A female connector is available for all Hall Effect and reed sensors with the male quick connect option. The male plug will accept a snap-on or threaded connector. Parker's cordset part numbers and other manufacturer's part numbers are listed below:

| Manufacturer | Threaded Connector | Snap-on Connector |
|---|---|---|
| Parker | B8786 | B8785 |
| Brad Harrison | 45310-102 | 45300-102 |
| Lumberg | RKMV3-G1/5m | RKM3-G1/5m |
| Hirschman | — | ELKA-K308PUR014 |
| Turck | PKG 3M-6/S90 | PKG 3-6/S90 |



**SNAP-ON**
**STRAIGHT PLUG**

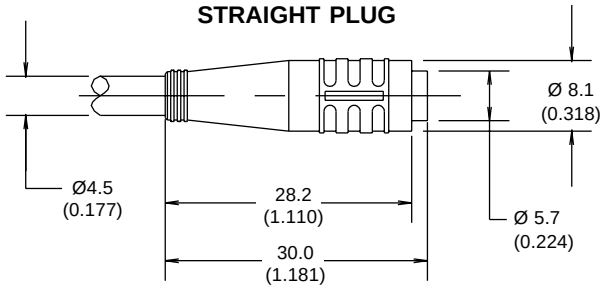


**THREADED**
**STRAIGHT PLUG**

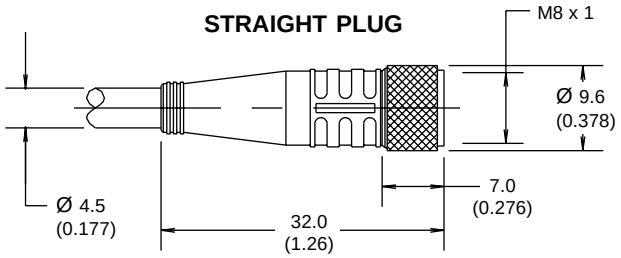

# Offer of Sale

The items described in this document and other documents or descriptions provided by Parker Hannifin Corporation, its subsidiaries and its authorized distributors are hereby offered for sale at prices to be established by Parker Hannifin Corporation, its subsidiaries and its authorized distributors. This offer and its acceptance by any customer ("Buyer") shall be governed by all of the following Terms and Conditions. Buyer's order for any such item, when communicated to Parker Hannifin Corporation, its subsidiary or an authorized distributor ("Seller") verbally or in writing, shall constitute acceptance of this offer.

**1. Terms and Conditions of Sale:** All descriptions, quotations, proposals, offers acknowledgments, acceptances and sales of Seller's products are subject to and shall be governed exclusively by the terms and conditions stated herein. Buyer's acceptance of any offer to sell is limited to these terms and conditions. Any terms or conditions in addition to, or inconsistent with those stated herein, proposed by Buyer in any acceptance of an offer by Seller, are hereby objected to. No such additional, different or inconsistent terms and conditions shall become part of the contract between, Buyer and Seller unless expressly accepted in writing by Seller. Seller's acceptance of any offer to purchase by Buyer is expressly conditional upon Buyer's assent to all the terms and conditions stated herein, including any terms in addition to, or inconsistent with those contained in Buyer's offer. Acceptance of Seller's products shall in all events constitute such assent.

**2. Payment:** Payment shall be made by Buyer net 30 days from the date of delivery of the items purchased hereunder. Amounts not timely paid shall bear interest at the maximum rate permitted by law for each month or portion thereof that the Buyer is late in making payment. Any claims by Buyer for omissions or shortages in a shipment shall be waived unless Seller receives notice thereof within 30 days after Buyer's receipt of the shipment.

**3. Delivery:** Unless otherwise provided on the face hereof, delivery shall be made F.O.B. Seller's plant. Regardless of the method of delivery, however, risk of loss shall pass to Buyer upon Seller's delivery to a carrier. Any delivery dates shown are approximate only and Seller shall have no liability for any delays in delivery.

**4. Warranty:** Seller warrants that the items sold hereunder shall be free from defects in material or workmanship for a period of 18 months from date of shipment from Parker Hannifin Corporation. **THIS WARRANTY COMPRISES THE SOLE AND ENTIRE WARRANTY PERTAINING TO ITEMS PROVIDED HEREUNDER. SELLER MAKES NO OTHER WARRANTY, GUARANTEE, OR REPRESENTATION OF ANY KIND WHATSOEVER. ALL OTHER WAR-RANTIES, INCLUDING BUT NOT LIMITED TO, MERCHANTABILITY AND FITNESS FOR PURPOSE, WHETHER EXPRESS, IMPLIED, OR ARISING BY OPERATION OF LAW, TRADE USAGE, OR COURSE OF DEALING ARE HEREBY DISCLAIMED.**

**NOTWITHSTANDING THE FOREGOING, THERE ARE NO WARRANTIES WHATSOEVER ON ITEMS BUILT OR ACQUIRED WHOLLY OR PARTIALLY, TO BUYER'S DESIGNS OR SPECIFICATIONS.**

**5. Limitation of Remedy:** SELLER'S LIABILITY ARISING FROM OR IN ANY WAY CONNECTED WITH THE ITEMS SOLD OR THIS CONTRACT SHALL BE LIMITED EXCLUSIVELY TO REPAIR OR REPLACEMENT OF THE ITEMS SOLD OR REFUND OF THE PURCHASE PRICE PAID BY BUYER, AT SELLER'S SOLE OPTION. IN NO EVENT SHALL SELLER BE LIABLE FOR ANY INCIDENTAL, CONSEQUENTIAL OR SPECIAL DAMAGES OF ANY KIND OR NATURE WHATSOEVER, INCLUDING BUT NOT LIMITED TO LOST PROFITS ARISING FROM OR IN ANY WAY CONNECTED WITH THIS AGREEMENT OR ITEMS SOLD HEREUNDER, WHETHER ALLEGED TO ARISE FORM BREACH OF CONTRACT, EXPRESS OR IMPLIED WARRANTY, OR IN TORT, INCLUDING WITHOUT LIMITATION, NEGLIGENCE, FAILURE TO WARN OR STRICT LIABILITY.

**6. Changes, Reschedules and Cancellations:** Buyers may request to modify the designs or specifications for the items sold hereunder as well as the quantities and delivery dates thereof, or may request to cancel all or part of this order, however, no such requested modification or cancellation shall become part of the contract between Buyer and Seller unless accepted by Seller in a written amendment to this Agreement. Acceptance of any such requested modification of cancellation shall be at Seller's discretion, and shall be upon such terms and conditions as Seller may require.

**7. Special Tooling:** A tooling charge may be imposed for any special tooling, including without limitation, dies, fixtures, molds and patterns, acquired to manufacture items sold pursuant to this contract. Such special tooling shall be and remain Seller's property notwithstanding payment of any charges by Buyer. In no event will Buyer acquire any interest in apparatus belonging to Seller which is utilized in the manufacture of the items sold hereunder, even if such apparatus has been specially converted or adapted for such manufacture and notwithstanding any charges paid by Buyer. Unless otherwise agreed, Seller shall have the right to alter, discard or otherwise dispose of any special tooling or other property in its sole discretion at any time.

**8. Buyer's Property:** Any designs, tools, patterns, materials, drawings confidential information or equipment furnished by Buyer, or any other items which become Buyer's property, may be considered obsolete and may be destroyed by Seller after two (2) consecutive years have elapsed without Buyer placing an order for the items which are manufactured using such property. Seller shall not be responsible for any loss or damage to such property while it is in Seller's possession or control.

**9. Taxes:** Unless otherwise indicated on the face hereof, all prices and charges are exclusive of excise, sales, use, property, occupational or like taxes which may be imposed by any taxing authority upon the manufacture, sale or delivery of the items sold hereunder. If any such taxes must be paid by Seller or if Seller is liable for the collection of such tax, the amount thereof shall be in addition to the amounts for the items sold. Buyer agrees to pay all such taxes or to reimburse Seller therefore upon receipt of its invoice. If Buyer claims exemption from any sales, use or other tax imposed by any taxing authority, Buyer shall save Seller harmless from and against any such tax, together with any interest or penalties thereon which may be assessed if the items are held to be taxable.

**10. Indemnity For Infringement of Intellectual Property Rights:** Seller shall have no liability for infringement of any patents, trademarks, copyrights, trade dress, trade secrets or similar rights except as provided in this Part 10. Seller will defend and indemnify Buyer against allegations of infringement of U.S. patents, U.S. trademarks, copyrights, trade dress and trade secrets (hereinafter 'Intellectual Property Rights'). Seller will defend at its expense and will pay the cost of any settlement or damages awarded in an action brought against Buyer based on an allegation that an item sold pursuant to this contract infringes the Intellectual Property Rights of a third party. Seller's obligation to defend and indemnify Buyer is contingent on Buyer notifying Seller within ten (10) days after Buyer becomes aware of such allegations of infringement, and Seller having sole control over the defense of any allegations or actions including all negotiations for settlement or compromise. If an item sold hereunder is subject to a claim that it infringes the Intellectual Property Rights of a third party, Seller may, at its sole expense and option, procure for Buyer the right to continue using said item, replace or modify said item so as to make it noninfringing, or offer to accept return of said item and return the purchase price less a reasonable allowance for depreciation. Notwithstanding the foregoing, Seller shall have no liability for claims of infringement based on information provided by Buyer, or directed to items delivered hereunder for which the designs are specified in whole or part by Buyer, or infringements resulting from the modification, combination or use in a system of any item sold hereunder. The foregoing provisions of this Part 10 shall constitute Seller's sole and exclusive liability and Buyer's sole and exclusive remedy for infringement of Intellectual Property Right.

If a claim is based on information provided by Buyer or if the design for an item delivered hereunder is specified in whole or in part by Buyer, Buyer shall defend and indemnify Seller for all costs, expenses or judgements resulting from any claim that such item infringes any patent, trademark, copyright, trade dress, trade secret or any similar right.

**11. Force Majeure:** Seller does not assume the risk of and shall not be liable for delay or failure to perform any of Seller's obligations by reason of circumstances beyond the reasonable control of Seller (hereinafter 'Events of Force Majeure'). Events of Force Majeure shall include without limitation, accidents, acts of God, strikes or labor disputes, acts, laws, rules or regulations of any government or government agency, fires, floods, delays or failures in delivery of carriers or suppliers, shortages of materials and any other cause beyond Seller's control.

**12. Entire Agreement/Governing Law:** The terms and conditions set forth herein, together with any amendments, modifications and any different terms or conditions expressly accepted by Seller in writing, shall constitute the entire Agreement concerning the items sold, and there are no oral or other representations or agreements which pertain thereto. This Agreement shall be governed in all respects by the law of the State of Ohio. No actions arising out of the sale of the items sold hereunder of this Agreement may be brought by either party more than two (2) years after the cause of action accrues.

Authorized Distributor

800-525-9085

www.mfcpinc.com

MFCP Motion & Flow Control Products, Inc.